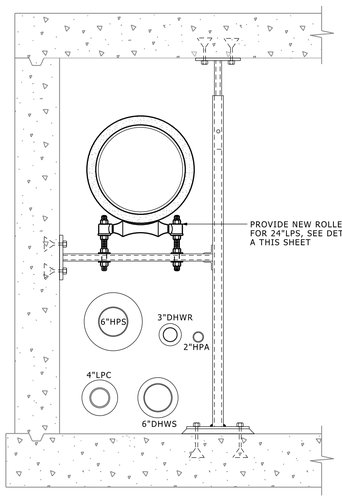

14" - 20" LPS & HPS TYPICAL ROLLER SECTION

SCALE: ⅜" = 1'-0"

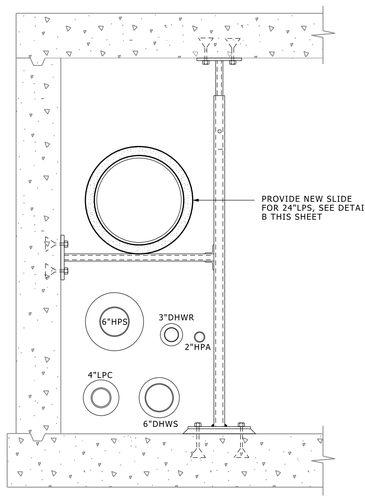

14" - 20" LPS & HPS TYPICAL SLIDE SECTION

SCALE: ⅜" = 1'-0"

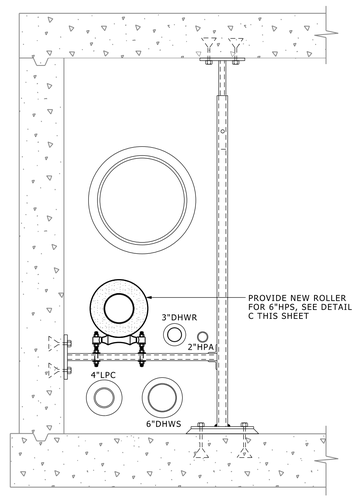

12" OR SMALLER PIPING TYPICAL ROLLER SECTION

SCALE: ⅜" = 1'-0"

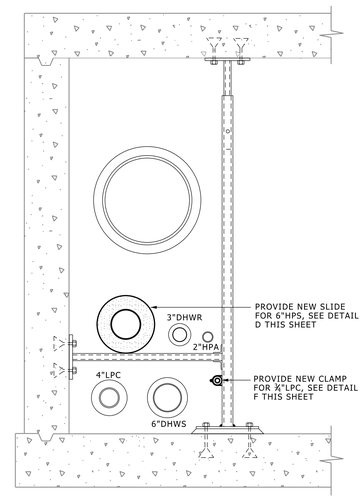

12" OR SMALLER PIPING TYPICAL SLIDE SECTION

SCALE: ⅜" = 1'-0"

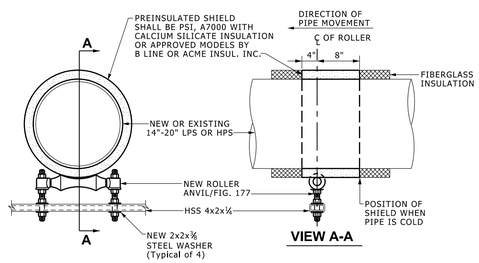

A LPS/HPS ROLLER DETAIL

NO SCALE

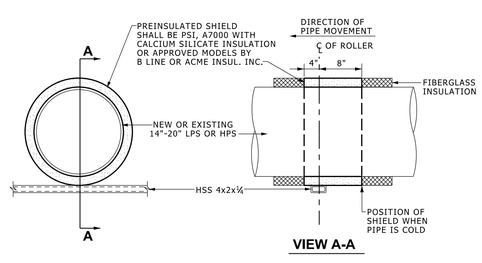

B LPS/HPS SLIDE DETAIL

NO SCALE

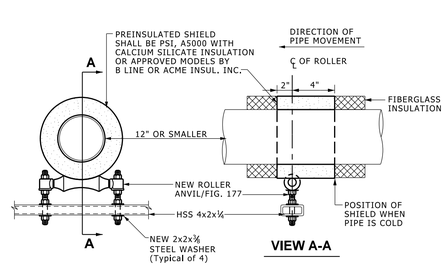

C 12" OR SMALLER ROLLER DETAIL

NO SCALE

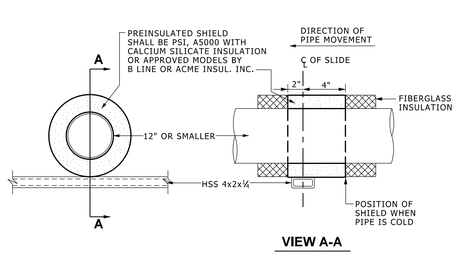

D 12" OR SMALLER SLIDE DETAIL

NO SCALE

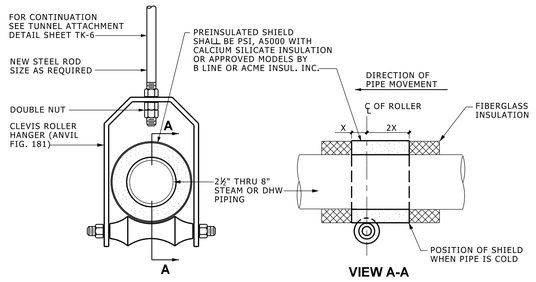

E ROLLER HANGER DETAIL

NO SCALE

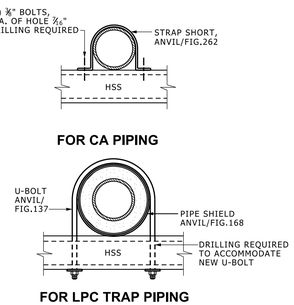

F CLAMP DETAILS

NO SCALE

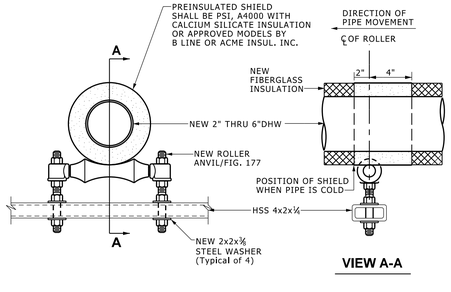

G DHW ROLLER DETAIL

NO SCALE

Note to Designers:

(1) PREFERRED STEEL SUPPORT DETAILS FOR EXISTING AND NEW TUNNELS ARE SHOWN IN THIS SHEET.

(2) DETAILS NOT INTENDED AS FINALIZED DESIGN. INTENT IS TO SHOW PREFERENCES IN CONSTRUCTION AND REQUIRED DEPTH OF DETAILS TO BE PROVIDED IN BID DOCUMENTS. DESIGN ENGINEER SHALL DETERMINE APPROPRIATE APPLICATION AND ADEQUACY.

NOTE:
THICKNESS OF ALL CALCIUM SILICATE INSULATION SHALL MATCH ADJACENT PIPING INSULATION.

ALL OF THE DETAILS SHOWN IN THIS SHEET WILL WORK FOR NEW TUNNELS WITH PROPER CROSSMEMBER PLACEMENT.

UNIVERSITY OF MICHIGAN
ARCHITECTURE, ENGINEERING AND CONSTRUCTION

ARCHITECTURE & ENGINEERING
326 East Hoover, Mail Stop B
Ann Arbor, MI 48109-1002
Phone: 734-764-3414
Fax: 734-936-3334

Tom Girard
U OF M DESIGN SUPERVISOR

APPROVED BY
AEC - Architecture & Engineering
REPRESENTING

AF/BB
DRAWN BY

WPG
PROJECT LEAD

CVW/VSM
DESIGNED BY

REVIEWED BY

MARK	ISSUED FOR/REVISIONS	DATE
•	New Master	• 03/20/15
•	Hydronics Group Revision	• 08/10/12
•	Hydronics Group Revision	• 10/04/07
•	New Master	• 06/28/07
•	Issued for Revision	• 06/22/07

Tunnels

Tool Kit

University Of Michigan
Ann Arbor , MI

UNIVERSITY OF MICHIGAN
ARCHITECTURE, ENGINEERING AND CONSTRUCTION
326 East Hoover, Mail Stop E
Ann Arbor, MI 48109-1002
Phone: 734-763-3020
Fax: 734-763-3238

P00009388
U OF M PROJECT NO.

9980
BUILDING NO.

SHEET TITLE: Tunnels

Typical Sections & Details of Rollers Slides and Clamps New Construction

SHEET NO.

TK-5

SHEET NO. 7 OF 13 SHEET FILE NO. TK-5 04 15.dgn

4/7/2015 9:24:45 AM bbegg G:\10009980 - Tunnels\Consultations\P00009388-Tunnel Technical Support FY15\Tunnel Toolkit\To Be Posted\TK-05 04 15.dgn