OUT TO BID

DESIGN GUIDELINES

1.0 CODES AND REGULATORY AGENCIES

2.0 PROJECT PROCEDURES

3.0 SUSTAINABILITY

4.0 SPECIAL INSTRUCTIONS TO DESIGNERS

5.0 SPECIAL BUILDING AREAS

6.0 TECHNICAL REQUIREMENTS

7.0 MASTER SPECIFICATIONS

8.0 PREFERRED MANUFACTURERS LIST

9.0 STANDARD DETAILS AND SCHEDULES

10.0 CHANGES TO DESIGN GUIDELINES

BUILDING COMMISSIONING

CONTRACTS & AGREEMENTS

DESIGN GUIDELINES

INTRODUCTION TO THE U-M DESIGN GUIDELINES

This web site contains Design Guidelines for the design and construction of facilities at the University of Michigan. The Design Guidelines are in effect throughout the duration of the project. The Design Guideline 2.7 Effective Date for guidelines, is set at the beginning of Design Development for a given project and shall be used for the preparation of construction documents for the project unless noted otherwise. The purpose of the Design Guidelines is to assure maximum quality and value in construction projects at the University of Michigan, through uniformity, system and component quality, compatibility, sustainability, functionality, and ease of maintenance. These Design Guidelines provide direction to design professionals for most circumstances. With the wide variety of facilities, varying life expectancies and program requirements, these Guidelines shall be specifically and correctly applied to each project by the design professional. These Design Guidelines do not replace professional design analyses, nor are they Contract Specifications. We expect the design professional to conduct independent evaluations for each project. Applications of proven technologies and systems to provide cost effective alternate design concepts are encouraged. The University recognizes that there will be times when deviations from these Design Guidelines may be appropriate on some projects, and in those instances, the design professional shall proactively and in writing, approach the University design manager for written approval to deviate from the Guidelines.

Throughout these documents reference is made to the A/Es contact with the University as the Design Manager. This title is defined as the Owner's Representative during the design and construction document phases.

Suggestions for improving these Design Guidelines should be addressed to UMDesignGuide@umich.edu in the Architecture, Engineering and Construction Department. Revisions will be issued on a periodic, as-needed basis.

These Design Guidelines are only for use by consultants in connection with work performed for the University of Michigan. They are to be used in the preparation of design documents for University of Michigan construction projects. They are not intended to relieve the designers from their responsibility to comply with applicable codes and other contract obligations.

© 2018 Regents of the University of Michigan
Design by Michigan Creative

326 East Hoover, Ann Arbor, MI 48109-1002
Phone: (734) 763-3020
Contact Us

OUT TO BID

DESIGN GUIDELINES

1.0 CODES AND REGULATORY AGENCIES

2.0 PROJECT PROCEDURES

3.0 SUSTAINABILITY

4.0 SPECIAL INSTRUCTIONS TO DESIGNERS

5.0 SPECIAL BUILDING AREAS

6.0 TECHNICAL REQUIREMENTS

7.0 MASTER SPECIFICATIONS

8.0 PREFERRED MANUFACTURERS LIST

9.0 STANDARD DETAILS AND SCHEDULES

10.0 CHANGES TO DESIGN GUIDELINES

BUILDING COMMISSIONING

CONTRACTS & AGREEMENTS

1.0 CODES AND REGULATORY AGENCIES

Codes and Regulatory Agencies (formerly SID-F Codes and Regulatory Agencies) is an annotated list of all applicable building codes and standards for the University of Michigan. Issued November 2, 2017.

© 2018 Regents of the University of Michigan
Design by Michigan Creative

326 East Hoover, Ann Arbor, MI 48109-1002
Phone: (734) 763-3020
Contact Us

CODES AND REGULATORY AGENCIES

Introduction

The University of Michigan is a State of Michigan constitutional corporation, governed by a Board of Regents elected by the People of the State of Michigan and has a great deal of regulatory autonomy. It is exempt from local building and zoning ordinances and subject to State of Michigan laws and regulations that are clearly intended to apply to universities. In lieu of local building ordinances and State of Michigan laws and regulations that do not apply at the University, the University chooses to require that new construction adhere to a number of well-established building codes and standards, as listed in this Section.

Regardless of origin or enforcing agency, all of the applicable building codes and standards listed and codes and standards referenced within the codes listed below are to be followed. Note, for instance, that compliance with the State of Michigan Bureau of Fire Safety rules for schools and/or dormitories does not eliminate the need to also comply with the Michigan Building Code, and that compliance with the 2010 Americans with Disabilities Act does not eliminate the need to comply with the barrier free provisions of the Michigan Building Code. Additional codes may apply for particular situations, such as for Medical Center construction; these are to be considered on the case-to-case basis. Many times adherence to narrow scope codes and/or standards is required by the general codes listed below.

New editions of building codes are published from time to time. For each project, the edition of building codes cited in this section form which the University of Michigan is listed as the "Enforcing Agency" is to be as follows:

The edition of building codes is to be as listed in this section as of the beginning of the design development phase of a project unless construction documents are submitted to the University for final review more than a year after adoption of the new version of the code. If more than one year has transpired between adoption of the new code and submission of construction documents to the University for final review, the edition of the building codes listed in this section as of submission of construction documents applies.

The University employs building inspectors, who are the authority having jurisdiction on all University property. Refer to each code diction for authority having jurisdiction contact information.

Table of Contents

Introduction **1**

Table of Contents **2**

Building Codes for University of Michigan **5**

Michigan Building Code 5

Michigan Residential Code 7

ADA Standards for Accessible Design 6

State of Michigan Health Care Safety Rules 7

State of Michigan Dormitory Fire Safety Rules for Schools, Colleges and Universities 8

State of Michigan Fire Safety Rules for Schools, Colleges and Universities 8

State of Michigan Human Services for Child Care in a Child Care Center 9

Michigan Rehabilitation Code for Existing Buildings 9

International Fire Code 9

State of Michigan Occupational Safety and Health Standards (MIOSHA) 9

State of Michigan Elevator Code 10

State of Michigan Mechanical Code 10

State of Michigan Plumbing Code 11

NFPA 13 –Sprinkler Systems. 11

State of Michigan Electrical Code 11

NFPA 72 – National Fire Alarm Code 12

Guide for the Care and Use of Laboratory Animals 12

State of Michigan Rules for Soil Erosion & Sedimentation Control 12

State of Michigan Issued NPDES Permit 13

State of Michigan Contaminated Soil and Groundwater 14

State of Michigan Leaking Underground Storage Tanks 14

State of Michigan Underground Storage Tanks (UST) 15

State of Michigan Aboveground Storage Tanks (AST) 15

Emergency Generators 16

Boilers 16

Chemical Storage 17

Building Standards for University of Michigan construction that are required for subsequent licensing of the facility 18

State of Michigan Department of Licensing and Regulatory Affairs, Division of Heath Facilities and Services 18

Biosafety in Microbiological and Biomedical Laboratories (BMBL) 18

Center for Medicare and Medicaid Services (CMS) 19

The Joint Commission Requirements for Accreditation of Health Care Facilities 19

State of Michigan Department of Licensing and Regulatory Affairs, Bureau of Health Systems, Radiation Safety Section ..... **Error! Bookmark not defined.**

ASHRAE / ASHE Standard 170-2013 "Ventilation of Health Care Facilities" 20

University of Michigan Leased Health Care Facilities 20

Toxic and/or Hazardous Materials at University of Michigan Health Care Facilities 20

Aviation, Pharmacy, Psychology, and Pathology, etc 20

State of Michigan Rules for Construction or Renovation of Food Service Facilities 20

State of Michigan Rules for Construction or Renovation of Swimming Pools 21

State of Michigan Department of Environmental Quality (MDEQ) 21

United States Environmental Protection Agency (USEPA) 22

Federal Aviation Administration (FAA) 22

University of Michigan Buildings That Contain Instructional Space 23

University of Michigan Buildings That Contain Instructional Space (Continued) 24

University of Michigan Buildings That Contain Instructional Space and Are Rental Properties 24

University of Michigan Buildings That Contain Dormitory Space 24

University of Michigan Buildings That Contain Child Care Space 25

University of Michigan Buildings That Are Inpatient & Health Care Facilities 25

University of Michigan Buildings That Contain Ambulatory Surgery Centers 25

University of Michigan Buildings That Contain Outpatient Dialysis 25

Building Codes for University of Michigan

Michigan Building Code 2015 (adopted April 20, 2017) promulgated by the State of Michigan Department of Licensing and Regulatory Affairs Bureau of Construction Codes. Including rule 408.30401 Rule 401 as printed on the interior cover of the Michigan Building Code.
By local rule, the following exceptions/modifications are applied to the Michigan Building Code article 717.5.3, article 907.5.2.3.3, and article 1010.1.9.11:

Article 717.5.3 add exception number 6:

Exception 6. In other than I or H occupancies or Michigan Medicine owned and/or occupied facilities, when equipped throughout with an automatic sprinkler system in accordance with Section 903.3.1.1, smoke dampers are not required at shaft enclosures unless specifically required by other sections of the code. Instead, provide smoke dampers at locations and to function as prescribed in the 2012 edition of NFPA 90A - 'Standard for the Installation of Air-Conditioning and Ventilating Systems'.

Article 907.5.2.3.3 Group R-2 reference the following interpretation of the use of the word "capability":

> In the sentence "all dwelling units and sleeping units shall be provided with the capability to support visible alarm notification appliances…". Capability of the fire alarm system shall be addressed by the spare capacity already required in all U of M fire alarm circuits and fire alarm panels. This spare capacity in the circuits (raceways, and installed conduit), shall be available immediately after the fire alarm system is commissioned. The spare capacity at the panel, may be in the form of power supplies sized for the expansion, and/or in the form of sufficient (spare) mounting space in the panel for the additionally needed power supplies. Refer to U of M Design Guideline and master specifications for spare capacity requirements.

Article 1010.1.9.11 add the following:

Exception 6. In existing buildings, selected doors on stair enclosures shall be permitted to be equipped with hardware that prevents reentry into the interior of the building, provided that egress is maintained and:

(a) There are at least two levels where it is possible to leave the stair enclosure; and
(b) There are not more than four stories intervening between stories where it is possible to leave the stair enclosure; and
(c) Reentry is possible on the top or next to top story permitting access to another exit; and
(d) Doors permitting reentry are identified as such on the stair side of the door; and
(e) Doors not permitting reentry shall be provided with a sign on the stair side indicating the location of the nearest door, in each direction of travel, permitting reentry or exit.
(f) Doors that prevent reentry from the stair must be capable of being unlocked simultaneously without unlatching upon a signal from the fire command center, if present, or a signal by emergency personnel from a single location inside the main entrance to the building.

Section 907.5.2.3 Visual Alarms.
Add Exception 4. In other than Group I occupancies and ambulatory care, visual alarms are not required in the following:

a) Offices less than 200 square feet.
b) Closets and coat rooms.
c) Electrical closets.
d) Mechanical pipe chases.
e) Crawl Spaces.
f) Small restrooms with access inside classrooms.
g) Custodial closets.
h) Storage rooms less than 200 square feet.
i) Unoccupied spaces.

Chapter 13 Energy Efficiency - Michigan Energy Code Part 10a rules incorporating the ASHRAE 90.1 2013 – Effective October 25, 2017

Chapter 32 Encroachments into the Public Right of Way: Within the public right of way adhere to City of Ann Arbor standards and specifications refer to the following web site for requirements:

http://www.a2gov.org/departments/engineering/Pages/Right-Of-Way-and-Lane-Closure-Permits.aspx

The following regulations take precedence over conflicting requirements in the Michigan Building Code:

Chapter 13 State of Michigan Part 10a Energy Code Efficiency incorporating ASHRAE Standard 90.1 2013 – Effective October 25, 2017. Refer to University Design Guidelines for additional requirements and items listed above.

State of Michigan Elevator Code.

State of Michigan Mechanical Code 2015 and Michigan Plumbing Code 2015.

State of Michigan Electrical Code incorporating "NFPA 70 --National Electrical Code", 2014 edition with University of Michigan modifications.

"NFPA 13 2013 -- Sprinkler Systems".

"NFPA 45 2011-- Fire Protection for Laboratories Using Chemicals".

"NFPA 72 -- National Fire Alarm Code", 2013 edition with University of Michigan modifications.

"Guide for Care and Use of Laboratory Animals" promulgated by US Department of Health & Human Services".

Enforcing Agency —
University of Michigan Architecture, Engineering and Construction.

Michigan Residential Code 2015 (adopted February 8, 2016) promulgated by the State of Michigan Department of Licensing and Regulatory Affairs Bureau of Construction Codes. Including rule 408.30500 Rule 500 as printed on the interior cover of the Michigan Building Code which includes ASHRAE 2013.

Enforcing Agency —
University of Michigan Architecture, Engineering and Construction.

ADA Standards for Accessible Design 2010 (adopted March 9, 2011) As required to comply with Section 504 of US Rehabilitation Act of 1973 Title II of Americans with Disabilities Act of 1990 and updated September 15, 2010. Also note that the University maintains a space-by-space database of non-compliance. Contact Architecture, Engineering and Construction for database information. Notice of corrections are to be reported to Architecture, Engineering and Construction for the purpose of updating the database.

State and local government facilities must follow the requirements of the 2010 Standards, including both the Title II regulations at 28 CFR 35.151; and the 2004 ADAAG at 36 CFR part 1191, appendices B and D. In the few places where requirements between the two differ, the requirements of 28 CFR 35.151 prevail.

Enforcing Agency —
All federal agencies (on complaint basis) for U.S. Rehabilitation Act of 1973, U.S. Department of Justice and Architectural and Transportation Barriers Compliance Board (on complaint basis) for Americans with Disabilities Act.

Web site for 2010 ADA: http://www.ADA.gov

State of Michigan Health Care Safety Rules, Bureau of Fire Services (BFS) ((Filed December 23, 2014) Effective February 3, 2015) promulgated by the State of Michigan Bureau of Fire Services (incorporating by reference NFPA 101 – Life Safety Code 2012) and all other codes and standards currently enforced there in. Note this requires by reference compliance with NFPA 99 Health Care Facilities Code 2012.

For assistance in determining which projects are subject to plan review and inspection, and BFS fire alarm and fire suppression shop drawing review and inspection, MM FPD has developed a flowchart available at BFS Flowchart. This flowchart has been reviewed by BFS, however it is not intended to replace professional judgment. Jurisdiction should be verified with BFS directly when it is not clear. Affirm decisions with MM Design Manager.

Enforcing Agency —
State of Michigan Department of Licensing and Regulatory Affairs
Bureau of Fire Services, Fire Safety Plan Review Division
525 W Allegan 4th Floor
Lansing, MI. 48913-0001

(517) 241-8847

Administrative rules web site: http://w3.lara.state.mi.us/orr/Files/AdminCode/1129_2012-120LR_AdminCode.pdf

Application forms under Bureau Fire Services:
http://www.michigan.gov/documents/dleg_bccfs_plrvwinsp_87149_7.pdf

State of Michigan Dormitory Fire Safety Rules for Schools, Colleges and Universities (Effective January 5, 2017) promulgated by the State of Michigan Bureau of Fire Services (incorporating by reference NFPA 101 – Life Safety Code 2012). Note that this standard applies only to fire compartments of buildings which contain dormitories. A listing of Ann Arbor campus buildings that contain dormitory space is included at the end of this section.

Enforcing Agency —
State of Michigan Department of Licensing and Regulatory Affairs
Bureau of Fire Services, Fire Safety Plan Review Division
525 W Allegan 4th Floor
Lansing, MI. 48913-0001
(517) 241-8847

Administrative rules web site: http://w3.lara.state.mi.us/orr/Files/AdminCode/965_2011-003LR_AdminCode.pdf

Application forms under Bureau Fire Services:
http://www.michigan.gov/documents/dleg_bccfs_plrvwinsp_87149_7.pdf

State of Michigan Fire Safety Rules for Schools, Colleges and Universities ((Filed May 19, 2016) Effective June 20, 2016) promulgated by the State of Michigan Bureau of Fire Services (incorporating by reference NFPA 101 – Life Safety Code 2012). Note that this standard applies only to fire compartments of buildings which contain instructional space (classrooms and/or instructional laboratories). A listing of Ann Arbor campus buildings that contain instructional space is included at the end of this section.

Enforcing Agency —
State of Michigan Department of Licensing and Regulatory Affairs
Bureau of Fire Services, Fire Safety Plan Review Division
525 W Allegan 4th Floor
Lansing, MI. 48913-0001
(517) 241-8847

Administrative rules web site: http://w3.lara.state.mi.us/orr/Files/AdminCode/964_2011-002LR_AdminCode.pdf

Application forms under Bureau of Fire Services:
http://www.michigan.gov/documents/dleg_bccfs_plrvwinsp_87149_7.pdf

State of Michigan Human Services for Child Care in a Child Care Center Promulgated by the State of Michigan Human Services. Note that this standard applies only to fire compartments of buildings which contain child care centers. A listing of Ann Arbor campus buildings that contain Child Care Centers is included at the end of this section.

Enforcing Agency —
State of Michigan Department of Human Services
PO Box 30759
Lansing, MI. 48909-8150
(517) 241-2488

Administrative rules:
http://michigan.gov/documents/dhs/Child_Care_Center_Rules_419095_7.pdf

State of Michigan Department of Licensing and Regulatory Affairs
Bureau of Fire Services, Child Care Section
PO Box 30700
Lansing, MI. 48909

Application form for Child Care Plan Review:
https://www.michigan.gov/documents/lara/BCHS-FS-13_10_15_fillable_Child_Section_Application_509689_7.pdf

Michigan Rehabilitation Code for Existing Buildings 2015 (adopted April 20, 2017) promulgated by the State of Michigan Department of Licensing and Regulatory Affairs Bureau of Construction Codes. Including Rule R408.30551 Rule 551 and R408.30552 Rule 552 as printed on the interior cover of the Michigan Rehabilitation Code for Existing Buildings.

Enforcing Agency —
University of Michigan Architecture, Engineering and Construction.

International Fire Code 2015 (adopted April 20, 2017) promulgated by the International Code Council and as referenced in the Michigan Building Code.

Enforcing Agency —
University of Michigan EHS Fire Marshal.
1239 Kipke Dr.
Ann Arbor, MI. 48109-1010
(734) 615-2718

State of Michigan Occupational Safety and Health Standards (MIOSHA) (Filed many different dates) Contact U of M Department of Environment, Health, and Safety for projects involving toxic and/or hazardous materials.

Contact UM Department of Environment, Health, and Safety (EHS) for projects affecting worker safety issues, such as work conditions resulting in exposure conditions to air contaminants, noise,

ergonomic hazards, blood borne pathogens, ionizing or nonionizing radiation, and potential for exposure to worker falls, electrical hazards, excavations.
Additional information is at web site: http://ehs.umich.edu/plans-guidelines/

Enforcing Agency —
Michigan Department of Licensing and Regulatory Affairs
Michigan Occupational Safety & Health Administration (MIOSHA)
530 W. Allegan Street
P.O. Box 30643
Lansing, MI 48909-8143
(800) 866-4674

Web Site: http://www.michigan.gov/lara/0,4601,7-154-11407_15368---,00.html

State of Michigan Elevator Code (2010 Edition)
(Effective July 11, 2014)
(Incorporating by reference the ASME A17.1 2010 Safety Code for Elevators and Escalators, the ASME A17.2 2012 Guide for Inspection of Elevators, Escalators, and Moving walks, the ASME A17.6-2010 Standard for Elevator Suspension, Compensation and Governor Systems, the ASME A17.7-2007- Performance-Based Safety Code for Elevators and Escalators, the ASME A18.1-2011 Safety Code Standard for Platform Lifts, and Stairway Chairlifts, and the ASME A90.1-2009 Safety Standard for Belt Manlifts.)

Enforcing Agency —
State of Michigan Department of Licensing and Regulatory Affairs
Bureau of Construction Codes
Elevator Safety Division
Calvin W. Rogler, Chief Elevator Inspector
PO Box 30254
Lansing, MI. 48909
(517) 241-9337

Refer to Design Guidelines for additional requirements on Elevators.

Web site for State of Michigan Elevator codes: http://www.michigan.gov/lara/0,4601,7-154-35299_10575_17394_17420---,00.html

State of Michigan Mechanical Code 2015 Part 9a Mechanical Code Rules (Adopted April 20, 2017) (incorporating International Mechanical Code 2015 and Michigan amendments) promulgated by State of Michigan Department of Licensing and Regulatory Affairs, Bureau of Construction Codes.

Enforcing Agency —
University of Michigan Architecture, Engineering and Construction.

Web site for Part 9a:
http://www.michigan.gov/documents/lara/lara_bcc_2015-025_LR_-__Final_Part_9a_Mechanical_Code_545957_7.pdf

State of Michigan Plumbing Code 2015 Part 7 Plumbing Code Rules (Adopted April 20, 2017) (Incorporating International Plumbing Code 2015 and Michigan amendments) promulgated by State of Michigan Department of Licensing and Regulatory Affairs, Bureau of Construction Codes.
By local rule the following modifications are applied to the Michigan Plumbing Code article 607.1:

607.1 (2) (h): A 1070 mixing valve is permitted to control up to 5 accessible plumbing fixtures within the same room, The 1070 mixing valve shall be certified for a minimum flow rate of 1/2 GPM or less.

Enforcing Agency —
University of Michigan Architecture, Engineering and Construction.

Web site for Part 7:
http://www.michigan.gov/documents/lara/lara_bcc_plumbing_code_rules_011714_440029_7.pdf

NFPA 13 –Sprinkler Systems (2013 Edition)
The 2010 edition of NFPA 13 is incorporated by reference in the edition of NFPA 101 incorporated by the current State of Michigan Bureau of Fire Services rules for Schools, Colleges, Hospitals, and Universities. The Bureau of Construction Codes and Fire Safety permits use of more current versions of NFPA 13 with some limitations. Contact the Bureau of Fire Services for specifics.

Enforcing Agency —
Project jurisdiction NFPA 101:
State of Michigan Department of Licensing and Regulatory Affairs
Bureau of Fire Services, Plan Review/Fire Safety
300 N. Washington Square
Lansing, MI. 48913
(517) 241-8847

Project jurisdiction MBC: University of Michigan Architecture, Engineering and Construction

State of Michigan Electrical Code 2014 Part 8 Electrical Code Rules (Adopted November 1, 2015) (Incorporating NFPA 70 – National Electrical Code (2014 Edition) and Michigan Amendments) promulgated by State of Michigan Department of Licensing and Regulatory Affairs, Bureau of Construction Codes.

By local rule the following exceptions/modifications are applied to the Michigan Electrical Code:

Michigan Electrical Code Article 80: Article 80 of the Michigan Electrical Code does not apply.

NEC 2014 Sections 700.28 and 701.27: The University may deviate from full selectivity (overcurrent protective device coordination within the emergency generator distribution system) in order to lower arc-flash energy levels for worker safety. All such deviations from full selectivity will be designed by, and reviewed by, registered professional engineers.

Enforcing Agency —
University of Michigan Architecture, Engineering and Construction.

Web site for Part 8:
http://www.michigan.gov/documents/lara/lara_bcc_electrical_2014_part_8_rules_492610_7.pdf

NFPA 72 – National Fire Alarm Code (2013 edition)
The 2010 edition of NFPA 72 is incorporated by reference in the edition of NFPA 101 incorporated by the current State of Michigan Bureau of Fire Services Administrative Rules for New and Existing School, College, and University Fire Safety and Dormitory Fire Safety. The Bureau of Fire Services allows the use of new versions of NFPA 72 with some limitations. Contact the Bureau of Fire Services for specifics

> **Enforcing Agency** —
> Project jurisdiction NFPA 101:
> State of Michigan Department of Licensing and Regulatory Affairs
> Bureau of Fire Services, Plan Review/Fire Safety
> 300 N. Washington Square
> Lansing, MI. 48913
> (517) 241-8847

By local rule, smoke and heat detectors are not required above suspended ceilings.

> **Enforcing Agency** —
> Project jurisdiction MBC: University of Michigan Architecture, Engineering and Construction

Guide for the Care and Use of Laboratory Animals 8th Edition 2011 (effective January 1, 2012) promulgated by United States Department of Health and Human Services. Regulations of the Federal Animal Welfare Act 9, CFR Parts 1, 2 and 3.

> **Enforcing Agency** —
> University of Michigan Unit for Laboratory Animal Medicine.
>
> University of Michigan Environment, Health & Safety.

Web site for the Guide for the Care and Use of Laboratory Animals 8th edition 2011:
http://grants.nih.gov/grants/olaw/Guide-for-the-Care-and-Use-of-Laboratory-Animals.pdf

Web site for Federal Animal Welfare Act 9 CFR:
Parts 1, 2, and 3: https://www.nal.usda.gov/awic/final-rules-animal-welfare-9-cfr-parts-1-2-and-3

Refer to "Animal Facilities Design Criteria and Special Requirements" contained in The University of Michigan Design Guidelines.

State of Michigan Rules for Soil Erosion & Sedimentation Control Promulgated by the State of Michigan Department of Environmental Quality (MDEQ) Soil Erosion and Sedimentation Control Part 91 of Public Acts 451 of 1994 as amended. The University of Michigan Environment, Health, and Safety (EHS) department is approved by the MDEQ as an 'Authorized Public Agency' to enforce the soil erosion and sedimentation control on University of Michigan property. Refer to University of

Michigan Design Guidelines Section 31 - Soil Erosion and Sedimentation Control for additional requirements.

Enforcing Agency —
University of Michigan EHS
Environmental Protection and Permitting Program (EP3)
1239 Kipke Dr.
Ann Arbor, MI. 48109-1010
(734) 936-1920

Corresponding web site—
Soil Erosion and Sedimentation Control: http://ehs.umich.edu/construction-projects/environmental-considerations/erosion-management/

State of Michigan Issued NPDES Permit
In compliance with the provisions of the Federal Water Pollution Control Act, as amended (33 U.S.C. 1251 et seq; the "Federal Act"), Michigan Act 451, Public Acts of 1994, as amended (the "Michigan Act"), Parts 31 and 41, and Michigan Executive Orders 1991-31, 1995-4 and 1995-18, The University of Michigan (U-M) is authorized to discharge storm water from the municipal separate storm sewer system (MS4) operated by the U-M in various locations in Michigan, and is designated as an MS4 in accordance with the conditions set forth in U-M's National Pollutant Discharge Elimination System (NPDES) permit with the State of Michigan, Department of Environmental Quality (MDEQ).

Per the NPDES permit, projects that disturb greater than one acre of land must meet certain post-construction storm water management requirements. Contact EHS EP3 as soon as possible, at the beginning of a project, to discuss this requirement.

Please note that the City of Ann Arbor may also require post-construction storm water management, above what is required by the U-M's NPDES permit, including areas disturbing less than 1 acre. This will be between the City and the Project, with input and coordination from EHS and the U-M Planner.

Coordinating Agency—
University of Michigan EHS
Environmental Protection and Permitting Program (EP3)
1239 Kipke Dr.
Ann Arbor, MI. 48109-1010
(734) 936-1920

Corresponding Guideline —
Stormwater Management – Post-Construction Requirements:
http://ehs.umich.edu/construction-projects/environmental-considerations/storm-water-management/

Enforcing Agency—
Michigan Department of Environmental Quality
Jackson State Office Building
301 E. Louis Glick Highway
4th Floor, Jackson, MI 49201
517-780-7929

MDEQ Web Site: http://www.michigan.gov/deq/0,4561,7-135-3313_3682_3716---,00.html

State of Michigan Contaminated Soil and Groundwater
In compliance with Michigan Public Act 451, Part 201 (Environmental Remediation) owners/operators of properties where soil or groundwater is present above Part 201 Generic Residential Criteria have due care requirements. Due Care requirements include undertaking measures, as necessary, to prevent exacerbation of existing contamination, undertaking response activities to mitigate unacceptable exposures to contamination, taking reasonable precautions against the reasonably foreseeable acts or omissions of a third party, complying with any land use or resource use restrictions, and not impeding with the effectiveness or integrity of such restrictions.

Contact EHS EP3 as soon as possible, at the beginning of a project, to discuss any known contamination, recommended assessments, scheduling, compliance requirements, and budget development to evaluate possible contamination or manage known contamination.

Coordinating Agency—
University of Michigan EHS
Environmental Protection and Permitting Program (EP3)
1239 Kipke Dr.
Ann Arbor, MI. 48109-1010
(734) 936-1920

Enforcing Agency—

Michigan Department of Environmental Quality
Remediation and Redevelopment Division
P.O. Box 30426
Lansing, MI 48909-7926
517-335-6843

MDEQ Web Site: http://www.michigan.gov/deq/0,4561,7-135-3311_4109---,00.html

State of Michigan Leaking Underground Storage Tanks
In compliance with Michigan Public Act 451, Part 213 (Leaking Underground Storage Tanks) owners/operators of underground storage tanks have requirements during the removal of underground storage tank systems to evaluate if a release to the environment has occurred. Tank removal contractors are typically obtained and managed by U-M EHS.

Contact EHS EP3 as soon as possible at the beginning of a project to discuss any tank removals, recommended assessments, scheduling, compliance requirements, and budget development.

Coordinating Agency—
University of Michigan EHS
Environmental Protection and Permitting Program (EP3)
1239 Kipke Dr.
Ann Arbor, MI. 48109-1010
(734) 936-1920

Enforcing Agency—
Michigan Department of Environmental Quality
Remediation and Redevelopment Division
P.O. Box 30033
Lansing, MI 48909
(517) 332-1428

MDEQ Web Site: http://www.michigan.gov/deq/0,1607,7-135-3311_4109_4215---,00.html

State of Michigan Underground Storage Tanks (UST)
(Permitting only, commissioning by AEC) In compliance with Michigan Public Act 451, Part 211 (Underground Storage Tank Rules), Michigan Underground Storage Tank Rules, and/or Storage and Handling of Flammable and Combustible Liquids Rules the owners/operators of underground ground storage tanks have requirements for the design, construction, installation, maintenance, and removal of tank systems.

Contact EHS EP3 as soon as possible at the beginning of a project to discuss tank plans, scheduling, compliance requirements, and budget development.

Coordinating Agency—
University of Michigan EHS
Environmental Protection and Permitting Program (EP3)
1239 Kipke Dr.
Ann Arbor, MI. 48109-1010
(734) 936-1920

Enforcing Agency—
Michigan Department of Licensing and Regulatory Affairs
Bureau of Fire Services
Storage Tank Division
P.O. Box 30033
Lansing, MI 48909
(517) 332-1428

MDEQ Web Site: http://www.michigan.gov/lara/0,4601,7-154-35299_42271_4115_4238---,00.html

State of Michigan Aboveground Storage Tanks (AST)
(Permitting only, commissioning by AEC) In compliance with Michigan Public Act 207, Parts 2 through 5 of the rules the Aboveground Storage Tank (AST) Program regulates the following:

- storage and handling of flammable and combustible liquids with flash point less than 200 degrees Fahrenheit.
- storage and handling of liquefied petroleum gases
- compressed natural gas vehicular systems

The regulatory authority is from the Fire Prevention Code, 1941 PA 207, as amended.
Contact EHS EP3 as soon as possible at the beginning of a project to discuss tank plans, scheduling, compliance requirements, and budget development.

Coordinating Agency—
University of Michigan EHS
Environmental Protection and Permitting Program (EP3)
1239 Kipke Dr.
Ann Arbor, MI. 48109-1010
(734) 936-1920

Enforcing Agency—
Michigan Department of Licensing and Regulatory Affairs
Bureau of Fire Services
Storage Tank Division
P.O. Box 30033
Lansing, MI 48909
(517) 332-1428

Michigan AST Web Site http://www.michigan.gov/lara/0,4601,7-154-35299_42271_4115_4237---,00.html

Emergency Generators
(Permitting only, commissioning by AEC) Pending on size, fuel usage, status, reciprocating internal combustion engines are regulated per the Environmental Protection Agency and MDEQ. There are design requirements, potential permit requirements, maintenance/ recordkeeping requirements and initial notification that need to be met and submitted within 120 days of startup.

Contact EHS EP3 as soon as possible at the beginning of a project to discuss plans, scheduling, compliance requirements, and budget development.

Coordinating Agency—
University of Michigan EHS
Environmental Protection and Permitting Program (EP3)
1239 Kipke Dr.
Ann Arbor, MI. 48109-1010
(734) 936-1920

Enforcing Agencies—
Michigan Department of Environmental Quality
Air Quality Division
525 West Allegan Street
Lansing, MI 48909
Environmental Protection Agency
Air and Radiation Division
Chicago, IL

MDEQ Website (RICE): http://www.michigan.gov/deq/0,4561,7-135-3310_70310_70317-254013--,00.html

Boilers
(Air permitting only, commissioning by AEC) Pending on size, fuel usage, status, boilers are regulated per the Environmental Protection Agency and MDEQ. There are design requirements,

potential permit requirements, maintenance/ recordkeeping requirements and initial notifications that need to be met and submitted within 15 days of startup.
Contact EHS EP3 as soon as possible at the beginning of the project to discuss plans, schedules, and compliance requirements.

Coordinating Agency—
University of Michigan EHS
Environmental Protection and Permitting Program (EP3)
1239 Kipke Dr.
Ann Arbor, MI. 48109-1010
(734) 936-1920

Enforcing Agencies—
Michigan Department of Environmental Quality
Air Quality Division
525 West Allegan Street
Lansing, MI 48909

MDEQ Website: http://www.michigan.gov/deq/0,4561,7-135-3304-159354--,00.html

Environmental Protection Agency
Air and Radiation Division
Chicago, IL

EPA Boiler Website: https://www.epa.gov/boilers

Chemical Storage
Per the MI Part 5 Rules, Spillage of Oil and Polluting Materials, 1994 PA 451, R 324.2001 to R 324.2009, requires secondary containment and Pollution Incident Prevention Plan if bulk salt, chemical, or oil storage exceeds the threshold management quantity.
Contact EHS EP3 as soon as possible at the beginning of a project to discuss plans, scheduling, compliance requirements, and budget development.

Coordinating Agency—
University of Michigan EHS
Environmental Protection and Permitting Program (EP3)
1239 Kipke Dr.
Ann Arbor, MI. 48109-1010
(734) 936-1920

Enforcing Agencies—
Michigan Department of Environmental Quality
Water Bureau
Jackson District Office
301 E. Louis Glick Highway
Jackson, MI 49201

MDEQ Website: http://www.michigan.gov/deq/0,4561,7-135-3313_23420---,00.html

Building Standards for University of Michigan construction that are required for subsequent licensing of the facility

State of Michigan Department of Licensing and Regulatory Affairs, Division of Heath Facilities and Services
The Health Facilities Engineering Section (HFES) 2007 Minimum Design Standards for Health Care Facilities in Michigan and all referenced codes and standards as listed within these rules, including but not limited to NFPA 99, NFPA 101, and other NFPA and ASHRAE standards. This document is posted at
www.michigan.gov/documents/mdch/bhs_2007_Minimum_Design_Standards_Final_PDF_Doc._198958_7.pdf

All areas used by inpatients, and all areas within state jurisdiction, are to be designed to comply with HFES regulations. In general, all areas used by outpatients that fall outside HFES jurisdiction are to be designed to comply with HFES regulations. Any areas of noncompliance should be reviewed and approved by the Michigan Medicine (MM) Design Manager.

HFES is the AHJ over all Inpatient Health Care Occupancies (defined as "Health Care Facilities" by NFPA and "I-2" by MBC. Further they are the AHJ over some "Ambulatory Health Care" Occupancies, including Outpatient Surgery and Outpatient Dialysis. The occupancy classification of "Ambulatory Health Care" needs to be carefully reviewed with the MM Design Manager. Not all AHC occupancies are subject state and federal regulatory authorities.

For assistance in determining which projects are subject to HFES plan review and inspection, MM has developed a flowchart available on the MM FPD website at HFES Flowchart. This flowchart has been reviewed by HFES, however it is not intended to replace professional judgment. Jurisdiction should be verified with HFES directly when it is not clear. Affirm decisions with the MM Design Manager.

Enforcing Agency—
Michigan Department of Licensing and Regulatory Affairs
Health Facilities Division, Health Facilities Engineering Section
Ottawa Building – 1st Floor
611 W. Ottawa Street
Lansing, MI 48933
Office #: 517-241-3408

HFES Website: http://www.michigan.gov/hfes

Biosafety in Microbiological and Biomedical Laboratories (BMBL)
An advisory document recommending best practices for the safe conduct of work in biomedical and clinical laboratories from a biosafety perspective. It is used for building design standards, grant, and contract requirements for laboratories that handle infectious microorganisms and hazardous biological materials or animals. Each biosafety laboratory must, at a minimum, meet the requirements for laboratory facilities as stated in the BMBL.

Coordinating Agency—
University of Michigan EHS
Biosafety
1239 Kipke Dr.

Ann Arbor, MI 48109-1010
(734) 647-3133

Coordinating Agency—
Center for Disease Control and Prevention
1600 Clifton Road
Atlanta, GA 30329-4027
(800)232-4636

Web Site: https://www.cdc.gov/biosafety/publications/bmbl5/BMBL.pdf

Center for Medicare and Medicaid Services (CMS)
As defined at http://www.cms.gov/. Compliance with NFPA 101, Life Safety Code, currently enforced version (2012 as of July 5, 2016) is required.

CMS is a federal agency that administers Medicare, works with states on Medicaid. It surveys and certifies Health Care facilities and labs for reimbursement, including Outpatient Surgery and Outpatient Dialysis. CMS also issues Survey and Certification memos and clarifications, including "Categorical Waivers" that the facility may choose to adopt. CMS requires facilities built before 2016 to comply with "Existing Health Care" and "Existing Ambulatory Health Care" chapters of NFPA 101. Facilities built after 2016 and all renovations are to comply with "New Health Care" and "New Ambulatory Health Care."

The Joint Commission Requirements for Accreditation of Health Care Facilities
As defined at http://www.jointcommission.org/. The Joint Commission (TJC) is the largest and most recognized accreditation organization that the state and CMS recognize for licensure and reimbursement. TJC surveys to the codes adopted by CMS and has established requirements based on CMS standards. MM Accreditation staff may participate in design reviews of MM clinical projects to ensure compliance with TJC and CMS requirements.

State of Michigan Department of Licensing and Regulatory Affairs, MIOSHA--Radiation Safety Section / United States Nuclear Regulatory Commission" All projects which include ionizing radiation-producing equipment or devices used for clinical or research use. All electronic equipment producing ionizing radiation must be registered with the Michigan Department of Licensing and Regulatory Affairs through EHS/Radiation Safety Service prior to initial use. Irradiators or other similar devices using or producing radioactive materials for clinical or research use will require licensing by the U.S. Nuclear Regulatory Commission in advance. Approvals for registration or licensing may also require submitting shielding construction plans for prior approval by MIOSHA--Radiation Safety Section or the U.S. Nuclear Regulatory Commission depending on the type of equipment used and nature of the facility. Contact UM EHS / Radiation Safety Service for assessment.

Enforcing Agency—
Radiation Safety Section
Michigan Occupational Safety and Health Administration (MIOSHA)
Michigan Department of Licensing and Regulatory Affairs
525 W. Allegan Street
P.O. Box 30643
Lansing, Michigan 48933

Phone: (517) 284-7820

Website: http://www.michigan.gov/lara/0,4601,7-154-11407_35791---,00.html

ASHRAE / ASHE Standard 170-2013 "Ventilation of Health Care Facilities"
Compliance with ASHRAE/ASHE Standard 170-2013 is required for all facilities which contain patient areas, including non-patient areas within the same building.

University of Michigan Leased Health Care Facilities
MM leases many facilities which are subject to local municipal jurisdiction, in addition to MM Design Guidelines and Preferred Manufacturer's List (PML). For more information on ownership status and physical addresses for all buildings, please consult with the MM Design Manager.

Website: http://www.med.umich.edu/facilities/plan/vn/index.html

Toxic and/or Hazardous Materials at University of Michigan Health Care Facilities
Contact MM Safety Management Services for projects involving toxic and / or hazardous materials.

Coordinating Agency —
Michigan House
2301 Commonwealth Blvd Floor 2
SPC 2945
Ann Arbor, MI 48105
(734) 764-4427
Email: safetymgmt-safety@med.umich.edu

Aviation, Pharmacy, Psychology, and Pathology, etc.
Consult corresponding clinical department for information on additional regulatory agencies including but not limited to the list above.

State of Michigan Rules for Construction or Renovation of Food Service Facilities
Promulgated by the State of Michigan Department of Agriculture and Rural Development (Food and Dairy Division). Act 92, Food Law which incorporates by reference chapters 1 through 8 of the 2009 Michigan Modified Food and Drug Administration Food Code. Visit the University of Michigan Department of Environment, Health & Safety website http://ehs.umich.edu/construction-projects/food-service-facilities/ for instruction sheet information and a copy of the Plan Review Packet and Worksheet that must be completed prior to starting a project. The University of Michigan Environment, Health & Safety (EHS) Department is the enforcing agency with authorization provided by the Washtenaw County Environmental Health Department.

Enforcing Agency—
University of Michigan EHS
Operational Health and Safety
1239 Kipke Dr.
Ann Arbor, MI. 48109-1010
(734) 647-1142

State of Michigan Rules for Construction or Renovation of Swimming Pools
Promulgated by the State of Michigan Department of Environmental Quality (Water Division). Michigan's Public Health Code, Public Act 368 of 1978, Part 125. Contact University of Michigan Department of Environment, Health & Safety for information. The University of Michigan Environment, Health & Safety (EHS) Department is the enforcing agency with authorization provided by the Washtenaw County Environmental Health Department.

Enforcing Agency—
University of Michigan EHS
Operational Health and Safety
1239 Kipke Dr.
Ann Arbor, MI. 48109-1010
(734) 647-1142

Also see 15010 "Basic Mechanical Requirements" for additional codes and standards applicable to mechanical work on University projects.

State of Michigan Department of Environmental Quality (MDEQ) (Filed many different dates)
Contact U of M Department of Environment, Health & Safety for information on environmental regulatory requirements. All project specific communication with the enforcing agency must be through or coordinated with the U of M Environment, Health & Safety Department.

Coordinating Agency—
University of Michigan EHS
Environmental Protection and Permitting Program (EP3)
1239 Kipke Dr.
Ann Arbor, MI 48109-1010
(734) 936-1920

EHS Web Site: http://ehs.umich.edu/

- Environmental Protection: http://ehs.umich.edu/construction-projects/environmental-considerations/
- Air permitting (generators, boilers, refrigeration units): http://ehs.umich.edu/environmental/air/
- Power washing and discharge to ground: http://ehs.umich.edu/environmental/water/powerwashing/
- Remediation: http://ehs.umich.edu/construction-projects/environmental-considerations/remediation/
- Storage Tanks: http://ehs.umich.edu/construction-projects/environmental-considerations/storage-tanks/
- Threatened and Endangered Species: http://ehs.umich.edu/construction-projects/environmental-considerations/endangered-species/
- Wetlands: http://ehs.umich.edu/environmental/wetlands/

Enforcing Agency—
Michigan Department of Environmental Quality
525 West Allegan Street
P.O. Box 30473

Lansing, MI 48909-7973
(800) 662-9278

MDEQ Web Site: http://www.michigan.gov/deq

United States Environmental Protection Agency (USEPA)
(Filed many different dates), which is Title 40 of the Code Federal Regulations. Contact U-M Department of Environment, Health & Safety for information on environmental regulatory requirements. All project specific communication with the enforcing agency must be through or coordinated with the U of M Environment, Health & Safety department.

Coordinating Agency—
University of Michigan EHS
Environmental Protection and Permitting (EP)
1239 Kipke Dr.
Ann Arbor, MI 48109-1010
(734) 936-1920

EHS Web Site: http://ehs.umich.edu/

Enforcing Agency—
United States Environmental Protection Agency
Region 5 (IL, IN, MI, MN, OH, WI)
77 West Jackson Boulevard
Chicago, IL 60604-3507
(312) 353-2000

USEPA Web Site: http://www.epa.gov/

Federal Aviation Administration (FAA)
Any construction or alteration projects must provide notice to FAA if they meet certain criteria. All projects that meet the criteria noted in FAA Title 14: Aeronautics and Space, Part 77- Safe, Efficient Use, and Preservation of the Navigable Airspace must file notice with FAA at least 45 days prior to start date of proposed construction or alteration.

Enforcing Agency—
U.S. Department of Transportation
Federal Aviation Administration
800 Independence Avenue, SW
Washington, DC 20591
(866) 835-5322

FAA Web Site: http://www.faa.gov/
OE/AAA Filing Web Site: https://oeaaa.faa.gov/oeaaa/external/portal.jsp

University of Michigan Buildings
That Contain Instructional Space

(Based on M-Pathways GQL database for rooms with type code 110 or 210)

BLDG NO	BLDG NAME
5179	202 SOUTH THAYER
0879	555 SOUTH FOREST BUILDING
5037	A. A. TAUBMAN BIOMEDICAL SCIENCE RESEARCH BUILDING (Auditorium)*
0421	AERO ENG - WIND TUNNEL LAB (FA/FS only)
0425	AERO ENG - PLASMA RESEARCH (FA/FS only)
0422	AERO ENG - PROPULSION LAB (FA/FS only)
0423	AERO ENG – PUMPING STATION (FA/FS only)
0168	ANIMAL RESEARCH FACILITY
0206	ANGELL HALL ADDITION-AUDITORIUMS
0175	ANGELL HALL ADDITION-HAVEN HALL
0197	ANGELL HALL ADDITION-MASON HALL
0152	ANGELL JAMES B HALL & TISCH HALL
0831	ARGUS II
0432	ART & ARCHITECTURE BUILDING
0395	BAGNOUD, FRANCOIS-XAVIER BUILDING
5092	BESTER, BOB & BETTY BUILDING
5169	BIOLOGICAL SCIENCE BUILIDNG*
4016	BIOLOGICAL ST BLANCHARD
4010	BIOLOGICAL ST CORT LABORATORY
4018	BIOLOGICAL ST CREASER LABORATORY
4005	BIOLOGICAL ST FOREST LABORATORY
4011	BIOLOGICAL ST HOUGHTON LAB
4013	BIOLOGICAL ST HUNGERFORD LAB
4037	BIOLOGICAL ST LECTURE HALL
4019	BIOLOGICAL ST NEWCOMBE LAB
4015	BIOLOGICAL ST PETTINGILL LAB
4017	BIOLOGICAL ST REIGHARD LAB
4039	BIOLOGICAL ST SPARROW LABORATORY
4096	BIOLOGICAL ST STOCKARD LABORATORY
4012	BIOLOGICAL ST WELCH LABORATORY
0407	BROWN, G G LABORATORY
0210	BUHL RES CEN FOR HUMAN GENETICS
0155	BURTON MEMORIAL TOWER
0226	CENTRAL CAMPUS REC BLD&BELL POOL
0158	CHEMISTRY & DOW W H LAB
0443	CHRYSLER CNTR CONT ENGINEER ED
0138	COMPUTER & EXECUTIVE EDUCATION BLD
0403	COOLEY, MORTIMER E MEMORIAL
0189	DANA, SAMUEL TRASK BUILDING
0225	DANCE BUILDING
1012	DB ADMIN & STUDENT ACTIVITIES BLDG
1020	DEARBORN CASL ANNEX & FAIRLANE APT
1080	DEARBORN COL ARTS SCIENCE & LETTERS
8049	DEARBORN COMMERCE PARK
1011	DEARBORN COMPUTER & INFOR SCIENCE
1013	DEARBORN ENGINEERING LAB BLDG
1076	DB ENVIRONMENTAL INTERPRET CTR
5128	DB FAIRLANE CENTER – NORTH (FA & FS only)
5128	DEARBORN FAIRLANE CENTER - SOUTH
1017	DB FIELD HOUSE AND WELLNESS CENTER
1065	DEARBORN MARDIGIAN LIBRARY
1078	DB PROFESSIONAL EDUCATION CENTER
1079	DEARBORN SCI BLDG-COMPUTING WING
1009	DB SCIENCE, CLASSROOM & ADMIN.
1077	DEARBORN SOCIAL SCIENCES BUILDING
1060	DEARBORN UNIVERSITY CENTER
0162	DENTAL AND W K KELLOGG INSTITUTE*
0447	DOW, HERBERT H BUILDING
0166	EAST HALL
0054	EAST QUADRANGLE
0221	EDUCATION, SCHOOL OF
0448	ELECTRICAL ENG & COMPUTER SCI BLDG
0435	ENGINEERING RES BLDG I (FA only)*
0436	ENGINEERING RESEARCH BUILIDNG II
0414	ENVIRONMENTAL & WATER RES ENG BL
0733	FISHER RAY BASEBALL STADIUM
1651	FLINT HARRISON PARKING RAMP*
1650	FLINT DAVID FRENCH HALL
1649	FLINT FRANCES WILLSON TOMPSON LIBRARY
5017	FLINT NORTHBANK CENTER
1664	FLINT UNIV PAVILION ANNEX
1630	FLINT WM R MURCHIE SCIENCE BLDG
1694	FLINT WILLIAM S WHITE BUILDING
0234	FRANCIS, THOMAS JR PUBLIC HEALTH
0437	GERSTACKER, CARL A BLDG (FA only)*
0424	GORGUZE FAMILY LABORATORY
0179	HUTCHINS HALL (All areas except Aikens Commons & Café Room 150)*
0429	INDUSTRIAL & OPERATIONS ENGIN BLDG
5370	JEFF T. BLAU HALL (B, 1, 2, 3, & 5 Flrs)*
0324	KELLOGG, W K EYE CENTER
0851	KINESIOLOGY BUILDING (Stair S01, Rooms 1100, 2100, & 3100)*
0211	KRAUS, EDWARD HENRY BUILDING
0137	KRESGE BUSINESS ADMIN LIBRARY (B, 1, & 2 Flrs)*
0101	KRESGE HEARING RESEARCH
0400	LAY, WALTER E AUTOMOTIVE LAB
0150	LITERATURE SCIENCE AND THE ARTS (3rd & 4th Flrs)*
0188	LITTLE, CLARENCE COOK SCIENCE BLD
0059	LLOYD, ALICE C HALL
0154	LORCH HALL
8049	LP BUSINESS ADMIN 15041 COMMERCE
0406	LURIE, ANN AND ROBERT H BIOMEDICAL ENG
0982	MATTHAEI BOT GDNS RESEARCH-ADMIN
0190	MEDICAL SCIENCE UNIT I
0200	MEDICAL SCIENCE UNIT II
0207	MODERN LANGUAGES BUILDING
0440	MOORE, EARL V BLDG
0061	MOSHER-JORDAN HALL*
0151	MUSEUM OF ART (Auditorium & Stair S5)*
0415	NAVAL ARCH & MARINE ENGINEERING
5266	NORTH CAMPUS RESEARCH COMPLEX BLDG 35 (Auditorium & Lobby)*
0196	NORTH HALL
5177	NORTH QUAD COMPLEX (Level 1 throughout & Level 2 North Tower)*
5047	PALMER DRIVE COMMONS (SW end of 2nd floor)*
0890	PERRY BUILDING (G300)*
0442	PIERPONT COMMONS (Partial basement level)*
0180	POWER CENTER FOR PERFORMING ARTS
0897	PUBLIC POLICY ANNEX
0208	RANDALL, HARRISON M LABORATORY
0416	RADIATION SCIENCES LAB 1 (FA/FS only)
0417	RADIATION SCIENCES LAB 2 (FA/FS only)
5188	ROSS SCHOOL OF BUSINESS (B, 1, 2, & 3 Flrs)*

( )* Indicates compartment of jurisdiction. Note egress from compartment; fire alarm & fire suppression for entire bldg are under BFS.

University of Michigan Buildings
That Contain Instructional Space (Continued)

(Based on M-Pathways GQL database for rooms with type code 110 or 210)

BLDG NO	BLDG NAME
5120	ROSS, STEPHEN M ACADEMIC CENTER (Rm 2150)*
0193	RUTHVEN, ALEXANDER G MUSEUMS BLDG
0219	SCHOOL OF SOCIAL WORK BUILDING
0333	SCHOOL OF NURSING BUILDING
5347	SCHOOL OF NURSING NEW BUILDING
5235	SOUTH HALL
0441	SPACE RESEARCH LABORATORY
5224	STAMPS AUDITORIUM
0445	STEARNS, FREDERICK BUILDING
0216	TAPPAN HALL
0209	TAUBMAN, A A. HEALTH SCIENCES LIBRARY
5413	TROTTER WILIAM MONROE MULTICULTURAL CENTER
5046	UNDERGRADUATE SCIENCE BLDG
0204	VAUGHAN, H F PUBLIC HLTH BL(1st & 2nd Flrs)*
5059	WALGREEN, CHARLES RJ DRAMA CENTER
5101	WEILL HALL, JOAN & SANFORD (1st & 2nd Flrs)*
0167	WEST HALL
0135	WYLY, SAM HALL
0165	WEISER HALL

University of Michigan Buildings
That Contain Instructional Space and Are Rental Properties

BLDG NO	BLDG NAME
5403	FLINT BEECHER NEFF CENTER
5343	FLINT RIVERFRONT CENTER
5360	FLINT URBAN ALTERNATIVES HOUSE
5382	WOODWARD GARDENS

University of Michigan Buildings
That Contain Dormitory Space

(Based M-Pathways GQL database for rooms with type code 910, 919, 920, and 935)

BLDG NO	BLDG NAME
0510	BAITS, VERA I EATON HOUSE
0511	BAITS, VERA I LEE HOUSE
0512	BAITS, VERA I PARKER HOUSE
0513	BAITS, VERA I SMITH HOUSE
0514	BAITS, VERA I STANLEY HOUSE
0515	BAITS, VERA II COMAN HOUSE
0516	BAITS, VERA II CONGER HOUSE
0517	BAITS, VERA II CROSS HOUSE
0518	BAITS, VERA II THIEME HOUSE
0519	BAITS, VERA II ZIWET HOUSE
0051	BARBOUR, BETSY HOUSE
0555	BURSLEY HALL
0120	CAMBRIDGE HOUSE (Compartment w/in MICHIGAN UNION)*
0109	COOK, JOHN P LAW QUADRANGLE
0052	COOK, MARTHA RESIDENCE
0053	COUZENS HALL
0054	EAST QUADRANGLE
0055	FLETCHER HALL
0057	HENDERSON, MARY B HOUSE
0108	LAWYERS CLUB*
0059	LLOYD ALICE C HALL
0060	MARKLEY, MARY B HALL
0061	MOSHER-JORDAN HALL*
0062	NEWBERRY RESIDENCE
5177	NORTH QUAD COMPLEX (North Tower levels 3 - 10)*
0040	OH GODDARD HALL
0042	OH ADELIA CHEEVER RESIDENCE
0043	OH GEDDES RESIDENCE
0044	OH JULIA E EMANUEL RESIDENCE
0046	OH L H SEELEY HALL
0045	OH PAMELA NOBLE RESIDENCE
0041	OH VANDENBERG HALL
0063	SOUTH QUADRANGLE
0064	STOCKWELL HALL
0066	WEST QUADRANGLE

( )* Indicates compartment of jurisdiction. Note egress from compartment; fire alarm & fire suppression for entire bldg are under BFS.

University of Michigan Buildings
That Contain Child Care Space

(Based M-Pathways GQL database for rooms with type code 640, and 645)

BLDG NO	BLDG NAME
5244	DEARBORN CHILD DEVELOPMENT CENTER
1047	DEARBORN KINDERGARDEN MODULE
5018	NCRC (N Campus Research Complex) B075 CHILDREN'S CENTER
0600	NORTHWOOD COMMUNITY CENTER
5240	TOWSLEY CHILDREN'S HOUSE
0390	UNIVERSITY HOSPITALS CHILD CARE CENTER

University of Michigan Buildings
That Are Inpatient Health Care Facilities

BLDG NO	BLDG NAME
5109	SAMUEL AND JEAN FRANKEL CARDIOVASCULAR CENTER (CVC)
0313	CONNECTOR between UH and MOTT adjacent to TOWSLEY
0312	UNIVERSITY HOSPITAL SOUTH UNIT 2 (old Mott)
0314	UNIVERSITY HOSPITAL SOUTH UNIT 3 (old Holden)
0318	UNIVERSITY HOSPITAL SOUTH UNIT 4 (old MCHC)
5173	C.S. MOTT CHILDREN'S AND VON VOIGTLANDER WOMEN'S HOSPITAL
0316	UNIVERSITY HOSPITAL (UH)

For more detailed boundaries for inpatient facilities and firewall keyplans in all buildings, please consult with MM Design Manager or Michigan Medicine building website..

University of Michigan Buildings
That Contain Hospital Outpatient Surgery Departments

BLDG NO	BLDG NAME
5102	BREHM TOWER (BRM) (Eye Center Expansion) (Fourth Floor)*
5038	EAST ANN ARBOR AMBULATORY SURGERY CENTER
8096	LIVONIA CENTER FOR SPECIALTY CENTER

University of Michigan Buildings
That Contain Outpatient Dialysis

BLDG NO	BLDG NAME
8072	EISENHOWER PARK WEST
8096	LIVONIA CENTER FOR SPECIALTY CENTER

( )* Indicates compartment of jurisdiction. Note egress from compartment; fire alarm & fire suppression for entire bldg are under BFS.

OUT TO BID

DESIGN GUIDELINES

1.0 CODES AND REGULATORY AGENCIES

2.0 PROJECT PROCEDURES

3.0 SUSTAINABILITY

4.0 SPECIAL INSTRUCTIONS TO DESIGNERS

5.0 SPECIAL BUILDING AREAS

6.0 TECHNICAL REQUIREMENTS

7.0 MASTER SPECIFICATIONS

8.0 PREFERRED MANUFACTURERS LIST

9.0 STANDARD DETAILS AND SCHEDULES

10.0 CHANGES TO DESIGN GUIDELINES

BUILDING COMMISSIONING

CONTRACTS & AGREEMENTS

2.0 PROJECT PROCEDURES

Contains Project related procedures, related documents and templates to be utilized by the design professional.

	Last Update	Previous Version	Former Document
2.1 OPR and BOD (Owners Project Requirements and Basis of Design)	May 2012	July 2011	SID-B Owner's Project Requirements and Basis of Design Documents
2.2 Design Deliverables	January 2017 Cells highlighted yellow indicate revisions	September 2016	
2.3 U of M Owners Review	December 2014	May 2014	SID-L Owner's Review
2.4 Document Standards And Procedures For Project Deliverables	April 2016	June 2011	SID-H Drawing and Construction Documents Standards
2.4.1 UMHHC Drawing and Construction Document Standards			
2.5 Project Estimates	September 2016	December 2015	SID-P Project Estimates
2.5.1 UMHHC Projects Estimates			
2.6 Insurance Underwriter	January 2015		
2.7 Effective Date Compiled Design Guidelines by Month and Year			
2.8 Project Manual			
2.9 Pre-Design Deliverables	June 2017		

© 2018 Regents of the University of Michigan
Design by Michigan Creative

326 East Hoover, Ann Arbor, MI 48109-1002
Phone: (734) 763-3020
Contact Us

DESIGN GUIDELINE 2.1
OWNER'S PROJECT REQUIREMENTS AND BASIS OF DESIGN DOCUMENTS

Scope

Beginning in the Schematic Design phase and continuing until the project has been as-built, the Architect/Engineer with input from the project team shall develop and periodically update an Owner's Project Requirements (OPR) document and a Basis of Design (BOD) document. These two documents together shall provide a complete description of the project's design intent. They may be submitted for Owner's review as two separate sections of one design intent document.

The OPR is an inclusive, detailed description of the Owner's goals and requirements for the project, and the Owner's expectations on how the project will be used and operated.

The BOD is an inclusive, detailed description of the Design Team's concepts, assumptions, calculations, decisions, product selections and operating conditions to meet the Owner's project requirements and to satisfy applicable codes, standards and guidelines. It shall be formatted to coordinate with and respond to the OPR.

These two documents will be benchmarks by which the completeness, adequacy and acceptability of the project will be judged. They will be the standards by which the project will be commissioned. They will answer Owner questions after occupancy, and they will be the foundation for maintenance programs and future renovation projects.

Related Sections

U-M Design Guideline Sections:

2.3 U of M Owner's Review
3.1 Sustainable Design and LEED® Requirements
3.2 Energy and Water Conservation
4.3 Building Commissioning

Reference Documents:

ASHRAE Guideline 0-2005, "The Commissioning Process"
USGBC, "LEED® Reference Guide for Green Building Design and Construction"
USGBC, "LEED® Reference Guide for Building Design and Construction - Healthcare"

Execution

Contents

The OPR shall include at least the following information:

- Summary description of the building (functions of building, high or low rise, use and occupancy classifications, anticipated hours of operation, etc.).
- Project goals, assumptions, and known limitations.
- Donor and Sponsor program requirements.

- Building and site accessibility, architectural, landscaping and aesthetics goals.
- Building and site flexibility and expandability requirements (spare capacities, survivability, reliability, redundancy, back-up power and utilities, etc.).
- Operational assumptions (maximum occupancy on a room-by-room and aggregate basis), occupancy schedules, special activities, building diversity, potential future uses, potential future renovations, etc.).
- Building envelope performance criteria.
- Environmental and sustainability goals.
- Energy and water conservation goals.
- Indoor services and technology requirements (clean room and bio-safety lab classifications, fume hood sizes and types, vivarium and environmental room conditions, furniture, marker boards, process water, gases, communications, data, security, card access control, audio/visual, etc.).
- Space-by-space design requirements (temperature, humidity, air change rates, room pressurization, sound level limits, light levels, glare limits, vibration criteria, EMF shielding, etc.).
- Space-by-space equipment heat loads and utility needs (water, gases, power, data, grounding, etc.).
- Anticipated types, classifications, and quantities of hazardous materials to be contained within the building.
- Architectural, mechanical and electrical systems operation and maintenance expectations.
- HVAC, lighting and audio/visual controls expectations.
- Summary of sole-sourced systems and equipment.
- Summary of Owner-furnished and Owner-installed equipment.
- Occupant and Maintenance training requirements.
- Project schedule.
- Project budget (UniFormat cost estimate). The U-M Design Manager will determine whether budget information should be included in the OPR or provided separately.

The BOD shall include at least the following information:

- Project background required to understand the design, including goals, requirements and decisions which significantly affect the design.
- Regulatory, site, schedule and budget limitations which affect the design.
- Codes, standards and guidelines applicable to the project.
- Code analysis describing code requirements specific to the project, e.g. smoke evacuation systems, if manifolded exhaust is permitted, special fire protection requirements, etc.
- Requirements of governing agencies (City, State, NIH, LEED, etc.).
- Climate, site, and utilities information.
- Architectural, mechanical and electrical systems descriptions (construction classifications, design loads, fire separations, base and spare capacities, diversity and reliability assumptions, redundancy, flexibility, back-up power, sub-metering, etc.).
- Outdoor summer and winter design conditions.

- Design assumptions (occupancy schedules, temperature, humidity, air change rates, room pressurization, sound level limits, light levels, glare limits, vibration criteria, EMF shielding, heat loads, water, gases, power, data, grounding, hazardous materials being stored, etc. for spaces not indicated in the OPR.
- Systems and equipment sequences of operation.
- Load calculations descriptions, including assumptions, software used, etc.
- Architectural, mechanical and electrical systems operation and maintenance requirements.
- Facility Condition Assessment list marked to indicate tasks included in the project.
- Appendices
    - Documentation of compliance to DG 3.2 (see Design Guideline 3.2 Appendices A and B for the Energy and Water Conservation Report standard format).
    - Energy Impact Statement (see Design Guideline 3.2 Appendix C for the Energy Impact Statement standard format).
    - LEED Checklist when required by Design Guideline 3.1.
    - Soils and utility services reports.
    - Building load calculations.
    - Systems and equipment sizing calculations.
    - Light level and watts/square foot calculations.
    - Effluent, dispersion, noise, vibration, and other studies.

Development and Updating

Develop the OPR and BOD by expanding the project's program and design concept report. Update them as the project goals and requirements are defined and clarified. Submit them at the end of the Schematic Design, Design Development and Construction Document phases along with the other Design Deliverables. Submit a final BOD after Project Award and after incorporation of the bid alternates. Each update shall incorporate new and revised project information including:

- Progress in project design.
- Changes in project goals.
- Changes in project scope.
- Code interpretations.
- Input from Occupants, Construction Managers and Contractors.
- Input from Plant Operations, Department of Public Safety, OSEH, etc.
- Architectural, mechanical and electrical design coordination meetings.
- Value engineering sessions.
- Test reports on existing conditions.
- Design calculations.
- Equipment selections.
- The final power system short circuit, protective device coordination and arc flash hazard study including the electronic data file for long term updating by the Owner.
- Energy and water conservation calculations and modeling.
- Updates to LEED Checklist.
- Sound, effluent, dispersion, CFD, vibration, and other studies.

- Bid Alternates and Owner's Options.
- A list of all design deviations from U-M Design Guideline requirements.
- A list of all uncompleted Facility Condition Assessment (FCA) items within the project boundary.

Format

Organize the OPR and BOD on a system-by-system basis, preferably in order by CSI Division, using a consistent style for each section. Organize each section from the more global to the more detailed and specific. Number each section and subsection in outline format. Provide a Table of Contents. Submit an electronic file copy along with the required number of printed copies.

As-Built BOD

At the conclusion of the project, the U-M Design Manager may elect to have the final BOD updated with as-built information. The means and methods for this effort will be negotiated by the Design Manager on a project-by-project basis.

To facilitate the production of an as-built BOD document, identify changes during construction that impact the final BOD and notify the U-M Design Manager accordingly. When writing addenda, CCD's and RFI's, mark them with "Impact on BOD" if they affect the BOD.

OUT TO BID

DESIGN GUIDELINES

1.0 CODES AND REGULATORY AGENCIES

2.0 PROJECT PROCEDURES

3.0 SUSTAINABILITY

4.0 SPECIAL INSTRUCTIONS TO DESIGNERS

5.0 SPECIAL BUILDING AREAS

6.0 TECHNICAL REQUIREMENTS

7.0 MASTER SPECIFICATIONS

8.0 PREFERRED MANUFACTURERS LIST

9.0 STANDARD DETAILS AND SCHEDULES

10.0 CHANGES TO DESIGN GUIDELINES

BUILDING COMMISSIONING

CONTRACTS & AGREEMENTS

2.2 DESIGN DELIVERABLES

As part of the deliverables for formal UM review at each of the major phases of design listed below, the Design Professional shall submit this "Design Deliverables" document to the University's Design Coordinator. On the "Design Deliverables" document, the Design Professional shall indicate the status of each required item (a check mark is interpreted to mean that an item has been included in the deliverables). On or attached to the "Design Deliverables" document, the Design Professional shall address any item that is NOT included in the review package.

Note that design deliverables for the Design Development phase are to include all items listed in the Design Development column of the "Design Deliverables" table AND, except as specifically stated to the contrary in the table, all items listed in the Schematic Design column of the table (which are to have been further developed during Design Development).

Note that design deliverables for the Construction Document phase are to include all items listed in the Construction Document column of the "Design Deliverables" table AND, except as specifically stated to the contrary in the table, all items listed in the Schematic Design column and all items listed in the Design Development column of the table (which are to have been further developed during the Construction Document phase).

© 2018 Regents of the University of Michigan
Design by Michigan Creative

326 East Hoover, Ann Arbor, MI 48109-1002
Phone: (734) 763-3020
Contact Us

FACILITIES & OPERATIONS
ARCHITECTURE, ENGINEERING AND CONSTRUCTION
UNIVERSITY OF MICHIGAN

Design Deliverables

January 2017

As part of the deliverables for formal UM review at each of the major phases of design listed below, the Design Professional shall submit this "Design Deliverables" document to the University's Design Coordinator. On the "Design Deliverables" document, the Design Professional shall indicate the status of each required item (a check mark is interpreted to mean that an item has been included in the deliverables). On or attached to the "Design Deliverables" document, the Design Professional shall identify all items NOT included in the review package.

Note that design deliverables for the Design Development phase are to include all items listed in the Design Development column of the "Design Deliverables" table AND, except as specifically stated to the contrary in the table, all items listed in the Schematic Design column of the table (which are to have been further developed during Design Development).

Note that design deliverables for the Construction Document phase are to include all items listed in the Construction Document column of the "Design Deliverables" table AND, except as specifically stated to the contrary in the table, all items listed in the Schematic Design column and all items listed in the Design Development column of the table (which are to have been further developed during the Construction Document phase).

Item	Schematic Phase		Design Development Phase		Construction Document Phase	
General Description (continued)	1	Scope of work narrative	1	Description of construction phasing	1	Documentation on drawings as required by building codes (specifically to include indication of maximum allowable number of people in each room)
	2	Comparison of capacities (see "Building Interior" for area comparison) to program	2	Description of any proposed occupancy within construction area	2	List of all code variances (on drawings cover sheet)
	3	List of applicable building codes on drawing title sheet	3	Description of water and vapor characteristics of roof and exterior walls	3	When special inspection or testing is required by building code, a separately bound “Statement of Special Inspections” as stipulated by Michigan Building Code
	4	Building code review (describe means of compliance for major code issues and building systems)			4	If multiple bid packages, clear indication of scope of each release
	5	List of anticipated building code variance request.			5	Identification of construction phasing, including temporary requirements during each phase

General Description	6	Anticipated building and space occupancy schedules.			6	Provide electronic, clean 2D files per DG 2.4 in Microstation or AutoCAD format (with or without the Design Professional's title block) of CD Phase drawings for use by U-M or the Construction Manager as backgrounds for special construction bid packs (e.g. telephone/data and audio/visual wiring bid packs) or creation of UM master floor plans.
	7	Life Safety (egress) plans with identification of security and access control points			7	For projects over $10 million construction cost, visual display that depicts sustainability initiatives and achievement as described in DG 3.1 "Sustainable Design Requirements"
	8	For project over $5 million construction cost,UM's list of outstanding Facility Condition Assessment improvement recommendations with notation as to which will be addressed by the project.				
	9	Owner's Project Requirements and Basis of Design document as described in DG 2.0 "Design Intent Documents"				
	10	Demonstration of compliance withDG 3.2 "Energy and Water Conservation". See DG 3.2 for deliverables requirements.				
	11	List of sustainability features incorporated into project design as described in-DG 3.1"Sustainable Design and LEED Requirements"				
	12	For new building and addition projects over $10 million construction cost, information as required to apply for LEED Silver (or higher) certification, and a project-specific LEED Checklist, both as described in DG 3.1 "Sustainable Design and LEED Requirements"				

Specifications	1	System & material narrative description	1	Outline or preliminary specifications indicating project specific features of major equipment as well as component materials, E.G. "welded Schedule 40 steel pipe", "quarter sawn oak", etc. w. same section numbering as final specification	1	Complete specification including draft front end documents
					2	List of items which are sole-sourced or dual-sourced and justification for not specifying three acceptable products
					3	For items listed in UM's "Preferred Manufacturers List", a table of specified items that are NOT indicated in UM's PML, and the justification for specifying these items.
					4	For door hardware sets that require electricity, indicate the proposed sequence of operations for the hardware.
Site (continued)	1	Site Plans to include the following:	1	General dimensions & elevations	1	Extent of construction area, construction fencing and gates
		a. Existing conditions (see site survey requirements)	2	Permanent exterior signage, for building and site elements	2	Area traffic plan, if existing roads/ walks are impacted
		b.Demolition	3	Parking/ roadway plans & elevations	3	Site development phasing
		c. Building outline (s)	4	Vehicle & pedestrian traffic controls (if required), includes pavement markings and signage location ref. DG 4.4.5	4	Construction site access
		d. Future expansion (accommodated, but UPO to determine if shown)	5	Grading Plan - 1' contours and critical spot elevations, include critical spot elevations for ADA requirements, such as ramps, at 10 scale	5	Staging area
		e. Site entrance	6	Site lighting plans simulations, specifications, equipment cut sheets and photometrics (as defined in Design Guideline 16521)	6	Construction signage
		f. Roads & driveways	7	Concept details of site fixtures & equipment	7	Site details, including hardscape
		g. Parking locations	8	Utility and ROW plans for local governing agency approval (preliminary plan review)	8	Utility profiles, elevations, details (including submittal for governing agency civil plan review)…
		h. Bus stop/ shelter (if required)	9	Refer to Sanitary Sewer Flow Mitigation Calculations	9	Utility pipe sizing calculations, engineer stamped submittal
		i. Loading dock location	10	Underground utilities plan (all underground utilities shown, including electrical and data, and coordinated with site features)	10	Refer to Storm water management procedure and deliverables

Site		j. Waste/ recycling collection locations	11	Overall site plan, all visible site features shown and coordinated with utilities.	11	Copy of local government review comments on utilities and modifications in right(s)-of-way and approval to proceed with work.
		k. Walkway locations	12	Plan to address existing hazardous/ contaminated materials, if applicable	12	Fire apparatus route and required signage
		l. Stairway locations	13	Soil erosion and sedimentation control plan (for both construction and occupancy)	13	Pedestrian and vehicular pavement striping, directional signage, traffic signage, stop signs, no parking signs, restricted access signage etc. Ref. DG 4.4.5
		m. Emergency telephone locations	14	Soil erosion and sedimentation control "Design & Review Checklist" described in UM Design Guidelines Section 02215		
		n. Utility requirements	15	Dewatering plan		
		o. Site utilities and utility tunnels	16	Structural evaluation of existing tunnels for proposed construction logistics.		
		p. Preliminary grading plan	17	Fire apparatus route layout		
		q. Soil retention work, if needed	18	Refer to storm water management procedure and deliverables		
		r. Land encumbrances (deed restrictions, easements, etc.)				
		s. Fire/ Emergency Access Plan				
	2	Site plan for public use DG 2.4				
	3	Refer to storm water management procedure and deliverables				
	4	Preliminary site lighting plan				
Landscaping	1	Existing conditions	1	Planting plan	1	Protection for existing trees and significant plantings during construction
	2	Landscaping concept	2	Irrigation plan	2	Soil preparation & planting specifications
	3	Existing irrigation		Irrigation electrical and water source, including building penetration details and interior piping to panels.	3	Guying diagrams
				Irrigation controls	4	Irrigation Piping diagrams
					5	Irrigation Pipe sizes
					6	Landscape and irrigation details and legends
Structural (continued)	1	Structural Scheme plans	1	Foundation plan	1	Definition of control joints
	2	Written description	2	Typical floor framing plan	2	Beam, column & slab schedules
Structural			3	Framing plans at unique features	3	Mechanical and electrical concrete housekeeping pads
			4	Main member sizing	4	Foundation details

			5	Structural sections	5	Structural details
					6	Structural notes
					7	Structural calculations
Building Exterior Envelope	1	Typical elevations	1	All building elevations w/ dimensional heights	1	Roof-mounted equipment
	2	Fenestration layout	2	Typical wall sections	2	Roof details
	3	Material designations	3	Parapet & coping details	3	Exterior details
	4	Overall building cross-sections	4	Roof & drainage plan	4	Flashing details
	5	Roof layout	5	Exterior door details	5	Control joint definition & details
			6	Typical window details		
			7	Details of unique features		
			8	Expansion join locations		
			9	Large scale building cross- sections		
Building Interior	1	Typical floor plans (min. 1/16" scale) w/ legends	1	All floor plans (min. 1/16" scale)	1	Dimensioned floor plans
	2	Floor plans for room numbering & public use (see DG 2.4)	2	Submit floor plans for revised room numbers (see DG 2.4)	2	Enlarged plans
	3	Demolition Plans	3	Enlarged plans at elevation changes (such as stairs)	3	Partition details
			4	Enlarged plans at toilet rooms	4	Interior details
	4	Area use identification & area in square ft.	5	Reflected ceiling plans	5	Interior elevations
	5	Mechanical, electrical & other service closets & rooms	6	Wall types, fire ratings, smoke control zones	6	Finish schedules
	6	Circulating paths	7	Plan to address existing hazardous materials, if applicable	7	Door & hardware schedules
	7	Area tabulations compared to program requirements	8	Fixed seating	8	Room signage
	8	Show flexibility for expansion & alterations	9	Defined seating, serving, & kitchen facilities	9	Schedule of proposed movable equipment that is NOT indicated on documents (for reference)
	9	Preliminary layout of major spaces w/ fixed equipment	10	Equipment & furniture layouts	10	Schedule of lab fixtures (turrets, etc.), if applicable
			11	Important interior elevations		
			12	Details of unique features		
			13	Details of fixed equipment		
			14	Preliminary finish schedule		
			15	Preliminary door schedule		
			16	Informational signage		
Elevators	1	Elevator locations	1	Elevator shaft section	1	Dimensioned plans
	2	Equipment room locations	2	Equipment description	2	Sections & details of hydraulic cylinder, if applicable

					3	Description of shaft sump pits
					4	Elevator car & equipment support details
					5	Description of controls & Fixtures
					6	Door & frame details
					7	Interior details including lighting
HVAC (continued)	1	Identify all systems	1	Overall building air flow diagram indicating air handlers, exhaust fans, duct risers, and duct mains	1	Detailed piping and duct design with all sizes indicated
	2	One- line diagrams for each air, hydronic, steam, condensate and all other HVAC related systems, and other materials as required to describe the fundamental design concept for all mechanical systems	2	Duct layout for typical spaces	2	Floor plans w/ all components and required service access areas drawn to actual scale. On the plans, indicate duct sizes and air flow quantities relative to each room, including CFM in and out of all doors. Indicate location of control panels.
	3	Indication of the amount of redundancy for all major pieces of mechanical equipment, e.g. "two pumps 100% capacity each"	3	Equipment schedules (major equipment)	3	Lab air valves and volume control boxes (note that each is to be identified by a unique number assigned by the engineer). Provide a schedule that indicates the control sequence that applies to each room (room #, room descriptor, control sequence #)
	4	Major equipment locations.	4	Equipment locations (w/ enlarged mechanical plans)	4	Detailed floor plans of mechanical rooms w/ all components and required service access areas drawn to actual scale
	5	Air intake & discharge locations	5	Indication of typical locations of fire dampers, smoke dampers, and combination F/S dampers	5	Cross-sections through mechanical rooms and areas where there are installation/coordination issues (tight space, zoning of utilities). Indicate required service access areas
	6	Gross HVAC zoning, and typical individual space zoning (e.g. VAV boxes per office =?)	6	Control diagrams (concept form) for all mechanical and plumbing systems	6	In common mechanical space, indication of space zoning by system
	7	Mechanical legend	7	Outline of major control sequences of operation	7	Connection to fire alarm & campus control systems
	8	Special occupancy zones	8	M/E smoke control schemes	8	Equipment details, including structural support requirements
HVAC			9	Preliminary floor plans of mechanical rooms w/ all components and required service access areas drawn to scale	9	Penetration/ sleeve details
			10	Preliminary calculations	10	Installation details

			11	Meter locations and types	11	Duct construction schedule (on the drawings), indicating materials and pressure class for each duct system
					12	Detailed controls drawings, including clear differentiation of trade responsibility for control, fire, and control power wiring
					13	Detailed sequences of operation including the specific set points and time delays
					14	Design calculations
Plumbing & Piping	1	One-line (riser) diagrams for every plumbing system (e.g. domestic water, sanitary, storm, gas, RODI, etc.) and other materials as required to describe the fundamental design concept for all plumbing systems	1	Updated design criteria for each plumbing system (including set points, water quality levels, etc.)	1	Water riser diagram, including assumed fixture counts per floor connection
	2	Indication of the amount of redundancy for all major pieces of mechanical equipment, e.g. "two pumps 100% capacity each"	2	Preliminary piping plans (domestic & process) with indication of required service access areas	2	Waste and vent riser diagrams including assumed fixture counts per floor connection
	3	Main water supple, storm, and sanitary leads	3	Meter locations and system submittals	3	Foundation drains
	4	Major equipment locations	4	Back flow prevention locations	4	Detailed piping design with all pipe sizes indicated
	5	Restroom location(s)	5	Fixture schedules, to include lab fixtures	5	Typical plumbing details, including structural support requirements
	6	Plumbing legend	6	Equipment schedules (major equipment)	6	Water heating piping details
			7	Preliminary floor plans of mechanical rooms w/ all components and required service access areas drawn to scale	7	Penetration sleeve details
			8	Provide water metering service system submittals for DM submission to City of Ann Arbor reference DG 6.2 220010 Plumbing Specialties	8	Design calculations
Fire Protection (Mechanical) - contiued	1	One-line diagrams for each fire protection system, and other materials as required to describe the fundamental design concept for all fire protection systems	1	Location of test headers and fire department connections	1	Fire protect, service entrance details
Fire Protection (Mechanical)	2	Report documenting adequacy of utility	2	Preliminary piping plans (domestic & process) with indication of required service access areas	2	Fire protection plans (incl. header and riser layout) with indication of any required service access areas

	3	Connection to utility	3	Preliminary floor plans of mechanical rooms w/ all components and required service access areas drawn to scale	3	Detailed piping design with all major pipe sizes indicated
	4	Location of fire pump and controller, jockey pump and sprinkler valves	4	Fire pump sizing calculations	4	Location of all sprinkler zone valves, drains, and fire hose connections
	5	Sprinkler legend			5	Zoning extents, for areas where the contractor will size the piping
	6	Optional F.P. systems			6	Typical sprinkler installation details, including structural support details
					7	Penetration/ sleeve details
					8	Design calculations
Lighting	1	Electrical symbols legend	1	Typical interior lighting and control plans	1	Interior and outdoor lighting plans, including control systems and devices, lighting panels, switching and circuiting
	2	General drawing notes	2	Outdoor lighting and control plans	2	Lighting control system schematics and wiring diagrams
	3	General photometric levels	3	Fixture types and schedule	3	Lighting control system detailed sequences of operation
	4	Fixture, lamp, and controls descriptions	4	Control system and control device descriptions	4	Installation details, including structural support details
	5	Preliminary interior lighting plans	5	Typical photometric calculations	5	Normal lighting photometric calculations
	6	Preliminary outdoor lighting plans	6	Dimming, daylighting and low voltage control zones	6	Emergency lighting photo metric calculations on 2'x2' grid for State BFS approval
					7	General notes on conduit and wire sizes for 20 amp single phase lighting branch circuits
Electrical Power Distribution - contiued	1	Electrical demolition	1	Manhole, duct bank, and building entry plans and details	1	Details of power service to building
	2	One-line and riser diagrams with equipment ratings	2	Normal power riser diagram with circuit breaker, fuse, conduit and wire sizes	2	Detailed power plans, including primary cable raceways, feeder conduits, electrical loads, duplex and special receptacles, and circuiting
	3	Manhole, duct bank, and building entry locations	3	Emergency power riser diagram with circuit breaker, fuse, conduit and wire sizes	3	Emergency power system plans, controls, and details
	4	Exterior equipment locations	4	Grounding riser diagram	4	Connections to other building systems, including fire alarm and HVAC systems
	5	Substation, generator and ATS descriptions	5	Substation standard detail	5	Details of non-standard electrical installations
Electrical Power Distribution	6	Substation, generator, and electric room locations	6	Substation front elevation	6	Final short circuit, coordination and arc flash hazard study

	7	Preliminary substation and generator room plans	7	List of equipment on emergency power	7	Conduit and wire sizes for services, feeders, and special branch circuits (other than 20 amp single phase)
	8	Electrical load calculations based on watts/ sf	8	Electrical load calculations	8	General notes on conduit and wire sizes for 20 amp single phase branch circuits
			9	Panel schedules	9	Notes identifying locations of separate and shared neutrals
			10	Preliminary short circuit and protective device coordination study	10	MCC elevations
			11	Electrical equipment location plans	11	Grounding details
			12	Typical electrical outlet location plans	12	Roof, wall and floor penetration details
			13	Plan for temporary power doing construction.		
Fire Alarm and Emergency Communications	1	System descriptions	1	Riser diagrams	1	Detailed FA and EC panel, device and appliance location plans including duct detectors, fire/ smoke dampers, sprinkler flow and tamper switches, monitor and control modules, door hold -opens, door lock releases, etc.
	2	FA and EC panel locations	2	Auxiliary panel, remote panel, device and appliance location plans including pull stations, smoke detectors, horns, speakers, strobes, etc.	2	Strobe light candela ratings
	3	MOSCAD panel location	3	MOSCAD standard detail	3	Risk analyses required by NFPA-72
	4	Preliminary FA and EC device and appliance location plans			4	General notes on conduit and wire sizes
					5	Details of connections to HVAC, fire pump, fire suppression, door hold-open, door lock, and MOSCAD systems
					6	MOSCAD antenna location plans and installation details
					7	Detailed sequences of operation and/or alarm matrix
Communications (Including voice, data & video systems) - continued	1	Manhole, duct bank, and building entry locations	1	BE and TR locations, sizes, and door swings	1	Detailed voice, data and video outlet locations
	2	Building Entrance (BE) and local Telephone Room (TR) locations	2	Backboard locations in BE and TR's	2	Details of telecommunications service to the building
	3	Riser diagram	3	Raceway and grounding riser diagrams	3	Floor box schedule
	4	Preliminary cable tray plans	4	Conduit and cable tray plans with conduit and cable tray sizes	4	Conduit, outlet box and floor box installation details
			5	Material cut-sheets	5	Power outlet locations in the BE and TR's

Communications (Including voice, data & video systems)			**6**	List of equipment to share telecom rooms	**6**	Locations of non-telecom equipment in the BE and TR's
			7	BE and TR heat loads		
			8	Typical voice, data and video outlet location plans		
			9	Emergency phone locations and types (wall or pedestal)		
			10	Courtesy phone locations		
Security (including CCTV and Card Access Control Systems)	**1**	System descriptions	**1**	Riser Diagrams	**1**	Detailed equipment location plans
	2	Panel locations	**2**	Equipment descriptions	**2**	Equipment schedules
	3	Preliminary device location plans	**3**	A/V equipment location plans	**3**	Wiring diagrams
			4	Clock and other equipment location plans	**4**	Installation details (including cabinets, hangers, and connection boxes)
					5	Detailed sequences of operation
Other Graphics	**1**	Renderings, models, or other graphics as necessary to clearly present concept	**1**	Updated renderings, models and graphics required only as appropriate for design development	**1**	Updated renderings, models and graphics required only as appropriate for construction document preparation
Cost	**1**	Preliminary cost estimate. For projects with cost greater than $500,000, use format described n UM Design Guidelines 2.5 "Project Estimates"				
	2	Cost Benchmarking. For projects with const. cost $5million or greater ref. DG 2.5 Project Estimates for Project Benchmarking Requirments				
Notes	**1**	All movable furnishings and artwork are considered to be independent of the architectural design project.				
	2	Submittals of deliverables for DD and CD phases are to be proceeded by a complete response to UM review comments on the previous phase of design work.				
	3	No individual volume of drawings is to exceed 25 lbs. in weight. No individual specification book volume is to exceed three inches in thickness.				

FACILITIES & OPERATIONS
ARCHITECTURE, ENGINEERING AND CONSTRUCTION
UNIVERSITY OF MICHIGAN

Design Deliverables/Schematic Design/Site 3) Sanitary Sewer Mitigation Supplemental Information for the Design Professional

All developments with City of Ann Arbor sanitary sewer must mitigate new sanitary sewer flows per the City of Ann Arbor Developer Offset-Mitigation Program. Calculations and offset-mitigation costs, as well as fees for City modeling to verify sewer capacity, are the responsibility of the project. Payment in lieu (of Footing Drain Disconnects), building removal, and plumbing retrofit fixtures are typical U-M forms of sanitary sewer offset mitigation accepted by the City.

The design team will calculate peak sanitary sewer flow based on type of facility or use(s) from the City of Ann Arbor's Table A. If taking credits for removing sanitary flow, peaking factor and system recovery factor are to be applied after the average daily existing flows are subtracted from the proposed average daily flows. (Note that the system recovery factor changed in 2015 to 1.1, and the City's calculation example on the website may be out of date.)

The AEC Design Manager will review calculations with U-M OSEH prior to submitting to the City. The Design Manager will also verify if credits for demolition of existing facilities or removal of flow are to be taken on the project and shown on civil sheets/City plan submittals. Include sanitary sewer peak flow offset mitigation calculations on plan sheets for City preliminary plan review. Allow a *minimum of three months* for City modeling to verify sanitary sewer capacity.

The AEC Design Manager will budget $3,000 per 1 GPM of new/added peak sanitary flow (as of 7/2016). Rates are subject to change each fiscal year on July 1. The Design Manager will request a payment in lieu invoice letter from the City (Alison Heatley). Checks are made payable to the City of Ann Arbor and should be mailed or hand delivered to the City Engineering Department to the attention of Alison Heatley. The project is responsible to pay the associated sanitary sewer mitigation fee to the City prior to the water meter set. Send a copy of the payment invoice and receipt to U-M OSEH.

Back to AEC Design Deliverables

DESIGN GUIDELINE 2.3
OWNER'S REVIEW

Scope

Submit the project's design documents for University of Michigan (Owner) reviews at the conclusion of each major stage of design (generally at the end of SD, DD, and CD phases). The Owner's reviewers may include (but are not limited to) the U-M Project Director, U-M Design Manager, U-M Project Manager, external construction manager, U-M Planner's Office, U-M User groups, U-M Dept. of Public Safety and Security, U-M OSEH, U-M Architecture and Engineering, U-M Interior Design, U-M ADA Coordinator, U-M Commissioning and Plan Review, U-M Code Inspection, U-M Utilities and Plant Engineering, U-M Plant Operations Shops, U-M Key Office, U-M Building Services, U-M Maintenance, U-M Grounds and Waste Management, U-M Parking and Transportation, U-M ITSComm (telecommunications), U-M Risk Management, and Factory Mutual. The project's Design Manager will coordinate the Owner's review activities.

An Owner's review is a comprehensive examination of a project's design documents to evaluate if the design meets the Owner's intent. However, the Owner's reviews shall not serve as the A/E's design, drafting, or coordination checks. Coordinate and check the design documents before submitting them to the University for Owner's review.

Related Sections

U-M Design Guidelines:
2.1 Owner's Project Requirements (OPR) and Basis of Design (BOD)
2.2 Design Deliverables
3.2 Energy and Water Conservation

Execution

When the design documents are submitted to the University for review, include a Design Deliverables checklist which is marked to indicate the completeness of the design documents. Include an updated OPR and BOD in accordance with Design Guideline SID-B. Also include an updated Energy and Water Conservation Report and an Energy Impact Statement when required by Design Guideline SID-D.

When the design documents are received, the Design Manager will distribute them for review. Comments received by the Design Manager will be assigned action codes and sent to the A/E for resolution. On large or complex projects, the Design Manager may hold meetings with the A/E and reviewers to discuss the comments before action codes are assigned.

Upon receipt of the Owner's review comments:

- Incorporate all comments coded "A" (approved), or contest the comment in writing to the Design Manager.
- Provide the Design Manager with a written response to each comment coded "R" (A/E to review and reply) or "O" (other action required). Each response shall describe how the associated comment is being resolved.
- Request clarification of any comment that is not fully understood. A response similar to "Comment not understood" is unacceptable.
- Discuss with the Design Manager any comments that will significantly affect the project's schedule or budget and document these in a written summary of the review.

The Owner's reviewers will spot check the A/E's written responses to verify their review comments were understood. The reviewers will then spot check the next revision of the design documents to verify their comments were resolved. Comments that were ignored or not adequately resolved may be resubmitted as often as necessary until they are completely and acceptably resolved.

While the Owner's reviewers strive to provide appropriate comments as early in the design as possible, specifics of the design often do not appear in sufficient detail for the reviewers to comment on until the final review. Therefore, the lack of comments on a vague or incomplete aspect of the design during the earlier reviews shall not be construed as Owner approval of any iteration of the design.

FACILITIES & OPERATIONS
ARCHITECTURE, ENGINEERING AND CONSTRUCTION
UNIVERSITY OF MICHIGAN

DESIGN GUIDELINE 2.4
DOCUMENT STANDARDS AND PROCEDURES FOR PROJECT DELIVERABLES

General

This section provides guidance and instruction, to the Design Professional, for preparing and submitting documents to the University of Michigan.

Documents include but are not necessarily limited to the following:

- OPR/ BOD (Owners Project Requirements and Basis of Design)
- Area Summary (Gross Sq Ft)
- General CAD Drawing Standards
- Room Numbering Floor Plans
- Specifications
- Bid Sets
- Construction Sets
- Master Floor Plan Documents
- Record Documents

Design Guidelines

DG 2.1 OPR and BOD (Owners Project Requirements and Basis of Design)
DG 2.2 Design Deliverables
DG 4.3 Building Commissioning
DG 7.0 Master Specifications

2.1 Owners Project Requirements and Basis of Design – OPR/BOD

- Provide BOD/OPR in electronic format
    - Provide in PDF format, ready to print
    - Document shall be formateed to print 2 sided
    - Start each section on a new odd number, right hand page
    - Provide gutter margin to accommodate binding
    - Headers and footers for each page shall include
        - Project number
        - Building Name and Number
        - Project phase SD DD CD

        - Date submitted
        - Page and section designation
    - Document shall be in color
    - Format size 8.5 x 11 or 11 x 17

- Provide printed copies, number TBD based on project, as requested by Design Manager

2.2 Area Summary (Gross and Net Square Footage)

- The Design Professional shall calculate a Gross Construction Square Footage total as described below.
    - Complete calculation for each phase of the design.
    - Provide a floor plan for each floor with perimeters showing the Full, Half and Zero gross square footages.
        - Include sub-totals for full and half as well as the floor total.
        - Include on the first page the totals for each floor and the grand total for the building.

University of Michigan – Architecture, Engineering and Construction
Standard Method for Calculating Construction Gross Square Footage of a Building
Modified after AIA Document D101, 1995 *Methods for Calculating Areas and Volumes of Buildings*

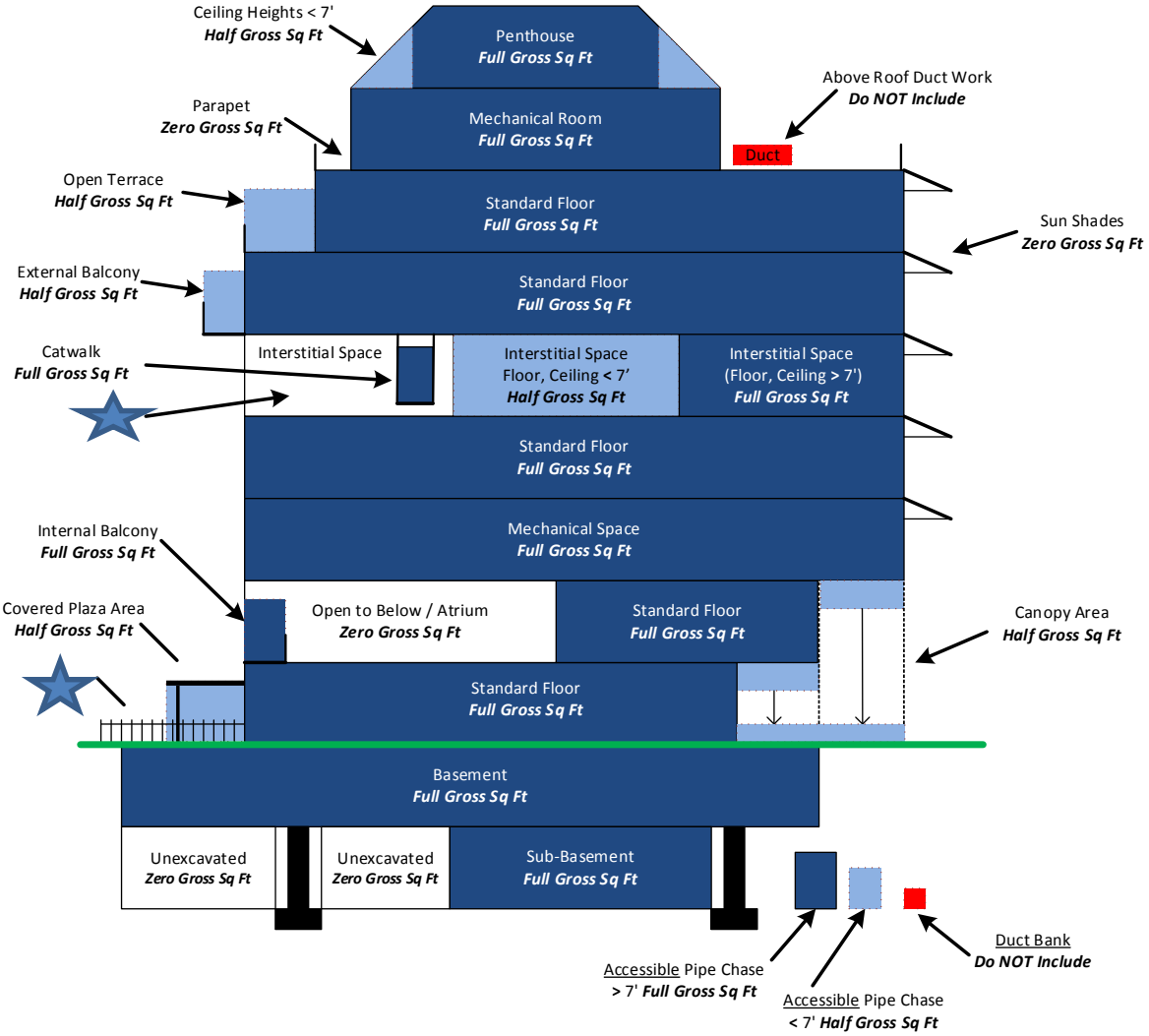

2.3 General Project Drawing/CAD Standards

The following are University of Michigan Architecture Engineering and Construction (AEC) drawing/CAD standards. At the beginning of the project, coordinate specific project requirements with the Design Manager.

- Standard sheet size should be Arch D - 24 inches wide by 36 inches long or Arch E1 - 30 inches wide by 42 inches long. Other drawing sizes require the approval of the Manager of U-M Space Information (arranged through the Design Manager).
- File naming
    - Base all file names on the current National CAD Standards - Uniform Drawing System (Level 1 or Level 2).
    - Index of sheets should be the first file in the set and easily identified by its filename. Ex) G-001.dwg or GI001.dwg (UDS Level 1 or 2)
    - Sheet files should be named consistent with the Index of sheets and should be easily identifiable using UDS naming conventions
    - Model files should be named consistently and be easily identifiable using UDS naming conventions
- Reference Files
    - Deliver all reference files in the same folder to allow for any standard CAD viewer to easily open files with all references intact.
- Layer Names
    - Utilize current National CAD Standard layer names.

Drawing Information – include the following:

- Complete index to drawings on first or second sheet of the entire set and on first or second sheet of each discipline series and volume.
    - When sheets are added or deleted during the course of construction, final Record Drawing set shall have the index updated to reflect the final documents.
- Complete symbol and abbreviation legend(s) applicable to each series (where a series is a subset such as Architectural, Electrical, etc.) on first or second sheet of each series. (Parts of the legend may be repeated on sheets throughout the sets or series as deemed appropriate by the A/E, but the legend on first or second sheet shall be comprehensive.)
- Locations of all equipment t shown on all drawings using accepted symbols fromthe Legend. Do not rely solely on notes. Examples include, but are not limited to: flow control and isolation valves, all types of dampers, turning vanes, access doors, clean-outs, etc.
- Scale indicated by note and by graphic scale bar on each applicable drawing, detail and section. Any numbers or letters associated with the scale bar are to

be a minimum 1/8 inch high. Where scale is applicable for entire drawing, scale references to be located near lower right corner of drawing.
    - Define font type and size
    - North arrows on plan sheets, consistently oriented on all plans, with the north arrow either oriented to the top or the right of the sheet.
    - Tagged column grid on all plan sheets (civil, architectural, mechanical, etc.), at all design phases.
    - Room names and numbers on all plan sheets (civil, architectural, mechanical, electrical, etc.) Design Development and Construction Document Phase. Room numbers on plans with a corresponding index on the same page is acceptable.
    - Where a portion of a plan or elevation appears on a sheet, a key plan shall be provided in the lower right portion of the drawing area to show the location of that portion relative to the whole.
    - Cross-reference all plans, elevations, sections, and details as applicable.
    - Floor live load capacities shall be listed on drawings.
    - Clearly demarcation between existing, demolition, new, and replacement work.
    - Screening, shading, crosshatching, other indications of materials or locations, and text shall not obliterate significant information, and shall be capable of being reproduced without "bleeding" when the document is reduced to half size. Use screen patterns equal to or coarser than 50 percent, 50 line.
    - All details shall be numbered.
    - Schedules shall be horizontal orientation.
    - Basic attrigutes of mechanical, electrical and plumbing equipment/ fixture shall be scheduled on the drawings.
    - Light fixtures shall be scheduled on drawings.
    - Number each paragraph in a sequence of operation narrative on drawings.

- Title Block Content:

    - The University will identify the Project Title, Building Number and Project Number, which the A/E shall put on each drawing.
    - Locate at the lower right corner of the sheet.
    - Include the following information
        - University of Michigan building number and building name
        - University of Michigan project number and/or Plant work order number
        - Project title
        - Sheet title:Be as descriptive as possible and unique within the drawing set.
        - Revision history block: Locate above project information. When submitting to the University any sheet with information not previously submitted, a note shall be included on one of the issuance lines on the title block, indicating purpose of submittal and date. This applies to

design review and contract issuances as well as addenda, bulletins, etc. All such notations of issue shall remain on each sheet. In addition to the note on the issuance line, sheets which have already been released for bids shall have changes clearly delineated, by "clouding" or similar means.

- :
- Additional items, professional stamps, Design Professional information, address etc. shall be vertically on the right hand side of the drawing.

- Plans and specifications issued for regulatory approval shall be sealed by the Architect or Engineer responsible for the work. Each drawing sheet is to include the name and address of the company primarily responsible for it content regardless of whether or not it is the prime design profession for the project.
- The title sheet, or second sheet, shall list all applicable building codes for the project, including but not limited to the building code, the electrical code, the mechanical code, and the plumbing code. The construction document drawings are to include all information required by the applicable codes to be present on the drawings.

- Contact the Design Manager to obtain a copy of AEC's CAD standards and a copy of our CAD seed files (which include AEC Title Blocks) and symbol libraries.

2.4 Room Numbering Assignment Procedure

Design Professionals shall NOT assign room numbers. UM AEC-Space Information is responsible for all room numbering. The Design Professional shall submit all floor plans for room numbering to the Design Manager. Submittal of the floor plans for official room numbering should be according to the following format and schedule:

- **Schematic Design:** Submit PDF's of all floor plans for initial room numbering assignments. Plans should display only walls, doors, windows, structural, stairs, ramps, elevators and restrooms. Remove all architectural symbols, references, column lines etc. Insert blank room number boxes anywhere room numbers are needed. Include room names on plans if available. If plans include existing space not being renovated, include existing room numbers. These can be obtained by requesting existing plans directly from AEC-Floorplans@umich.edu.

- **Design Development/CD Phase:** Submit revised plans *as often as necessary* showing all architectural changes that result in new, deleted or moved rooms, doors and/or wall openings. Even simple changes may result in revised room numbers. Indicate areas that have been changed with revision bubbles and empty room number boxes wherever new room numbers are needed. Please also show any previously assigned room numbers. PDF should be clean and display only items as described above in the Schematic Design section.

- AEC-Space Information will provide the Design Professional and Design Manager with officially stamped "Approved Room Numbers" PDF document(s) within three (3) business days of the receipt of the request from the Design Manager.

2.5 Specifications Requirements

General

AEC maintains within its Design Guidelines both a Preferred Manufacturers List and Technical Sections. These components of the Design Guidelines reflect the needs and experiences of the University in regards to the specific equipment being addressed. The A/E shall select manufacturers from the list that are able to supply the products needed for the given project and whenever possible, shall include at least three acceptable manufacturers. The Preferred Manufacturers List shall not substitute for the A/E's professional judgment. In the unusual circumstance where the listed products are not suitable, the A/E must present justification for using other products and must obtain the written approval for these products from the Design Manager. The A/E shall incorporate the standards in the Technical Sections in the project specifications.

University Architecture and Engineering maintains a limited Master Specification for use by in-house designers. A/Es may use these specifications, but must edit these specifications to make them project specific. However, they should not substitute these specifications for their professional judgment regarding the requirements of each individual project. Use of these specifications will not relieve the A/E from the obligations of the contract, stated or implied, that pertain to their performance or the performance of their product.

Project manuals shall contain Front End Documents in addition to general requirements (Division 1) and technical specifications (Divisions 2 through 32). See paragraphs below titled "University of Michigan Standard General Conditions" and "Other Standard Documents".

Specification Standard: The University recommends compliance with the principles and practices outlined in the CSI Manual of Practice.

Use of the 3-Part Section Format is mandatory.

Use of the Page Format is encouraged, but is not mandatory.

Use the 2012 CSI MASTER FORMAT Section numbers and titles for organizing Documents and specifications within Project Manuals. Comply with guidelines for contents of each Division and Section of the specifications.

Language and Terminology

Compliance with the recommendations of Manual of Practice Chapter 4 "Specification Language" is strongly encouraged. The following requirements are mandatory:

Write specifications as if addressed to the General Contractor. Do not address specifications to "This Contractor" or "The subcontractor." Where specific parties must be referred to for

clarity, use language similar to the following: "Engage a licensed Professional Engineer to perform calculations," or "Require Installer to examine substrate prior to installation."

Eliminate the term "by others" from drawings and specifications. If work is not part of the Contract, say so directly using (N.I.C.) or similar constructions. If, for example, a mechanical item is shown on an architectural sheet for clarity, use the phrase "by mechanical trades."

Eliminate the term "or equal" from specifications. The University requires Contractors to bid only products specified as "approved." List not less than three alternative, equivalent manufacturers for each generic product specified, unless no other equivalent products exist.

University of Michigan Standard General Conditions

The University maintains its own Standard General Conditions and Supplemental General Conditions. Obtain a copy of these documents and make sure the specification writer is fully familiar with it.

In general, Special Conditions are not required. However an A/E may wish to modify language concerning shop drawing review or other items. Coordinate use of Special Conditions with the Design Manager.

2.5 Submitting Bid Sets

- Provide documents to be issued for Bid in PDF format using the current PDF driver.
    - Drawing Sets
        - Provide a single Combined PDF that is ready for printing. Each volume should be a single PDF.
        - Volumes should be used when the Drawing sets contain more than 175 individual sheets. Each volume should include an index page. Volumes should be broken between disciplines whenever possible.
        - Format size will be full size drawings.
    - Specifications:
        - Provide a single Combined PDF that is ready for printing.
        - Volumes should be used when the Specifications contain more than 1200 individual sheets. Each volume should include an index page. Volumes should be broken between disciplines whenever possible.
        - Each division of specification will start with a header on the top of the page.
        - Document shall be prepared for 2 sided printing.
        - Format size 8.5" x 11"
- Printed copies are not required.
- University of Michigan electronic file transfer/sharing website shall be utilized for submitting documents.

2.6 Submitting Construction Sets

- Construction Documents (drawings and specifications) should consist of the original Bid Documents modified to include all addenda, accepted alternates and other contractually approved modifications.
- Provide documents to be issued for Construction PDF format using the current PDF driver. All Construction documents should be digitally signed and sealed by the design professional.
    - Drawing Sets
        - Provide a single Combined PDF that is ready for printing.
        - Volumes should be used when the Drawing sets contain more than 175 individual sheets. Each volume should include an index page.
        - Volumes should be broken between disciplines whenever possible.
        - Format size will be full size drawings.
    - Specifications:
        - Provide a single Combined PDF that is ready for printing.
        - Volumes should be used when the Specifications contain more than 1200 individual sheets. Each volume should include an index page. Volumes should be broken between disciplines whenever possible.
        - Each division of specification will start with a header on the top of the page.

        - Document shall be prepared for 2 sided printing.
        - Format size 8.5" x 11"
- Printed copies are not required.
- University of Michigan electronic file transfer/sharing website shall be utilized for submitting documents.

2.7 Floor and Site Plans – Public Use

On occasion users may request thematic floor plans (i.e., room types or assigned departments) and/or site plans to share project information publically (i.e., web page display, presentations, media use, etc.). Architecture, Engineering and Construction (AEC) employees should provide the following information to the design professionals or user group staff members responsible for the creation of floor and site plans for public use.

Floor Plans

- Floor plans ***should*** contain:
  Walls, Doors, Windows, Stairs, Elevators.

- Floor Plans ***may*** contain:
  - Fixed furniture in class rooms, offices, conference rooms, and laboratories (but ***should not*** contain labels identifying any fixed furniture in these areas)
  - Restroom fixtures
  - Thematic room type floor plans (See Color & Label Guideline below for suggested colors and labels.)
  - Thematic department floor plans, ***with the exception of following***, all of which should be labeled as "Support Departments:"
    - Unit for Laboratory Animal Medicine (ULAM)
    - Plant Operations spaces, such as Mechanical, Maintenance, or Custodial
    - Telecomminication / Data spaces

- Floor Plans ***should not*** contain:
  - Utility tunnel information (tunnel walls, doors to tunnels, and/or access hatches)
  - Mechanical equipment, piping layouts
  - Card access control system information (card reader and control panel locations, and wiring diagrams)
  - Security system information (security sensor, camera, video recorder and control panel locations, and wiring diagrams
  - Columns and column lines

Site Plans

Site plans should not contain any reference (visual or textual) to utility tunnels, roof access or mechanical and electrical spaces.

Document Format

- Provide one *pdf* file per floor.
- The original size should be either 8.5” x 11” or 11” x 17”.

Direct questions regarding plans for public use to:

Manager, Space Information & FIC
The University of Michigan
Architecture, Engineering & Construction
(734) 615-9023

2.8 Record Documents

- Record Documents shall show all significant changes to the Construction Set resulting from addenda, accepted or deleted alternates, field orders, construction change directives, RFIs, bulletins, mark-up prints or drawings and/or other data generated by the Contractor(s) during the course of construction of the Project.

    - Drawing Sets
        - Provide a single combined PDF.
        - Volumes should be used when the Drawing sets contain more than 175 individual sheets. Each volume should include an index page.
        - Volumes should be broken between disciplines whenever possible.
        - Format size will be full size drawings.

    - CAD
        - The Design Professional shall also provide a complete set of all original CAD files (AutoCAD, Revit, MicroStation, etc.) and associated electronic files (dependencies, drawings, data and models) required for the Owner to reproduce the Record drawings via CAD.

    - The Design Professional shall also provide original (paper) and/or color scanned copies (PDF) of all supporting documents provided by the Contractor for the purposes of updating the Record Drawings.

    - Specifications:
        - Provide a single Combined PDF.
        - Volumes should be used when the Specifications contain more than 1200 individual sheets. Each volume should include an index page. Volumes should be broken between disciplines whenever possible.
        - Each division of specification will start with a header on the top of the page.
        - Document shall be prepared for 2 sided printing.
        - Format size 8.5” x 11”

    - Provide O & M manuals for all equipment and materials, per DG 4.3 Building Commissioning

2101 Commonwealth Blvd, Suite B
Ann Arbor, MI 48105-5759
www.med.umich.edu/facilities/plan/

2.4.1: UMHHC - DRAWING AND CONSTRUCTION DOCUMENT STANDARDS (SID-H-H)

Related Sections

Basis Guideline: NA
For an explanation of the use of these guidelines, see "Design Guidelines for UMHHC Facilities"

General

All project deliverables, including meeting minutes, cost opinions, transmittals, drawings, emails and cost opinions, shall include the correct RTN number and CBN number.

Coordinate and communicate with assigned Facilities Planning team, including Mechanical and Electrical Engineers, Interior Designers and Equipment Planners. Coordinate preliminary furniture and equipment layouts. Obtain preliminary equipment cut sheets from Equipment Planner for major or unusual equipment.

Coordinate and communicate with security and telecommunications staff, and special systems vendors as appropriate.

Obtain current key plans from FPD.

Provide final schematic plan in electronic format to FPD for room number assignments in a format compatible with the version of AutoCAD in use by UMHHC Facilities Planning and Development. Electronic files submitted for the assignment of room numbers should be at 1:1 scale and should show new work only. Files should include only walls, doors, windows, and room types (names).

Review structural capacity of building for proposed use.

Conduct thorough code analysis. As appropriate, review proposed design with regulatory authorities.

Obtain pre-design air testing if required by CSA worksheet. A/E shall be responsible for coordinating the schedule and any special needs with the UMHHC Building Manager and respective Air Test & Balance Company. A copy of all completed air test and balance reports shall be forwarded in PDF format to FAC-projectdept@med.umich.edu. The e-mail should contain the project RTN #, CBN # (if available), Project Name, building name, building level and room numbers included in report.

At start of Design Development/Construction Document phase, confirm all assumptions in the Investigative Report, including all field observations.

If room configuration changes, obtain revised room numbering from FPD.

Submit Construction Documents to regulatory agencies if required, including BFS and HFES (submittal fees shall be paid by the A/E and listed as reimbursables on the CSA). UMH Design Manager will advise if preparation of the Operational Narrative will be part of the A/E scope of services. For leased buildings, coordinate submission of documents to local regulatory agencies with building owner's representative, who shall pay the plan review fees. Respond to all regulatory agency comments in writing within one week. Copy all transmittals and correspondence with regulatory agencies to Design Manager and Capital Construction for file.

Confirm security system, fire alarm and other special system assumptions made during the Investigation with the appropriate UMHHC staff.

Include a list of all applicable codes and a code analysis summary on the cover sheet of the Construction Documents.

Provide complete hardware sets and specifications, including all electrical hardware and wiring diagrams. A sequence of operation is to be included with all hardware sets.

Provide complete interior finish schedule and finish specifications for all finish materials as selected by Interior Designer.

Refer to and incorporate UMHHC Design Guidelines.

Project manual specifications are typically only required for AEC managed projects. Project manual shall comply with AEC requirements and conform to the 1995 CSI 16-Division format unless directed otherwise.

Minimum Drawing Requirements

All drawings submitted to UMHHC become the property of UMHHC. No drawings submitted at any stage of a project shall be copyright protected.

Standard drawing sheet size is 22"x34" (ANSI D-size). With permission of the UMHHC Design Manager, 30"x42" (E-size) drawings may be used where the UMH standard D-size would require a scale smaller than 1/8"=1'-0" or where the E-size sheet would allow for a complete floor plan on a single sheet. Final deliverables (as-builts) are to be black ink on white paper. Drawings included for reference must have "For Reference Only by RTN #######" stamped visibly on each reference drawing. Drawing sets are to be rolled, printed side out with titleblock visible. For bulletins or addendums, 8-1/2"x11" (A-size) are acceptable where small sizes are applicable. All final (as-built) submittals shall be accompanied with an electronic copy of the drawing(s) conforming to the standards listed herein for submission of electronic drawing files. Electronic drawing files shall include drawing files in both DWG and PDF format. All drawing sets submitted for review and/or construction are to be uploaded to UMHHC's reproduction website (currently Reprographics One - see UMH FPD website for link).

All drawing files issued in PDF format should be printed to black, i.e., no linetypes, equipment, furniture, or any other items shall be illustrated in color.

All drawings, including cover sheet, are to be printed on the UMHHC standard titleblock- see UMH FPD website for standard titleblock.

All lines are to be dark with crisp edges.

All text used on drawings shall be a minimum of 3/32" height (at full size) so that it is legible from a half-size set (i.e. 11"x17" for D-size).

Screening, shading, crosshatching and other indications shall not obliterate underlying information, and shall be capable of being reproduced without "bleeding".

All plans in a given project set are to be oriented in the same direction. In all cases, north is to be "up" or to the right. All plan drawings shall have a north arrow.

All floor plan drawings shall include a small scale building key plan with a shaded "area of work".

Building plans are to show a minimum of two vertical column lines and two horizontal column lines with their associated grid bubbles and identifications. Site plans to show a minimum of two coordinate points, preferably at the lower left and upper right of drawing area.

Base Plan Master Files of UMHHC buildings are located in model space according to UMH's survey grid and are available on FPD's virtual network (if AE does not have access to FPD's virtual network, contact your FPD project manager). AE shall maintain FPD's spatial coordinates so that plan sheets may be inserted as overlays to existing electronic drawings (i.e. plan views in CAD files should line up correctly when brought together electronically). Coordinate points should align in each file.

It is extremely important to field verify all dimensions, existing walls, doors, windows, built-ins, power, communications, fire alarm, special electrical systems, HVAC, plumbing, fire protection, etc. Any discrepancies found during design between actual field conditions and Base Plan Master Files are to be documented on marked up plots of the base plan master file(s) in question and communicated to UMHHC's FPD CAD Coordinator, Facilities Planning and Development, 2101 Commonwealth, Ann Arbor, MI 48105-5759. Project drawings are to reflect actual field conditions.

Include a complete index of drawings on the cover sheet of the drawing set. All drawings, regardless of set size require a cover sheet. On projects with more than 30 sheets, include an index sheet on the first sheet of each series as well (a series is a segment of the drawing set such as the Architectural series or Electrical series). Index is to identify sheet number and title and indicate clearly if a drawing is included only for information and does not show work under the contract.

If drawings are added or deleted during the course of construction, A/E is to revise the index on the Record drawing set accordingly.

Include a complete symbol and abbreviation legend for each series on the first or second drawing of the series. (A series is a segment of the drawing set such as the Architectural series or Electrical series.).

Include a graphic scale bar on each plan drawing. Where scale applies to the entire drawing, the scale references are to be located near the lower right corner of the drawing area.

Where a portion of a plan or elevation appears on a sheet, use a reference keyplan drawing to show location relative to the whole. The preferred location for the keyplan is in the lower right corner of the drawing or in the titleblock area of the drawing, space permitting.

Cross-reference plans, elevations, sections and details. Identify sections on all plans; architectural, mechanical and electrical.

Distinguish clearly between existing, new, and replacement work.

Clear drawings shall be provided, indicating scope of any required demolition and new construction. All floor plan drawings shall include north arrows, graphic scales, and keyplans. Except for keyplans, a minimum scale of at least 1/8" = 1'-0" is required.

Produce drawings using standard AIA layering standards.

Provide proper line weight differentiation to assist in the readability of drawings.

All external referenced materials should have relative references and should be included with the original referenced drawing. If an external reference is not required in a drawing, the reference should be removed.

Utility shutdown information will be shown on the construction documents. Refer to Divisions 15 and 16 Basic Design Guidelines for specific format.

In order to fully coordinate all systems, architectural reflected ceiling plans are required. They are to show all ceiling mounted equipment including: lights, HVAC supply and return, smoke detectors, speakers, owner equipment, access panels, cameras and security devices, exit signs, IV tracks, curtain tracks, signage, (etc.). Generally equipment should be centered in ceiling tiles.

In renovation projects, existing equipment to remain is to be shown. If existing sprinkler heads are anticipated to remain, they must be shown on the reflected ceiling plan.

In order to provide access above the ceiling, care should be taken to provide "free" tiles, particularly below cable trays, filters, and other areas that require on-going maintenance.

For new and existing plans, fire and smoke rated walls and other assemblies are to be indicated clearly on the drawings. Style of drawing linetype symbols shall match the UMHHC Fire Wall Keyplans.

Titleblock Content

Dates Issued: List purpose and date of all issues, including as appropriate, 50% CD, 95% CD, Regulatory Review, Construction and Record Drawings. Every issued document, not submitted for construction or bids, must be labeled "Not For Construction" in the titleblock.

Sheet Number: All drawing numbers are to include a prefix which designates the discipline of work included on the sheet. Examples of appropriate sheet numbers are as follows:

- A-8 Eighth sheet of (A)rchitectural series.
- CL-2 Second Sheet of a series that includes both (C)ivil and (L)andscaping information.
- M-6 Sixth sheet of a series that includes (M)echanical information.

Project Number: Indicate UMHHC project number (RTN # & CBN #). For projects managed by UM/Campus AEC, include AEC "P100" number. The first row under "project number" is to be the UM/Campus assigned number and the second row is to be the UMHHC RTN & CBN#'s.

Sheet Title: A sheet's title should uniquely identify a drawing sheet from others in a set and identify type of drawing using words such as:

- Plan
- Details
- Sections
- Elevations
- Schedules
- Risers
- Schematics

Identify the location. Where the project area requires multiple plan sheets, include unique building, level and zone in sheet title.

Project: UMHHC will provide a specific project name.

Approval/Issuance Area of Titleblock:

Keywords: Identify drawing content with appropriate keywords found in the Disciplines/Keywords table at the end of this document.

Location: Show Building, Level, Zone or other location information which is not already part of the Project Name or Sheet Title.

UM Design Mgr.: Identify the primary University Project Coordinator.

Approved/Checked/Coordination Checked: When submitting to UMHHC any sheet with information not previously submitted, note on one of the issuance lines the purpose of submittal and date (i.e. CONSTRUCTION MM/DD/YY). This applies to design review and contract issuances as well as addenda, bulletins, etc. All such notations of issue are to remain on sheets.

Issues for Dates: All documents issued must have a unique, current date. "Issued for" dates shall be noted as follows:

- Schematic Review (as needed)
- __% DD Review (as needed)
- __% CD Review (as needed)
- 100% CD Review (mandatory)
- Construction (mandatory)

All drawings issued after the construction set shall be noted "Bulletin #__" as directed by Design Manager. All changes shall be "bubbled" and all drawings shall be reissued as a complete set.

Special Notes for Capital Construction (UM Construction Services) CD's

Smaller construction projects are generally managed by UMH FPD Construction Coordinators, constructed by UM Construction Services and do not go out to bid to General Contractors. Consequently, much of the standard boilerplate and notes required for a competitively bid project are not required.

These projects do not need full specifications or after-hours information. They do need to be prepared with standard UMHHC title block 22"x34" (ANSI D.)

These documents should include all information required to order the materials; i.e. manufacturer and model numbers, colors, sizes, etc.

Documents should include phasing drawings and temporary partition locations, as required.

Obtain all finish information from UMHHC Interior Design and put all information on the documents, including manufacturer, model, color name and all model numbers,

Final construction documents are to be submitted in PDF format to the UMH Design Manager and uploaded to the printing vendor.

A/E will submit documents to BFS and HEFS and include plan submittal fees as reimbursable expenses, as required.

At the end of construction phase of the project AutoCAD & PDF file formats are to be provided to FPD.

Backups

A/E's shall retain available backups of electronic files for a minimum of 5 years from the close of the A/E's contract with UMHHC.

Software Platform

Internally, UMHHC Facilities Planning and Development uses AutoCAD. Electronic files submitted to UMHHC FPD shall be in a format compatible with the release in use by UMHHC FPD and in conformance with the standards outlined herein for electronically prepared drawings.

Electronic File Transmission and Requests

Electronic files submitted to UMHHC Facilities Planning and Development are to be submitted in AutoCAD format with one "hard-copy" sheet per drawing file and conform to standards herein for layer names and drawing content. In addition to AutoCAD files, all drawings shall be submitted in PDF format.

Electronic files submitted to UMHHC Facilities Planning and Development for Interior Design use should be at 1:1 scale and show new work only. File should include only walls, doors, windows, room numbers, room types (names) and locations of electrical and data outlets. Doors should be shown at 90 degrees open. Room numbers and room types should be on one layer.

Electronic files submitted to UMHHC Facilities Planning and Development for the assignment of room numbers should be at 1:1 scale and show new work only. File should include only walls, doors, windows, room numbers and room types (names).

Electronic drawing submittals shall not use external drawing references (x-ref). All external referenced materials should be permanently inserted in the drawing file.

Files translated from CAD programs other than AutoCAD shall have all "numbered" layers removed or replaced with appropriate AIA Guideline type layer names and translation routines should be written accordingly.

Electronic files may be transmitted to UMHHC Facilities Planning and Development via e-mail (FAC-projectdept@med.umich.edu), FPD Virtual Network, compact disc or posted to an FTP site accessible to UMHHC FPD except for final deliverables (Record Drawings). Final deliverables (Record Drawings) shall be transmitted on compact disc.

Room Numbering

Room numbering shall generally be provided by FPD.

Guidelines for assigning room numbers for University of Michigan Hospitals and Health Centers:

- UMH standard is a 4 digit room number, with the first digit being the floor. Rooms on floors with a 2 digit floor number (B1, 10, etc.) may have a 5 digit room number
- In a simple building start at the primary entrance and work counter-clockwise around the building with odd numbers on the perimeter and even numbers on the core.
- In a large, complex building with the potential to have more than 1000 rooms on a floor, divide the floor into wayfinding zones, each designated by a letter following the floor number. (Example: 1A101) In such cases, the wayfinding zones should correspond to any breakdowns in architectural construction drawings.
- Reserve numbers ending in 0 and 5 for corridors.
- For rooms where the primary entrance is from within another room, label the room number of the room it opens from with a letter suffix (example: where you get to a manager's office by going through the secretary's office, the secretary office would be 1001 and the manager office would be 1001A). Suites where all rooms open off a central core have the number of the central core room with a letter suffix (example, 1001, 1001A, 1001B).
- While they CAN be used in a large suite for general rooms, try to reserve the following letter suffixes for the following specific room types:
    - C—Communication Closets
    - E—Electrical Closets
    - I—avoid using due to confusion with the numeral 1.
    - J—Janitor Closets
    - M—Mechanical Closets
    - O and Q—avoid using due to confusion with the numeral 0.
    - T—Toilet rooms
    - V—Vertical Shafts
    - X—Stairwells and Elevators
    - Z—Corridors
- The above specific room types must have room numbers with the above suffixes (i.e. corridor 1000Z)
- If a room looks like it could be subdivided in the future, skip a number in the sequence to allow for future expansion.
- In an existing building, for a room that has been created by the dividing of a larger room, follow the pattern discernable from the existing surrounding area.
- If a room has 2 entrances assign the number based on which door is the primary entrance. If neither entrance is "primary", use the lower of the two possible room numbers.
- When a room has been created by combining two smaller rooms, use the lower of the existing room numbers.

Door Numbering

Door numbers shall relate to room numbers.

Disciplines/Keywords

Keywords are used by the UMH Archival Coordinator for archiving and logging each construction document sheet into a searchable software database. The following standard keywords (or combination thereof) shall be utilized on all CD sheets to indicate the sheet's content:

PRIMARY DISCIPLINE	KEYWORD	CONTENT/COMMENT
All disciplines	Demolition	Demolition / Existing conditions
	Details	
	Elevations	Interior or Exterior
	Index	
	New Work	
	Notes	
	Riser	
	Schedules	
	Sections	
	Specifications	
	Symbols	abbreviations, legend, key
	Title	
(A)rchitectural	Conveyance	Elevator / Escalator / RoboCarrier / P-Tube Cars, Tracks, Tubes
	Code	Fire/ Smoke Walls
	Dividers	Floor Plans/Information: Includes Partitions, Architectural Specialties, Interior walls.
	Enclosures	Exterior Walls, Windows, Window/Curtain Walls Roofs, roof stairs, Ladders, Railings.
	Equipment	Fixed, Movable & Misc. equipment.
	Finish	Room finish patterns, paint types
	Furniture	Freestanding, Furniture Systems, Plants. Woodwork, Millwork, Casework, Floor Coverings, Custom Cabinetry
	Phasing	Phasing Plans
	Reflected Ceiling	Grid, Penetrations, Suspended Elements
	Signs	Interior and exterior signs.
(C)ivil	Grading	Grading, Retaining walls, test borings, topographical.
	Roadways	Roads, Parking lots
	Survey	Property lines and survey benchmarks
	Utilities	Storm drainage, catch basins, exterior sanitary sewer, manholes, pumping stations, storage tanks, Site electrical substations and poles, Site communication (under/overhead), Fire hydrants and connections, natural gas manholes, meters, vaults and tunnels.
(E)lectrical	Auxiliary Systems	Lightning protection system, grounding system, Other auxiliary systems.
	Communications	Tel and Communication outlets, Data outlets, Sound or PA systems, TV antenna systems, Closed circuit TV, Nurse Call, Security, Paging systems, Central Dictation Systems, Bell systems, Clock systems, Misc. alarm systems, Intercom systems, Cable trays.
	Controls	Electric control systems, devices, wiring, VSD's
	Lighting	Lighting: special, emergency, roof, site; Switches, circuits
	One Line	
	Power	Panels, power equipment, switchboards, circuits, under floor/carpet raceways/wiring, feeders, busways.
	Receptacles	
(F)ire	Dividers	Firewalls
	Sprinklers	Sprinkler system, Standpipe system
(L)andscape	Improvements	Site improvements: fencing, walls, decks, bridges, pools, sports fields, play structures, site furnishings, telephone booths.

	Irrigation	Irrigation
	Planting	Trees, shrubs, flowers
	Walks	Sidewalks, steps
(M)echanical	Controls	Controls and instrumentation
	HVAC	HVAC Systems, diffusers, sheet metal, piping
	Medical Gas	Medical gas systems, Compressed air
	Special Systems	Special systems, Process systems, Dust and fume collection systems, Fuel system, Refrigeration systems, Snow melt systems.
(P)lumbing	Domestic Water	Domestic hot and cold water systems
	Equipment	Fixtures, Sump pumps
	Special Waste Systems	Acid, Alkaline, Oil Waste systems
	Waste Water	Sanitary drainage, Storm drainage systems, Interior
(S)tructural	Beams	lintels
	Columns	Piles/Piers, Anchors
	Foundation	Slab, deck, concrete
	Framing	wind bracing
	Load	
	Truss	

DESIGN GUIDELINE 2.5
PROJECT ESTIMATES

General

The procedures described in this section pertain to University of Michigan construction projects with a construction cost of $500,000 or more. Though it is not required, it is suggested that the consultant or contractor follow these procedures on the smaller project, as well.

For projects with a construction budget of $5 million or greater, Design Professionals are required to benchmark at least 3 similar projects. The benchmark information will be submitted utilizing the Design Professional Cost Benchmarking Submission form. A Project Data Sheet is included with the form and shall be completed for **each** project that is benchmarked. The benchmarking information will be submitted in tandem with the program phase estimate.

Professionals performing estimating services for Architecture, Engineering and Construction (AEC) are mandated to use the following standard estimating formats.

- *Program Phase:* (Uniformat II) - Estimate Uniformat2.xlsx
- *Schematic Design through Construction Document Phases:* (CSI-2012) - Estimate CSI 2012.xlsx
- NOTE: CSI 2012 = Construction Specifications Institute, April 2012 "*Masterformat*" Specification Categorization

Professionals may complete these templates as provided, optionally using additional "tabs" for more specific levels of detail. NOTE: The Level 1 Summaries are entirely populated with data from the Level 2 Breakdowns. The professional estimator may opt to use proprietary software, provided that the "CSI and Uniformat 2 Level 1 Summaries" and "CSI and Uniformat 2 Level 2 Breakdowns" are formatted to accurately match the AEC templates. In both type estimates, the respective detail sheets relating to the Level 2 Breakdown and thus, the Level 1 Summary, must accompany the estimate and relate specifically to the CSI Masterformat categorizations of which they are intended to be a part. No modification or deviations from the Level 1 template will be allowed. Any advantageous or project-specific changes to the Level 2 template must be submitted to, in writing, and be approved by the AEC Design Manager or Construction Manager, prior to the creation of the estimate.

These templates have been created as "standards" for University of Michigan Project Cost estimate. Compliance with the intent of these templates are a mandate, not an option.

UM Hospitals and Health Centers (UMHHC) projects are exempt from these requirements and shall utilize the standard estimating format template found on the UMHHC Facilities Planning and Development web page.

Execution

Cover Sheet

Every estimate document shall be accompanied by a Cover Sheet or Sheets which include the following information:

- University of Michigan Building Name; Project Name; Brief Project Scope Description; University Project Number
- A List of Documents showing all documents used or referenced as the basis of the estimate. These documents shall include all the following accompanied by their listed dates:
  - Plans
  - Specifications
  - Sketches
  - Gross Area Summaries
  - Site Areas
  - Addendums
  - Meeting Notes
  - Schedules, etc.
- A List of Allowances showing either Lump Sum or Unit Price allowances included within the "*FIXED LIMIT OF CONSTRUCTION COST*".
- Construction start and completion dates upon which the estimate is based.
- A detailed basis used for escalation calculations, i.e., "midpoint of construction".
- A List of Exclusions from the "*FIXED LIMIT OF CONSTRUCTION COST*", examples of which might be
  - Abatement
  - HazMat Removal
  - Utility Services Upgrades (not yet defined)
  - Connection Fees
  - Permit Fees
  - Owner-supplied Equipment
  - Moveable Furniture
  - Testing Fees, etc.
- A List of Clarifications relating to:
  - Incomplete Documents
  - Unusual Circumstances
  - Mitigation of Obvious Document Errors or Inconsistencies
  - Specific Exclusions
  - Allowances, etc.

Templates: Line-Specific Information

CSI & Uniformat 2 **Level 1 Summaries**:

The first portion of the Summary, "*CONSTRUCTION TRADES SUBTOTAL*", [Sections A-G, Uniformat II and 00 00 00 – 33 00 00, CSI 2012] should account for all known direct labor and materials costs based upon applicable local market conditions at the time of the estimate. As noted on the last line of the Level 1 Summary, "*This template includes pre-set formulas,*

however, estimating professionals are ultimately responsible for the accuracy of the information submitted."

The second portion of the Summary, "*TOTAL CONTINGENCY; ESCALATION &; GENERAL CONDITIONS COSTS*", should account for Design Contingency, Escalation, General Conditions, Management Fees, Indirect Costs and Profit. These costs will totaled separately and added to the "*CONSTRUCTION TRADES SUBTOTAL*", to form the "*FIXED LIMIT OF CONSTRUCTION COST*". Separate categories for "*ALLOWANCES*" and "*ALTERNATES*" will be listed and totaled separately. If applicable to the project, these optional costs may then be added to the "*FIXED LIMIT OF CONSTRUCTION COST*" to form the "*TOTAL UPPER LIMIT OF G.M.P.*".

CSI & Uniformat 2 **Level 2 Breakdowns**:

The first eight rows of the Breakdown comprise the input areas of strategic project descriptors, i.e., Project Name, Gross Building and Site areas and Relevant Project Timeline Dates, for use in calculations throughout this worksheet. This section populates the parallel cells on the Level 1 Summary.

For the CSI 2012 estimate, the second section of note is category number "*01 00 00 – GENERAL REQUIREMENTS*". The values of the categories within this breakdown parallel the cost inputs named in the section entitled "*TOTAL CONTINGENCY; ESCALATION & GENERAL CONDITIONS COSTS*", below the "*CONSTRUCTION TRADES SUBTOTAL*". The estimator will populate both of these sections at their own discretion, defining the cost components to produce an accurate total cost for these items. The University expects that estimator will utilize both quantifiable values for specific items or, amounts equaling a historical percentage of the "*CONSTRUCTION TRADES SUBTOTAL*". The estimator will assure that the aggregate costs represented in these two categories do not overlap and represent an accurate portrayal of the expected "*01 00 00 – GENERAL REQUIREMENTS*" costs. This is the same expectation for both General Contract and Construction Management projects.

For the Uniformat 2 estimate, the "*GENERAL CONDITIONS COSTS*" will be carried as an historical percentage of the "*CONSTRUCTION TRADES SUBTOTAL*".

The second section of this Breakdown comprises the categorical summations of the quantities and costs as described in the CSI 2012 *Masterformat* Numbers and Titles. Each line has only two "input" cells, the "*QUANTITY*" and the "*TOTAL DOLLARS*", both of which comprise the automatically-calculated "*AVG PRICE*". Specifically named for each *Masterformat* category, is the "*UNIT*" of measure in which the estimator will describe his "*QUANTITY*" input. [*Outside the right margin of the cost calculation data is a description of each abbreviated "UNIT" of measure*]

The third section of this Level 2 Breakdown comprises the source calculations for the difference between the "*CONSTRUCTION TRADES SUBTOTAL*" and the "*FIXED LIMIT OF CONSTRUCTION COST*". The definitions of the line item descriptions contained therein follow.

- *Design Contingency* – A suitable allowance of cost, based on a "percentage" of the "*CONSTRUCTION TRADES SUBTOTAL*", for items or options not yet fully-designed and which may be incorporated as the design progresses. Typical historical percentages are:

Schematic Design +10%; Design Development +5%; Construction Document +0% to 1%, based on the completeness of the CD documents on which the estimate is based.

- *Escalation* – A suitable percentage of the "*CONSTRUCTION TRADES SUBTOTAL*", based on generally-anticipated cost increases between the date of the estimate and the scheduled Midpoint of Construction. Escalation factors may include: anticipated rates of "Inflation" or local "Market Conditions" affecting the cost of construction. [*Category-specific, anticipated cost increases, due to factors like material or labor shortages, should be accounted for within each specific category number and be noted as such*]
- *Escalation Calculation*: Is defined by the formula: ((1+Annual Rate of Escalation), raised to the power of (Total Days from the estimate date to the midpoint of construction, divided by 365.25 days)) minus 1. This calculation is a mandate, not an option.
- *Escalation Example*: 460 days @ 3% per year: ((1+.03) ^ (460/365.25))-1 = 3.79%. This is the University standard for the calculation of escalation for all projects.
- *CM or GC General Conditions*: These construction-support related costs are described in category number "*01 00 00 – GENERAL REQUIREMENTS*". These costs may be based on a historical percentage at the Schematic Design phase, a combination of quantifiable costs and historical percentages at the Design Development Phase and completely-defined quantifiable costs at the Construction Document / Bid Phase.
- *CM/GC Personnel*: Cost for management staff, during the construction, as described in category number "*01 00 00 – GENERAL REQUIREMENTS*". [*This may include project managers, superintendents, project engineers and estimators*]
- *CM Fee/GC Profit*: Construction Management Company Fee or General Contractor's overhead and profit.
- *Pre-construction Services*: A fee for construction management support prior to commencement of construction. [*This is not applicable to General Contractor project delivery*]
- *CM Contingency*: An agreed-upon percentage of the "*CONSTRUCTION TRADES SUBTOTAL*" for mitigation of unforeseen conditions and other unanticipated costs that may occur during construction. [*This is not applicable to General Contractor project delivery*]
- *Related Construction Cost Allowances*: These costs are identifiable, essential Construction Cost items which may be paid directly by the University, be outside of the contract, or be added to the contract by the University. When these costs are carried as line items within the "*CONSTRUCTION TRADES SUBTOTAL*", they should be identified as "*Related Construction Costs*" of the overall project budget. Beyond the Programming Phase these line items should be moved to "*Related Construction Cost Allowances"*, thus lowering the "*FIXED LIMIT OF CONSTRUCTION COST*". Items in this category should be coordinated with the AEC Design Manager.
- Examples of *Related Construction Cost Allowances* are:
  - University Connection Fees
  - Utility Tie-in Costs and Fees
  - Sidewalk Closures
  - Project-specific Testing, etc.
- When these costs are carried as line items within the "*CONSTRUCTION TRADES SUBTOTAL*", they should be identified as "*Related Construction Costs*" of the overall project budget. Beyond the Programming Phase these line items should be moved to "*Related Construction Cost Allowances"*, thus lowering the "*FIXED LIMIT OF*

CONSTRUCTION COST". Items in this category should be coordinated with the AEC Design Manager.

- *Alternates*: Are individual, independent "*FIXED LIMIT OF CONSTRUCTION COSTS*" for stipulated "Add" or "Deduct" construction items, based on the "*CONSTRUCTION TRADES SUBTOTAL*" for each alternate and the "*TOTAL CONTINGENCY; ESCALATION &; GENERAL CONDITIONS COSTS*", as included in the overall project "*FIXED LIMIT OF CONSTRUCTION COST*".

The CSI 2012 and Uniformat 2 estimate formats are the standard for University of Michigan cost estimate of equal or greater value than $500,000. No modifications to these formats shall be made without the express written approval of the Design Manager or Construction Manager.

MICHIGAN MEDICINE
UNIVERSITY OF MICHIGAN

2101 Commonwealth Blvd, Suite B
Ann Arbor, MI 48105-5759
www.med.umich.edu/facilities/plan/

2.5.1: UMHHC - PROJECT ESTIMATES (SID-P-H)

Related Sections

Basis Guideline: NA
For an explanation of the use of these guidelines, see "Design Guidelines for UMHHC Facilities"

General

Professionals performing estimating services for UMHHC are expected to use the estimating templates as follows:

- Investigations through Construction Document Phases – CSI (Construction Specification Institute) division template

In all cases the respective budget summary and detail sheets should be provided. Any proposed modification or deviations from these templates must be approved by the UMHHC FPD Project Manager prior to the creation of the estimate.

Execution

A coversheet with the following information must also accompany all estimates:

- Project title, description and project number
- Reference to documents that are the basis for the estimate including applicable drawings, specifications, sketches, meeting notes, schedules etc.
- Construction schedule time frame upon which the estimate is based if a schedule is not referenced.
- Clarifications.
- List of exclusions including abatement/removal of hazardous materials, potentially required utility services upgrades that are yet undefined, connection fees, permit fees, owner supplied equipment, moveable furniture, testing fees, etc.

The first portion of the estimate (0-16 CSI format) should account for all known direct labor and materials costs based upon applicable local market conditions at the time of the estimate. Contingency factors, general conditions, management fees, escalation, profit and other indirect costs will be factored in after the direct cost is totaled. Provide a line-specific note for line items where cost is based on an allowance rather than an estimate.

Line Specific Information:

- *99031- CM/GC General Conditions* - Construction support related costs, including trailer, fencing, signage, computers, and printing etc, usually based on a percentage of construction cost. Note that this GC cost is typically itemized under Division 1 "General Requirements" and hence this line is left blank.

- *99042- Pre-construction Services* - A fee for construction management support prior to construction (not applicable to General Contractor project delivery). **Do not use unless directed by UM Proj. Manager.

- *99032- CM/GC Personnel* – Cost for management staff during the construction phase of the project. This may include project managers, superintendents, project engineers or estimators. Note that this CM/ GC cost is typically itemized under Division 1 "General Requirements" and hence this line is left blank.

- *99033- CM Fee/GC Profit* – Construction management or general contractor's profit.

- *99050- Allowances* – Project cost items such as connection fees, sidewalk closure allowances, etc., that will be paid directly by the University, outside of the contract. As an option, these costs can be carried in the construction estimate during programming but should be transferred by the Design Manager into the Total Project Costs of the overall budget by the Schematic Design phase. Once the costs go to Total Project Costs, the fixed limit should be adjusted downward, as appropriate.

- *99090- Alternates* – Full cost for any add or deduct alternate construction items, including direct material and labor costs, plus all other indirect mark-up listed above.

The following costs are **NOT** to be included in the A/E's construction estimate but are rather to be included in the overall project estimate prepared by the UMH Design Manager:

- Contingencies of any kind, including Design Contingency, Construction Contingency or User Contingency.
- Escalation
- Fees paid directly by UMH including Abatement, Utility Service/Connection Fees, Air & Water Testing and Balancing, and Soil/Environmental Remediation.
- A/E or UMH/UM Fees
- Furnishings & Equipment including moveable Medical Equipment, Furniture, Signage and Computers.
- Telecommunication cabling and hardware furnished by UM ITCOM or MCIT.

For projects that require a higher than average contingency or require atypical A/E fees, the A/E is requested to summarize these costs under a coversheet separate from the construction estimate.

DESIGN GUIDELINE 2.6
INSURANCE UNDERWRITER

Design Requirements

FM Global is the property insurance underwriter for the University of Michigan. As such, U-M attempts to comply with FM Global recommendations regarding construction, operation and maintenance of facilities, in an effort to prevent loss through fire, flood, wind etc. FM Global reviews U-M construction project designs with respect to loss prevention. FM Global publishes numerous data sheets to help guide design decision, however, FM is not an authority having jurisdiction (AHJ) with respect to any codes. The U-M Design Manager is responsible for all communications with FM Global.

The Design Manager shall invite FM Global to participate in all Owner reviews (all phases, SD, DD, CD).

OUT TO BID

DESIGN GUIDELINES

1.0 CODES AND REGULATORY AGENCIES

2.0 PROJECT PROCEDURES

3.0 SUSTAINABILITY

4.0 SPECIAL INSTRUCTIONS TO DESIGNERS

5.0 SPECIAL BUILDING AREAS

6.0 TECHNICAL REQUIREMENTS

7.0 MASTER SPECIFICATIONS

8.0 PREFERRED MANUFACTURERS LIST

9.0 STANDARD DETAILS AND SCHEDULES

10.0 CHANGES TO DESIGN GUIDELINES

BUILDING COMMISSIONING

CONTRACTS & AGREEMENTS

2.7 EFFECTIVE DATE

Compiled Design Guidelines by Month and Year

The Design Guideline 2.7 Effective Date for guidelines, is set at the beginning of Design Development for a given project and shall be used for the preparation of construction documents for the project unless noted otherwise.

These Design Guidelines are only for use by consultants and contractors in connection with work performed for the University of Michigan. They are to be used as a guide in the preparation of design documents for University of Michigan construction projects. They are not intended to relieve the designers and contractors from their responsibility to comply with applicable codes and other contract obligations.

The purchasing contract and schedule of project details incorporate the Design Guidelines that are applicable to the project.

- February 2018
- January 2018
- December 2017
- November 2017
- October 2017
- September 2017
- August 2017
- July 2017
- June 2017
- May 2017
- April 2017
- March 2017
- February 2017
- January 2017

CONTRACTOR RESOURCES

OTHER LINKS

- December 2016
- November 2016
- October 2016
- September 2016
- August 2016
- July 2016
- June 2016
- May 2016
- April 2016
- March 2016
- February 2016
- January 2016
- December 2015
- November 2015
- October 2015
- September 2015
- August 2015
- July 2015
- June 2015
- May 2015
- April 2015
- March 2015
- February 2015
- January 2015
- December 2014
- November 2014
- October 2014
- September 2014
- August 2014
- July 2014
- June 2014
- May 2014
- April 2014
- March 2014
- February 2014
- January 2014

- December 2013
- November 2013
- October 2013
- September 2013
- August 2013
- July 2013
- June 2013
- May 2013
- April 2013
- March 2013
- February 2013
- January 2013
- December 2012
- November 2012
- October 2012
- September 2012
- August 2012
- July 2012
- June 2012
- May 2012
- April 2012
- March 2012
- February 2012
- January 2012
- December 2011
- November 2011
- October 2011
- September 2011
- August 2011
- July 2011
- June 2011
- May 2011
- April 2011
- March 2011
- February 2011
- January 2011

- December 2010
- November 2010
- October 2010
- September 2010
- August 2010
- July 2010

© 2018 Regents of the University of Michigan

326 East Hoover, Ann Arbor, MI 48109-1002
Phone: (734) 763-3020
Contact Us

FACILITIES & OPERATIONS
ARCHITECTURE, ENGINEERING AND CONSTRUCTION
UNIVERSITY OF MICHIGAN

Pre-Design Deliverables

June 2017

As part of the deliverables for formal UM review at the end of Pre-Design, the Design Professional shall submit this "Pre-Design Deliverables" document to the University's Design Manager. On the "Pre-Design Deliverables" document, the Design Professional shall indicate the status of each required item (a check mark is interpreted to mean that an item has been included in the deliverables). On or attached to the "Pre-Design Deliverables" document, the Design Professional shall identify all items NOT included in the review package. Note Design Professional shall not contact City of Ann Arbor. Design Manager is the conduit for all communication between Design Professional and user groups, Campus Planning, City of Ann Arbor etc.

Item		Task	Required Yes / No	Date Received	Responsibility	Comment
Real Estate and Regulatory Review	1	Topographic survey required. Obtain Minimum Boundary/ Topographic Survey Requirements			Design Manager	Provide Link to actual topo survey requirements
	2	Identify anticipated impacts to adjacent private property (anticipated grading, staging, vegetation removal or trimming, access needs, utility work) to Campus Planning Prior to proceeding with a design that requires impacts.			Design Manager with Design Professional	Design Manager shall review impacts with Campus Planning early in Pre-design.
	3	Verify title search has been requested to ensure there are no encumbrances that will impact site development.			Real Estate Office requested by DM	Note topographical survey form indicates title search is surveyors requirement to obtain.
	4	Are any impacts to the City Right of Way anticipated (any new or modified drive way cuts, utility installations or connections et al, tree removals?) See City of Ann Arbor Preliminary plan review Check list			Design Manager shall provide City of Ann Arbor checklist	Link to City of Ann Arbor preliminary plan review checklist (on sharepoint)
	5	Related to above, will a temporary or permanent ROW Occupancy Agreement be required?			Design Manager with Design Professional	
	6	Are any temporary or permanent easements required?			Design Manager with Design Professional	
	7	Has a code review been conducted to ensure compliance with applicable regulation for interior and exterior spaces?			Design Professional	Understanding items like fire access limitations, egress issues etc. can more effectively ensure the project is properly programmed and the initial budget does not underestimate these items.

	8	Will new or renovated facility be Bureau Fire Services Compliant?			DM to clarify with user group	
	9	Identify any historically significant features that shall be protected and/ or restored			Design Manager with Design Professional	
UM Master Plan Review	1	Site Planning Principles to help guide the conceptual planning approach have been requested and received.			DM coordinate with Campus Planning (CP)	Site Planning Principles shall be incorporated into Basis of Design (BOD)
	2	Has the Project Team reviewed applicable State, City , UM traffic and transportation plans?			DM coordinate with CP	
	3	Has the Project Team met with CP to review the UM Master Plan to ensure compliance?			DM to coordinate with CP	
Environmental Review	1	Have sustainable goals been established for the project - including opportunities for Stormwater Best Management Practices?			DM coordinate with CP and AEC Sustainability Coordinator - site SD item 3	
	2	Are there any regulated water bodies of the State, wetland, drains and streams within the site boundary?			DM to review with EH&S	
	3	Is site greater than an acre or within 500' of water of the State? A soil erosion and sedimentation control plan may be required.			DM to review with EH&S	
	4	Has Project Team considered a post-construction storm water management plan if size of is greater or equal to an acre?			Design Professional	link to storm water management procedure if earth disturbance is greater than an acre
	5	Has a Floristic Quality Assessment been requested?			Design Professional	
	6	Has a Threatened and Endangered Species report been requested?			Design Professional	
	7	Has a Phase 1 Environmental Assessment been prepared?			DM to review with EH&S	
	8	Has the Project Team consulted existing data or requested a soils survey to determine the presence of contaminated soils or hazardous material?			DM to review with EH&S	

	9	Has the Project Team obtained a Tree Survey and Evaluation? Significant trees as identified in the Tree Evaluation shall be protected per the UM Tree Preservation Policy in design through to construction completion.			DM to contact Grounds Services	
Site	**1**	Has consideration been given to how the proposed building setbacks, drives, walks and parking relate to adjacent campus development (the campus neighborhood)?			DM to coordinate with CP	
	2	Does the site contain existing memorial trees, donor benches, plaques, sculpture, class gifts or the like? If proposing new furniture, specify U-M preferred site furnishings.			DM to coordinate with CP	Early notice is key to planning for preservation, relocation etc.
	3	Will public art be a component of the design of the site and building?			DM to coordinate with CP	Schematic Design Phase
	4	Develop a conceptual level lighting plan, consider light spill to neighbors. For context sensitive lighting consider a photometric analysis.			Design Professional	
	5	Establish site lighting goals, what areas to be illuminated, footcandle targeted goals, types of site lighting fixtures. Pedestrian, Parking etc.			Design Professional	
	6	If Non-Capital Planning project, has project received CEOC/EEDR review & support?			DM to coordinate with CP	
	7	Identify impacts from building/site generated noise, exhaust, shading, window reflections, site lighting, etc. on surrounding properties, and preliminary mitigation measures assumed, e.g. berms, sound attenuation.			Design Professional	

Circulation, Transit, Parking and Building Services	1	Will any existing U-M parking or loading spaces be impacted by the project? Verify any potential Downtown Development Authority (DDA) metered parking impacts.			DM to coordinate with CP	Note: At roughly $75k per removed DDA metered space, this should be considered in the conceptual phase when project goals are being identified and updated as the project evolves.
	2	If parking is to be removed, has the Project Team provided a sound rationale and/ or plan for replacement parking?			DM to coordinate with CP	
	3	Has a traffic survey (including pedestrian counts) been performed to ensure proposed improvements do not negatively impact existing pedestrian, vehicular, transit and parking system?			DM to coordinate with CP	
	4	Coordinate with Building Services for waste management planning			DM	Site item 1j in SD
	5	Loading dock location evaluated including size and weight of trucks making deliveries			Design Professional	
	6	Has an adequate amount of strategically located bike parking been provided?			Design Professional	Evaluate if additional bike parking will be needed. Pre-planning location to be integral to site design is important.
	7	Will the project impact existing transit stops or propose new?			Design Professional	site selection and building entry location may be influenced by transit access
	8	Will project impact ADA egress?			Design Professional	Accessibility is good design and not an after thought
	9	Are any emergency access impacts anticipated?			DM to coordinate with EH&S - Fire Safety	
	10	Consider service vehicle parking need			Design Professional	
	11	Verify Fire Hydrant Coverage.			Design Professional	
Utilities & Infrastructure (U-M and Local)	1	Has a Systems Narrative been developed to ensure plan compliance and to ensure the existing utility systems (storm, electrical, ITCOM, gas, sanitary, domestic water, fire water, chilled water and steam) can support the proposed project requirements?			DM to Coordinate with City and CP	Document in Basis of Design
	2	Will the proposed development impact the existing water service configuration?			DM to Coordinate with City and CP	Link to City of Ann Arbor preliminary plan review checklist (on sharepoint)

	3	Has the Facilities Conditions Assessment (FCA) data base been reviewed by Project Team to determine if there are any deficient items to be picked up and funded within project scope?			DM to Coordinate	
Programming	1	Develop program for building occupancy, including overall square footage, MBC occupancy classification etc.			Design Professional	
	2	review Provost space use guidelines			Design Professional	
	3	Provide square footage estimates of each major space type, e.g. wet lab, dry lab, vivarium, office.			Design Professional	
	4	DG 2.1 Owner Project Requirements (OPR) - Outline Owner's Project Requirement and Basis of Design document providing all the information required in this checklist.			Design Professional	OPR and BOD shall be fully developed during the design phases.
	5	Note if building is a 'High Rise'			Design Professional	
Building Interior and Exterior	1	Describe special occupancy environmental requirements: temperature, humidity, vibration control, acoustical separation, etc. List the specific requirements as best know at this stage.			Design Professional	
	2	Define occupancy types			Design Professional	
	3	Is this a renovation project over $10M construction cost? If so perform pre-construction infrared thermal imaging to detect areas of excess air leakage.			DM	
	4	Describe how the requirements of U-M DG 3.2 will be attained, in particular to achieve energy goals above code.			Design Professional	
	5	Identify proposed location of major M & E equipment, e.g. penthouse			Design Professional	

	6	Provide overview of envelope construction, e.g. curtain wall, mass, frame. Percentage using glass			Design Professional	
	7	Describe envelope enhancements to reduce energy, e.g. additional insulation, overhangs, electro chromatic glass, trombe walls.			Design Professional	
	8	For existing buildings, describe the approach planned to improve the envelope's energy performance.			Design Professional	
	9	For existing bldg.'s, description of how project will accommodate ASHRAE 90.1 energy code requirements for alterations.			Design Professional	
Elevators	1	Determine type of elevator			Design Professional	
	2	Backup power source identified, if required			Design Professional	
	3	Note if any of the elevators will be an accessible means of egress			Design Professional	
HVAC	1	Identify potential system types, multiple options are acceptable			Design Professional	
	2	Identify utilities source: chilled water, gas, steam, etc.			Design Professional	
	3	Identify special HVAC, hydronic, and exhaust systems: process air handlers, process CHW, smoke evacuation systems, laboratory exhaust, etc.			Design Professional	
	4	Identify major special MEP redundancy requirements, e.g. redundant vivarium AHUs on emergency power with dedicated chiller.			Design Professional	
Plumbing	1	Identify potential systems types, multiple options are acceptable			Design Professional	

& Piping	2	Identify utilities source: domestic water, fire protection water, storm, sanitary			Design Professional	
	3	Identify special plumbing and process systems: RO/DI, lab gases, acid waste, etc.			Design Professional	
Fire Protection (Mechanical) - continued Fire Protection (Mechanical)	1	fire suppression - required?			Design Professional	
	2	fire suppression - source			Design Professional	
	3	Identify special fire protection systems			Design Professional	
	4	Is fire pump required?			Design Professional	
Lighting	1	Lighting concepts identified for interior and exterior systems			Design Professional	
	2	Identify target footcandle levels for common space types			Design Professional	
	3	Identify common lighting control strategies			Design Professional	
Electrical Power Distribution	1	Conceptually, identify the approximate service size and from where will it be served (i.e.. campus loop, DTE, other?) Identify ductbank location in relationship to building			Design Professional	
	2	Substation location, in building or adjacent? Accessibility? Does the building need single-ended, double-ended, or multiple substations?			Design Professional	
	3	Note any high voltage or specialty power requirements			Design Professional	
	4	Does the facility require a lightening protection system?			Design Professional	
	5	Note emergency and standby power requirements. Emergency generator, is it needed? If needed consider location and fuel source			Design Professional	

	6	Allocated Space for electrical closets			Design Professional	
	7	Identify what types of loads are emergency and which ones are optional/ standby. Conceptually identify the approximate generator size.			Design Professional	
Fire Alarm and Emergency Communications	1	Determine if a fire alarm system is required.			Design Professional	
	2	Note if MOSCAD system will perform the functions as a Central Station Monitoring facility.			Design Professional	
	3	Identify building entrance selected for emergency response. Note fire alarm panel location.			Design Professional	
	4	Indicate if fire alarm system will be used as a mass notification system.			Design Professional	
	5	Note if project scope will include an Emergency Radio Responder Coverage System?			Design Professional	
	6	Identify if toxic/flammable gas or other special alarm systems are anticipated			Design Professional	
Communications (Including voice, data & video systems)	1	Identify Tele/Data service entrance point into building. BE room location and location of communication duct bank in relationship to the building.			Design Professional	
	2	Are any assistive listening systems required?			Design Professional	
	3	Identify audio/ visual system requirements.			Design Professional	
	4	Allocate space for IT closets			Design Professional	
	5	Note if ERRC system components will be installed in IT closets			Design Professional	
	6	Note if project scope will include a cell phone signal reinforcement system			Design Professional	
Security (including CCTV and Card Access	1	Identify security system needs (security cameras, card access, etc.)			Design Professional	
	2	Note is project scope includes CCTV			Design Professional	

Control Systems)						
LEED and Sustainability	1	Will project pursue formal LEED Certification?			Design Professional	
	2	Create a "simple box" energy model to identify and document energy and water reduction strategies, to include different building orientations. Provide estimated annual energy, Energy Use Index, and energy cost for the building. For buildings with atriums, break out energy, EUI, and energy cost for the atrium portion. Complete the LEED Integrative Process Worksheet to explain baseline assumptions used in the energy model and describe potential load reduction strategies. Provide preliminary peak diversified cooling and heating loads identified by the model.			Design Professional	
		List of project sustainability goals, including LEED, energy conservation measures, and storm water management.			DM coordinate with CP and AEC Sustainability Coordinator	
	3	Complete the LEED Site Assessment Worksheet to explain relationships between site features and how the features influenced the project.			Design Professional	
Cost and Design Timeline	1	provide estimated cost of construction			Design Professional	
	2	provide design timeline/estimated design phase durations			Design Professional	
Notes						

AEC PROJECT MANUAL
DATED *MM/DD/YYYY*
FOR
ELECTRONIC BID SUBMISSION

BUILDING NAME
Building No. 100*XXXX*

PROJECT DESCRIPTION
Bidpack *XX*
U-M Project Number P0000*XXXX*

DESIGN PROFESSIONAL: *DP Name*
DP Address
DP CITY, STATE ZIP

DATE: *MM/DD/YYYY*

AEC PROJECT MANUAL

TABLE OF CONTENTS

SECTION	TITLE
	Title Page
TOC	Table of Contents
ITB	Instructions to Bidders
FOP	Form of Proposal
SGC	*Standard General Conditions Applicable to Projects Where the Owner has Retained the Services of a Contractor http://www.umaec.umich.edu/for-vendors/contracts-agreements/
CSR	*Construction Safety Guidelines http://www.umaec.umich.edu/for-vendors/project-documents/bid-resources/
PWS	Prevailing Wage Schedule

SPECIFICATIONS - CSI DIVISIONS (Refer to Separate Specifications Table of Contents) Dated:*MM/DD/YYYY*

DRAWINGS - (Refer to Separate Drawings Index) Dated:*MM/DD/YYYY*

* View and/or download from website shown. Copy available upon request.

INSTRUCTIONS TO BIDDERS

OWNER: The Regents of the University of Michigan

PROJECT: *Building Name*
Building No. 100*XXXX*
Project Name
Bidpack *XX*

U-M Project No P000X*XXXX*

DESIGN PROFESSIONAL: *DP Name*
DP Address
DP City, State Zip

1. LOCATION OF PROJECT

ADDRESS OF PROJECT

2. ACCEPTANCE OF BID (AWARD)

It is the intent of the Owner to award a Contract to the lowest qualified Bidder provided the Proposal has been submitted in accordance with the requirements of the Bidding Documents and does not exceed the funds available. The Owner shall have the right to waive informalities and irregularities in a Proposal received and to accept the Proposal which, in the Owner's judgment, is in the Owner's own best interests.

The Owner shall have the right to accept Alternates in any order or combination, unless specifically provided in the Bidding Documents, and to determine the low Bidder on the basis of the sum of the Base Bid and Alternates accepted.

The Owner reserves the right to award in part, in whole or not at all.

3. PROPOSALS AND SCOPE

A. The Owner will receive electronically submitted Proposals (or alternatively sealed bids at the option of the Bidder) for work as set forth in the "Invitation for Bid" and until the bid due date and time stated in the Invitation for Bid".

B. Bids that are submitted or that arrive after the time set for the bid opening, as determined by the Owner, shall not be opened or considered. The Owner reserves the right to waive informalities and irregularities in a bid as its interests may require.

C. Proposals are invited for work in accordance with these specifications and the accompanying drawings prepared by the Design Professional.

D. The Proposal must be submitted on forms that are furnished with the documents. The completed forms must not include interlineations, alterations or erasure; and must not contain recapitulation of the work to be done. Proposal dollar amounts must be stated in writing and numeric. In case of a discrepancy between the written statement and the numbers, the written statement will govern. Proposal submitted in any other form will not be considered.

E. Bidders must have a dedicated email address for the Owner's use to electronically transmit bid information to the Bidder, such as the "Invitation to Bid", Addenda announcements, and delivery of the "Notice to Proceed" to the successful Bidder.

Bidders shall submit their Proposals electronically to the ELECTRONIC BID BOX at email address umaecbid@umich.edu. The "subject" line of the email should read:

"BID FOR P0000XXXX DUE: MM /DD /YYYY at _____ PM"

DO NOT USE THE ELECTRONIC BID BOX FOR ANY OTHER PURPOSE OTHER THAN THE PROPOSAL SUBMISSION. At the Bidders option, Proposals may also be submitted by the Bidder in an Opaque sealed envelope and dropped into the bid box located at the Owner's Office of Procurement –Facilities, 326 E. Hoover, Ann Arbor, MI 48109-1002, and addressed as follows:

THIS EVELOPE CONTAINS A PROPOSAL FOR THE PROJECT
BUILDING NAME
PROJECT NUMBER
BIDPACK XX
PROJECT TO BE RECEIVED: _____, 20_____at _____p.m. LOCAL TIME.

SUBMITTED BY: _____
Company Name

F. After the time set for opening of Proposals, no Proposal may be withdrawn for a period of sixty (60) days without consequence. However, any Bidder may withdraw his Proposal prior to the time set for opening Proposals.

G. Unless a bidder is selected to perform part of the work, they are required to destroy all copies of plans within 90 days of the Bid Due Date.

H. The Owner's Standard General Conditions and any other amendments, included herein, by reference or by addendum, govern all operations that are to be conducted in the performance of any contract entered into for the Work described in the Invitation for Bid. The Standard General Conditions are available for examination and download at the Owner's website http://www.umaec.umich.edu/for-vendors/contracts-agreements/, or a hard copy may be requested from the Owner's AEC Project Controls Office.

4. MODIFICATIONS

Any Bidder may modify and resubmit, or withdraw their previously submitted bid prior to the scheduled due date and time without prejudice. Resubmit or withdraw the bid by Email to the ELECTRONIC BID BOX (Email Address: umaecbid@umich.edu).

5. EXAMINATION AND TOUR OF SITE

A. All Bidders are expected to tour the site of the proposed project to acquaint themselves with the actual conditions. Refer to the Invitation for Bid Letter, sent to invitees, for the date, time and location of any required Pre-Bid site tour or orientation meetings scheduled by the Owner.

B. Before submitting a Proposal, each Bidder must inspect the site of the proposed work to arrive at a clear understanding of the actual conditions under which the work is to be done. Bidders will be held to have compared the premises with the drawings and specifications to have satisfied the Bidder as to all conditions affecting the execution of the work.

C. No allowance or extra compensation concerning any matter or thing about which the Bidder might have reasonably been informed through such examination will be allowed.

6. TAXES

Each Proposal submitted must include, and the successful Bidder will be required to pay, all taxes which are levied by Federal, State or Municipal Governments upon labor and materials entering into the Work. If indicated in the Bidding Documents and on the Form of Proposal, the contractor shall pay sales and use tax on equipment or material that is pre-purchased by the owner for installation by the contractor. The Owner reserves the right to require evidence of payment of such taxes prior to final payment.

7. OWNER'S OPTIONS / VOLUNTARY ALTERNATES

Reference in the Bidding Documents to any article, device, product, material, fixture, form, process, or type construction by name, make, type or style will be interpreted as establishing a standard of quality and not as limiting competition. However, substitutions will only be considered through the "Owner's Options/ Voluntary Alternates" provisions of the Bidding Documents as follows:

a) where only one such name, make, type or style is specified in any instance, whether or not followed by the phrase "or other approved", "or equal" or other words to that effect, the contractor's Proposal must be based on the name, make, type or style so specified; and

b) where the Bidding Documents mention more than one name of subcontractor, supplier or process, or more than one name, make type or style of article, material or equipment item, the Contractor's Proposal must be based on one of the named makes, types or styles; and

c) when substitutions are proposed, the Contractor's proposal must clearly state, under the heading "Owner's Options / Voluntary Alternates", the names, makes, types or styles which the Contractor may propose other than those designated in the Bidding Documents together with the proposed cost adjustments, if any.

8. CONTRACT SECURITY

A. The amount contained in each submitted Proposal must include the premiums and all other charges, if any, for the Performance and Payment bonds, each in the full amount of the Proposal sum.

B. The Performance Bond is security for the faithful performance of the contract, and the Labor and Material Payment Bond, including both wages and fringe benefits for subcontractors' employees, as security for the payment of all persons performing labor and furnishing materials in connection with the contract. Bonds must reference the Owner as "The Regents of the University of Michigan" and all bonds and sureties must be acceptable to the Owner.

C. Nothing in these Instructions to Bidders, any Addenda, the Standard General Conditions, the Specifications or Drawings relating to waiver and sworn statements regarding payments make the Design Professional or Owner liable for adequacy of waivers and sworn statements.

9. INTERPRETATION OF DOCUMENTS AND ADDENDA

A. Before the Owner makes the award, neither the Owner nor the Design Professional will give verbal answers to inquiries regarding the meaning of drawings and specifications, or verbal instructions. Any such verbal statements by any persons, prior to the award, are invalid.

B. Any explanation desired by Bidders must be requested of the Design Professional in writing, and if explanation is necessary, a reply will be made in the form of an addendum, a copy of which will be forwarded to each Bidder who has received a set of the Bidding Documents and to such other prospective Bidders as have requested a copy of each addenda.

C. No questions or inquiry relative to interpretation of bidding documents will be entertained within the last three (3) days before the bid due date.

D. All questions and inquiries regarding the Project must be directed to:

Contact Name, Title, Firm Name, and Email Address

DO NOT USE THE ELECTRONIC BID BOX EMAIL ADDRESS FOR ANY INQUIRES REGARDING THE PROJECT.

E. Any addenda issued to Bidders prior to the date and time of receipt of Proposals become a part of the Contract Documents and all Proposals are to include the work described in the addenda. Each Proposal submitted must list all addenda which have been received before the bid due date and time.

10. INSURANCE

The successful Bidder will be required to maintain Commercial General Liability, Auto Liability, Worker's Compensation and other insurance coverages applicable to the project in accordance with Article 11 of The University of Michigan Standard General Conditions. Insurance Policies must adhere to the requirements set forth in Section 11.3 of the Standard General Conditions.

11. NOTICE TO PROCEED

The successful Bidder will be issued a "Notice to Proceed" to indicate the University's intent to award the Contract. This notice will indicate the Contract Sum and will itemize all accepted Alternates and Owner's Options /Voluntary Alternates included in the Contract Sum. Any action taken or costs incurred by the apparent successful Bidder prior to the issuance of the written notice will be at his own risk.

12. TIME OF STARTING AND COMPLETION

The date of the Notice to Proceed shall be the official "date of award" of the Contract. The successful Bidder must furnish the required project specific safety plan, bonds and insurance, to the Owner's AEC Project Controls Office and commence active work on the project, all within ten (10) days after date of official Notice to Proceed, as described above, unless a longer period is stated in the Bidding Documents, and must complete the work within the time stated in the Bidding Documents.

13. DOCUMENTS FOR BIDDING

The Bidding Documents, issued for the use of Bidders and upon which all Proposals are to be based, consist of those listed in the Table of Contents of the AEC Project Manual. If additional documents are required to explain revisions which are made during the bidding period or to give additional information to the Bidders, the Design Professional will prepare such documents in the form of an Addendum with accompanying drawings, if required, and will send copies, through the Owner's AEC Project Controls Office, to all prime Bidders, prior to the date for receipt of Proposals. All Proposals are to include the additional work described and indicated on such documents.

14. FORM OF AGREEMENT

A Purchasing Contract for projects with a Contract Sum of less than Five Million Dollars ($5,000,000), and a Standard Construction Agreement for projects with a Contract Sum equal to or greater than Five Million Dollars ($5,000,000) will be the Form of Agreement.

FORM OF PROPOSAL

OWNER: The Regents of the University of Michigan

PROJECT: Building Name
Building No. 100*XXXX*
Project Description
Bidpack *XX*

U-M Project No. P0000*XXXX*

DESIGN PROFESSIONAL: *DP Name*
DP Address
DP City, State Zip

Name of Bidder _____ **Phone** _____

Address _____ **Fax** _____

_____ **Email** _____

_____

TO: The University of Michigan
Procurement Services - Facilities
326 E. Hoover Ave.
Ann Arbor, Michigan 48109-1002

PROPOSAL

Pursuant to and in compliance with your Invitation for Bids dated _____, and the AEC Project Manual dated _____ relating to the above named project, the Undersigned proposes to enter into an Agreement with the Owner for:

BUILDING NAME
PROJECT DESCRIPTION
BIDPACK XX

Lump Sum Base Proposal:

in accordance with said Bidding Documents for the sum of _____

_____ Dollars

($_____) as the Lump Sum **Base Proposal**.
Please round to nearest dollar

For Unit Price Proposal, use Page FOP-2 for calculation and complete above for Total Base Bid.

UNIT PRICES

This bid schedule of unit prices shall be submitted on the following form as part of the Proposal. Unit prices shall be based on materials completely installed in place and all costs related to construction; including but not limited to general conditions, labor, overhead and profit for general contractor and subcontractors. Failure to fill in all unit prices for all scheduled quantities or alteration of the bid schedule shown may result in disqualification of bidder. In case of discrepancy between the unit prices and the extended amount, unit prices will govern.

The quantities appearing in the bid schedule are approximate and prepared only for comparison of bids. Payment of the Contractor will be made only for the actual quantities of work performed and accepted in accordance with Sections 7.6.2.2 and 9.2 of the Standard General Conditions. Where the quantity of any item of unit price Work differs by twenty (20) percent or more and is materially and significantly different from the estimated quantity included in the bid schedule and there is no corresponding adjustment with respect to any other item of Work, the Contractor or the Owner may make a claim for an adjustment in the unit price, and the corresponding Contract Sum.

The Owner reserves the right to delete one or more line items contained within the bid schedule prior to the award of the project to best meet Owner's requirements.

ITEM	DESCRIPTION	ESTIMATED QUANTITY	UNIT	UNIT PRICE	EXTENDED AMOUNT
				$	$
				$	$
				$	$
				$	$
				$	$
				$	$
				$	$
				$	$
				$	$
				$	$
				$	$
				$	$
				$	$
				$	$
				$	$
				$	$
				$	$
				$	$
				$	$
				$	$
				$	$
				$	$
				$	$
				$	$
				TOTAL BASE BID:	**$**

ALTERNATES

The Owner shall have the right to accept Alternates in any order or combination, unless specifically provided in the Bidding Documents, and to determine the low Bidder or the basis of the sum of the Base Bid and Alternates.

None or

Alternate No. X: Brief Description ADD/DEDUCT:$_____
Please round to nearest dollar

Alternate No. X: Brief Description ADD/DEDUCT:$_____
Please round to nearest dollar

ADDENDA

The Undersigned has included in the Proposal the modifications to the work described in the following addenda received prior to the submission of this Proposal:

Addendum No. _____ Dated _____ Addendum No. _____ Dated _____

Addendum No. _____ Dated _____ Addendum No. _____ Dated _____

Addendum No. _____ Dated _____ Addendum No. _____ Dated _____

Addendum No. _____ Dated _____ Addendum No. _____ Dated _____

(If none have been issued, write "NONE")

OWNER'S OPTIONS / VOLUNTARY ALTERNATES

Under the guidelines of Section 7 of the Instructions to Bidders, "Owner's Options / Voluntary Alternates", we offer the following alternates to the names, makes, types, or styles specified:

ARTICLE, WORK OR PROCESS	SPECIFIED NAME, MAKE, TYPE OR STYLE	ALTERNATE NAME, MAKE, TYPE OR STYLE	ADD	DEDUCT
			$	$
			$	$
			$	$
			$	$
			$	$

Attach additional sheets as necessary

COST OF BONDS

The amount included in this Proposal for Performance and Payment Bonds: $ _____

TIME OF COMPLETION

When the Notice to Proceed is issued by the Owner within 30 days of the bid due date, the undersigned agrees to Schedule and coordinate construction operations to achieve Substantial Completion, in accordance with the U-M Standard General Conditions by the following date: **Day, MM/DD/YR.**

or

The undersigned agrees to schedule and coordinate construction operations to achieve Substantial Completion, in accordance with the U-M Standard General Conditions within _____ consecutive calendar days, Sundays and holidays included, after the date of the Notice to Proceed issued by the Owner.

PROPOSAL GUARANTEE

This Proposal is valid for sixty (60) days from bid due date.

CURRENT EMR

Provide the current Experience Modification Rate(s) for your firm as reported by your insurance provider.

Attach a verification copy on insurance company letterhead with your Proposal response.

Interstate EMR: _____ (indicate "NA" if your firm only works in Michigan)

Intrastate EMR: _____ (for work only in Michigan)

Effective Dates from _____ to _____
MM/DD/YYYY MM/DD/YYYY

UNIT PRICES FOR CHANGES IN THE WORK

The following is to establish unit prices for changes in the work as outlined in Section 7.6.2.2 of the Standard General Conditions (November 1, 2016). The information shall be completed by the bidder and is considered part of the proposal. Unit prices shall be based on the complete installation cost and shall take into account all materials, labor, site conditions, overhead and profit for all contractors involved in the work. These unit prices are to be utilized for both add and deduct in scope. It is the option of the Owner whether or not the submitted unit prices will be accepted and included in the contract. If the unit prices are not accepted, one of the other methods listed in Section 7.6 may be utilized by the Owner, if changes in the work are warranted.

UNIT PRICE XX: Brief Description XX:$_____ /(Unit of Measure)

UNIT PRICE XX: Brief Description XX:$_____ /(Unit of Measure)

EQUAL EMPLOYMENT OPPORTUNITY STATEMENT

The undersigned Bidder warrants that it is an equal opportunity employer and that, during the performance of the Agreement, it will comply with Federal Executive Order 11246, as amended, the Rehabilitation Act of 1973, as amended, and the respective regulations thereunder, and the Michigan Civil Rights Act of 1976.

PROPOSAL SIGNATURE

Date _____ Name of Bidder _____

Signature _____

Printed _____

Title _____

Witnessed in Presence of: Signature _____

Printed _____

Date _____ Title _____

BUILDING NAME
Building No. 100XXXX
PROJECT DESCRIPTION
Bidpack XX
U-M Project No. P0000XXXX

UM AEC - Design Professional Cost Benchmarking Submission

AEC Project Name -

AEC Project Number -

A/E Consultant -

Project Phase -

Date -

No.	Market Sector	Project Type	Institution	Project Name	Union Labor	Project Phase	Construction Start	Construction End	Midpoint of Construction	GSF	Final Const. Cost or Const. Cost plus Contingencies	Const Cost/GSF	Use "Worksheet A" to determine the Regional Adjustment Factor to enter in this column ⇩ REGIONAL ADJUSTMENT FACTOR	Use "Worksheet B" to calculate the Escalation Adjustment Factor to enter in this column ⇩ ESCALATION ADJUSTMENT FACTOR	CALCULATED VALUES: ADJUSTED TOTAL CONSTRUCTION COST	CALCULATED VALUES: ADJUSTED TOTAL CONSTRUCTION COST/GSF	Project Description Notes
UM Subject Project in Planning (Budgeted cost info to compare to benchmarks):																	
	Higher Ed	Renovation - Wet Lab	U of Michigan	Project X	Yes	Design	1/1/2011	1/11/2012	07/07/11	0	$0	#DIV/0!	N/A	N/A	$0	#DIV/0!	Example Description - *Blend of minor & major renovation of 3 floors for wet lab research, office space, toilet rooms and supprt spaces. Reusing majority of casework throughout both facillities. Provide 6,900 sf connector addition between buildings. New gender inclusive toilet rooms, elevators and upgrading building systems.*
Project Benchmarks Comparisons (Include a Project Data Sheet for each Benchmark Comparison listed below):																	
1	Higher Ed	Renovation - Wet Lab	University A	Project B	Yes	Complete/ Fin Closed	1/1/2011	1/1/2012	07/02/11	0	$0	#DIV/0!	0.0%	0.0%	$0	#DIV/0!	
															$0	#DIV/0!	
															$0	#DIV/0!	
															$0	#DIV/0!	

Additional Notes

Enter Year Escalated to for Project Benchmarks

If applicable, provide breakdown of Program Area

GSF New/Addition

GSF Renovation

Form Date: 12/8/2017

SOIL BORING REPORT REQUIREMENTS

PROJECT NAME AND NUMBER:

PROPOSAL DUE DATE:

REPORT DUE DATE:

DESIGN ENGINEER / ARCHITECT:

BACKGROUND INFORMATION:
Proposed development will be…*building description, with desired construction period loading, foundation bearing elevation, building foundation loading and hard surface site development.*

Proposed soil boring locations are as indicated on attached site drawing. Allowable access routes to soil boring locations are also indicated on attached drawing.

GEOTECHNICAL WORK REQUIREMENTS:

1. Geotechnical work is to be performed by qualified personnel under the supervision of a registered professional engineer.

2. The location, number and depth of soil borings are to be determined by the geotechnical engineer based upon provided information and site inspection, and are to be identified in the proposal.

3. The geotechnical engineer is to call Miss Dig (811) and to obtain information regarding existing buried utilities in the area of soil borings, and is to take necessary precautions to ensure safety and to prevent damage to property.

4. It is the responsibility of the geotechnical engineer to provide field surveying necessary to properly locate and set the elevation of each boring.

5. Before commencing work, the geotechnical engineer is to coordinate the date and time of drilling with the Owner.

6. Soil drilling and sampling is to be in accordance with current applicable ASTM standards.

7. Soil borings are to be plumb.

8. Following completion of soil boring work, the site is to be restored. Restoration work is to include backfilling borings, patching of slabs and pavements, and repair of lawn and plantings. All excess material is to be removed from the site.

9. After obtaining field information and after completing laboratory testing and analysis, provide a geotechnical report to the Owner and to the design professional. Geotechnical design report is to include the following:

a) Discussion of the proposed project.

b) Soil boring logs with soil description, groundwater observations, sample type, standard penetration values, and moisture content.

c) Foundation design recommendations. To include allowable bearing pressures, recommended bearing elevations, anticipated settlements, and coefficient of friction for pile foundations.

d) Probability of encountering rock formations, and recommendations for excavating rock materials.

e) Design coefficients for use in seismic analysis per current building codes.

f) Frost penetration depth and effect.

g) Recommendations for management of ground water.

h) Fill material recommendations and compaction requirements for structures and pavements.

i) Design and inspection criteria for temporary excavation protection, including earth retention, underpinning of adjacent structures and dewatering.

j) Stability of slopes for excavations.

k) Analysis of soil to ascertain the presence of potentially expansive, deleterious, chemically active or corrosive materials or presence of gas.

l) Other geotechnical recommendations specific to the project.

Address Proposal to: James Bruce, Construction & MRO Commodity Manager
University of Michigan
326 East Hoover Avenue, Mail Stop D
Ann Arbor, MI 48109

Minimum Soil Infiltration Testing Requirements

PROJECT NAME AND NUMBER:

PROPOSAL DUE DATE:

REPORT DUE DATE:

DESIGN ENGINEER / ARCHITECT:

BACKGROUND INFORMATION:

Proposed infiltration locations are as indicated on attached site drawing. Allowable access routes to infiltration locations are also indicated on attached drawing if infiltration locations are not easily accessible or require designated routes.

GEOTECHNICAL WORK REQUIREMENTS:

1. Geotechnical work is to be performed by qualified personnel under the supervision of a registered professional engineer.

2. The geotechnical engineer is to call Miss Dig (811) and to obtain information regarding existing buried utilities in the area of soil borings/infiltration tests, and is to take necessary precautions to ensure safety and to prevent damage to property.

3. Before commencing work, the geotechnical engineer is to coordinate the date and time of drilling with the Owner.

4. The boring depths will extend past the bottom elevation of the proposed infiltration area noted on the location drawing*. Perform continuous sampling from the ground surface to depth of boring. Record groundwater levels in the borings during and immediately after drilling.

   *If infiltration testing is to be performed through a borehole, a preliminary bore should be performed adjacent to the anticipated infiltration bore. This preliminary bore should extend to at least 3ft below the anticipated testing depth. The infiltration testing borehole shall be to the depth of the proposed bottom elevation of the infiltration system.

5. At least 2 bores (more on large sites or sites with complex stormwater management systems) shall extend to at least 10 feet beyond proposed infiltration bottom elevation in and near the infiltration area to verify soil strata below the infiltration area and depth to water table.

6. If suitable infiltrating soils are not found at potential infiltrating depths indicated in the graphic but are identified at other depths during soil boring operations, consult U-M Design Manager on adjusting soil infiltration testing depths based on actual soil conditions. In all cases, provide soil borings at least three (3) feet below anticipated infiltration to identify soils and verify there are no potential water table limitations.

7. Perform double ring infiltrometer infiltration tests (or other similar method such as double well casing down a borehole) according to the Low Impact Development (LID) Design Manual for Michigan developed by SEMCOG at the depth of the bottom of the proposed infiltration feature.

8. Summarize findings in a letter that will include:
    a. A boring diagram
    b. A log prepared for each boring that will include a description of the soils encountered and the results of the field and laboratory tests
    c. A description of the site conditions and evaluation procedures
    d. Specific details regarding the soil and groundwater conditions encountered in each of the borings
    e. A description of the field and laboratory testing programs and an interpretive analysis of the results
    f. An estimated permeability rate of the subgrade soils (e.g., inches per hour) based on the results from the infiltration testing and the boring logs
    g. A table with Boring #, Test depth, soil at base of infiltration testing, duration of test, estimated field measured infiltration rate (inches/hour), recommended design infiltration rate
    h. Geotechnical consultant's recommendation of design infiltration rate per hour for storm water management design and calculations is to be based on a minimum factor of safety of at least two (2) applied to the measured infiltration rate according to the Low Impact Development (LID) Design Manual for Michigan and is to be stated as such
    i. Geotechnical Consultant's professional opinion if soils are not suitable for infiltration

ASSUMPTIONS:

The following assumptions are made regarding scope of services and professional services fee:

1. U-M will provide right-of-entry for Consultant to conduct the evaluation.
2. Consultant will contact Miss Dig to clear and mark the location of public underground utilities at the site prior to performing the field exploration.
3. Consultant will stake the boring locations at the time of the field exploration.
4. *Location is or is not (edit) accessible for truck mounted drill rig.*
5. Field services will be performed by consultant Monday through Friday during normal business hours unless prior arrangements have been made to accommodate project needs. *(Verify)*
6. Care will be exercised to reduce potential damage to existing ground surface areas during the field exploration. *____(insert)_____ will repair damaged landscaping. Pavement cores are required to be reinserted or backfilled with cold-patch material to avoid trip hazards.*

7. Soil boring cuttings shall be placed back in the borehole to the best extent possible. Remaining cuttings should be dispersed on-site if possible, in such a manner as to not cause sediment discharge from the site (i.e., not on impervious surfaces). If cuttings are from a site of known contamination, please contact the U-M Project Manager for guidance.

Address Proposal to: James Bruce, Construction & MRO Commodity Manager
University of Michigan
326 East Hoover Avenue, Mail Stop D
Ann Arbor, MI 48109

AEC STORMWATER MANAGEMENT PROCEDURES-ABBREVIATED

1. PRE-DESIGN PHASE

Kickoff Meeting

- ***Note:*** *storm water goals are set at programming phase.*
- Discuss U-M storm water management plans and requirements (umstormwaterplanning@umich.edu)
- Best Management Practices (BMPs)
- Discuss maintenance concerns and stormwater outlet
- Confirm minimum soil boring/test pit requirements
- Review regulatory requirements

Soils Evaluation

- Geotechnical firm to determine site's suitability for retention (infiltration)
- Soil borings and infiltration testing to be performed at potential design depths
- Deep borings to be performed for investigation of soil composition and identification of water table

Preliminary Basis of Design (BOD)

- Project Team to create and document evolution of storm water management strategies:
  - Project name/number
  - General site description
  - Map with drainage boundary, including off-site drainage impacts
  - On-site drainage infrastructure
  - Adjacent projected drainage impacts
  - Water table elevation
  - Status of presence of known contaminated soils
  - Soil characteristics data
  - Evaluate drainage outlet capacity
  - List of preliminary BMP options with cost/benefits identified. Recommend viable options to pursue.

Meeting Minutes

- Project Team to record and distribute meeting minutes, including documenting action items/decision points

2. CONCEPTUAL DESIGN

Preliminary Basis of Design

- Update information to include:
  - Limit of total earth disturbance
  - Volume of runoff (CF) generated on-site to be managed for multiple storm events
  - Brief drainage narrative describing proposed system
  - Infiltration/retention options
  - Feasibility of on-site infiltration/retention to meet permit requirements and effectively manage storm water or other options to be considered
  - Conceptual design storm water management target volume calculations (permit requirements and 100-year/24-hr storm event)
  - Potential options for managing storm water preliminary volume calculations for each option and at various storm events
  - ***Above and beyond:*** Identify opportunities for maximizing storm water on-site infiltration
  - Indicate and address existing site flooding issues
  - Verify no impacts to upstream, downstream, adjacent properties - identify need for no rise analysis
  - Expand and update BMP list with calculations
  - Conceptual layout for storm water management options and proposed drainage collection system

Meet With Storm Water Team

- Project Team and Storm Water Team to review information and determine best approach to schematic design
- Initiate internal review of regulatory requirements (City of Ann Arbor or Washtenaw County)

Meeting Minutes

- Project Team to record and distribute meeting minutes, including documenting action items/decision points

3. SCHEMATIC DESIGN

Soils Evaluation/ Verification

- Infiltration testing to be performed at actual storm water infiltration proposed design locations and design depths

Update Basis of Design

- Update BOD to include:
  - Proposed topography to be affected by construction
  - Storm Water Management Plan incorporating post-construction permit requirements, BMPs and Soil Erosion and Sedimentation Control Procedures (SESC)
  - Schematic design layout for drainage collection system
  - Calculations used in designing storm water management systems components
  - Update cost/benefit analysis
  - Overall storm water management system (grading plan)

Meet With Storm Water Team

- Review plan refinements and calculations
- Review preliminary submittals (plans, and calcs with narrative) for regulatory requirements
- Follow U-M plan format for storm water management

Meeting Minutes

- Project Team to record and distribute meeting minutes, including documenting action items/decision points

4. DD, CD, CONSTRUCTION AND POST CONSTRUCTION

Update Basis of Design

- Update BOD
- Provide storm water management plans meeting U-M and regulatory format for graphics, narrative, and calcs

Meet With Storm Water Team

- Meet with Storm Water Team as necessary and if there are changes to storm water management approach

AEC Project Review

- Follow AEC plan review process
- Follow post-construction storm water permit requirements
- Follow SESC design requirements

Regulatory Agency Submittal

- Follow AEC requirements for City of Ann Arbor plan submittal
- Work with EH&S and Storm Water Team if external agency regulatory requirements

Meeting Minutes

- Project Team to record and distribute meeting minutes, including documenting action items/decision points

Complete Storm Water Management Procedure is available here.

Example summary storm water narrative for plan sheet – New connection to City system

The narrative is to be updated to be project specific, especially areas in yellow

STORM WATER NARRATIVE:

1. A NEW CONNECTION TO THE CITY STORM SEWER SYSTEM IS PROPOSED.
2. PROPOSED EARTH DISTURBANCE IS _____SF (_____ACRES.)
3. U-M NPDES PERMIT POST-CONSTRUCTION STORM WATER RAIN EVENT REQUIRES A MINIMUM USE OF THE RAIN DATA CONTAINED IN THE RAINFALL ATLAS OF THE MIDWEST, NOAA–1992. CALCULATIONS FOR THIS PROJECT *pick one* (ARE BASED ON THE RAINFALL ATLAS OR THE MIDWEST, NOAA-RAIN DATA) *or* (EXCEED THE PERMIT REQUIREMENT BY USING THE NOAA 2014 RAIN DATA)
4. EXISTING CONDITIONS STORM WATER SUMMARY (SEE SHEET CXX SUPPORTING CALCULATIONS):

   EXISTING DRAINAGE IS OVER LAND IN A NORTH AND WEST DIRECTION TOWARD THE NORTHWEST CORNER OF THE SITE. THE DRAINAGE FLOWS INTO THE RAILROAD DRAINAGE DITCH AND TO THE NORTH, WITH ULTIMATE DISCHARGE TO THE ALLENS CREEK DRAIN.

   EXISTING LAND USE SUMMARY

COVER TYPE	AREA (AC)	C	CN
GRAVEL PARKING	1.12	.85	85
OPEN SPACE (LAWN)	.88	.25	61
TOTAL	2.00	.59	74

   EXISTING RUNOFF VOLUME = 3,484 CF
   EXISTING PEAK RUNOFF RATE = 0.344 CFS
   (VOLUME AND RATE SHOWN FOR 2-YR/24-HR STORM PER U-M CALCS PROVIDED ON SHEET CXXX)

5. PROPOSED CONDITIONS STORM WATER SUMMARY (SEE SHEET CXX SUPPORTING CALCULATIONS):

   A NEW CONNECTION TO THE CITY STORM WATER SYSTEM IS PROPOSED. PROPOSED STORM DRAINAGE WILL BE DIRECTED INTO THE CITY'S STORM SEWER SYSTEM LOCATED IN THE NORTHEAST CORNER OF THE SITE BY CONNECTION TO THE EXISTING CITY STORM MAN HOLE. IN ACCORDANCE WITH U-M REQUIREMENTS, THE FIRST FLUSH VOLUME CALCULATED PER U-M NPDES PERMIT REQUIREMENTS WILL BE DISCHARGED THROUGH AND RETAINED IN AN INFILTRATION SYSTEM AT THE SOUTH END OF THE SITE. THIS FF VOLUME IS 6,647 CUBIC FEET AND EXCEEDS THE CITY'S FF REQUIREMENT OF 3,013 CF. WITH CITY FF REQUIREMENTS ACCOMMODATED WITHIN THE INFILTRATION SYSTEM, THE CITY'S DETENTION REQUIREMENTS WILL BE A TWO-STAGE SYSTEM, ACCOMMODATING THE BANKFULL AND DETENTION VOLUME REQUIREMENTS (LESS THE VOLUME ACCOMMODATED WITHIN THE INFILTRATION SYSTEM). THE PROPOSED STORM SYSTEM IS ROUTED THROUGH A TREATMENT UNIT AT THE NORTH END OF THE SITE PRIOR TO ENTERING THE UNDERGROUND DETENTION PIPING AND ULTIMATELY DISCHARGING INTO THE CITY STORM SEWER SYSTEM.

PROPOSED LAND USE SUMMARY

COVER TYPE	AREA (AC)	C	CN
PAVING/ROOF	1.12	.95	98
OPEN SPACE (LAWN)	.35	.25	61
TOTAL	2.00	.83	91

PROPOSED RUNOFF VOLUME = 10,091 CF
PROPOSED PEAK RUNOFF RATE = 0 CFS (INFILTRATION WITH NO DISCHARGE)
(VOLUME AND RATE SHOWN FOR 2 YR, 24-HR STORM PER U-M CALCS PROVIDED ON SHEET CXXX)

6. CHANNEL PROTECTION

U-M NPDES PERMIT
REQUIRED: 6,647 CF OF RETENTION
PROVIDED: 6,784 CF WILL BE PROVIDED WITHIN INFILTRATION CHAMBERS ON THE SOUTH END OF THE SITE
ELECTIVE: NOTE VOLUME AND LOCATION OF ANY ELECTIVE MEASAURES THAT EXCEED WHAT IS PROVIDED TO MEET REQUIRED VOLUME

CITY OF ANN ARBOR
REQUIRED:
100-YR DETENTION = 21,967 CF (SUBTRACT 6,784 CF OF RENTENTION PROVIDED) = 15,183 CF
BANKFULL FLOOD VOLUME = 13,558 CF (SUBTRACT 6,784 CF OF RENTENTION PROVIDED) = 6,774 CF
FIRST FLUSH (FF) VOLUME = 3,013 CF (SUBTRACT 6,784 CF OF RENTENTION PROVIDED) = NO FURTHER REQUIREMENTS
PEAK RUNOFF RATE = 0.30 CFS (0.15 CFS/ACRE FOR 2 ACRES)

PROVIDED:
RETENTION = 6,784 CF WILL BE PROVIDED WITHIN INFILTRATION CHAMBERS ON THE SOUTH END OF THE SITE
DETENTION = 15,168 CF WILL BE PROVIDED WITHIN DETENTION PIPING ON THE NORTH END OF THE SITE

ELECTIVE: ADDITIONAL NON-PERMIT REQUIRED INFILTRATION/DETENTION WILL BE PROVIDED WITHIN THREE INFILTRATION GARDENS LOCATED THROUGHOUT THE SITE, TREE WELLS ON THE EAST, AND A DETENTION POND ON THE NORTHWEST CORNER OF THE SITE. VOLUMES FOR THE 2 YEAR/24-HR STORM EVENT USING NOAA 2014 RAIN DATA FOR EACH ARE THE FOLLOWING:

Elective BMP #1, such as INFILTRATION GARDEN	XXXXX CF	INFILTRATION
Elective BMP #2 title	XXXXX CF	INFILTRATION
Elective BMP #3 title	XXXXX CF	INFILTRATION
Elective BMP #4 title	XXXXX CF	INFILTRATION
Elective BMP #5 title, such as DETENTION POND	XXXXX CF	DETENTION

7. MINIMUM TREATMENT VOLUME STANDARD – TSS REMOVAL

   THE MINUIMUM QUALITY TREATMENT IS DESIGNED TO REMOVE 80% OF THE TOTAL SUSPENDED SOLIDS (AS COMPARED TO UNCONTROLLED RUNOFF) FOR 90 % ANNUAL NON-EXCEEDENCE STORMS.

   REQUIRED: QUALITY TREATEMENT FOR ___CF OF WATER WITH ____ TIME OF CONCENTRATION AND PEAK DISCHARGE OF ___CFS.
   PROIVDED: TWO STORM WATER TREATMENT UNITS ARE PROPOSED AND WILL BE EITHER CONTECH CDS UNIT OR AQUASWIRL BY AQUASHIELD (MODEL TO BE DETERMINED). THE UNITS WILL BE SIZED TO MEET THE REMOVAL AND PEAK DISCHARGE FLOW CRITERIA.

8. THE PROJECT WILL BE DESIGNED TO MEET THE U-M POST CONSTRUCTION NPDES PERMIT if required (AND CITY or COUNTY STORM WATER) REQUIREMENTS.

9. CONSTRUCTION AND OPERATION OF THE STORM WATER INFILTRATION AND DETENTION POND (AND OTHER BMP'S) ARE IN COMPLIANCE WITH THE REQUIREMENTS OF STATE AND FEDERAL WATER POLLUTION CONTROL LAWS.

EXAMPLE #1

For projects less than one acre and no new connections to the City/County storm sewers

Storm Water Notes:
1. No new connections to city storm sewer systems are proposed.
2. Proposed earth disturbance is _____SF (_____ acres).
3. U-M NPDES permit post-construction storm water management requirements are not applicable since the proposed earth disturbance is less than one acre.

Show chart of with change in impervious -see attached example chart. Increase in impervious must be reviewed/approved by U-M Campus Planning and project team may be directed to design additional storm water management BMPs.

Provide a list of elective storm water BMP's to be installed and quantify benefits, if feasible.

Include the language: "Construction and operation of the storm water (infiltration/detention pond) or (BMP's on the plans) is/are in compliance with the requirements of State and Federal water pollution control laws."

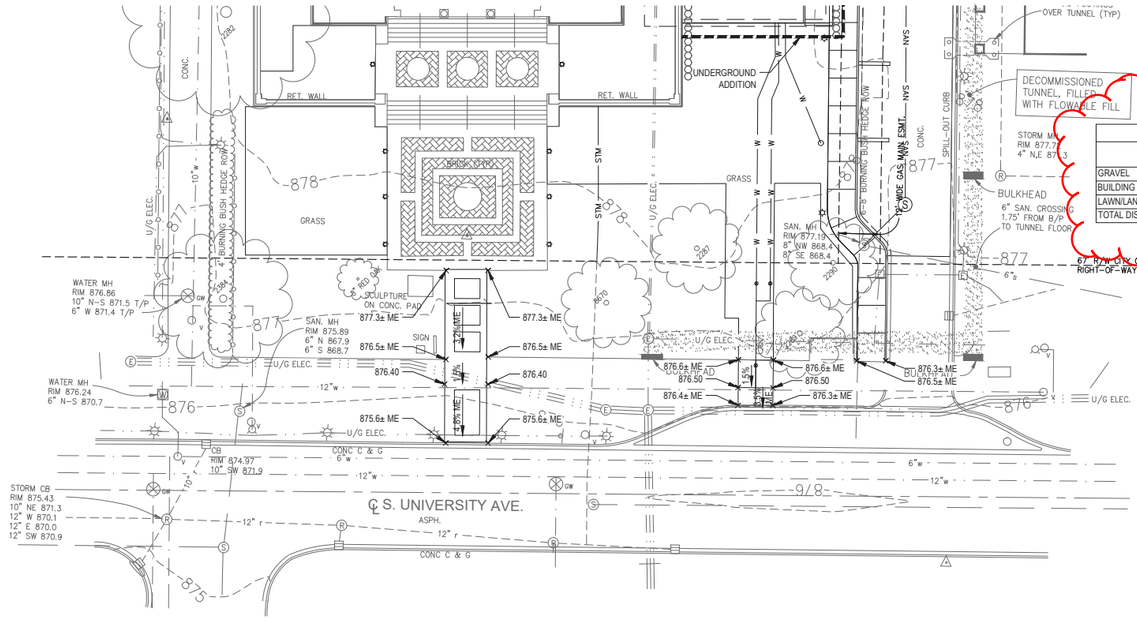

AREA COMPARISON (TOTAL SITE)		
TYPE	EXISTING AREA (SF)	PROPOSED AREA (SF)
GRAVEL	865	0
BUILDING ROOF/PAVING	18,655	15,285
LAWN/LANDSCAPE	21,193	25,428
TOTAL DISTURBED AREA	40,713	40,713

GRADING & DRAINAGE LEGEND

- STM — STORM SEWER PIPING
- W — WATER MAIN PIPING; SEE CU1.1
- 800 — MAJOR CONTOUR LINE
- 800 — MINOR CONTOUR LINE
- 800 — EXISTING CONTOUR LINE
- 800 — SPOT ELEVATION
- 1% — GRADE

GRADING & DRAINAGE ABBREVIATIONS

G = GUTTER
ME = MEET EXISTING
T/C = TOP OF CURB

Replace chart with format matching example chart below

Area Comparision (for earth disturbance)			
Type	CN	Existing Area (sf)	Proposed Area (sf)
Gravel	85	3500	0
Bldg Roof/Pavement	98	3000	3500
Lawn/Landscaping	61	6500	8000
Pervious Pavement	79.5	0	1500
Total Disturbed area		13000	13000
Total Impervious		6500	3500
Composite CN		76	73

SMITHGROUP JJR
500 GRISWOLD
SUITE 1700
DETROIT, MI 48226
313.983.3600
www.smithgroupjjr.com

3 WORKING DAYS
BEFORE YOU DIG CALL MISS DIG
800-482-7171
(TOLL FREE)

PROJECT NORTH

BENCH MARK | SURVEY BOOK

REV. NO.	DESCRIPTION	DATE	DR.BY	CH.BY
1	CD FINAL REVIEW/CITY PLAN REVIEW	10/3/13	JBW	JBW
0	CITY PPR SUBMITTAL	8/23/13	JBW	JBW

PROJECT MANAGEMENT - PUBLIC SERVICES - CITY OF ANN ARBOR

UNIVERSITY OF MICHIGAN
WILLIAM L. CLEMENTS LIBRARY INFRASTRUCTURE IMPROVEMENTS AND ADDITION
UM PROJECT NUMBER: P00001692
RIGHT OF WAY GRADING PLAN

APPROVED BY _____

SCALE HORIZ. 1"=20' VERT. 1"=2' | INCH 0 1
DRAWING NO. CG1.1
SHEET NO. ____ OF ____

FILE: \\dt-file1\Projects\22239.000\CAD\c\sht\22239-GRAD.dwg USER: jwywcot DATE: Oct. 03, 2013 TIME: 12:30 pm

EXAMPLE #2

Greater than an acre, new connection to the City System

UNIVERSITY OF MICHIGAN

ATHLETIC DEPARTMENT OPERATIONS CENTER

PRELIMINARY SITE PLAN REVIEW

UM AEC Proj No #: P00008399;

THE UNIVERSITY OF MICHIGAN
ATHLETICS DEPARTMENT
ANN ARBOR, MI 48105

For City projects only - Title Sheet Listing type of City Review

THE UNIVERSITY OF MICHIGAN
Architecture, Engineering and Construction
University Architect's Office
326 E. Hoover Ave.
Mail Stop E
ANN ARBOR, MICHIGAN 48109-1002

NIAGARA MURANO
ARCHITECTURE
2215 COLE STREET
BIRMINGHAM, MICHIGAN 48009
TELEPHONE: 248.646.5765
FACSIMILE: 248.646.5813

Architect's Project No. - 13144.0

SPALDING DEDECKER ASSOCIATES, INC.

SPALDING DEDECKER ASSOCIATES
905 SOUTH BOULEVARD EAST
ROCHESTER HILLS, MI 48307
P (248) 844 - 5400

C I V I L

T-1C	COVER SHEET
C001C	TOPO SURVEY
C002C	DEMOLITION PLAN
C101C	SITE PLAN
C102C	UTILITY PLAN - RIGHT-OF-WAY
C103C	PAVING PLAN - RIGHT-OF-WAY
C104C	STORMWATER MANAGEMENT SUMMARY SHEET
C104AC	STORMWATER MANAGEMENT PLAN
C104BC	STORMWATER MANAGEMENT DETAILS
C105C	FIRE SAFETY SITE PLAN

VICINITY PLAN

SCALE: NTS

UNIVERSITY of MICHIGAN
UM Athletic Department
Operations Center
ANN ARBOR, MICHIGAN
48105

W O R K S C O P E

NEW OPERATIONS BUILDING
INCLUDES ADMINISTRATION OFFICES, LAUNDRY FACILITIES, ATHLETICS GENERAL STORAGE, LOADING DOCK AND A MAINTENANCE SHOP FOR MINOR REPAIRS. THESE REPAIR FUNCTIONS MILLWORK, WELDING, PAINTING AND SMALL EQUIPMENT. THE BUILDING IS APPROXIMATELY 18,500 SF OF SPACE. THE BUILDING IS STEEL FRAMED W/ INSULATED METAL PANEL AND INSULATED MASONRY VENEER WALLS. INTERIOR FINISHES INCLUDE CMU, GYPSUM BOARD, CEILINGS ARE EXPOSED METAL DECK PAINTED.

issue:	date:
City Site Plan Review	April 28, 2014
Prelim. City Site Plan Review	March 19, 2014
Owner Review	Feb 19, 2014
DD Review	December 20, 2013
SD Review	November 27, 2013
Owner Review	October 28th 2013
Owner Review	October 28th 2013
Owner Review	October 21st 2013
Owner Review	October 9th 2013

University of Michigan

submitted to: HFES	NO BFS NO
AEC constr mgmt no.	P00008399
building no.	-
designed	David B
drawn	SB, RHS & GG
coordination checked	John K.
checked R Sherman	approved John K.
um design manager	
location	UM Athletic Ops Center
keywords	TITLE

project:
UM Athletic Department Operations Center

sheet title:
PRELIMINARY CITY SITE PLAN REVIEW

project number: UM AEC : P00008399

sheet number: T-1C

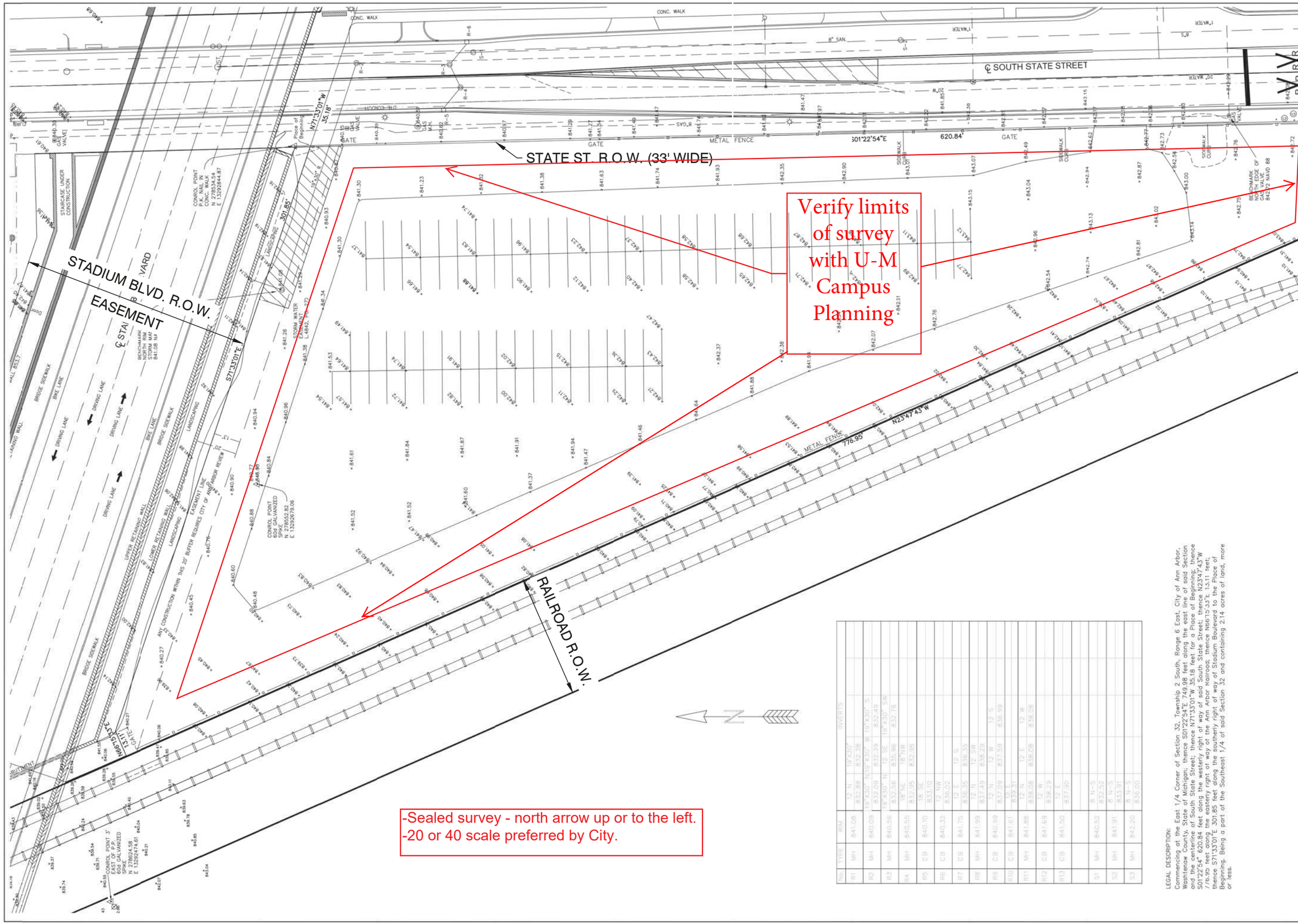

No.	TYPE	RIM	INVERTS		
R1	MH	841.08	12 N	19'X30"	
			832.88	832.38	
R2	MH	840.09	19'X30" N	19'X30" W	19'X30" S
			832.09	832.39	832.49
R3	MH	840.56	19'X30" N	12 SE	19'X30" SW
			832.56	835.96	832.76
R4	MH	840.55	18"NE	18"NW	
			832.95	832.95	
R5	CB	840.10	18 SE		
			833.10		
R6	CB	840.32	12 NW		
			836.02		
R7	CB	841.75	12 E	12 S	
			836.35	836.35	
R8	MH	841.99	12 N	12 SW	
			837.49	838.29	
R9	CB	840.99	12 N	12 W	12 S
			837.09	837.59	836.99
R10	CB	841.61	12 E		
			839.31		
R11	MH	841.88	12 N	12 E	12 W
			838.08	838.08	838.08
R12	CB	841.69	12 W		
			838.29		
R13	CB	841.50	12 E		
			837.90		
S1	MH	840.52	8 N-S		
			832.52		
S2	MH	841.91	8 N-S		
			833.91		
S3	MH	842.20	8 N-S		
			836.00		

LEGAL DESCRIPTION:
Commencing at the East 1/4 Corner of Section 32, Township 2 South, Range 6 East, City of Ann Arbor, Washtenaw County, State of Michigan; thence S01°22'54"E 749.98 feet along the east line of said Section and the centerline of South State Street; thence N71°33'01"W 35.18 feet for a Place of Beginning; thence S01°22'54" 620.84 feet along the westerly right of way of said South State Street; thence N23°47'43"W 776.95 feet along the easterly right of way of the Ann Arbor Railroad; thence N66°15'33"E 13.11 feet; thence S71°33'01"E 301.85 feet along the southerly right of way of Stadium Boulevard to the Place of Beginning. Being a part of the Southeast 1/4 of said Section 32 and containing 2.14 acres of land, more or less.

Arbor Land Consultants, Inc.
Professional Land Surveyors
2936 Madrona Ct.
Ann Arbor, MI 48103
Tel 1-734-669-2960
Fax 1-734-669-2961

CLIENT: UNIVERSITY OF MICHIGAN
RED LOT PARKING AREA
TOPOGRAPHICAL SURVEY
S. STATE ST. @ STADIUM BLVD.
SECTION 32, T2S, R6E,
CITY OF ANN ARBOR
MICHIGAN

JOB No. 10912/03813/11313
SHEET 8 OF 8
SCALE 1 INCH = 20 FEET
DATE: 11-25-2011
REVISION: 10-03-2013

SECTION CORNER
FOUND IRON PIPE
FOUND IRON ROD
SET IRON PIPE
SET MAG NAIL
FOUND MAG NAIL
CONTROL POINT
MEASURED DIMENSION
RECORDED DIMENSION
SURFACE FLOW

WATER MANHOLE
FIRE HYDRANT
GATE VALVE
BEEHIVE CATCH BASIN
CURB CATCH BASIN
STORM MANHOLE
CULVERT / END SECTION
SANITARY MANHOLE
LIGHT POLE
UTILITY POLE
TELEPHONE RISER
GAS MAIN RISER

ELECTRIC LINE
GAS MAIN
WATER MAIN
STORM LINE
SANITARY LINE
CABLE TV LINE
PHONE LINE
CHAIN LINK FENCE
WOOD FENCE
BARBED WIRE FENCE

THE UNDERGROUND UTILITIES SHOWN HAVE BEEN LOCATED FROM FIELD SURVEY INFORMATION AND EXISTING DRAWINGS. THE SURVEYOR MAKES NO GUARANTEES THAT THE UNDERGROUND UTILITIES SHOWN COMPRISE ALL SUCH UTILITIES IN THE AREA, EITHER IN SERVICE OR ABANDONED. THE SURVEYOR FURTHER DOES NOT WARRANT THAT THE UNDERGROUND UTILITIES SHOWN ARE IN THE EXACT LOCATION INDICATED ALTHOUGH HE DOES CERTIFY THAT THEY ARE LOCATED AS ACCURATELY AS POSSIBLE FROM INFORMATION AVAILABLE. THE SURVEYOR HAS NOT PHYSICALLY LOCATED THE UNDERGROUND UTILITIES OTHER THAN THE STRUCTURE INVENTORY SHOWN HEREON.

811 Know what's below. Call before you dig.

C001C

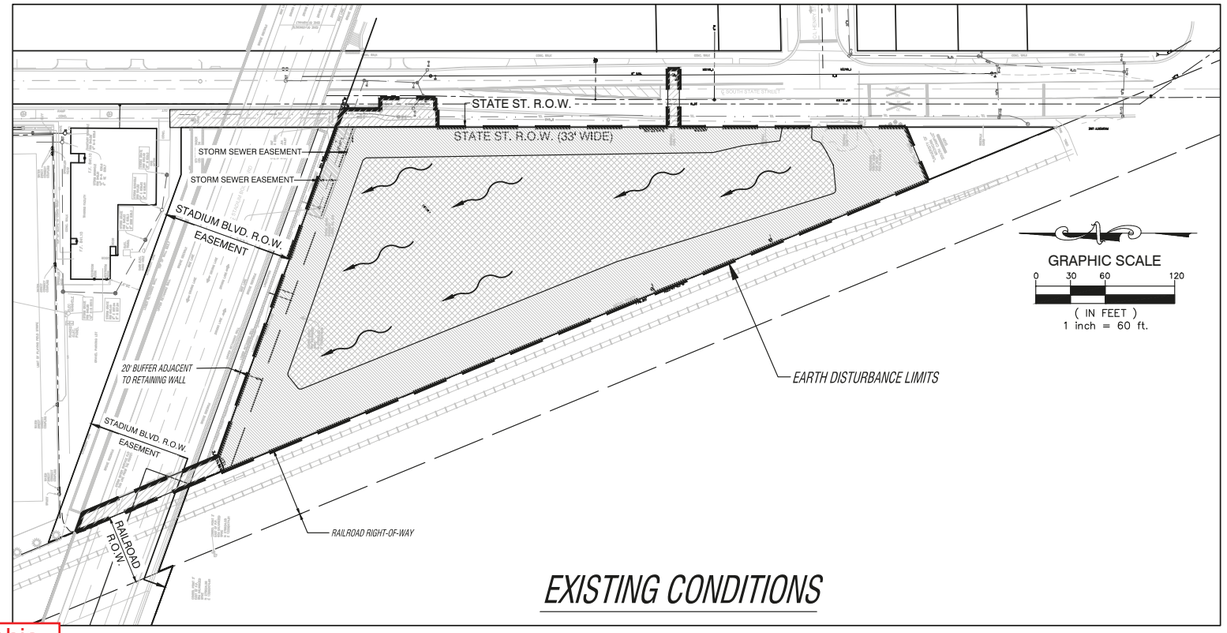

EXISTING CONDITIONS

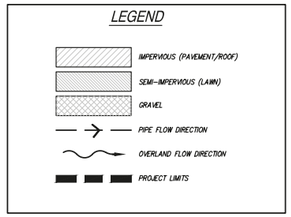

- Storm water sheet.
- Show drainage patterns of proposed and existing conditions with different hatching based on imperviousness. (See Campus Planning level of detail provided on U-M property)
-Provide narrative summarizing storm water as noted below.

Adjust this graphic to provide hatching of surface based on imperviousness and remove site paving details

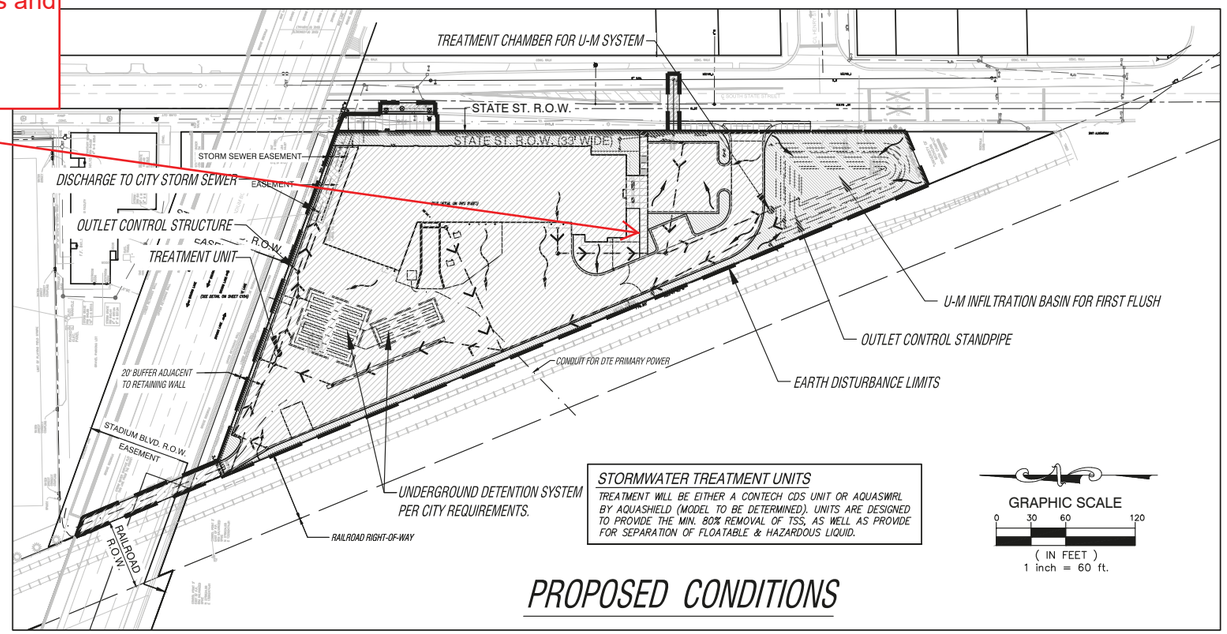

PROPOSED CONDITIONS

STORMWATER TREATMENT UNITS

TREATMENT WILL BE EITHER A CONTECH CDS UNIT OR AQUASWIRL BY AQUASHIELD (MODEL TO BE DETERMINED). UNITS ARE DESIGNED TO PROVIDE THE MIN. 80% REMOVAL OF TSS, AS WELL AS PROVIDE FOR SEPARATION OF FLOATABLE & HAZARDOUS LIQUID.

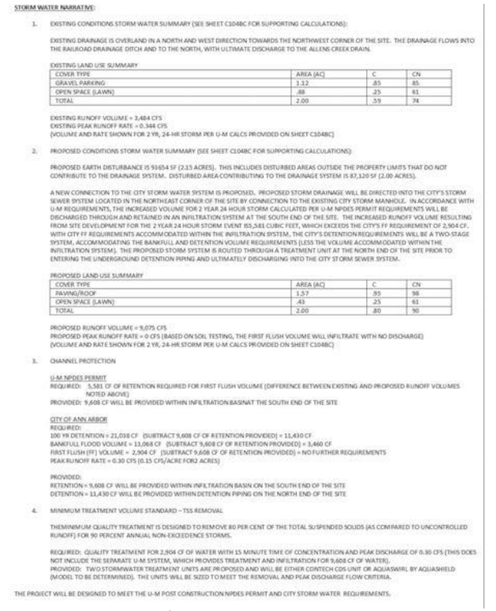

STORM WATER NARRATIVE:

1. EXISTING CONDITIONS STORM WATER SUMMARY (SEE SHEET C104BC FOR SUPPORTING CALCULATIONS):

EXISTING DRAINAGE IS OVERLAND IN A NORTH AND WEST DIRECTION TOWARDS THE NORTHWEST CORNER OF THE SITE. THE DRAINAGE FLOWS INTO THE RAILROAD DRAINAGE DITCH AND TO THE NORTH, WITH ULTIMATE DISCHARGE TO THE ALLENS CREEK DRAIN.

EXISTING LAND USE SUMMARY

COVER TYPE	AREA (AC)	C	CN
GRAVEL PARKING	1.12	.85	85
OPEN SPACE (LAWN)	.88	.25	61
TOTAL	2.00	.59	74

EXISTING RUNOFF VOLUME = 3,484 CFS
EXISTING PEAK RUNOFF RATE = 0.348 CFS
(VOLUME AND RATE SHOWN FOR 2 YR, 24-HR STORM PER U-M CALCS PROVIDED ON SHEET C104BC)

2. PROPOSED CONDITIONS STORM WATER SUMMARY (SEE SHEET C104BC FOR SUPPORTING CALCULATIONS):

PROPOSED EARTH DISTURBANCE IS 93,654 SF (2.15 ACRES). THIS INCLUDES DISTURBED AREAS OUTSIDE THE PROPERTY LIMITS THAT DO NOT CONTRIBUTE TO THE DRAINAGE SYSTEM. DISTURBED AREA CONTRIBUTING TO THE DRAINAGE SYSTEM IS 87,120 SF (2.00 ACRES).

A NEW CONNECTION TO THE CITY STORM WATER SYSTEM IS PROPOSED. PROPOSED STORM DRAINAGE WILL BE DIRECTED INTO THE CITY'S STORM SEWER SYSTEM LOCATED IN THE NORTHEAST CORNER OF THE SITE BY CONNECTION TO THE EXISTING CITY STORM MANHOLE. IN ACCORDANCE WITH U-M REQUIREMENTS, THE INCREASED VOLUME FOR 2 YEAR 24 HOUR STORM CALCULATED PER U-M NPDES PERMIT REQUIREMENTS WILL BE DISCHARGED THROUGH AND RETAINED IN AN INFILTRATION SYSTEM AT THE SOUTH END OF THE SITE. THE INCREASED RUNOFF VOLUME RESULTING FROM SITE DEVELOPMENT FOR THE 2 YEAR 24 HOUR STORM EVENT 85,581 CUBIC FEET, WHICH EXCEEDS THE CITY'S FF REQUIREMENT OF 2,904 CF. WITH CITY FF REQUIREMENTS ACCOMMODATED WITHIN THE INFILTRATION SYSTEM, THE CITY'S DETENTION REQUIREMENTS WILL BE A TWO-STAGE SYSTEM, ACCOMMODATING THE BANKFULL AND DETENTION VOLUME REQUIREMENTS (LESS THE VOLUME ACCOMMODATED WITHIN THE INFILTRATION SYSTEM). THE PROPOSED STORM SYSTEM IS ROUTED THROUGH A TREATMENT UNIT AT THE NORTH END OF THE SITE PRIOR TO ENTERING THE UNDERGROUND DETENTION PIPING AND ULTIMATELY DISCHARGING INTO THE CITY STORM SEWER SYSTEM.

PROPOSED LAND USE SUMMARY

COVER TYPE	AREA (AC)	C	CN
PAVING/ROOF	1.57	.95	98
OPEN SPACE (LAWN)	.43	.25	61
TOTAL	2.00	.80	90

PROPOSED RUNOFF VOLUME = 9,075 CFS
PROPOSED PEAK RUNOFF RATE = 0 CFS (BASED ON SOIL TESTING, THE FIRST FLUSH VOLUME WILL INFILTRATE WITH NO DISCHARGE)
(VOLUME AND RATE SHOWN FOR 2 YR, 24-HR STORM PER U-M CALCS PROVIDED ON SHEET C104BC)

3. CHANNEL PROTECTION

U-M NPDES PERMIT
REQUIRED: 5,581 CF OF RETENTION REQUIRED FOR FIRST FLUSH VOLUME (DIFFERENCE BETWEEN EXISTING AND PROPOSED RUNOFF VOLUMES NOTED ABOVE)
PROVIDED: 9,608 CF WILL BE PROVIDED WITHIN INFILTRATION BASIN AT THE SOUTH END OF THE SITE

CITY OF ANN ARBOR
REQUIRED:
100 YR DETENTION = 21,038 CF (SUBTRACT 9,608 CF OF RETENTION PROVIDED) = 11,430 CF
BANKFULL FLOOD VOLUME = 11,068 CF (SUBTRACT 9,608 CF OF RETENTION PROVIDED) = 3,460 CF
FIRST FLUSH (FF) VOLUME = 2,904 CF (SUBTRACT 9,608 CF OF RETENTION PROVIDED) = NO FURTHER REQUIREMENTS
PEAK RUNOFF RATE = 0.30 CFS (0.15 CFS/ACRE FOR 2 ACRES)

PROVIDED:
RETENTION = 9,608 CF WILL BE PROVIDED WITHIN INFILTRATION BASIN ON THE SOUTH END OF THE SITE
DETENTION = 11,430 CF WILL BE PROVIDED WITHIN DETENTION PIPING ON THE NORTH END OF THE SITE

4. MINIMUM TREATMENT VOLUME STANDARD – TSS REMOVAL

THE MINIMUM QUALITY TREATMENT IS DESIGNED TO REMOVE 80 PER CENT OF THE TOTAL SUSPENDED SOLIDS (AS COMPARED TO UNCONTROLLED RUNOFF) FOR 90 PERCENT ANNUAL NON-EXCEEDENCE STORMS.

REQUIRED: QUALITY TREATMENT FOR 2,904 CF OF WATER WITH 15 MINUTE TIME OF CONCENTRATION AND PEAK DISCHARGE OF 0.30 CFS (THIS DOES NOT INCLUDE THE SEPARATE U-M SYSTEM, WHICH PROVIDES TREATMENT AND INFILTRATION FOR 9,608 CF OF WATER).
PROVIDED: TWO STORMWATER TREATMENT UNITS ARE PROPOSED AND WILL BE EITHER CONTECH CDS UNIT OR AQUASWIRL BY AQUASHIELD (MODEL TO BE DETERMINED). THE UNITS WILL BE SIZED TO MEET THE REMOVAL AND PEAK DISCHARGE FLOW CRITERIA.

THE PROJECT WILL BE DESIGNED TO MEET THE U-M POST CONSTRUCTION NPDES PERMIT AND CITY STORM WATER REQUIREMENTS.

Storm water narrative

REFER TO SHEETS C104AC AND C104BC FOR SYSTEM LAYOUT, DETAILS AND CALCULATIONS

THE UNIVERSITY OF MICHIGAN
Architecture, Engineering and Construction
University Architect's Office
326 E. Hoover Ave.
Mail Stop E
ANN ARBOR, MICHIGAN 48109-1002

NIAGARA MURANO ARCHITECTURE
2215 COLE STREET
BIRMINGHAM, MICHIGAN 48009
TELEPHONE: 248.646.5765
FACSIMILE: 248.646.5813

Architect's Project No. - 13144.0

Spalding DeDecker Associates, Inc.
Engineering Consultants
Infrastructure • Land Development • Surveying
905 South Blvd. East
Rochester Hills, MI 48307
Phone: (248) 844-5400
Fax: (248) 844-5404
www.sda-eng.com
(800) 598-1600
SDA Project No. - NP13033

issue:	date:
City Site Plan Review	April 28, 2014
Prelim. City Site Plan Review	April 25, 2014
Prelim. City Site Plan Review	March 19, 2014
Owner Review - City Submitted	February 19, 2014
DD Review	December 20, 2013
SD Review	November 27, 2013
Owner Review #2	November 7, 2013
Owner Review	October 24, 2013

University of Michigan

submitted to: HFES	NO	BFS:	NO
AEC constr mgmt no.		P00008399	
building no.		-	
designed		T. Sovel	
drawn		J. Ensley	
coordination checked		T. Sovel	
checked	T. Sovel	approved	T. Sovel
um design manager			
location		UM Athletics Ops Center	
keywords			

project:
UM Athletics Department Operations Center

sheet title:
Storm Water Management Plan Summary Sheet

project number: UM AEC : P00008399
sheet number: C104C

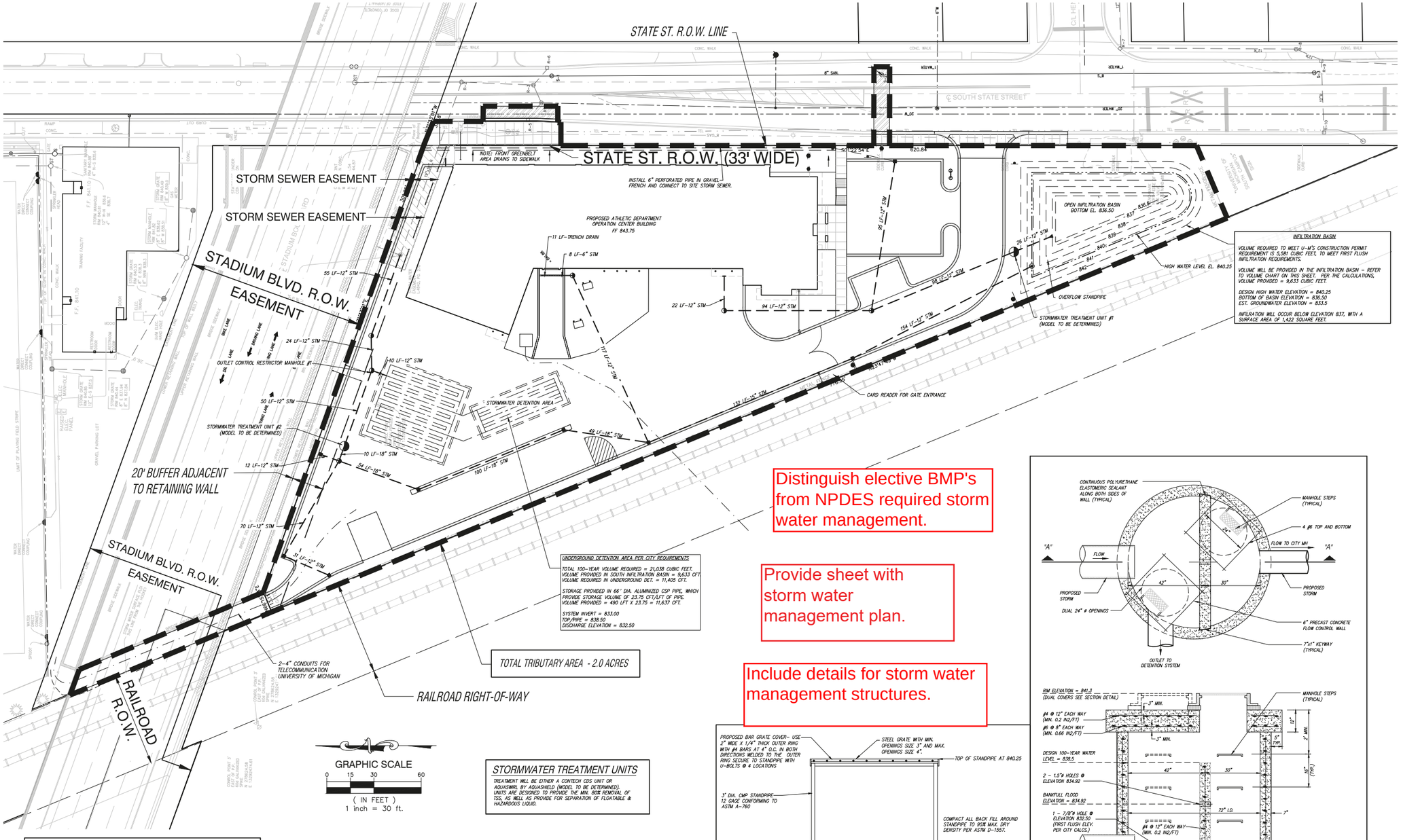

GRAPHIC SCALE
0 15 30 60
(IN FEET)
1 inch = 30 ft.

STORMWATER TREATMENT UNITS

TREATMENT WILL BE EITHER A CONTECH CDS UNIT OR AQUASWIRL BY AQUASHIELD (MODEL TO BE DETERMINED). UNITS ARE DESIGNED TO PROVIDE THE MIN. 80% REMOVAL OF TSS, AS WELL AS PROVIDE FOR SEPARATION OF FLOATABLE & HAZARDOUS LIQUID.

Distinguish elective BMP's from NPDES required storm water management.

Provide sheet with storm water management plan.

Include details for storm water management structures.

LEGEND

- PROPOSED WATERMAIN
- PROPOSED SANITARY
- PROPOSED STORM SEWER
- PROPOSED GAS MAIN
- PROPOSED ELECTRIC
- PROPOSED HYDRANT
- PROPOSED GATE VALVE & WELL (GVW)
- PROPOSED TAPPING SLEEVE, VALVE & WELL (TSVW)
- STANDARD BITUMINOUS PAVEMENT
- HEAVY-DUTY BITUMINOUS PAVEMENT
- DEEP-STRENGTH BITUMINOUS PAVEMENT
- CONCRETE PAVEMENT
- CONCRETE SIDEWALK
- MILL PAVEMENT
- PROPOSED SAN MANHOLE (SAN)
- PROPOSED STORM MANHOLE (MH)
- PROPOSED CATCH BASIN (CB)
- PROPOSED INLET (INL)
- PROPOSED END SECTION (ES)
- PROPOSED FIELD CATCH BASIN (FCB) W/BEEHIVE COVER OR STANDPIPE (SP) W/ BAR GRATE COVER
- 2 — UTILITY CROSSING (SEE DATA TABLE)
- STORM SEWER STRUCTURE: CB 2 — STRUCT. TYPE, STRUCT. NO.
- SANITARY SEWER STRUCTURE: 20
- WATERMAIN STRUCTURE: 10 XXX — STRUCT. NO., STRUCT. TYPE

INFILTERATION BASIN VOLUME

Contour (FT)	Area (SFT)	Volume (CFT)	Total Storage Volume (CFT)	
840.25	4590.85	1111.44	9,632.79	
840.00	4300.64	3758.92	8,521.35	
839.00	3217.20	2737.39	4,762.43	
838.00	2257.57	1839.67	2,025.05	
837.00	1421.76	617.94	185.38	(30% void)
836.50	1050.00			
(NOTE: VOLUME BETWEEN 836.50 AND 837.00 WILL BE FILLED WITH STONE)				
Volume Provided =		9,632.79	cft	
Design water depth =		3.75	ft	

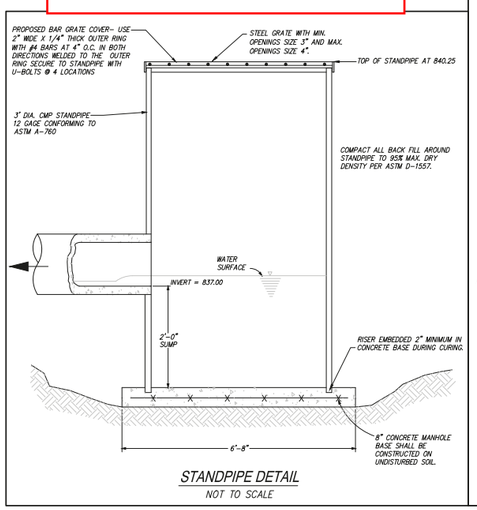

STANDPIPE DETAIL
NOT TO SCALE

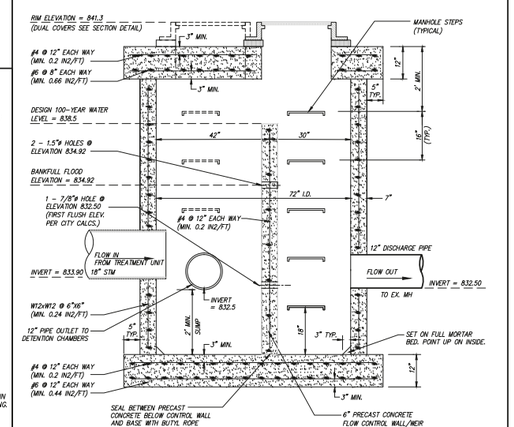

SECTION A-A

NOTE: THE PRECAST REINFORCED OUTLET CONTROL STRUCTURE SHALL BE MANUFACTURED TO ASTM C-478 SPECIFICATIONS.

OUTLET CONTROL STRUCTURE #1 DETAIL
N.T.S.

THE UNIVERSITY OF MICHIGAN
Architecture, Engineering and Construction
University Architect's Office
326 E. Hoover Ave.
Mail Stop E
ANN ARBOR, MICHIGAN 48109-1002

NIAGARA MURANO ARCHITECTURE
2215 COLE STREET
BIRMINGHAM, MICHIGAN 48009
TELEPHONE: 248.646.5765
FACSIMILE: 248.646.5813

Architect's Project No. - 13144.0

Spalding DeDecker Associates, Inc.
Engineering Consultants
Infrastructure • Land Development • Surveying
905 South Blvd. East
Rochester Hills, MI 48307
Phone: (248) 844-5400
Fax: (248) 844-5404
www.sda-eng.com
(800) 598-1600
SDA Project No. - NP13033

issue:	date:
City Site Plan Review	April 28, 2014
Prelim. City Site Plan Review	April 25, 2014
Prelim. City Site Plan Review	March 19, 2014
Owner Review - City Submitted	February 19, 2014
DD Review	December 20, 2013
SD Review	November 27, 2013
Owner Review #2	November 7, 2013
Owner Review	October 24, 2013

University of Michigan

submitted to: HFES	NO	BFS:	NO
AEC constr mgmt no.	P00008399		
building no.	-		
designed	T. Sovel		
drawn	J. Ensley		
coordination checked	T. Sovel		
checked	T. Sovel	approved	T. Sovel
um design manager			
location	UM Athletics Ops Center		
keywords			

project:
UM Athletics Department Operations Center

sheet title:
Storm Water Management Plan

project number: UM AEC : P00008399

sheet number: C104AC

Detention Basin Design

(Washtenaw County Water Resources Commissioner)

Total Area Tributary (A_T) = 2.00

Area Label	A	C	A*C
Pavement	1.11	0.95	1.05
Lawn	0.43	0.25	0.11
Flat Roof	0.46	0.95	0.44
Sum	2.00	2.15	1.60
Overall weighted C factor			0.80

Enter Standard Allowable Discharge (q, cfs/acre) **0.15**

Overall runoff coefficient (C) **0.80**

Overall site acreage contributing to the basin (A) **2.00** **Ac.**

*Maximum allowable outflow, Qmax (q * A)* **0.30** **CFS**

100-Year Flood Volume Required

Q_A = [(allowable outflow, Q_A) / (acreage)(runoff coefficient)]

Q_A = 0.19 CFS/(acre*impenviousness)

Storage time calculation

$T = -25 + \text{sqrt}(10,312.5 / Q_A)$ (100 year storm)

T = 208.0 min.

Maximum volume of storage per acre impenviousness:

$V_A = (16,500 (T) / (T + 25)) - 40(Q_A)(T)$ (100 year storm)

V_A = 13148.8 CF/(acre*impenviousness)

Total volume of storage required for the entire site:

$V_T = (V_A)$(site acreage)(runoff coefficient)

V_T = 21,038 cf

Bankfull Flood Volume

The bankfull storm is defined as the 24 hour, 1.5-year storm event:

V_{BF} = (2.25"x(1/12")(43,560sf/1 ac).AC

V_{BF} = 13,068 cf

First Flush Volume

The first flush storm is defined as the first 0.5" of rain over the entire watershed.

V_{FF} = (0.5"x(1/12")(43,560sf/1 ac).AC

V_{FF} = 2,904 cf

Storage Provided for 100-Year Storm

To meet the UM requirements, **9,633** cubic feet of storage is provided in the infiltration system for the first flush storm, computed for the 2-year, 24 hour storm event. Therefore, total storage required in the City detention system= 21038.9633= 11,405 cubic feet

Storage is provided in 66" diameter aluminized CSP, which provide 23.75 CFT per LFT of pipe

Therefore, 11405 / 23.75 = 480 LFT of 66" diameter pipe.

Refer to calculations below for storage elevations of first flush and bank full volumes

Storage Elevations

First Flush:

Per calculations above, 2,904 cubic feet is required for first flush volume

Per U-M first flush requirements, 5,581 cubic feet of storage is required, and we are providing 9633 cubic feet.

Therefore, first flush volume requirements are met in the infiltration system.

Bankfull:

Bankfull volume can be reduced by first flush volume in UM system = 13068 - 9633 = 3,435 CFT

Bank full flood volume= 3,435 X_{BF} = 834.92

The volume provided at 23' above invert is 7.3 CFT/LFT (approx 834.9)

CFT/LFT of pipe. Therefore, for a length of 480 LFT

The total volume provided is 3,506 CFT

Invert of the system = 833.00

Base Flood Elevation = 834.92

100 year:

The volume for the 100-year storm is provided at the top of the system X_{100} = 838.50 (approx 838.5)

Outlet Control Structure

First flush of runoff:

City of AA standards require that the first flush volume be able to infiltrate. From U-M calculations above, we are infiltrating a volume of 9633 cft, far in excess of the City requirement. This volume is being infiltrated in the retention/infiltration system at the south end of the site.

According to the infiltration testing, an infiltration rate of 1.4 inches per hour is appropriate at the west and south areas of the site in the vicinity of borings B1, B2, and B4. We can use Darcy's Law to estimate the infiltration time for this volume of water.

Darcy's Law, V = AkT

where: V = Volume of water, CFT

A = Area of infiltration, SFT = 1,422 square feet ** see note below

k = infiltration rate, in. per hr = 1.4 in/hour = 0.12 ft/hour

T = time, hours

** - footprint of infiltration area at bottom of basin = 1,400 SFT

Solving for Time, Darcy's Law becomes:

T = V/(A*k)

Therefore, for the volume of 2,904 cubic feet calculated above, the time will be:

T = 2904 / (1422)(0.12)

T = 17.0 hours

Ideal infiltration is anything less than 24 hours.

Bankfull flood:

The bankfull flood must be detained 36-48 hours; discharge will be through holes in the restrictor manhole, in the weir wall, at the first flush elevation. Since first flush is handled in the U-M retention system, set first flush elevation at the outlet elevation of the system.

Xf = 832.50

h_{avg} = 2/3 (elev $_{bf}$ - elev $_{ff}$) = 2/3 (834.92-832.5)

h_{avg} = 1.61 ft

To target a detention time of 36 hours, compute the flow rate, Q, to discharge the bank full flood volume:

$T = V_{BF} / Q$, solve for Q = Vbf/t, where V= 3,435 and t = 36 hrs.

(note - volume references city requirement less UM volume)

= 3,435 / 36 = 95.42 cf/hr or 0.027 cfs

Now compute orifice sizing to achieve 0.027 CFS

$Q = 0.62 * A_{ff} * \text{sqrt}(2*g*h_{avg})$, solve for Aff

Aff = 0.0042 SFT = 0.60 square inches

Solving for radius gives 0.436 inches, or 0.88 inch diameter hole

to be set at the first flush elev., or outlet elev. of the system = 832.50

Since the 0.88 in dia. hole is not a standard dimension, use 0.875 (7/8) inch

This gives an actual area of 0.0042 square feet so the calculations below will use this area.

100-year flood:

Q_A = 0.30 cfs (using 0.15 cfs/acre)

Q_A is a peak or maximum flow. Calculate the maximum flow passing through the bankfull orifice, using the total head, and subtract from Q_A to determine the additional orifice size to release the 100-year storm volume:

$Q_{BF} = 0.62 * A_{BF} * \text{sqrt}(2*g*h_{BF})$ h_{BF} = 6.0

A_{BF} = 0.0042

Q_{BF} = 0.05 cfs

$Q_{100} = Q_A - Q_{BF}$ (this is the additional flow required to achieve the 0.3 cfs max outflow)

Q_{100} = 0.25 cfs

Compute orifice area at the bank full elevation to attain the addl 0.25 cfs.

$A_{100} = Q_{100} / (0.62 * \text{sqrt}(2*g*h_{100}))$ where h_{100}= 3.58 feet from 100-year water level to bank full level

A_{100} = 0.026 sf

A 1.5" diameter orifice has an area of 0.0123 sf

= A_{100} / area per orifice

= 2.15

Therefore, use 2 - 1.5" diameter holes @ elev. 834.92

Calculation of Detention Volume Discharge Time

First, calculate discharge time from 100-year HWL (838.5) to bank full elevation (834.92) through the holes at the bankfull elevation.

h_{avg} = 2/3 (elev $_{100}$ - elev $_{bf}$) elev $_{100}$ = 838.50

h_{avg} = 2.39 ft elev $_{bf}$ = 834.92

$Q = 0.62 * A * \text{sqrt}(2*g*h_{avg})$

A = 0.0264

Q_{100} = 0.20 cfs (discharge rate through holes at bank full elev)

Next, calculate discharge through the holes at the discharge elevation (832.5) between the 100-year level (838.5) and bank full level (834.92)

Average water level = 837.31 Average head = 837.31 - 832.5= 4.81

$Q = 0.62 * A * \text{sqrt}(2*g*h_{avg})$

A = 0.0042

Q_{100} = 0.05 cfs (discharge rate through discharge hole at 832.5)

Total discharge rate between elevation 838.5 and 834.92 = 0.25 CFS

In the detention system, the volume stored between 838.5 and 834.92 over 480 LFT is 8,186 CFT

The time to drain 8186 CFT at a rate of 0.25 CFS = 32,877 SEC = 9.1 HRS

Next, calculate discharge time from bank full elev (834.92) to discharge level (832.5) through discharge hole

h_{avg} = 2/3 (elev $_{bf}$ - elev $_{discharge}$) elev $_{bf}$ = 834.92

h_{avg} = 1.61 ft elev $_{discharge}$ = 832.50

$Q_{100} = 0.62 * A_{discharge} * \text{sqrt}(2*g*h_{avg})$

$A_{discharge}$ = 0.0042

Q_{100} = 0.03 cfs

In the detention system, the volume stored between 834.92 and 832.5 over 480 LFT is 3,219 CFT

The time to drain 3219 CFT at a rate of 0.03 CFS = 121,276 SEC = 33.7 HRS

Total time to drain the detention system = 9.13 + 33.69 = 42.8 Hours

UNIVERSITY OF MICHIGAN
OSEH REQUIREMENTS FOR STORMWATER MANAGEMENT

1.1 Minimum Treatment Volume Standard

The minimum treatment volume standard shall be based on the 90 percent annual non-exceedance storm, which is dictated in the MDEQ 2006 memo.

The 90% Annual Non-Exceedence Storm for this area, P = 0.9 inches

Total Disturbed Area, A = 2.00 acres

Use the Small Storm Hydrology Method to compute a volumetric runoff coefficient (Rv) based on the specific characteristics of the pervious and impervious surfaces of the drainage catchment.

Area Type	A (acre)	Rv	A*Rv
Silty Soils (HSG-B)	0.46	0.11	0.05
Impervious Paving	1.11	0.97	1.08
Flat Roof	0.43	0.84	0.36
Sum	2.00		1.49
Weighted Volumetric Runoff Coefficient, Rv:			**0.75**

Water Quality Volume, WQV = P x Rv x A

WQV = 0.9 inches x 0.75 x 2 acres x 1ft/12in x 43,560sf/acre

WQV = 4901 cft (Minimum Treatment Volume)

Estimating Peak Discharge for the Water Quality Storm

Solve for the curve number, CN.

$CN = 1000/[10 + \{P + 10Q - 10(Q^2 + 1.25QP)^{1/2}\}]$

Where Q = P x Rv = 0.9 x 0.75 = 0.68 inches

CN = 1000/[10 + 5(0.9) + 10(0.68) - 10((0.68)2 + 1.25(0.68)(0.9))1/2]

CN = 98

Solve for the Peak Discharge, Qp

Given the CN calculated above, Ia = 0.041 in (TR-55, Table 4-1)

The drainage area is equal to the disturbed area = 0.00313 sq. mi.

Appropriate rainfall distribution type: Type II

Ia/P = 0.05

Given the Ia/P and Tc of 15 minutes, Unit Peak Discharge, qu = 750 csm/in (TR-55, Exhibit 4-II)

Qp = qu x A x Q

Qp = 750 x 0.00313 x 0.68 = 1.6 cfs (Peak Discharge for Water Quality Storm)

1.2 Minimum Treatment Volume Standard - TSS Removal

The U-M requirement is that a minimum of 80 percent removal of total suspended solids (TSS), as compared with uncontrolled run-off, is required for post-development. This will be accomplished through the use of two stormwater treatment units, one at the south infiltration area, and one at the north side of the site prior to discharge into the City storm system. The units will be either a CDS unit by Stormtech, or an AquaSwirl unit by AquaShield (model to be determined). Both units provide the required 80% TSS removal, as well as providing separation of floatables and hazardous liquids (oil, gas, etc.).

2.0 - 2.2 Channel Protection Criteria, Rainfall Data, and Methods for estimating pre-and post development runoff

The channel protection criteria must maintain post-development site runoff volume and peak flow rate at or below existing levels for all storms up to the 2-year, 24-hour event. "Existing levels" means the runoff volume and peak flow rate for the last land use prior to the planned new development or redevelopment.

The rainfall data for calculating runoff volume and peak flow rate shall be the *Rainfall Frequency Atlas of the Midwest*, 1992 (NOAA - Huff & Angel).

The methods used for estimating pre- and post-development runoff shall follow curve number evaluations as described in MDEQ's *Computing Flood Discharges from Small Ungaged Watersheds*, June 2008.

	Area (sft)	Area (acres)
Disturbed Area of Site		2
Estimated Watershed Area (i.e. area of site)	87120	2
Existing Impervious Area in Watershed	0	0
Existing Gravel Area	49022	1.13
Proposed Impervious Area in Watershed	67082	1.54
Change in Impervious Area in Watershed	67082	1.54

Existing Conditions:

Hydrologic Soil Group	Percent of Total Drainage Area	Land Use	Percent of Soil Group	RCN	Partial RCN
B	100	Lawn Areas	44	61	26.84
		Gravel Areas	56	85	47.6
				Sum	74

Proposed Conditions:

Hydrologic Soil Group	Percent of Total Drainage Area	Land Use	Percent of Soil Group	RCN	Partial RCN
B	100	Lawn Area	23	61	14.03
		Impervious Area	77	98	75.46
				Sum	89

Calculate Surface Runoff (SRO):

SRO = (P-0.2S)^2 / (P+0.8S)^2

where P = 2 Year, 24 hour rainfall (inches) = 2.26 inches for Ann Arbor

and S = Potential Maximum Retention after Runoff Begins, inches

S = (1000/RCN) - 10

Therefore, computing S for both existing and proposed conditions:

Sx = 3.51 inches

Sp = 1.24 inches

Now calculate SRO for both existing and proposed conditions:

SROx = 0.48 inches

SROp = 1.25 inches

Runoff Increase = 0.77 inches

The drainage area of the site is 87,120 square feet. The required retention volume is based on the increase in runoff from existing to proposed condition. For these sites, that will be 0.77 inches. Therefore, the retention volume is:

Volume = A x (SROp-SROx) / 12" / foot

Volume = 5,581 cubic feet

Storage volume to meet U-M requirements is provided in the open retention/infiltration basin at the south end of the site. Volume is provided between the bottom elevation of 836.50 and the storage elevation of 840.25. Total volume provided is **9,633** cubic feet (refer to volume chart on the plans)

FLOW CALCULATION FOR EXISTING DISCHARGE

TR-55 procedures will be utilized to estimate the discharge from the existing site. Utilizing the flow chart in Figure 1-1, it can be determined that the Graphical Peak Discharge Method should be used.

The first step is to compute the watershed runoff, "Q", per Chapter 2 in TR-55.

The SCS runoff curve number method is used to compute the runoff as follows:

Q = (P-0.2S)^2 / (P+0.8S) where Q = runoff (in), P = rainfall (in), and S= potential max retention after runoff begins. S is computed as:

S = (1000/CN)-10 = 3.51 inches

P for the 2 year, 24 hour storm is 2.26 inches for Ann Arbor.

Therefore, Q is equal to: 0.479 inches

The second step is to compute the time of concentration, Tc for the watershed. This is done utilizing the methods indicated in Chapter 3. The existing drainage on this site is from south to north, via sheet flow. Per TR-55, time of concentration for sheet flow should only be computed over a maximum length of 300', after which the surface runoff should be treated as shallow, concentrated flow. The computation for Tc using the two zones follows:

Tc for sheet flow = 0.007(nL)^0.8 / ((P2)^0.5 * s^0.4), where n = Manning's coefficient of roughness, L = length of travel, P = 2 year, 24 hour rainfall (inches), and s = slope of the land.

Tc for shallow, concentrated flow = L/(3600*V), where L = length of travel, and V is determined from Figure 3-1 in TR-55 based on the slope of the land and type of surface.

Time of Concentration, Tc, for Existing Conditions

Type of Flow	Length (ft)	Change in Elevation (ft)	Slope (ft/ft)	Manning "n"	Velocity (fps)	Incremental Tc (hrs)
Sheet Flow	300	1.0	0.0033	0.24	N/A	1.40
Shallow Flow	360	1.8	0.0050	n/a	1.18	0.08
					Total Tc	1.49

The third step is to compute the peak discharge using the Graphical Peak Discharge Method, described in Chapter 4 of TR-55.

The peak discharge, Qp = Qu x Am x Q x Fp, where:

Qp = peak discharge, CFS

Qu = unit peak discharge, csm/in

Am = drainage area, mi^2 = 0.003125 square miles

Q = runoff, in, as computed above

Fp = pond adjustment factor (N/A for this project)

Qu, unit peak discharge, is based on the values of Ia, P, and the CN.

Using Table 4-1 in TR-55, the initial abstraction, Ia, for a CN of 74 is 0.703 inches.

The 24-hour rainfall for the 2-year event is 2.26 inches

Therefore, Ia/P is computed as: 0.311

Now utilizing the value of Ia/P and the Tc computed above, we utilize the graph in Exhibit 4-II to determine Qu for the Type II rainfall distribution. The graph indicates a value of 230 csm/in

Therefore, Qp for existing conditions = 0.344 CFS

FLOW CALCULATION FOR PROPOSED DISCHARGE

In addition to limiting the volume of runoff to the pre-development 2 year, 24-hour storm, the discharge rate/velocity for post-development must also not exceed the pre-development numbers.

Based on the Flow Calculation for Existing Discharge above, the existing discharge from the site is 0.344 CFS.

Per City of Ann Arbor requirements, the discharge from the system will be restricted to 0.15 CFS/acre up to the 100-year storm. The total tributary area is 2 acres, and therefore our max discharge under design conditions is 0.30 CFS, which is less than the 0.344 CFS existing discharge.

It should be noted that the discharge rate from the system for the 2-year, 24-hour storm will be completely eliminated, since the discharge for the 2 year, 24-hour storm will now infiltrate.

STORMWATER SYSTEM DISCHARGE PER U-M REQUIREMENTS

Discharge to meet the UM requirement is proposed via infiltration through the sand/gravel soils on the site. The infiltration zone is proposed at the south end of the site, where infiltration based on testing is at it's highest level of 9.4 inches per hour. SME recommends an infiltration rate of 1.4 inches per hour at the west and south parts of the site, which takes into account a significant factor of safety for clogging of the soils.

We propose an open infiltration basin at the south end of the site. The design provides a surface area at the 837 contour of 1,422 square feet for the infiltration zone.

Darcy's Law will be used to calculate the time need to fully infiltrate the channel protection volume.

Darcy's Law, V = AkT

where: V = Volume of water, CFT = 5,581 CFT

A = Area of infiltration, SFT = 1,422 square feet

k = infiltration rate, inches per hour = 1.4 in/hour = 0.12 ft/hour

T = time, hours

Solving for Time, Darcy's Law becomes:

T = V/(A*k)

Therefore, for the volume of 5,581 cubic feet calculated above, the time will be:

T = 5581 / (1422)(0.12)

T = 32.7 hours

Infiltration must infiltrate between 24 and 48 hours, so this is acceptable.

Provide calculation sheet.

THE UNIVERSITY OF MICHIGAN

Architecture, Engineering and Construction
University Architect's Office
326 E. Hoover Ave.
Mail Stop E
ANN ARBOR, MICHIGAN 48109-1002

NIAGARA MURANO ARCHITECTURE
2215 COLE STREET
BIRMINGHAM, MICHIGAN 48009
TELEPHONE: 248.646.5765
FACSIMILE: 248.646.5813

Architect's Project No. - 13144.0

Spalding DeDecker Associates, Inc.

Engineering Consultants
Infrastructure • Land Development • Surveying

905 South Blvd. East
Rochester Hills, MI 48307
Phone: (248) 844-5400
Fax: (248) 844-5404

www.sda-eng.com
(800) 598-1600

SDA Project No. - NP13033

issue:	date:
City Site Plan Review	April 28, 2014
Prelim. City Site Plan Review	April 25, 2014
Prelim. City Site Plan Review	March 19, 2014
Owner Review - City Submitted	February 19, 2014
DD Review	December 20, 2013
SD Review	November 27, 2013
Owner Review #2	November 7, 2013
Owner Review	October 24, 2013

University of Michigan

submitted to: HFES	NO	BFS:	NO
AEC constr mgmt no.			P00008399
building no.			-
designed			T. Sovel
drawn			J. Ensley
coordination checked			T. Sovel
checked	T. Sovel	approved	T. Sovel
um design manager			
location			UM Athletics Ops Center
keywords			

project:
UM Athletics Department Operations Center

sheet title:
Storm Water Management Details and Calculations

project number: UM AEC : P00008399

sheet number: C104BC

ARCHITECTURE, ENGINEERING AND CONSTRUCTION
UNIVERSITY OF MICHIGAN

Storm Water Management Procedures For Use By Project Team

Prepared by AEC and EHS (updated 1/23/2017)

Project storm water goals are set at the Pre-Design Phase, during programming, to ensure that storm water management planning is incorporated early into the planning process for all projects. The Design Manager (DM) is responsible for developing the storm water management strategy for projects under his/her assign. A Storm Water Management Team ("Storm Water Team") consisting of U-M representatives from Environment, Health and Safety (EHS) and Architecture, Engineering and Construction (AEC) is available to assist Project Teams in determining what is required and in identifying strategies for storm water management before the project is too advanced. Meetings between the Project Team and Storm Water Team will be held at key decision points, as outlined below, for the purpose of reviewing and refining the overall storm water management options into a single approach for implementation. At a minimum, projects are required to meet Michigan Department of Environmental Quality (MDEQ) Post-Construction Storm Water Management Requirements, regulated under the university's National Pollutant Discharge Elimination System (NPDES) permit, *on-site* when feasible. When this is not possible, alternative strategies need to be developed and agreed upon before moving into Schematic Design.

The process is described in detail below and an abridged version is available in the storm water management graphic.

The DM/Project Team is responsible for knowing and adhering to all environmental considerations as outlined in the EHS website-Environmental Considerations for Construction Projects and in the AEC Design Guidelines. Some, but not all, of the related guidelines, requirements and tools are highlighted below:

- EHS Storm Water Management Program Plan (as prepared for NPDES certificate)
- EHS Storm Water Management Post-Construction Requirements
- EHS Soil Erosion and Sedimentation Control Procedure
- EHS Best Management Practices for U-M
- Southeast Michigan Council of Governments Low Impact Development Manual
- Michigan Nonpoint Source Best Management Practices Manual
- AEC soil boring and infiltration testing minimum requirements
- Examples of plan sheets and narrative template for plan sheet with new connection to City system

Procedure

Pre-Design (Program/Study Phase)

1. Kickoff meeting. The purpose of the meeting is to discuss U-M storm water management plans and requirements, review regulatory requirements, identify challenges and benefits of infiltration and green infrastructure, the initial minimum soil boring/test pit requirements (required to determine on-

site soil types, infiltration capabilities and limitations, and identify water table elevation limitations), best management practices (BMPs) proposed for use on the site, maintenance concerns, and the storm water outlet. This meeting may allow for a faster, more cost-effective site design by identifying the storm water management issues and determining regulatory environments early in the process.

2. Soils evaluation. If not already done, preferably as part of the initial Program/Planning Study Phase, initiate geotechnical soils investigation to determine the project site's suitability for storm water retention (infiltration). Soils evaluations are to be conducted by a qualified geo-technical firm with infiltration testing experience. At a minimum, the evaluation shall include soil borings and soil infiltration testing at potential design depths. Geotechnical investigation should also include water table investigation and some additional deep borings (as applicable) to determine infiltration layer thickness and to see if there are opportunities for deeper infiltration. If soils with favorable infiltration rates are found, the geotechnical firm shall make a determination as to whether they exist as isolated areas and are suitable for infiltration of storm water over time, or if the infiltrating soils are isolated areas with little benefit for storm water management.

3. The DM/Project Team will create and document the evolution of storm water management strategies (Basis of Design) throughout the course of the project and will review the most current design with the Storm Water Team **at each phase of the project.** The following information should be included, but not limited to, the following for this phase:
    a. Project name and number
    b. General site description/site plan
    c. A map, at the U.S.G.S. scale, showing the drainage boundary of the proposed development and its relationship with existing drainage patterns, including any drainage originating outside the development that flows onto or across the development. Such offsite drainage shall be quantified.
    d. Existing natural features (topography, land cover, water bodies, streams, wetland, etc.)
    e. On-site drainage infrastructure
    f. Off-site drainage patterns of adjacent properties
    g. Water table elevation (minimum 3' buffer from seasonably high water table is typically required for infiltration)
    h. Presence of known contaminated soils and/or groundwater (provide explanation)
    i. General soil characteristics information – soil survey, soil borings, preliminary infiltration test data performed at potential locations/depths proposed for infiltration
    j. Indicate proposed storm water management concepts and where the drainage will outlet, including if there will be the need for a new outlet to a surface receiving water, a new connection to City or County storm water systems, or if water from the site will enter the City storm system through a U-M storm line
    k. Potential locations for infiltration BMPs and any other BMPs
    l. Create a preliminary BMP list of potential options with cost/benefits identified. Recommend to the Storm Water Team viable options to pursue based on site specific information gathered.

4. Meeting minutes taken by the DM or DM's delegate (with action items/decision points).

1. Project Team to update the conceptual Basis of Design to include the following additional information:
    a. Limits of total earth disturbance required (including consideration of topographical requirements for excavation and off-site utility connections)
    b. The amount of runoff (CF) on the site for 2-yr/24-hr storm event, 10-yr/12-hr storm event, 25-yr/24-hr storm event and 100-yr/24-hr storm event
    c. A brief drainage narrative describing the proposed storm water management system
    d. Infiltration/retention options. If soil testing (based on boring logs and on-site infiltration) determines that infiltration is feasible, the Project Team shall evaluate and review with the Storm Water Team viable storm water management options and develop a conceptual plan that maximizes the use of the site by incorporating a combination of BMPs (or other site specific retention/green infrastructure practices approved by the Storm Water Team). Quantify/calculate the required volume of storm water infiltration/retention to meet post-construction permit requirements (minimum requirement). Quantify/calculate the volume of infiltration/retention so that there is no change in runoff for the change in impervious for the 100-year storm event as a targeted goal. When compiling a table of options for evaluation, the Project Team must factor in site specific infiltration rates (with applicable safety factor) and water table, rough cost, volume of water taken off-line, and area/depth needed to achieve the infiltration requirement.
    e. If on-site infiltration is not feasible at the project site, the Project Team will need to evaluate off-site infiltration options within the applicable watershed or other retention/green infrastructure practices to meet post-construction permit requirements. If off-site mitigation is to be utilized, the Project Team is to provide documentation of due diligence performed to determine on-site storm water mitigation is not a viable option. A 1.2x off-set mitigation penalty may be required, depending on how storm water is routed to the off-site infiltration BMP.
    f. Detention in-lieu option. If infiltration is not viable for the project, the Project Team will need to evaluate the use of detention and other green infrastructure practices to reduce possible increases in flow volume and rate. Alternate options must be included within the evaluation table and will require close coordination and approval from the Storm Water Team and will require MDEQ submittals for approval. Note, if detention in lieu is to be utilized, a 1.2x minimum off-set mitigation penalty will be required.
    g. Storm water volume calculations. When refining the BMP options for evaluation, the Project Team must factor in site specific infiltration rates (with applicable safety factor) and water table, rough cost, volume of water taken off-line, and area/depth needed to achieve the infiltration requirement.
        i. Based on conceptual site design, calculate a preliminary number for the required volume of storm water infiltration/retention for no change in run-off volume/rate for a 2-yr/24-hr storm event to meet post-construction permit requirements, (minimum requirement). Calculate a preliminary number for the volume of infiltration/retention for no change in runoff for a 100-yr/24-hr storm event as a targeted goal.
        ii. Calculate preliminary storm water volume and rate per option based on concept level BMP potential option plans. Provide evaluation of various options to accommodate from a 2yr/24-hr storm event through a 100-yr/24-hr storm event, as well as evaluating the maximum viable volume of storm water management and the optimal volume of storm water management based on site specific data. All projects shall evaluate the potential to manage the full 100-yr/24-hr storm event (both

volume and velocity). In addition, also evaluate the delta of the 100-yr/24-hr storm event (both volume and velocity) over existing conditions. Projects should work with the Storm Water Team to maximize or optimize for what is feasible and viable.

iii. Above and Beyond: Opportunities for maximizing storm water onsite infiltration. In some cases, a determination may be made that a given project site is an ideal location to go beyond NPDES permit requirements for the purposes of good engineering practices to manage storm water runoff flooding, system capacity constraints and/or erosive velocities. Note, if site conditions are favorable for infiltration, the Project Team shall include within the storm water evaluation additional BMP options/calculations for both the maximum and the optimal site infiltration volumes.

iv. If development is proposed in an area where flooding problems exist or are anticipated, include a plan for how these issues will be addressed. This is required for all exterior impact projects and not exclusive to those that must meet NPDES permit requirements.

v. In addition to NPDES permit requirements, the project must ensure that there will be no impacts to upstream, downstream, or adjacent properties from changes in floodwaters that could be caused by the proposed project. Projects must ensure that impacts to receiving waters will not cause erosion, and in some cases, projects may be required to include some stream channel restoration/BMP implementation to mitigate potential impacts. This may require that a no-rise analysis be performed for the proposed site design if in a shallow flood zone x, and would be required if within a 100-year floodplain or floodway.

h. Refine the Basis of Design with viable BMP option information and calculations including but not limited to the following:

i. Change in impervious (increase/decrease)

ii. Volume of storm water/runoff on the site and/or available to be redirected into a storm water BMP for 2-yr/24-hr event, 10-yr/12-hr event, 25-yr/24-hr event and 100-yr/24-hr event

iii. Volume of storm water required to be infiltrated/retained to meet NPDES permit for no change in run-off volume/rate for a 2-y/24-hr storm event

iv. Volume of storm water for no change in run-off volume/rate for a 100-yr/24-hr storm event

v. BMP options considered, with treatment type noted (infiltration, retention, detention)

vi. BMP dimensions/area/volume for treatment of 2-yr/24-hr through 100-yr/24-hr storm events. Verify that the proposed topography can accommodate the calculated volumes and identify/include in costs any utility relocations.

vii. Soil types and infiltration rates at location of proposed BMPs

viii. Opinion of probable construction costs to implement each BMP option

ix. Construction cost per volume. Example: cost of infiltrating above ground/volume of storm water infiltrated.

x. Maintenance requirements of BMP, including frequency and costs

xi. Aesthetics

xii. Project tradeoff summary (missed opportunities)

i. Conceptual layout for the BMPs and proposed drainage collection system.

i. Conceptual site plan including soil boring/infiltration locations and BMP locations with storm outlets

ii. Proposed topography for the detention or retention basin(s) in one foot intervals

2. The Project Team shall meet with the Storm Water Team to review the items above to determine the best course of action before moving into Schematic Design – including initiating the City of Ann Arbor Project Review Process or Washtenaw County Water Resource storm water plan submittal.

3. Meeting minutes taken by the DM or DM's delegate (with action items/decision points). A list of BMP's considered should be updated and refined for each design phase until selection of BMP's.

Schematic Design

---

1. Project Team to initiate infiltration testing at each proposed infiltration location at design infiltration depths to verify infiltration rates are acceptable and that the design meets project and regulatory requirements. These tests are in addition to the early infiltration testing that was used to guide the design. Update calculations based on infiltration rates at actual infiltration locations. Multiple infiltration locations required multiple infiltration tests.

2. Project Team to update the Basis of Design to include the following additional information:
    a. Proposed topography for all areas, both off and onsite, to be disturbed by construction. The proposed topography will be provided in one-foot contour intervals. If off-site grading is required, provide evidence of appropriate easements.
    b. Storm Water Management Plan incorporating BMPs and Soil Erosion and Sedimentation Control Procedures
    c. SD layout for the proposed drainage collection system
    d. Calculations used for designing all components of storm water management systems
    e. Updated cost/benefit
    f. The overall storm water management system for the proposed development with structure rim and invert elevations, culvert and storm sewer lengths and sizes as well as all surface storm water conveyance top of bank and centerline elevations at 100' intervals

3. The Project Team shall meet with the Storm Water Team to review refinements to plans and calculations that will be submitted for AEC's plan review process. Follow U-M format for plans, and calcs with storm water narrative and, if applicable, for other regulatory reviews.

4. Meeting minutes are to be taken and distributed by the DM or DM's delegate (with action items/decision points). BMP's considered should be updated and refined for each design phase until the selection of BMP's.

Design Development, Construction Documentation and Post-Construction

---

1. Project Team to update the Basis of Design and graphics to reflect updated information and storm water management options incorporated into the design.

2. Meet with the Storm Water Team as necessary and if there are changes to the storm water management plan.

3. Follow AEC plan review process, post-construction permit requirements, SESC requirements, and incorporate storm water best management practices as feasible and practical.

4. Once the overall Storm Water Management Plan is developed, projects with other agency regulated storm water components shall follow AECs' plan review process for those agencies. (Allow 4 to 8 months for City or County plan approval.) During further development or ongoing review of storm water plans, the Project Team shall continue to update the Storm Water Team on any review comments and/or modifications to the Plan.

5. Final design specifications are to include templates for construction inspection checklists and require contractor/design engineer signatures of compliance.

6. Meeting minutes are to be taken and distributed by the DM or DM's delegate. BMP's considered should be refined and documented for each design phase until selection and design of BMP's for implementation.

Building Name:	Enter Building Name Here	
Project Name:	Enter Project Name Here	
Building/Site Gross Area:	0 GSF	0.0 Acre
Date of Estimate:	xx/xx/20xx	
Anticipated Construction Start:	xx/xx/20xx	**Document Date: 8/17/2017**
Anticipated Construction Finish:	xx/xx/20xx	

CONSTRUCTION SPECIFICATION INSTITUTE BREAKDOWN

YELLOW HIGHLIGHTED AREAS ARE FOR DATA INPUT

CSI 2012	Section Title	QUANTITY	UNIT	AVG PRICE	TOTAL $
00 00 00	PROCUREMENT/CONTRACTING REQUIREMENTS:				
	Fill-in	-	GSF	$ -	$ -
	Fill-in	-	GSF	$ -	$ -
	Fill-in	-	GSF	$ -	$ -
	SUBTOTAL PROCUREMENT/CONTRACTING REQUIREMENTS:				**$ -**
01 00 00	GENERAL REQUIREMENTS:				
01 21 00	Allowances	-	GSF	$ -	$ -
01 31 00	Project Management and Coordination	-	GSF	$ -	$ -
01 51 00	Temporary Utilities	-	GSF	$ -	$ -
01 52 00	Construction Facilities	-	GSF	$ -	$ -
01 53 00	Temporary Construction	-	GSF	$ -	$ -
01 55 00	Vehicular Access and Parking	-	GSF	$ -	$ -
01 56 00	Temporary Barriers and Enclosures	-	GSF	$ -	$ -
01 74 00	Cleaning and Waste Management	-	GSF	$ -	$ -
	SUBTOTAL GENERAL REQUIREMENTS:				**$ -**
02 00 00	EXISTING CONDITIONS:				
02 41 16	Structure Demolition		GSFD	$ -	$ -
02 41 19	Selective Demolition	-	GSF	$ -	$ -
02 61 00	Removal and Disposal of Contaminated Soils		RACRE	$ -	$ -
02 71 00	Groundwater Treatment	-	GACRE	$ -	$ -
02 80 00	Facility Remediation	-	GACRE	$ -	$ -
	SUBTOTAL EXISTING CONDITIONS:				**$ -**
03 00 00	CONCRETE:				
03 30 00	Cast-in-Place Concrete				
03 30 10	Below-Grade		CYBG	$ -	$ -
03 30 20	Above-Grade		HSFAG	$ -	$ -
03 41 00	Precast Structural Concrete		TASPC	$ -	$ -
03 45 00	Precast Architectural Concrete		GAPC	$ -	$ -
03 48 00	Precast Concrete Specialties		GAPC	$ -	$ -
	SUBTOTAL CONCRETE:				**$ -**
04 00 00	MASONRY:				
04 21 13	Brick Masonry		BRCA	$ -	$ -
04 22 00	Concrete Unit Masonry		CMUCA	$ -	$ -
04 22 80	Glass Masonry		GMCA	$ -	$ -
04 43 00	Stone Masonry		SMCA	$ -	$ -
04 50 00	Refractory Masonry		RMCA	$ -	$ -
04 60 00	Corrosion-resistant Masonry		CRMCA	$ -	$ -
04 70 00	Manufactured Masonry		MMCA	$ -	$ -
04 80 00	Masonry Mock-ups		MUSA	$ -	$ -
	SUBTOTAL MASONRY:				**$ -**
05 00 00	METALS:				
05 12 00	Structural Steel Framing		SFT	$ -	$ -
05 21 00	Steel Joist Framing		JFT	$ -	$ -
05 31 00	Steel Decking		MDSF	$ -	$ -
05 41 00	Structural Metal Stud Framing		SFCA	$ -	$ -
05 50 00	Metal Fabrications	-	GSF	$ -	$ -
05 51 00	Metal Stairs & Railings		LFMR	$ -	$ -
05 53 00	Metal Gratings		GSA	$ -	$ -
05 70 00	Decorative Metal	-	GSF	$ -	$ -
05 73 13	Glazed Decorative Metal Railings		LFDR	$ -	$ -
	SUBTOTAL METALS:				**$ -**
06 00 00	WOOD, PLASTICS & COMPOSITES:				
06 10 00	ROUGH CARPENTRY:				
06 11 00	Wood Framing	-	GSF	$ -	$ -
06 16 00	Sheathing		SCA	$ -	$ -
06 17 00	Shop-Fabricated Structural Wood	-	GSF	$ -	$ -
06 18 00	Glued-Laminated Construction	-	GSF	$ -	$ -
06 40 00	ARCHITECTURAL WOODWORK:				
06 41 00	Architectural Wood Casework		ACWLF	$ -	$ -

CONSTRUCTION SPECIFICATION INSTITUTE BREAKDOWN

YELLOW HIGHLIGHTED AREAS ARE FOR DATA INPUT

CSI 2012	Section Title	QUANTITY	UNIT	AVG PRICE	TOTAL $
06 42 00	Wood Paneling		PCA	$ -	$ -
06 43 00	Wood Stairs and Railings		LFWR	$ -	$ -
06 44 00	Ornamental Woodwork	-	GSF	$ -	$ -
06 46 00	Wood Trim		WTBF	$ -	$ -
06 48 00	Wood Doors & Frames		WDOPG	$ -	$ -
	SUBTOTAL WOOD, PLASTICS & COMPOSITES:				**$ -**
07 00 00	THERMAL & MOISTURE PROTECTION:				
07 10 00	Dampproofing and Waterproofing		WPCA	$ -	$ -
07 21 00	Thermal Insulation		TICA	$ -	$ -
07 22 00	Roof and Deck Insulation		RDICA	$ -	$ -
07 24 00	Exterior Insulation and Finish Systems		EWICA	$ -	$ -
07 26 00	Vapor Retarders		VRCA	$ -	$ -
07 27 00	Air Barriers		ABCA	$ -	$ -
07 31 00	Shingles and Shakes		SRCA	$ -	$ -
07 32 00	Roof Tiles		RTCA	$ -	$ -
07 33 00	Natural Roof Coverings		NRCCA	$ -	$ -
07 33 63	Vegetated Roofing		VRCA	$ -	$ -
07 41 00	Roof Panels		RPCA	$ -	$ -
07 42 00	Wall Panels		WPCA	$ -	$ -
07 44 00	Faced Panels		FPCA	$ -	$ -
07 46 00	Siding		SDGCA	$ -	$ -
07 51 00	Built-Up Bituminous Roofing		BUBCA	$ -	$ -
07 52 00	Modified Bituminous Membrane Roofing		MBMCA	$ -	$ -
07 53 00	Elastomeric Membrane Roofing		EMCA	$ -	$ -
07 54 00	Thermoplastic Membrane Roofing		TPMCA	$ -	$ -
07 55 00	Protected Membrane Roofing		PMCA	$ -	$ -
07 62 00	Sheet Metal Flashing and Trim		SMFCA	$ -	$ -
07 76 00	Roof Pavers		PAVCA	$ -	$ -
07 81 00	Applied Fireproofing		FPHSA	$ -	$ -
07 84 00	Firestopping	-	GSF	$ -	$ -
07 90 00	Joint Protection	-	GSF	$ -	$ -
07 92 00	Joint Sealants	-	GSF	$ -	$ -
07 95 00	Expansion Control		ECLF	$ -	$ -
	SUBTOTAL THERMAL & MOISTURE PROTECTION:				**$ -**
08 00 00	OPENINGS:				
08 11 00	Metal Doors and Frames		MDOPG	$ -	$ -
08 15 00	Plastic Doors		PDOPG	$ -	$ -
08 16 00	Composite Doors		CDOPG	$ -	$ -
08 31 00	Access Doors and Panels		APCA	$ -	$ -
08 32 00	Sliding Glass Doors		SGDCA	$ -	$ -
08 34 00	Special Function Doors		SFDCA	$ -	$ -
08 35 00	Folding Doors and Grilles		FDCA	$ -	$ -
08 36 00	Panel Doors		PDCA	$ -	$ -
08 38 00	Traffic Doors		TDCA	$ -	$ -
08 39 00	Pressure-Resistant Doors		PRDCA	$ -	$ -
08 41 00	Entrances and Storefronts		OPNG	$ -	$ -
08 44 01	Curtain Wall		CWCA	$ -	$ -
08 44 05	Glazed Assemblies		GACA	$ -	$ -
08 45 01	Translucent Wall Assemblies		TWCA	$ -	$ -
08 45 05	Translucent Roof Assemblies		TRCA	$ -	$ -
08 51 00	Metal Windows		MWCA	$ -	$ -
08 52 00	Wood Windows		WWCA	$ -	$ -
08 53 00	Plastic Windows		PWCA	$ -	$ -
08 54 00	Composite Windows		CWCA	$ -	$ -
08 56 00	Special Function Windows		SWCA	$ -	$ -
08 61 00	Roof Windows		RWCA	$ -	$ -
08 62 00	Unit Skylights		USLCA	$ -	$ -
08 63 00	Metal-Framed Skylights		MSLCA	$ -	$ -
08 64 00	Plastic-Framed Skylights		PSLCA	$ -	$ -
08 71 00	Door Hardware		OPG	$ -	$ -
08 74 00	Access Control Hardware		ACOPG	$ -	$ -
08 78 00	Special Function Hardware		SFOPG	$ -	$ -
08 81 00	Glass Glazing		GLZCA	$ -	$ -
08 83 00	Mirrors		MCA	$ -	$ -
08 87 00	Glazing Surface Films		FILMCA	$ -	$ -
08 88 00	Special Function Glazing		SFGCA	$ -	$ -
08 91 00	Louvers		LCA	$ -	$ -
08 95 00	Vents		VCA	$ -	$ -
	SUBTOTAL OPENINGS:				**$ -**

CONSTRUCTION SPECIFICATION INSTITUTE BREAKDOWN

YELLOW HIGHLIGHTED AREAS ARE FOR DATA INPUT

CSI 2012	Section Title	QUANTITY	UNIT	AVG PRICE	TOTAL $
09 00 00	FINISHES:				
09 21 13	Plaster Assemblies		PACA	$ -	$ -
09 28 00	Backing Boards and Underlayments		BBUSF	$ -	$ -
09 29 00	Gypsum Board		GWSCA	$ -	$ -
09 30 13	Ceramic Tiling		CTSCA	$ -	$ -
09 30 16	Quarry Tiling		QTSCA	$ -	$ -
09 30 19	Paver Tiling		PVTCA	$ -	$ -
09 30 23	Glass Mosaic Tiling		GMTCA	$ -	$ -
09 30 26	Plastic Tiling		PTSCA	$ -	$ -
09 30 29	Metal Tiling		MTCA	$ -	$ -
09 30 33	Stone Tiling		STCA	$ -	$ -
09 30 36	Concrete Tiling		CTCA	$ -	$ -
09 30 39	Brick Tiling		BTCA	$ -	$ -
09 51 00	Acoustical Ceilings		ACTCA	$ -	$ -
09 53 00	Acoustical Ceiling Suspension Assemblies		ACSSF	$ -	$ -
09 54 00	Specialty Ceilings		SCCA	$ -	$ -
09 57 00	Special Function Ceilings		SFCCA	$ -	$ -
09 61 00	Flooring Treatment		FTCA	$ -	$ -
09 61 19	Concrete Staining		CSCA	$ -	$ -
09 62 00	Specialty Flooring		SPFCA	$ -	$ -
09 64 00	Wood Flooring		WDFCA	$ -	$ -
09 65 00	Resilient Flooring		RESCA	$ -	$ -
09 66 00	Terrazzo Flooring		TERCA	$ -	$ -
09 67 00	Fluid-Applied Flooring		FAFCA	$ -	$ -
09 68 00	Carpeting		CPTCA	$ -	$ -
09 69 00	Access Flooring		ACFCA	$ -	$ -
09 72 00	Wall Coverings		WCCA	$ -	$ -
09 75 00	Stone Facing		STFCA	$ -	$ -
09 77 00	Special Wall Surfacing		SPWCA	$ -	$ -
09 83 16	Acoustic Ceiling Coating		ACCCA	$ -	$ -
09 84 13	Fixed Sound-Absorptive Panels		SDPCA	$ -	$ -
09 91 00	Painting		PTGCA	$ -	$ -
09 97 00	Special Coatings		SCTCA	$ -	$ -
	SUBTOTAL FINISHES:				**$ -**
10 00 00	SPECIALTIES:				
10 11 00	Visual Display Units		VDBCA	$ -	$ -
10 12 00	Display Cases		DCFCA	$ -	$ -
10 13 00	Directories		DFCA	$ -	$ -
10 14 00	Signage	-	GSF	$ -	$ -
10 17 00	Telephone Specialties	-	GSF	$ -	$ -
10 18 00	Informational Kiosks		IKEA	$ -	$ -
10 21 00	Compartments and Cubicles		C&CEA	$ -	$ -
10 21 13	Toilet Compartments		TCEA	$ -	$ -
10 21 16	Shower and Dressing Compartments		SDCEA	$ -	$ -
10 21 23	Cubicle Curtains and Track		CTLF	$ -	$ -
10 22 13	Wire Mesh Partitions		WMPCA	$ -	$ -
10 22 14	Expanded Metal Partitions		EMPCA	$ -	$ -
10 22 16	Folding Gates		FGCA	$ -	$ -
10 22 19	Demountable Partitions		DMPCA	$ -	$ -
10 22 23	Portable Partitions, Screens, and Panels		PTNCA	$ -	$ -
10 22 33	Accordion Folding Partitions		AFPCA	$ -	$ -
10 22 36	Coiling Partitions		CPCA	$ -	$ -
10 22 39	Folding Panel Partitions		FPPCA	$ -	$ -
10 22 43	Sliding Partitions		SLPCA	$ -	$ -
10 25 00	Service Walls		SWCA	$ -	$ -
10 26 00	Wall and Door Protection		WDPLF	$ -	$ -
10 28 00	Toilet, Bath, and Laundry Accessories	-	GSF	$ -	$ -
10 44 00	Fire Protection Specialties	-	GSF	$ -	$ -
10 51 00	Lockers		LOEA	$ -	$ -
10 55 00	Postal Specialties	-	GSF	$ -	$ -
10 56 00	Storage Assemblies	-	GSF	$ -	$ -
10 57 00	Wardrobe and Closet Specialties	-	GSF	$ -	$ -
10 71 00	Exterior Protection		EPCA	$ -	$ -
10 73 00	Protective Covers		PCCA	$ -	$ -
10 74 00	Manufactured Exterior Specialties	-	GSF	$ -	$ -
10 75 00	Flagpoles		FPEA	$ -	$ -
10 80 00	Other Specialties	-	GSF	$ -	$ -
	SUBTOTAL SPECIALTIES:				**$ -**
11 00 00	EQUIPMENT:				
11 12 00	Parking Control Equipment	-	GSF	$ -	$ -

CONSTRUCTION SPECIFICATION INSTITUTE BREAKDOWN

YELLOW HIGHLIGHTED AREAS ARE FOR DATA INPUT

CSI 2012	Section Title	QUANTITY	UNIT	AVG PRICE	TOTAL $
11 13 00	Loading Dock Equipment	-	GSF	$ -	$ -
11 14 00	Pedestrian Control Equipment	-	GSF	$ -	$ -
11 24 00	Maintenance Equipment	-	GSF	$ -	$ -
11 24 23	Window Washing Systems		WWSCA	$ -	$ -
11 24 29	Facility Fall Protection	-	GSF	$ -	$ -
11 26 00	Unit Kitchens	-	GSF	$ -	$ -
11 27 00	Photographic Processing Equipment	-	GSF	$ -	$ -
11 31 13	Residential Kitchen Appliances	-	GSF	$ -	$ -
11 31 23	Residential Laundry Appliances	-	GSF	$ -	$ -
11 40 00	Foodservice Equipment	-	GSF	$ -	$ -
11 41 23	Walk-In Coolers		WICFA	$ -	$ -
11 41 26	Walk-In Freezers		WIFFA	$ -	$ -
11 51 00	Library Equipment	-	GSF	$ -	$ -
11 52 00	Audio-Visual Equipment	-	GSF	$ -	$ -
11 53 00	Laboratory Equipment	-	GSF	$ -	$ -
11 61 00	Broadcast, Theater, and Stage Equipment	-	GSF	$ -	$ -
11 66 00	Athletic Equipment	-	GSF	$ -	$ -
11 67 00	Recreational Equipment	-	GSF	$ -	$ -
11 68 00	Play Field Equipment and Structures	-	GSF	$ -	$ -
11 70 00	Healthcare Equipment	-	GSF	$ -	$ -
11 90 00	Other Equipment	-	GSF	$ -	$ -
	SUBTOTAL EQUIPMENT:				**$ -**
12 00 00	FURNISHINGS:				
12 10 00	Art	-	GSF	$ -	$ -
12 21 00	Window Blinds		WBCA	$ -	$ -
12 22 00	Curtains and Drapes		CDCA	$ -	$ -
12 23 00	Interior Shutters		ISCA	$ -	$ -
12 24 00	Window Shades		WSCA	$ -	$ -
12 25 00	Window Treatment Operating Hardware		WOHLF	$ -	$ -
12 26 00	Interior Daylighting Devices	-	GSF	$ -	$ -
12 31 00	Manufactured Metal Casework		MCWLF	$ -	$ -
12 32 00	Manufactured Wood Casework		WCWLF	$ -	$ -
12 34 00	Manufactured Plastic Casework		PCWLF	$ -	$ -
12 35 00	Specialty Casework		SCWLF	$ -	$ -
12 36 00	Countertops		CTPLF	$ -	$ -
12 40 00	Furnishings and Accessories	-	GSF	$ -	$ -
12 48 00	Rugs and Mats		RMCA	$ -	$ -
12 50 00	Furniture	-	GSF	$ -	$ -
12 52 00	Seating		UNITS	$ -	$ -
12 61 00	Fixed Audience Seating		UNITS	$ -	$ -
12 63 00	Stadium and Arena Seating		UNITS	$ -	$ -
12 66 00	Telescoping Stands		LFR	$ -	$ -
12 93 00	Site Furnishings	-	GSF	$ -	$ -
	SUBTOTAL FURNISHINGS:				**$ -**
13 00 00	SPECIAL CONSTRUCTION:				
13 11 00	Swimming Pools		SPVOL	$ -	$ -
13 12 00	Fountains	-	GSF	$ -	$ -
13 21 00	Controlled Environment Rooms		CERFA	$ -	$ -
13 24 00	Special Activity Rooms		SARFA	$ -	$ -
13 28 00	Athletic and Recreational Special Construction		ARCFA	$ -	$ -
13 30 00	Special Structures		SSFA	$ -	$ -
13 34 00	Fabricated Engineered Structures		FESFA	$ -	$ -
13 42 00	Building Modules		BMFA	$ -	$ -
13 49 00	Radiation Protection		RPCA	$ -	$ -
	SUBTOTAL SPECIAL CONSTRUCTION:				**$ -**
14 00 00	CONVEYING EQUIPMENT:				
14 10 00	Dumbwaiters		LO	$ -	$ -
14 21 00	Electric Traction Elevators		LO	$ -	$ -
14 24 00	Hydraulic Elevators		LO	$ -	$ -
14 30 01	Escalators		ERFLT	$ -	$ -
14 30 05	Moving Walks		MWLF	$ -	$ -
14 40 00	Lifts		EA	$ -	$ -
14 91 00	Facility Chutes	-	GSF	$ -	$ -
14 92 00	Pneumatic Tube Systems		PTTLF	$ -	$ -
	SUBTOTAL CONVEYING EQUIPMENT:				**$ -**
21 00 00	FIRE SUPPRESSION:				
21 10 00	Water-Based Fire-Suppression Systems	-	GSF	$ -	$ -
21 11 00	Facility Service Piping	-	GSF	$ -	$ -

CONSTRUCTION SPECIFICATION INSTITUTE BREAKDOWN

YELLOW HIGHLIGHTED AREAS ARE FOR DATA INPUT

CSI 2012	Section Title	QUANTITY	UNIT	AVG PRICE	TOTAL $
21 12 00	Standpipes		VLF	$ -	$ -
21 13 13	Wet Pipe Sprinkler Systems		WPSFA	$ -	$ -
21 13 16	Dry Pipe Sprinkler Systems		DPSFA	$ -	$ -
21 13 19	Pre-action Sprinkler Systems		PASFA	$ -	$ -
21 20 00	Fire-Extinguishing Systems		FESFA	$ -	$ -
21 30 00	Fire Pumps	-	GSF	$ -	$ -
21 40 00	Fire-Suppression Water Storage		WSGAL	$ -	$ -
	SUBTOTAL FIRE SUPPRESSION:				**$ -**
22 00 00	PLUMBING:				
22 11 00	Water Distribution	-	GSF	$ -	$ -
22 12 00	Potable-Water Storage Tanks		PWGAL	$ -	$ -
22 13 00	Sanitary Sewerage	-	GSF	$ -	$ -
22 14 00	Storm Drainage	-	GSF	$ -	$ -
22 15 00	Compressed-Air Systems	-	GSF	$ -	$ -
22 31 00	Domestic Water Softeners	-	GSF	$ -	$ -
22 32 00	Domestic Water Filtration Equipment	-	GSF	$ -	$ -
22 33 00	Electric Domestic Water Heaters	-	GSF	$ -	$ -
22 34 00	Fuel-Fired Domestic Water Heaters	-	GSF	$ -	$ -
22 35 00	Domestic Water Heat Exchangers	-	GSF	$ -	$ -
22 41 00	Residential Plumbing Fixtures	-	GSF	$ -	$ -
22 42 00	Commercial Plumbing Fixtures	-	GSF	$ -	$ -
22 43 00	Healthcare Plumbing Fixtures	-	GSF	$ -	$ -
22 45 00	Emergency Plumbing Fixtures	-	GSF	$ -	$ -
22 46 00	Security Plumbing Fixtures	-	GSF	$ -	$ -
22 47 00	Drinking Fountains and Water Coolers	-	GSF	$ -	$ -
22 51 00	Swimming Pool Plumbing Systems	-	GSF	$ -	$ -
22 52 00	Fountain Plumbing Systems	-	GSF	$ -	$ -
22 60 00	Special Systems for Laboratories and Healthcare	-	GSF	$ -	$ -
22 61 00	Compressed-Air Systems	-	GSF	$ -	$ -
22 62 00	Vacuum Systems	-	GSF	$ -	$ -
22 63 00	Gas Systems	-	GSF	$ -	$ -
22 66 00	Chemical-Waste Systems	-	GSF	$ -	$ -
22 67 00	Processed Water Systems	-	GSF	$ -	$ -
	SUBTOTAL PLUMBING:				**$ -**
23 00 00	HEATING, VENTILATION & AIR CONDITIONING:				
23 07 13	Duct Insulation	-	GSF	$ -	$ -
23 07 16	HVAC Equipment Insulation	-	GSF	$ -	$ -
23 07 19	HVAC Piping Insulation	-	GSF	$ -	$ -
23 09 00	Instrumentation and Control for HVAC	-	GSF	$ -	$ -
23 11 00	Facility Fuel Piping	-	GSF	$ -	$ -
23 12 00	Facility Fuel Pumps	-	GSF	$ -	$ -
23 13 00	Facility Fuel-Storage Tanks	-	GSF	$ -	$ -
23 21 00	Hydronic Piping and Pumps	-	GSF	$ -	$ -
23 22 00	Steam and Condensate Piping and Pumps	-	GSF	$ -	$ -
23 23 00	Refrigerant Piping	-	GSF	$ -	$ -
23 24 00	Internal-Combustion Engine Piping	-	GSF	$ -	$ -
23 25 00	HVAC Water Treatment	-	GSF	$ -	$ -
23 31 00	HVAC Ducts and Casings	-	GSF	$ -	$ -
23 32 00	Air Plenums and Chases	-	GSF	$ -	$ -
23 33 00	Air Duct Accessories	-	GSF	$ -	$ -
23 34 00	HVAC Fans	-	GSF	$ -	$ -
23 35 00	Special Exhaust Systems	-	GSF	$ -	$ -
23 36 00	Air Terminal Units	-	GSF	$ -	$ -
23 37 00	Air Outlets and Inlets	-	GSF	$ -	$ -
23 38 00	Ventilation Hoods	-	GSF	$ -	$ -
23 40 00	HVAC Air Cleaning Devices	-	GSF	$ -	$ -
23 51 00	Breechings, Chimneys, and Stacks	-	GSF	$ -	$ -
23 52 00	Heating Boilers	-	GSF	$ -	$ -
23 53 00	Heating Boiler Feedwater Equipment	-	GSF	$ -	$ -
23 54 00	Furnaces	-	GSF	$ -	$ -
23 55 00	Fuel-Fired Heaters	-	GSF	$ -	$ -
23 56 00	Solar Energy Heating Equipment	-	GSF	$ -	$ -
23 57 00	Heat Exchangers for HVAC	-	GSF	$ -	$ -
23 61 00	Refrigerant Compressors	-	GSF	$ -	$ -
23 62 00	Packaged Compressor and Condenser Units	-	GSF	$ -	$ -
23 63 00	Refrigerant Condensers	-	GSF	$ -	$ -
23 64 00	Packaged Water Chillers	-	GSF	$ -	$ -
23 65 00	Cooling Towers	-	GSF	$ -	$ -
23 70 00	Central HVAC Equipment	-	GSF	$ -	$ -
23 71 00	Thermal Storage	-	GSF	$ -	$ -

CONSTRUCTION SPECIFICATION INSTITUTE BREAKDOWN

YELLOW HIGHLIGHTED AREAS ARE FOR DATA INPUT

CSI 2012	Section Title	QUANTITY	UNIT	AVG PRICE	TOTAL $
23 72 00	Air-to-Air Energy Recovery Equipment	-	GSF	$ -	$ -
23 73 00	Indoor Central-Station Air-Handling Units	-	GSF	$ -	$ -
23 74 00	Packaged Outdoor HVAC Equipment	-	GSF	$ -	$ -
23 75 00	Custom-Packaged Outdoor HVAC Equipment	-	GSF	$ -	$ -
23 76 00	Evaporative Air-Cooling Equipment	-	GSF	$ -	$ -
23 81 00	Decentralized Unitary HVAC Equipment	-	GSF	$ -	$ -
23 82 00	Convection Heating and Cooling Units	-	GSF	$ -	$ -
23 83 00	Radiant Heating Units	-	GSF	$ -	$ -
23 84 00	Humidity Control Equipment	-	GSF	$ -	$ -
	SUBTOTAL HEATING, VENTILATION & AIR CONDITIONING:				**$ -**
26 00 00	ELECTRICAL:				
26 09 00	Instrumentation and Control for Electrical Systems	-	GSF	$ -	$ -
26 11 00	Medium-Voltage Substations	-	GSF	$ -	$ -
26 12 00	Medium-Voltage Transformers	-	GSF	$ -	$ -
26 13 00	Medium-Voltage Switchgear	-	GSF	$ -	$ -
26 18 00	Medium-Voltage Circuit Protection Devices	-	GSF	$ -	$ -
26 21 00	Low-Voltage Electrical Service Entrance	-	GSF	$ -	$ -
26 22 00	Low-Voltage Transformers	-	GSF	$ -	$ -
26 23 00	Low-Voltage Switchgear	-	GSF	$ -	$ -
26 24 00	Switchboards and Panelboards	-	GSF	$ -	$ -
26 25 00	Enclosed Bus Assemblies	-	GSF	$ -	$ -
26 26 00	Power Distribution Units	-	GSF	$ -	$ -
26 27 00	Low-Voltage Distribution Equipment	-	GSF	$ -	$ -
26 32 00	Packaged Generator Assemblies	-	GSF	$ -	$ -
26 33 00	Battery Equipment	-	GSF	$ -	$ -
26 41 00	Facility Lightning Protection	-	GSF	$ -	$ -
26 42 00	Cathodic Protection	-	GSF	$ -	$ -
26 43 00	Surge Protective Devices	-	GSF	$ -	$ -
26 51 00	Interior Lighting	-	GSF	$ -	$ -
26 52 00	Emergency Lighting	-	GSF	$ -	$ -
26 53 00	Exit Signs	-	GSF	$ -	$ -
26 54 00	Classified Location Lighting	-	GSF	$ -	$ -
26 55 00	Special Purpose Lighting	-	GSF	$ -	$ -
26 56 00	Exterior Lighting	-	GSF	$ -	$ -
	SUBTOTAL ELECTRICAL:				**$ -**
27 00 00	COMMUNICATIONS:				
27 11 00	Communications Equipment Room Fittings	-	GSF	$ -	$ -
27 13 00	Communications Backbone Cabling	-	GSF	$ -	$ -
27 20 00	Data Communications	-	GSF	$ -	$ -
27 30 00	Voice Communications	-	GSF	$ -	$ -
27 41 00	Audio-Video Systems	-	GSF	$ -	$ -
27 42 00	Electronic Digital Systems	-	GSF	$ -	$ -
27 52 00	Healthcare Communications and Monitoring Systems.	-	GSF	$ -	$ -
	SUBTOTAL COMMUNICATIONS:				**$ -**
28 00 00	ELECTRONIC SAFETY EQUIPMENT:				
28 13 00	Access Control	-	GSF	$ -	$ -
28 16 00	Intrusion Detection	-	GSF	$ -	$ -
28 23 00	Video Surveillance	-	GSF	$ -	$ -
28 26 00	Electronic Personal Protection Systems	-	GSF	$ -	$ -
28 31 00	Fire Detection and Alarm	-	GSF	$ -	$ -
28 32 00	Radiation Detection and Alarm	-	GSF	$ -	$ -
28 33 00	Gas Detection and Alarm	-	GSF	$ -	$ -
28 34 00	Fuel-Oil Detection and Alarm	-	GSF	$ -	$ -
28 35 00	Refrigerant Detection and Alarm	-	GSF	$ -	$ -
28 36 00	Water Detection and Alarm	-	GSF	$ -	$ -
28 39 00	Mass Notification Systems	-	GSF	$ -	$ -
	SUBTOTAL ELECTRONIC SAFETY EQUIPMENT:				**$ -**
31 00 00	EARTHWORK:				
31 11 00	Clearing and Grubbing		CGPA	$ -	$ -
31 12 00	Selective Clearing		SCPA	$ -	$ -
31 13 00	Selective Tree and Shrub Removal and Trimming	-	GACRE	$ -	$ -
31 14 00	Earth Stripping and Stockpiling		ESSCY	$ -	$ -
31 20 00	Earth Moving		EMCY	$ -	$ -
31 22 00	Grading		GPA	$ -	$ -
31 23 00	Excavation and Fill		EBFCY	$ -	$ -
31 25 00	Erosion and Sedimentation Controls	-	GACRE	$ -	$ -
31 30 00	Earthwork Methods	-	GACRE	$ -	$ -
31 31 00	Soil Treatment		STPA	$ -	$ -

CONSTRUCTION SPECIFICATION INSTITUTE BREAKDOWN

YELLOW HIGHLIGHTED AREAS ARE FOR DATA INPUT

CSI 2012	Section Title	QUANTITY	UNIT	AVG PRICE	TOTAL $
31 32 00	Soil Stabilization		SSPA	$ -	$ -
31 34 00	Soil Reinforcement		SRPA	$ -	$ -
31 35 00	Slope Protection		SPPA	$ -	$ -
31 36 00	Gabions		GVSF	$ -	$ -
31 37 00	Riprap		RRCA	$ -	$ -
31 41 00	Shoring		SHVSF	$ -	$ -
31 43 00	Concrete Raising		CRPA	$ -	$ -
31 45 00	Vibroflotation and Densification		VADCY	$ -	$ -
31 46 00	Needle Beams		NBCY	$ -	$ -
31 48 00	Underpinning		UPCY	$ -	$ -
31 51 00	Anchor Tiebacks		ATBLF	$ -	$ -
31 52 00	Cofferdams		CVSFP	$ -	$ -
31 53 00	Cribbing and Walers		CWVSF	$ -	$ -
31 54 00	Ground Freezing		GFCY	$ -	$ -
31 62 00	Driven Piles		DPLF	$ -	$ -
31 63 00	Bored Piles		BPCY	$ -	$ -
31 64 00	Caissons		CASCY	$ -	$ -
31 66 00	Special Foundations	-	GSF	$ -	$ -
31 68 00	Foundation Anchors		FALF	$ -	$ -
31 70 00	Tunneling and Mining		TAMCY	$ -	$ -
	SUBTOTAL EARTHWORK:				**$ -**
32 00 00	EXTERIOR IMPROVEMENTS:				
32 11 00	Base Courses		BCCY	$ -	$ -
32 12 16	Asphalt Paving	100	APPA	$ -	$ -
33 13 13	Concrete Paving		CPPA	$ -	$ -
32 14 00	Unit Paving		UPPA	$ -	$ -
32 15 00	Aggregate Surfacing		ASCY	$ -	$ -
32 16 01	Curbs and Gutters		C&GLF	$ -	$ -
32 16 03	Sidewalks		SWPA	$ -	$ -
32 16 05	Driveways		DWPA	$ -	$ -
32 17 00	Paving Specialties	-	GACRE	$ -	$ -
32 18 00	Athletic and Recreational Surfacing		ARSPA	$ -	$ -
32 30 00	Site Improvements	-	GACRE	$ -	$ -
32 31 00	Fences and Gates		F&GLF	$ -	$ -
32 32 00	Retaining Walls		RWVSF	$ -	$ -
32 34 00	Fabricated Bridges		FBPA	$ -	$ -
32 35 00	Screening Devices		SDVSF	$ -	$ -
32 39 00	Manufactured Site Specialties	-	GACRE	$ -	$ -
32 70 00	Wetlands		WTLPA	$ -	$ -
32 80 00	Irrigation		IRRPA	$ -	$ -
32 91 00	Planting Preparation		PPPA	$ -	$ -
32 92 00	Turf and Grasses		TGPA	$ -	$ -
32 93 00	Plants		PEA	$ -	$ -
32 94 00	Planting Accessories		PAEA	$ -	$ -
	SUBTOTAL EXTERIOR IMPROVEMENTS:				**$ -**
33 00 00	UTILITIES:				
33 11 00	Water Utility Distribution Piping		WUPLF	$ -	$ -
33 12 00	Water Utility Distribution Equipment	-	GACRE	$ -	$ -
33 16 00	Water Utility Storage Tanks		WSGAL	$ -	$ -
33 20 00	Wells		WCGPM	$ -	$ -
33 31 00	Sanitary Utility Sewerage Piping		SUPLF	$ -	$ -
33 32 00	Wastewater Utility Pumping Stations	-	GACRE	$ -	$ -
33 33 00	Low Pressure Utility Sewerage	-	GACRE	$ -	$ -
33 34 00	Sanitary Utility Sewerage Force Mains		FMLF	$ -	$ -
33 36 00	Utility Septic Tanks		STGAL	$ -	$ -
33 39 00	Sanitary Utility Sewerage Structures		SUSEA	$ -	$ -
33 41 00	Storm Utility Drainage Piping		STPLF	$ -	$ -
33 42 00	Culverts		CLF	$ -	$ -
33 44 00	Storm Utility Water Drains		STDEA	$ -	$ -
33 45 00	Storm Utility Drainage Pumps		STPEA	$ -	$ -
33 46 00	Subdrainage		SDPLF	$ -	$ -
33 49 00	Storm Drainage Structures		STSEA	$ -	$ -
33 51 00	Natural-Gas Distribution		NGDLF	$ -	$ -
33 52 00	Liquid Fuel Distribution		LFDLF	$ -	$ -
33 56 00	Fuel-Storage Tanks		FSGAL	$ -	$ -
33 61 00	Hydronic Energy Distribution		HEDLF	$ -	$ -
33 63 00	Steam Energy Distribution		SEDLF	$ -	$ -
33 72 00	Utility Substations		KVA	$ -	$ -
33 73 00	Utility Transformers		KVA	$ -	$ -
33 75 00	High-Voltage Switchgear and Protection Devices	-	GACRE	$ -	$ -

CONSTRUCTION SPECIFICATION INSTITUTE BREAKDOWN

YELLOW HIGHLIGHTED AREAS ARE FOR DATA INPUT					
CSI 2012	Section Title	**QUANTITY**	**UNIT**	**AVG PRICE**	**TOTAL $**
33 77 00	Medium-Voltage Utility Switchgear and Protection Devices	-	GACRE	$ -	$ -
33 79 00	Site Grounding	-	GACRE	$ -	$ -
33 82 00	Communications Distribution	-	GACRE	$ -	$ -
33 83 00	Wireless Communications Distribution	-	GACRE	$ -	$ -
	SUBTOTAL UTILITIES:				$ -
	CONSTRUCTION TRADES SUBTOTAL			***#DIV/0!***	***$ -***
	Design Contingency		GSF	#DIV/0!	$ -
	Escalation - ENTER HERE: 5.00% per year		GSF	#DIV/0!	#DIV/0!
	CONSTRUCTION BASE			***#DIV/0!***	***#DIV/0!***
	CM or GC General Conditions		GSF	#DIV/0!	$ -
	CONSTRUCTION SUBTOTAL			***#DIV/0!***	***$ -***
	CM or GC Personnel		GSF	#DIV/0!	$ -
	CM Fee or GC Profit		GSF	#DIV/0!	$ -
	CM Pre-Construction Services		GSF	#DIV/0!	$ -
	CM Contingency		GSF	#DIV/0!	$ -
	FIXED LIMIT OF CONSTRUCTION COST			***#DIV/0!***	***#DIV/0!***
Related Construction Cost ALLOWANCES:					
Allowance #1	Text 1		GSF	#DIV/0!	#DIV/0!
Allowance #2	Text 2		GSF	#DIV/0!	#DIV/0!
Allowance #3	Text 3		GSF	#DIV/0!	#DIV/0!
Allowance #4	Text 4		GSF	#DIV/0!	#DIV/0!
Allowance #5	Text 5		GSF	#DIV/0!	#DIV/0!
Allowance #6	Text 6		GSF	#DIV/0!	#DIV/0!
Allowance #7	Text 7		GSF	#DIV/0!	#DIV/0!
Allowance #8	Text 8		GSF	#DIV/0!	#DIV/0!
ALTERNATES:					
Alternate #1	Description #1		GSF	#DIV/0!	$ -
Tree Removal	Description #2		GSF	#DIV/0!	$ -
	Contingency		GSF	#DIV/0!	$ -
	TOTAL Alternate #1			***#DIV/0!***	***$ -***
Alternate #2	Description #1		GSF	#DIV/0!	$ -
Add Tree Protection	Description #2		GSF	#DIV/0!	$ -
	Contingency		GSF	#DIV/0!	$ -
	TOTAL Alternate #2			***#DIV/0!***	***$ -***
Alternate #3	Description #1		GSF	#DIV/0!	$ -
PVC Storm Piping	Description #2		GSF	#DIV/0!	$ -
	Contingency		GSF	#DIV/0!	$ -
	TOTAL Alternate #3			***#DIV/0!***	***$ -***
Alternate #4	Description #1		GSF	#DIV/0!	$ -
Delete Eave Detail B	Description #2		GSF	#DIV/0!	$ -
	Contingency		GSF	#DIV/0!	$ -
	TOTAL Alternate #4			***#DIV/0!***	***$ -***
Alternate #5	Description #1		GSF	#DIV/0!	$ -
Add Eave Detail F	Description #2		GSF	#DIV/0!	$ -
	Contingency		GSF	#DIV/0!	$ -
	TOTAL Alternate #5			***#DIV/0!***	***$ -***
Alternate #6	Description #1		GSF	#DIV/0!	$ -
Add Penthouse	Description #2		GSF	#DIV/0!	$ -
	Contingency		GSF	#DIV/0!	$ -
	TOTAL Alternate #6			***#DIV/0!***	***$ -***
Alternate #7	Description #1		GSF	#DIV/0!	$ -
Add Eave Detail F	Description #2		GSF	#DIV/0!	$ -
	Contingency		GSF	#DIV/0!	$ -
	TOTAL Alternate #7			***#DIV/0!***	***$ -***
Alternate #8	Description #1		GSF	#DIV/0!	$ -
Add Penthouse	Description #2		GSF	#DIV/0!	$ -
	Contingency		GSF	#DIV/0!	$ -
	TOTAL Alternate #8			***#DIV/0!***	***$ -***

CONSTRUCTION SPECIFICATION INSTITUTE BREAKDOWN

YELLOW HIGHLIGHTED AREAS ARE FOR DATA INPUT				
CSI 2012 Section Title	**QUANTITY**	**UNIT**	**AVG PRICE**	**TOTAL $**

This template includes pre-set formulas, however, estimating professionals are ultimately responsible for the accuracy of the information submitted.

Building Name:	Enter Building Name Here		
Project Name:	Enter Project Name Here		
Building/Site Gross Area:	0 GSF	0.0 Acre	
Date of Estimate:	xx/xx/20xx		
Anticipated Construction Start:	xx/xx/20xx	**Document Date: 8/17/2017**	
Anticipated Construction Finish:	xx/xx/20xx		

UNIFORMAT 2 ESTIMATE - CONCEPTUAL BUDGET DETAIL

YELLOW HIGHLIGHTED AREAS ARE FOR DATA INPUT

LEVEL 1 / LEVEL 2 INFORMATION	**LEVEL 1 SUMMARY SUBTOTALS**	**BUDGET[1]**	**COST / S. F.**	**% OF TOTAL[2]**
A SUBSTRUCTURE				
A10 - FOUNDATIONS				
A1010 - STANDARD FOUNDATIONS			#DIV/0!	#DIV/0!
A1020 - SPECIAL FOUNDATIONS			#DIV/0!	#DIV/0!
A1030 - SLAB ON GRADE			#DIV/0!	#DIV/0!
A20 - BASEMENT CONSTRUCTION				
A2010 - BASEMENT EXCAVATION			#DIV/0!	#DIV/0!
A2020 - BASEMENT WALLS			#DIV/0!	#DIV/0!
	SUBTOTAL SUBSTRUCTURE	**$ -**	#DIV/0!	**#DIV/0!**
B SHELL				
B10 - SUPERSTRUCTURE				
B1010 - FLOOR CONSTRUCTION			#DIV/0!	#DIV/0!
B1020 - ROOF CONSTRUCTION			#DIV/0!	#DIV/0!
B20 - EXTERIOR CLOSURE				
B2010 - EXTERIOR WALLS			#DIV/0!	#DIV/0!
B2020 - EXTERIOR WINDOWS			#DIV/0!	#DIV/0!
B2030 - EXTERIOR DOORS			#DIV/0!	#DIV/0!
B30 - ROOFING				
B3010 - ROOF COVERING			#DIV/0!	#DIV/0!
B3020 - ROOF OPENINGS			#DIV/0!	#DIV/0!
	SUBTOTAL SHELL	**$ -**	#DIV/0!	**#DIV/0!**
C INTERIORS				
C10 - INTERIOR CONSTRUCTION				
C1010 - PARTITIONS			#DIV/0!	#DIV/0!
C1020 - INTERIOR DOORS			#DIV/0!	#DIV/0!
C1030 - FITTINGS / SPECIALTIES			#DIV/0!	#DIV/0!
C20 - STAIRCASES				
C2010 - STAIR CONSTRUCTION			#DIV/0!	#DIV/0!
C2020 - STAIR FINISHES			#DIV/0!	#DIV/0!
C30 - INTERIOR FINISHES				
C3010 - WALL FINISHES			#DIV/0!	#DIV/0!
C3020 - FLOOR FINISHES			#DIV/0!	#DIV/0!
C3030 - CEILING FINISHES			#DIV/0!	#DIV/0!
	SUBTOTAL INTERIORS	**$ -**	#DIV/0!	**#DIV/0!**
D SERVICES				
D10 - CONVEYING SYSTEMS				
D1010 - ELEVATORS & LIFTS			#DIV/0!	#DIV/0!
D1020 - ESCALATORS & MOVING WALKS			#DIV/0!	#DIV/0!
D1030 - OTHER CONVEYING SYSTEMS				
D20 - PLUMBING			#DIV/0!	#DIV/0!
D2010 - PLUMBING FIXTURES			#DIV/0!	#DIV/0!
D2020 - DOMESTIC WATER DISTRIBUTION			#DIV/0!	#DIV/0!
D2030 - SANITARY WASTE			#DIV/0!	#DIV/0!
D2040 - RAIN WATER DRAINAGE			#DIV/0!	#DIV/0!
D2090 - SPECIAL PLUMBING SYSTEMS			#DIV/0!	#DIV/0!
D30 - HVAC				
D3010 - ENERGY SUPPLY			#DIV/0!	#DIV/0!
D3020 - HEAT GENERATING SYSTEMS			#DIV/0!	#DIV/0!
D3030 - REFRIGERATION			#DIV/0!	#DIV/0!
D3040 - HVAC DISTRIBUTION SYSTEMS			#DIV/0!	#DIV/0!
D3050 - TERMINAL & PACKAGE UNITS			#DIV/0!	#DIV/0!
D3060 - HVAC CONTROLS & INSTRUMENTATION			#DIV/0!	#DIV/0!

UNIFORMAT 2 ESTIMATE - CONCEPTUAL BUDGET DETAIL

YELLOW HIGHLIGHTED AREAS ARE FOR DATA INPUT

LEVEL 1 / LEVEL 2 INFORMATION — LEVEL 1 SUMMARY SUBTOTALS	BUDGET[1]	COST / S. F.	% OF TOTAL[2]
D3070 - TESTING, ADJUSTING & BALANCING		#DIV/0!	#DIV/0!
D3090 - OTHER SPECIAL HVAC SYS. & EQUIPT.		#DIV/0!	#DIV/0!
D40 - FIRE PROTECTION			
D4010 - FIRE PROTECTION SPRINKLER SYSTEM		#DIV/0!	#DIV/0!
D4020 - STAND-PIPE & HOSE SYSTEMS		#DIV/0!	#DIV/0!
D4030 - FIRE PROTECTION SPECIALTIES		#DIV/0!	#DIV/0!
D4090 - OTHER FIRE PROTECTION SYSTEMS		#DIV/0!	#DIV/0!
D50 - ELECTRICAL			
D5010 - ELECTRICAL SERVICE & DISTRIBUTION		#DIV/0!	#DIV/0!
D5020 - LIGHTING & BRANCH WIRING		#DIV/0!	#DIV/0!
D5030 - COMMUNICATION & SECURITY SYSTEMS		#DIV/0!	#DIV/0!
D5090 - OTHER ELECTRICAL SYSTEMS		#DIV/0!	#DIV/0!
SUBTOTAL SERVICES	**$ -**	#DIV/0!	**#DIV/0!**
E EQUIPMENT & FURNISHINGS			
E10 - EQUIPMENT			
E1010 - COMMERCIAL EQUIPMENT		#DIV/0!	#DIV/0!
E1020 - INSTITUTIONAL EQUIPMENT		#DIV/0!	#DIV/0!
E1030 - VEHICULAR EQUIPMENT		#DIV/0!	#DIV/0!
E1090 - OTHER EQUIPMENT		#DIV/0!	#DIV/0!
E20 - FURNISHINGS			
E2010 - FIXED FURNISHINGS		#DIV/0!	#DIV/0!
E2020 - MOVABLE FURNISHINGS		#DIV/0!	#DIV/0!
SUBTOTAL EQUIPMENT & FURNISHINGS	**$ -**	#DIV/0!	**#DIV/0!**
F SPECIAL CONSTRUCTION & DEMOLITION			
F10 - SPECIAL CONSTRUCTION			
F1010 - SPECIAL STRUCTURES		#DIV/0!	#DIV/0!
F1020 - INTEGRATED CONSTRUCTION		#DIV/0!	#DIV/0!
F1030 - SPECIAL CONSTRUCTION SYSTEMS		#DIV/0!	#DIV/0!
F1040 - SPECIAL FACILITIES		#DIV/0!	#DIV/0!
F1050 - SPECIAL CONTROLS & INSTRUMENTATION		#DIV/0!	#DIV/0!
F20 - SELECTIVE BUILDING DEMOLITION			
F2010 - BUILDING ELEMENTS DEMOLITION		#DIV/0!	#DIV/0!
F2020 - HAZARDOUS COMPONENTS ABATEMENT		#DIV/0!	#DIV/0!
SUBTOTAL SPECIAL CONSTRUCTION & DEMOLITION	**$ -**	**#DIV/0!**	**#DIV/0!**
G BUILDING SITE WORK			
G10 - SITE PREPARATION			
G1010 - SITE CLEARING		#DIV/0!	#DIV/0!
G1020 - SITE DEMOLITION & RELOCATIONS		#DIV/0!	#DIV/0!
G1030 - SITE EARTHWORK		#DIV/0!	#DIV/0!
G1040 - HAZARDOUS WASTE REMEDIATION		#DIV/0!	#DIV/0!
G20 - SITE IMPROVEMENTS			
G2010 - ROADWAYS		#DIV/0!	#DIV/0!
G2020 - PARKING LOTS		#DIV/0!	#DIV/0!
G3030 - PEDESTRIAN PAVING		#DIV/0!	#DIV/0!
G2040 - SITE DEVELOPMENT		#DIV/0!	#DIV/0!
G2050 - LANDSCAPING		#DIV/0!	#DIV/0!
G30 - SITE CIVIL/MECH UTILITIES			
G3010 - WATER SUPPLY & DISTRIBUTION SYSTEMS		#DIV/0!	#DIV/0!
G3020 - SANITARY SEWER SYSTEMS		#DIV/0!	#DIV/0!
G3030 - STORM SEWER SYSTEMS		#DIV/0!	#DIV/0!
G3040 - HEATING DISTRIBUTION		#DIV/0!	#DIV/0!
G3050 - COOLING DISTRIBUTION		#DIV/0!	#DIV/0!
G3060 - FUEL DISTRIBUTION		#DIV/0!	#DIV/0!
G3090 - OTHER CIVIL / MECHANICAL UTILITIES		#DIV/0!	#DIV/0!
G40 - SITE ELECTRICAL UTILITIES			
G4010 - ELECTRICAL DISTRIBUTION		#DIV/0!	#DIV/0!
G4020 - EXTERIOR LIGHTING		#DIV/0!	#DIV/0!
G4030 - EXTERIOR COMMUNICATION & SECURITY		#DIV/0!	#DIV/0!
G4090 - OTHER SITE ELECTRICAL UTILITIES		#DIV/0!	#DIV/0!
G90 - OTHER SITE CONSTRUCTION			

UNIFORMAT 2 ESTIMATE - CONCEPTUAL BUDGET DETAIL

YELLOW HIGHLIGHTED AREAS ARE FOR DATA INPUT

LEVEL 1 / LEVEL 2 INFORMATION	LEVEL 1 SUMMARY SUBTOTALS	BUDGET[1]	COST / S. F.	% OF TOTAL[2]
G9010 - SERVICE TUNNELS			#DIV/0!	#DIV/0!
G9090 - OTHER SITE SYSTEMS & EQUIPMENT			#DIV/0!	#DIV/0!
	SUBTOTAL BUILDING SITE WORK	**$ -**	**#DIV/0!**	**#DIV/0!**
	CONSTRUCTION TRADES SUBTOTAL	***$ -***	***#DIV/0!***	***#DIV/0!***
	Design Contingency	$ -	#DIV/0!	#DIV/0!
	Escalation - ENTER HERE: 5.00% per year	#DIV/0!	#DIV/0!	#DIV/0!
	CONSTRUCTION BASE	***#DIV/0!***	***#DIV/0!***	***#DIV/0!***
	CM or GC General Conditions	#DIV/0!	#DIV/0!	#DIV/0!
	CONSTRUCTION SUBTOTAL	***#DIV/0!***	***#DIV/0!***	***#DIV/0!***
	CM or GC Personnel	$ -	#DIV/0!	#DIV/0!
	CM Fee or GC Profit	$ -	#DIV/0!	#DIV/0!
	CM Pre-Construction Services	$ -	#DIV/0!	#DIV/0!
	CM Contingency	$ -	#DIV/0!	#DIV/0!
	FIXED LIMIT OF CONSTRUCTION COST	***#DIV/0!***	***#DIV/0!***	***#DIV/0!***
Related Construction Cost ALLOWANCES:				
	Allowance #1 Text 1	$ -	#DIV/0!	#DIV/0!
	Allowance #2 Text 2	$ -	#DIV/0!	#DIV/0!
	Allowance #3 Text 3	$ -	#DIV/0!	#DIV/0!
	Allowance #4 Text 4	$ -	#DIV/0!	#DIV/0!
	Allowance #5 Text 5	$ -	#DIV/0!	#DIV/0!
	Allowance #6 Text 6	$ -	#DIV/0!	#DIV/0!
	Allowance #7 Text 7	$ -	#DIV/0!	#DIV/0!
	Allowance #8 Text 8	$ -	#DIV/0!	#DIV/0!
ALTERNATES:				
Alternate #1	Description #1	$ -	#DIV/0!	#DIV/0!
Tree Removal	Description #2	$ -	#DIV/0!	#DIV/0!
	Contingency	$ -	#DIV/0!	#DIV/0!
	TOTAL Alternate #1	***$ -***	***#DIV/0!***	***#DIV/0!***
Alternate #2	Description #1	$ -	#DIV/0!	#DIV/0!
Add Tree Protection	Description #2	$ -	#DIV/0!	#DIV/0!
	Contingency	$ -	#DIV/0!	#DIV/0!
	TOTAL Alternate #2	***$ -***	***#DIV/0!***	***#DIV/0!***
Alternate #3	Description #1	$ -	#DIV/0!	#DIV/0!
PVC Storm Piping	Description #2	$ -	#DIV/0!	#DIV/0!
	Contingency	$ -	#DIV/0!	#DIV/0!
	TOTAL Alternate #3	***$ -***	***#DIV/0!***	***#DIV/0!***
Alternate #4	Description #1	$ -	#DIV/0!	#DIV/0!
Delete Eave Detail B	Description #2	$ -	#DIV/0!	#DIV/0!
	Contingency	$ -	#DIV/0!	#DIV/0!
	TOTAL Alternate #4	***$ -***	***#DIV/0!***	***#DIV/0!***
Alternate #5	Description #1	$ -	#DIV/0!	#DIV/0!
Add Eave Detail F	Description #2	$ -	#DIV/0!	#DIV/0!
	Contingency	$ -	#DIV/0!	#DIV/0!
	TOTAL Alternate #5	***$ -***	***#DIV/0!***	***#DIV/0!***
Alternate #6	Description #1	$ -	#DIV/0!	#DIV/0!
Add Penthouse	Description #2	$ -	#DIV/0!	#DIV/0!
	Contingency	$ -	#DIV/0!	#DIV/0!
	TOTAL Alternate #6	***$ -***	***#DIV/0!***	***#DIV/0!***
Alternate #7	Description #1	$ -	#DIV/0!	#DIV/0!
Add Eave Detail F	Description #2	$ -	#DIV/0!	#DIV/0!
	Contingency	$ -	#DIV/0!	#DIV/0!
	TOTAL Alternate #7	***$ -***	***#DIV/0!***	***#DIV/0!***
Alternate #8	Description #1	$ -	#DIV/0!	#DIV/0!
Add Penthouse	Description #2	$ -	#DIV/0!	#DIV/0!

UNIFORMAT 2 ESTIMATE - CONCEPTUAL BUDGET DETAIL

YELLOW HIGHLIGHTED AREAS ARE FOR DATA INPUT

LEVEL 1 / LEVEL 2 INFORMATION	**LEVEL 1 SUMMARY SUBTOTALS**	**BUDGET**[1]	**COST / S. F.**	**% OF TOTAL**[2]
	Contingency	$ -	#DIV/0!	#DIV/0!
	TOTAL Alternate #8	***$ -***	***#DIV/0!***	***#DIV/0!***

This template includes pre-set formulas, however, estimating professionals are ultimately responsible for the accuracy of the information submitted.

[1] Budget = $$/SF x Building Gross Area

[2] % of Total = Budget/Fixed Limit of Construction Cost

Thematic Floor Plan Standards

Circulation	**010**	
Public Restrooms	**040**	
Classrooms	**100s**	
Classroom	110	
Classroom Service	115	
Laboratory Facilities	**200's**	
Laboratories	210, 220, 250	
Laboratory Service	215, 225, 255	Do not label or distinguish between Class, Open and Research Laboratories
Office Facilities	**300's**	
Office	310	
Office Service	315	
Conference Room	350	
Conference Room Service	355	
Study Facilities	**400's**	
Study	410	
Stacks	420	Use single color for these four room types. Use text and/or furniture layout to distinguish the room types.
Study / Stacks	430	
Processing	440	
Study Service	455	
Special Use Facilities	**500's**	
Athletic or Physical Education	520	Use text to distinguish between the different room types in this section
Spectator Seating	523	
Athletic or Physical Education Service	525	
Media Production	530	
Media Production Service	535	
Demonstration	550	
Demonstration Service	555	
Greenhouse	580	
Greenhouse Service	585	
Armory, Armory Service	510, 515	Contact UM Design Manager or Manager of Space Information for directions.
Clinic, Clinic Service	540, 545	
Field Building	560	
Animal Quarters, Animal Quarters Service	*570, 575*	*Place under Support and Support Services (700's)*
General Use Facilities	**600's**	If the building is primarily a general use building (e.g., Student Union) contact the Manager for Space Information for a more detailed Color Legend.
Assembly	610	Optional labels: Theater, Concert Hall, Chapel, etc.
Assembly Service	615	
Exhibition	620	Optional labels: Museums, Gallery, etc.
Exhibition Service	625	
Food Facility	630	Optional labels: Dining Hall, Cafeteria, Snack Bar, Restaurant, etc.
Food Facility Service	635	
Day Care	640	
Day Care Service	645	
Lounge	650	
Lounge Service	655	
Merchandising	660	Optional labels: Bookstore, Post Office, Ticket Office, Travel Office, etc.
Merchandising Service	665	
Recreation	670	Optional labels: Exercise Room, Weight Room, Billiards Room, Game Room ,
Recreation Service	675	Bowling Alley, TV Room, etc.
Meeting Room	680	
Meeting Room Service	685	
Support Facilities	**700's and additional Room Types**	
Central Computer or Telecom & Service	*710, 715*	***These spaces should not be labeled nor should they contain any fixed furniture or mechcanical information.***
Shop & Service	*720, 725*	
Central Storage & Service	*730, 735*	
Vehicle Storage & Service	*740, 745*	
Central Service & Service	*750, 755*	
Hazardous Materials & Service	*760, 765*	
Animal Quarters & Service	*570, 575*	
Building or Custodial Services	*020*	
Mechanical Rooms (including void spaces)	*030*	
Unfinished or Shell Space	*070*	
Health Care Facilities	**800's**	
Patient Room	810, 815, 820	Patient Room, Patient Room Service and Patient Bathrooms
Patient Service	830, 835	Nurse Station & Service
Patient Treatment & Examination	840, 845	Surgey & Service
Patient Treatment & Examination	850, 855	Treatment/Examination & Service
Patient Treatment & Examination	860, 865	Diagnostic Service Lab & Support
Patient Treatment & Examination	870	Central Supplies
Public Waiting Room	880	
Residental Facilites	**900's**	Contact UM Design Manager or Manager of Space Information

revised 2/29/2016

OUT TO BID

DESIGN GUIDELINES

1.0 CODES AND REGULATORY AGENCIES

2.0 PROJECT PROCEDURES

3.0 SUSTAINABILITY

4.0 SPECIAL INSTRUCTIONS TO DESIGNERS

5.0 SPECIAL BUILDING AREAS

6.0 TECHNICAL REQUIREMENTS

7.0 MASTER SPECIFICATIONS

8.0 PREFERRED MANUFACTURERS LIST

9.0 STANDARD DETAILS AND SCHEDULES

10.0 CHANGES TO DESIGN GUIDELINES

BUILDING COMMISSIONING

CONTRACTS & AGREEMENTS

3.0 SUSTAINABILITY

Provides criteria for sustainable design and LEED requirements.

	Last Update	Previous Version	Replaces Document
3.1 Sustainable Design and LEED Requirements	November 2017	October 2017	SID-K Sustainable Design and LEED® Requirements
3.2 Energy and Water Conservation	November 2017	October 2017	SID-D Energy and Water Conservation
3.2.1 Energy and Water Conservation Report Format – Projects $2M to $10 M Construction Cost	October 2015	July 2013	
3.2.2 Energy and Water Conservation Report Format – Projects Over $10M	November 2017	October 2015	
3.2.3 Energy Impact Statement	October 2015	May 2010	
3.3 Sustainable Products Portfolio	October 2010	August 2010	SID-S Sustainable Products Portfolio
3.4 Recycling Materials	March 2014		SID-O Recycling Materials

© 2018 Regents of the University of Michigan
Design by Michigan Creative

326 East Hoover, Ann Arbor, MI 48109-1002
Phone: (734) 763-3020
Contact Us

DESIGN GUIDELINE 3.1
SUSTAINABLE DESIGN AND LEED® REQUIREMENTS

Scope

The University of Michigan is committed to environmental stewardship and promotes implementation of sustainable design concepts. Many of these concepts are incorporated directly into various sections of the U-M Design Guidelines and Master Specifications. This section addresses additional requirements and resources with respect to sustainable design and LEED requirements.

Related Sections

U-M Design Guideline Section:
2.1 - Owner's Project Requirements and Basis of Design Documents

U-M Master Specification Sections:
7.0 MS015719 - Construction Air Quality
7.0 MS017420 - Construction and Demolition Waste Tracking

Related Documents:
AEC Title Block and Sustainable Facts Diagram
Building/Project Sustainability Summary
U-M LEED Project Registration Procedure

Reference Documents:
USGBC, "LEED® Reference Guide for Green Building Design and Construction"
USGBC, "LEED® Reference Guide for Building Design and Construction - Healthcare"

Design and Installation Requirements

Sustainable Design Requirements

All Projects

Prior to beginning Schematic Design, clarify the design objectives with respect to sustainable design, in conjunction with the U-M Design Manager. It is the University's expectation that sustainability be a consideration for all projects.

U-M Master Specification 015719 - Construction Air Quality shall be included in the contract documents and edited to be project specific. This specification provides requirements for construction air quality including requirements for bio-diesel fuel and exhaust after-treatment devices on construction equipment.

U-M Master Specification 017420 - Construction and Demolition Waste Tracking shall be included in the contract documents. This specification documents the disposal of waste through use of the U-M Waste Tracking Report. This specification shall not replace construction waste management specification sections and shall not be edited by the A/E.

Document all sustainability design concepts in the project OPR/BOD (Owner's Project Requirements/Basis of Design) document. 2.1 - Owner's Project Requirements and Basis of Design Documents provides a complete description of OPR/BOD requirements.

Upon completion of the Construction Documents phase, use the EPA website to determine if the project is eligible for Designed to Earn ENERGY STAR. A/E to process all required paper work should the project be eligible.

Projects Requiring Regental Approval

At the end of Schematic Design (SD) phase, assist the Design Manager with completing a Building/Project Sustainability Summary for posting on the AEC website. The Building/Project Sustainability Summary is to be updated at each design phase And a final summary shall be submitted at project completion.

Visual Display Requirements

Required for projects over $10M construction cost.

Produce a visual display. Include, at a minimum, the following:

- Building name
- Project name
- Project description
- Photo or rendering of project (cross section, perspective, or elevation)
- Site plan to depict project location
- AEC Title Block and Sustainable Facts Diagram (revise to be project specific)
- Simplified, project specific visual graphics to depict sustainability features (e.g. diagrams to explain how system work). Do not provide generic LEED credit descriptions.
- Energy conservation measures
- Overall energy savings when compared to ASHRAE 90.1 baseline. Include ASHRAE 90.1 version used.
- Overall water savings based on the Energy Policy Act of 1992 fixture performance requirements.
- Recognitions and certifications received (e.g. LEED, Designed to Earn Energy Star). Include certification logos.

Design Manger to coordinate review and approval of visual display.

Submit a digital copy of the visual display with Design Deliverables at CD phase for Owner's Review.

After project completion, CD phase visual display to be updated to reflect all Owner's Review comments, accepted Alternates and Owner's Options, recognitions and certifications received. Final visual display to be submitted in the following format:

- 11x17 digital pdf file in high resolution (minimum 300 pixels/inch resolution).
- 24x36 digital pdf file in high resolution (minimum 300 pixels/inch resolution).

Contact the AEC Sustainability Coordinator for example visual displays.

LEED Requirements

New Buildings and Additions over $10M construction cost (new construction only)

All new buildings and additions with an estimated construction budget greater than $10 million shall contact the Project Design Manager to determine project-specific LEED certification requirements.

LEED Registration

All projects pursuing LEED certification will be registered with LEED Online by the U-M AEC Sustainability Coordinator; from that point on the A/E's designated LEED Project Manager will be responsible for assigning and managing the attempted credits within LEED Online. See the U-M LEED Project Registration Procedure for complete details.

LEED Checklist and Communication Process

The A/E's designated LEED Project Manager shall be responsible for the management and execution of the following checklist and communication process, in addition to other documentation, calculations and processes required for LEED certification:

(a) At the conclusion of schematic design, develop a preliminary LEED Checklist utilizing the most current LEED Reference Guide for the appropriate rating system, including Addenda.
(b) The checklist should identify all items for which credit can be achieved, items for which credit is under consideration, and items for which no credit can be achieved.
(c) For items "under consideration", clarify steps required for this review and analysis, potential options, and potential cost and benefit. The U-M AEC Sustainability Coordinator and U-M Design Manager will assist in refining this list and provide direction on further action as design progresses to DD and CD phases.
(d) At the conclusion of DD phase, update the LEED Checklist. A clear direction should be established for "under consideration" items. Items should be included in scope, deleted from consideration, or included as bid alternates.
(e) At the conclusion of CD phase, update the LEED Checklist. The updated checklist should include any additions and/or subtractions to the project scope that may have occurred during design development and affect the total score anticipated at the conclusion of DD.

(f) After GBCI® completes its review of the LEED application, the LEED Project Manager shall conference with the project team and the U-M AEC Sustainability Coordinator and present all technical advice received from the GBCI® reviewers. Describe strategies to respond to points denied or information forms not approved. Conduct such conferences after every LEED review phase.
(g) At the completion of the construction phase, update the LEED Checklist. The updated checklist should include any additions and/or subtractions to the project scope that may have occurred during construction and affect the total score anticipated at the conclusion of CD.
(h) Upon receipt of LEED certification, the A/E's designated LEED Administrator shall notify the U-M AEC Sustainability Coordinator. A/E to obtain authorization from the AEC Sustainability Coordinator prior to publishing LEED certification results on any media platform.

Existing LEED Certified Buildings

Projects within LEED certified buildings shall be implemented so as not to jeopardize sustainable design and the LEED certification. A complete list of LEED certified buildings is located in the Sustainability Section of the AEC website.

Additional Resources

Projects involving demolition are encouraged to divert waste from landfills by taking advantage of recycling opportunities currently available through outside companies. Below is a list of recycling programs that AEC is aware of. Contact the AEC Sustainability Coordinator with questions.

Vinyl Composite Tile
- Armstrong World Industries, Inc.

Acoustic Ceiling Tile
- Armstrong World Industries, Inc.

Carpet
- Calvert's Roll-Off Containers, Inc. (operated by Recycle Ann Arbor)
- Great Lakes Recycling - GLR

Carpet Padding
- Recycle Ann Arbor-Calvert's

Great Lakes Recycling

DESIGN GUIDELINE 3.2
ENERGY AND WATER CONSERVATION

Summary

This Design Guideline applies to new buildings, building additions, building alterations and capital equipment replacements at the Ann Arbor, Dearborn and Flint campuses. Contact the Project Design Manager to determine when it applies to leased properties.

Consider energy and water conservation in all aspects of project design. Incorporate conservation measures as described herein and as requested by the Design Manager.

Throughout the design process, meetings shall be held to evaluate how the project is meeting the project's conservation targets and to review the conservation measures specific to the project.

Related Sections

U-M Design Guideline Sections:
2.1 Owner's Project Requirements and Basis of Design Documents
230030 Laboratory Ventilation Design

Related Documents:
Energy and Water Conservation Report Format-Projects $2M to $10M Construction Cost
Energy and Water Conservation Report Format-Projects Over $10M Construction Cost
Energy Impact Statement Format and Examples

Reference Documents:
ASHRAE 90.1-2013, "Energy Standard for Buildings Except Low-Rise Residential Buildings"
ASHRAE 189.1-2009, "Standard for the Design of High-Performance Green Buildings"
ASHRAE Handbook-2007, "HVAC Applications"

Energy Conservation Compliance

All projects

(a) Comply with ASHRAE Standard 90.1-2013.
(b) Incorporate the Mandatory Energy Conservation Measures (ECMs) listed herein.
(c) Evaluate the Potential ECMs listed herein and incorporate as appropriate.
(d) Incorporate the Water Conservation Measures listed herein.

Projects between $2M and $10M construction cost

In addition to the requirements applicable to all projects, perform the following:

(a) Comply with the Mandatory Provisions of ASHRAE 90.1 and utilize either the Prescriptive Path or the Energy Cost Budget (ECB) method.
(b) Utilize the United States Department of Energy's (DOE) COM*check* software (http://www.energycodes.gov/comcheck/) to demonstrate compliance.
(c) Document the impact of the ECMs in accordance with the Documentation Requirements listed herein.

Projects over $10M construction cost

In addition to the requirements applicable to all projects, perform the following:

(a) Exceed ASHRAE 90.1 baseline requirements by the percentage established for the project.
(b) Utilize the United States Department of Energy's COM*check* software to demonstrate compliance to the Mandatory Provisions of ASHRAE 90.1.
(c) In accordance with Appendix G: Performance Rating Method of ASHRAE 90.1, use a computer energy simulation program to establish a baseline energy consumption for the entire building and to calculate the percentage energy cost saved above the baseline.
(d) Document the impact of the ECMs in accordance with the Documentation Requirements listed herein.
(e) Provide an Energy Impact Statement as described herein.

Mandatory Energy Conservation Measures

The following ECMs shall be incorporated into every project as applicable to the project's scope.

(a) Window Blinds/Shades: Provide interior blinds/shades on south and west facing windows.
(b) Occupancy Schedules: Determine anticipated occupancy schedules in consultation with the Users and indicate these in the OPR/BOD Document, in the Energy Impact Statement, and in the energy simulation software output. Based on these schedules, indicate on the project control drawings the initial operating schedule for all mechanical and electrical systems and equipment.
(c) Part Load Efficiency: Design mechanical and electrical systems to run efficiently at partial loads.
(d) HVAC System Zoning: Zone HVAC systems by occupancy type, ventilation rate, and operating schedule to allow shutdown or setback during no/reduced occupancy. Utilize zoned shutdown for sections of systems where occupancy schedules vary widely and separate systems are not feasible.
(e) DDC VAV Control: Control room air volume and temperature with direct digital controlled variable air volume (VAV) assemblies.
(f) Standalone HVAC Systems: Provide standalone HVAC systems for areas that require 24/7 operation, to allow central systems to be shut down.
(g) Laboratories: See U-M Design Guideline 15910 Laboratory Ventilation for information regarding ECMs in labs.

(h) Building Envelope Thermal Scanning: For projects over $10M construction cost, perform infrared thermal scans of any existing envelope during design to identify areas needing improvement. Perform scans of the new building envelope during construction. Correct deficiencies found.
(i) Incandescent Lighting: Limit incandescent lighting to accent or special use.
(j) Lighting and Power Justification: Provide justification for any area that exceeds ASHRAE 90.1 lighting or electrical power limits.

Mandatory Evaluations of Potential Energy Conservation Measures

Evaluate the following ECMs in accordance with the Economic Evaluation of Energy Conservation Measures section of this Design Guideline. Incorporate any ECM into the project that meets the maximum payback criterion.

(a) Below-Grade Insulation: Improve the below-grade insulation R-value above the ASHRAE 90.1 required minimum.
(b) Wall Insulation: Improve the wall insulation R-value above the ASHRAE 90.1 required minimum.
(c) Roof Insulation: Improve the roof insulation R-value above the ASHRAE 90.1 required minimum.
(d) Glazing: Provide glass with reduced solar heat gain coefficients and fenestration systems with lower U values than the ASHRAE 90.1 required maximums.
(e) Server Rooms: Instead of electronic data server rooms located inside the project building, consolidate servers into data centers located outside of the project building.
(f) Chillers: Exceed ASHRAE 90.1 chiller efficiency. Include the impact of pump power reductions.
(g) Free Cooling: Where there is a year-around chilled water load in the building, use "Free Cooling" as part of the chilled water system. Free Cooling shall utilize an evaporative cooling tower coupled with a heat exchanger, closed circuit evaporative fluid coolers, or dry coolers to produce chilled water when seasonal temperatures permit. Evaporative towers should be separate or be able to be decoupled from the main cooling tower array.
(h) Heat Recovery: Where an air handling system's minimum outside air percentage is greater than 40 percent, use a heat recovery system to transfer heat from exhausted air to the outside air entering the system. Evaluate heat recovery (enthalpy) wheels, flat plate air-to-air heat exchangers, heat pipes (including pumped type), and run-around coils. Include the impact of additional pressure drop through each device type.
(i) Envelope Inspections: Increase the inspection of the exterior wall insulation and exterior fenestration systems. Energy savings evaluation to be based on a percentage reduction of the estimated annual energy consumed due to infiltration and thermal conduction through the building envelope.
(j) Lighting Controls: Where occupancy in auditoriums, classrooms, conference rooms and offices varies with time of day, provide occupancy sensing and day-lighting control to achieve minimum space lighting times and ventilation rates, and close VAV boxes to zero position if no occupancy is detected.
(k) Boilers: Exceed ASHRAE 90.1 boiler efficiency.
(l) HVAC: Exceed ASHRAE 90.1 mechanical cooling and heating equipment efficiencies.

(m) Kitchen Hoods: Provide variable volume kitchen exhaust hood systems.

Additional Energy Conservation Opportunities

Consider additional energy conservation opportunities including those listed below for application on the project.

(a) Optimum building aspect ratios (squareness and roof area vs. total area).
(b) Optimum building siting to respond to the climate. Minimize west and south facing windows. Optimize glass orientation and area. Consider double glass wall systems for south or west facades with large areas.
(c) Fenestration overhangs, setbacks, fins, or similar exterior shading devices.
(d) Light shelves to promote day lighting.
(e) Clerestories to reduce energy use while providing day-lighting, in lieu of horizontal glass surfaces or large windows.
(f) Fritted glass, in particular for atriums, winter gardens, and similar type spaces with roofs containing a large percentage of glass.
(g) For renovation projects where fenestration or glazing will not be replaced, consider window films to improve energy performance.
(h) Vegetated roofs.
(i) Improved ventilation air flow efficiency by reducing the pressure drop of air system components and ductwork. In particular, consider for air systems that run continuously 24/7.
(j) Chilled beams for areas with large sensible loads and moderate ventilation air requirements.
(k) Displacement/impingement ventilation systems for large spaces with high ceilings.
(l) Heat recovery systems that recover heat from heat rejection equipment or from other available "waste" heat in the building.

Economic Evaluation of Energy Conservation Measures

It is the intent that ECMs incorporated by the project will have payback periods less than the maximum payback periods stated below.

ECM Simple Payback Calculations and Criterion

Evaluate the financial metrics of each ECM.

(a) Calculate the simple payback period of each ECM using:

$$\textit{Simple Payback Period} = \frac{\textit{Incremental Capital Cost of the ECM}}{\textit{Annual Energy Savings} - \textit{Incremental Maintenance Costs of the ECM}}$$

(b) Determine the service life of each ECM in accordance with the ASHRAE Handbook Chapter 36, "Costs of Owning and Operating Equipment." For ECMs not covered in the ASHRAE Handbook, contact the Design Manager for U-M input on their service lives.

(c) Where the service life of two alternative systems is significantly different from each other, include the replacement cost of the shorter lived system in the analysis.

(d) Use the following table to determine whether each ECM meets the maximum simple payback criterion and should or should not be incorporated.

Service Life of ECM (years)	Maximum Simple Payback Period (years)
15	6
20 or More	8

(a) For fenestration and glazing, use a maximum simple payback period of 10 years. For membrane roof insulation, use 12 years. For all other insulation, use a maximum simple payback period of 30 years.

Energy Calculations

Utilize a computer energy simulation program for energy use calculations that meets the requirements of ASHRAE 90.1.

Energy Costs

When evaluating ECMs, use the current utility costs available at http://www.plantops.umich.edu/utilities/Utilities/utility_rates.php.

Maintenance Costs

Include significant maintenance cost impacts if anticipated as a result of an ECM. Submit a comparative equipment list detailing the two options being analyzed to the Design Manager and request the necessary maintenance unit and annual costs.

Water Conservation Compliance

All projects

(a) Incorporate water conservation measures that in aggregate use 20 percent less water than a baseline water use (not including irrigation) based on Energy Policy Act of 1992 fixture performance requirements (which are incorporated into the Michigan Plumbing Code).

(b) Incorporate the following mandatory water conservation measures:

- Dual flush water closets.
- Waterless or 1/8 gallon per flush urinals.
- 2 GPM shower heads.

(c) Incorporate additional measures as required to meet the 20 percent water conservation target. (1/2 GPM aerators for lavatory faucets are required by the plumbing code and thus may not be used as a credit toward the 20 percent target.)

(d) Document the impact of the Water Conservation Measures in accordance with the Documentation Requirements listed below.
(e) Projects unable to meet this requirement shall obtain approval through use of the U-M Building Design Sustainability - Exemption Request Form.

Documentation Requirements

Provide documentation in accordance with Design Guideline 2.1, the Design Deliverables and as follows.

When using the Energy and Water Conservation Report Format form, assure hidden text is turned "on" and carefully review additional information and guidance notes.

Projects between $2M and $10M construction cost

Starting at the Schematic Design (SD) phase and expanding during the Design Development (DD) and Construction Documents (CD) phases, provide the following information utilizing the Energy and Water Conservation Report Format form provided as a Related Document.

(a) A copy of a completed COM*check* compliance report.
(b) If the ECB method is used, a summary of the computer energy simulation software output and a narrative explaining how compliance was attained using the ECB method.
(c) Explanation of all ECMs evaluated for the project. Provide summary calculations demonstrating the simple payback period of each measure.
(d) Explanation of all Water Conservation Measures applied to the project and their predicted results.
(e) Explanation of which Mandatory Energy Conservation Measures and Mandatory Energy Evaluations apply to the project and how they will be implemented.

Update and submit the CD phase report after project award to reflect accepted Alternates and Owner's Options, include updated executable energy model files if the ECB method was used.

Projects over $10M construction cost

As part of the program and concept design report, identify the architectural, mechanical, and electrical energy conservation technologies specific to the project that will be utilized to provide an energy efficient building.

Provide the following information utilizing the Energy and Water Conservation Report Format form provided as a Related Document.

During the Schematic Design Phase, provide:

(a) Calculated values for the *baseline building performance*. The *proposed building performance*, and the percentage improvement, when applicable, is also strongly preferred but is not required at SD Phase.

(b) A copy of the completed COM*check* compliance report demonstrating compliance to the Mandatory Provisions of ASHRAE 90.1.
(c) Complete data files (including all executable files necessary to allow U-M to "run" the energy model) from the energy simulation program including a breakdown of energy usage by at least the following components: lights, internal equipment loads, service water heating equipment, space heating equipment, space cooling and heat rejection equipment, fans, and other HVAC equipment (such as pumps). The output reports shall also show the amount of time any loads are not met by the HVAC system for the *baseline building design* and the *proposed building design*. The proposed building design shall not have more "unmet hours" than the baseline building.
(d) An explanation of any error messages noted in the simulation program output.
(e) Explanation of which Mandatory Energy Conservation Measures and Mandatory Energy Evaluations apply to the project and how they will be implemented.
(f) Explanation of all other ECMs to be applied to the project. Include summary calculations demonstrating the simple payback period of each measure (see the "Economic Evaluation of Energy Conservation Measures" section of this Guideline). List ECMs planned for the *proposed building design* and indicate the relative contribution each will make toward exceeding ASHRAE 90.1. This list shall document all energy features that differ between the *baseline building performance* and the *proposed building performance* calculations.
(g) Explanation of all Water Conservation Measures applied to the project and their predicted results.

During the Design Development and Construction Document phases, provide:
(a) Calculated values for the baseline building performance, the proposed building performance, and the percentage improvement, when applicable.
(b) Updates of all the energy and water conservation documentation required to be submitted at the SD phase.

Update and submit the CD phase report after project award to reflect accepted Alternates and Owner's Options, include updated executable energy model files.

Energy Impact Statement

For projects over $10M construction cost, provide an Energy Impact Statement. Utilize the form provided as a Related Document.

ENERGY AND WATER CONSERVATION REPORT FORMAT
PROJECTS BETWEEN $2M AND $10M CONSTRUCTION COST

Cover Page

Executive Summary

Energy conservation measures (ECMs) were evaluated per the requirements of U-M Design Guideline 3.2. The total estimated cost savings and first cost of the recommended ECMs for this project are summarized below:

Estimated Annual Energy Cost Avoidance w/ECMs:	$152,300
Total Estimated First Cost of ECMs:	$1,210,000
Over-all Simple Payback (years):	7.9
KWH/Year Savings:	XXXXX
Therms/Year Savings:	XXXXX

A requirement of U-M Design Guideline 3.2 is for designs to use 20% less water compared to designs that exactly meet the building code. The estimated water savings for this project are summarized below:

Estimated Total Annual Water Savings:	41,000 gallons
Annual Water use w/o Water Conservation Measures:	200,000 gallons
Percent Savings Versus Code Requirement:	21%

Table 1: Summary of ECM Evaluations

Table 1 summarizes every energy conservation measure evaluated by the design team for this particular project, along with various ECM financial metrics.

Table 1: Summary of ECMs Evaluated

ECM No.	Description	First Cost Estimate	Annual Costs Savings	Simple Payback	ROI	Persistence[1] H/M/L	Accepted Yes/No	Comments
1a	Additional 0.75" Wall Insulation	$180,000	$14,000	12.9	7.8%	H	**N**	
1b	Additional 1" Wall Insulation	$300,000	$16,500	18.2	5.5%	H	**N**	
1c	Additional 1.5" Wall Insulation	$350,000	$18,400	19.0	5.3%	H	**Y**	
2a	Glass SHGC =0.38	$186,000	$7,500	24.8	4.0%	M	**N**	
2b	Glass SHGC =0.33	$190,000	$8,000	23.8	4.2%	M	**Y**	
2c	Argon Filled Triple Glazed Glass SHGC = 0.26	$265,000	$13,400	19.8	5.1%	L	**N**	Seal life guaranteed only 10 years. Slight gray tint.
3	Day Lighting Sensors, Atrium	$42,000	$12,000	3.5	28.6%	M	**Y**	
4	Desiccant Wheel	$200,000	$40,000	5.0	20.0%	M	**Y**	
5	Exterior Shades, South Façade	$78,000	$15,000	5.2	19.2%	H	**Y**	
6	Increase Thermostat Deadband	$0	$7,000	N/A	N/A	L	**Y**	
7	Free Cooling Process Load	$350,000	$55,000	6.4	15.7%	H	**Y**	
8	Shower Heat Recovery Device	$24,000	$3,000	8.0	12.5%	L	**N**	Maintenance issues

Note 1: Persistence represents an opinion of the probability that the estimated energy savings will be fully realized.

Table 2: Water Conservation Measures and Predicted Results

Table 2 indicates the water saving measures and resulting percent water savings predicted for this project versus a project constructed to meet building code requirements (building code requirements are based on Energy Policy Act of 1992 fixture performance dictates). The requirement of U-M Design Guideline 3.2 is for designs to provide projects that use 20% less water than projects designed to exactly meet the building code.

Table 2: Water Conservation

Water Conservation Measure	Estimated Annual Savings (Gallons)
Dual Flush Water Closets	7,000
Waterless or 1/8 Gallon Per Flush Urinals	5,000
HVAC Condensate Used For Cooling Tower Make-Up	8,000
2 GPM Shower Heads	12,000
Gray Water Recovery	9,000

Estimated Total Annual Water Savings:	**41,000**
Annual Water use w/o Water Conservation Measures:	**200,000**
Estimated Percentage Savings:	**21%**

Tables 3 and 4:

U-M Design Guideline 3.2 requires that all projects implement certain "mandatory" energy conservation measures, and it requires that other energy conservation measures be "evaluated" for every project. Tables 3 and 4 indicate which of the mandatory and evaluated measures were found applicable to the project.

Table 3: Review of Mandatory Energy Conservation Measures

Mandatory ECM No.	Description	Implemented Yes/No	Comments	ECM Cross Ref.
a	Window Blinds/Shades	Y		ECM 9
b	Occupancy Schedules	Y		
c	Part Load Efficiency	Y		
d	HVAC System Zoning	Y		ECM 8
e	DDC VAV Control	Y		
f	Standalone HVAC Systems	N	No process areas.	
g	Laboratory ECMs	N	Not a lab building.	
h	Building Envelope Thermal Scanning	Y		ECM 4
i	Limit Incandescent Lighting	Y		
j	Lighting and Power Justification	N		

Table 4: Review of Mandatory Energy Evaluations

Mandatory Evaluation No.	Description	Implemented Yes/No	Comments	ECM Cross Ref.
a	Additional Below-Grade Insulation			
b	Additional Wall Insulation			
c	Additional Roof Insulation			
d	Improved Glazing (1)			
e	Eliminate Server Rooms			
f	High Efficiency Chiller (1)			
g	Free Cooling			
h	Heat Recovery			
i	Increased Envelope Inspections			
j	Occupancy/Daylight Sensing			
k	High Efficiency Boiler (1)			
l	High Efficiency HVAC Equipment (1)			
m	Variable Volume Kitchen Hoods			

Note 1: Performance/efficiency better than required by code.

Table 5: Energy Cost Assumptions:

Table 5 reports the energy cost assumptions utilized for energy cost calculations.

Table 5: Energy Costs Assumptions

Energy Type	Cost	Comments
Electricity	$0.079 /kwh	DTE Direct Purchase Rate
Natural Gas	$0.842/therm	MichiCon Direct Purchase Rate
District Steam	$1.90/therm	U-M Utility Rate
District Chilled Water	$1.07/therm	U-M Utility Rate

ENERGY AND WATER CONSERVATION REPORT FORMAT
PROJECTS OVER $10M CONSTRUCTION COST

Executive Summary

Energy conservation measures (ECMs) were evaluated using ASHRAE 90.1 Appendix G procedures. Appendix G requires estimated savings be compared to a *Baseline Building* that exactly meets ASHRAE 90.1 energy code requirements.

The version of the ASHRAE standard that this project was evaluated against was ASHRAE 90.1-

The estimated total annual cost savings by implementing the recommended ECMs is , which is equivalent to an annual percent savings of compared to a ASHRAE 90.1 *Baseline Building*.

The estimated total annual water savings by implementing the recommended water conservation measures is , which is equivalent to an annual percent savings of compared to a building complying with the Michigan Plumbing Code.

Table 1: Recommended ECMs (ECM Interactions Not Accounted For)

Table 1 lists all the ECMs that are recommended for implementation on this project. It indicates the savings potential for each ECM without regard to the impact ECMs may have upon one another. Because of such "interactions", the actual cost savings for some ECMs will be less than when they are analyzed on a stand-alone basis. For example, the savings from an ECM that reduces lighting energy will be partially offset by increased space heating requirements due to less light energy heating the space. Table 2 accounts for such ECM interactions.

Table 1: Recommended ECMs (ECM interactions not accounted for)

ECM No.	Description	Dollars/Year Savings	First Cost
1c	Increase Wall Insulation to 2.75"	$18,400	$350,000
2b	Improved Window Performance, SHGC = 0.33, U = 0.44	$8,000	$190,000
3	Day Lighting Sensors, Atrium	$12,000	$42,000
4	Desiccant Wheel	$40,000	$200,000
5	Exterior Shades, South Façade	$15,000	$78,000
6	Increase Thermostat Deadband	$7,000	$0
7	Install Free Cooling System	$55,000	$350,000
	Total First Cost:		$1,210,000
	Total Savings (no interactions accounted for):	**$155,400**	

Table 2: Summary ECM Savings (with ECM Interactions)

Table 2 reports the total estimated ECM savings with ECM interactions taken into account. Where combinations of ECMs are listed, it indicates that those ECMs interact with one another and therefore had to be analyzed as a group.

Table 2: Summary ECM Savings (with ECM interactions)

ECM No.	Description	Dollars/Year Savings
Combo 1	Combines ECMs 1c,2b,3,5	$50,300
ECM 4	Desiccant Wheel	$40,000
ECM 6	Increase Thermostat Deadband	$7,000
ECM 7	Install Free Cooling System	$55,000
	Total Savings (interactions accounted for):	**$152,300**

Table 3: Energy Conservation Predicted Results

Table 3 indicates the percent savings for versus a similar building constructed to exactly meet energy code requirements. The estimated annual energy cost for the building without the recommended ECMs is presented first; the energy cost for the same building with the recommended ECMs implemented is presented second.

Table 3: Energy Conservation Predicted Results[1]

Estimated Energy Costs w/o ECMs[2]	Dollars/Year
ASHRAE Base Building	$420,000
Elevators	$15,000
Process Cooling	$12,000
Outdoor Lights	$4,200
Total Energy Cost w/o ECMs:	$451,200
Estimated Annual Energy Cost Avoidance w/ECMs:	**$152,300**
Estimated Percentage Cost Avoidance:	**34%**
Total Estimated First Cost of ECMs:	**$1,210,000**
Over-all Simple Payback (years):	**7.9**

Note 1: Compared to a baseline ASHRAE building using ASHRAE 90.1 Appendix G methodology. Actual energy use and savings may vary due to occupancy levels, occupancy schedules, utility rates, and other factors different than assumed in the analysis.
Note 2: Energy use break-down reported per ASHRAE 90.1 Appendix G requirements.

Table 4: Estimated Annual Savings in Energy Units, per ECM

Table 4 reports the estimated savings in energy units, with ECM interactions taken into account. Where combinations of ECMs are listed, it indicates that those ECMs interact with one another and therefore had to be analyzed as a group.

Table 4: Estimated Annual Savings in Energy Units, per ECM

ECM No.	Description	KWH/Year Savings	Therms/Year Savings
Combo 1	Combines ECMs 1c,2b,3,5		
ECM 4	Desiccant Wheel		
ECM 6	Increase Thermostat Deadband		
ECM 7	Install Free Cooling System		
		Total:	

Table 5: Water Conservation Measures and Predicted Results

Table 5 indicates the water saving measures and resulting percent water savings predicted for this project versus a project constructed to meet building code requirements (building code requirements are based on Energy Policy Act of 1992 fixture performance dictates). The requirement of U-M Design Guideline 3.2 is for designs to provide projects that use 20% less water than projects designed to exactly meet the building code.

Table 5: Water Conservation

Water Conservation Measure	Estimated Annual Savings (Gallons)
Dual Flush Water Closets	7,000
Waterless or 1/8 Gallon Per Flush Urinals	5,000
HVAC Condensate Used For Cooling Tower Make-Up	8,000
2 GPM Shower Heads	12,000
Gray Water Recovery	9,000

Estimated Total Annual Water Savings: 41,000

Annual Water use w/o Water Conservation Measures: 200,000

Estimated Percentage Savings: 21%

Table 6: Summary of ECM Evaluations

Table 6 summarizes every ECM evaluated by the design team for this particular project, along with various ECM financial metrics. For a detailed description and analysis of individual ECMs, please see the Appendices.

Table 6: Summary of ECM Evaluated

ECM No.	Description	First Cost Estimate	Annual Costs Savings	Simple Payback	ROI	Persistence[1] H/M/L	Accepted Yes/No	Comments
1a	Additional 0.75" Wall Insulation	$180,000	$14,000	12.9	7.8%	H	**N**	SD design/estimate included insulation 1" thicker than required by code.
1b	Additional 1" Wall Insulation	$300,000	$16,500	18.2	5.5%	H	**N**	
1c	Additional 1.5" Wall Insulation	$350,000	$18,400	19.0	5.3%	H	**Y**	
2a	Glass SHGC =0.38	$186,000	$7,500	24.8	4.0%	M	**N**	
2b	Glass SHGC =0.33	$190,000	$8,000	23.8	4.2%	M	**Y**	
2c	Argon Filled Triple Glazed Glass SHGC = 0.26	$265,000	$13,400	19.8	5.1%	L	**N**	Seal life guaranteed only 10 years. Slight gray tint.
3	Day Lighting Sensors, Atrium	$42,000	$12,000	3.5	28.6%	M	**Y**	
4	Desiccant Wheel	$200,000	$40,000	5.0	20.0%	M	**Y**	
5	Exterior Shades, South Facade	$78,000	$15,000	5.2	19.2%	H	**Y**	
6	Increase Thermostat Deadband	$0	$7,000	N/A	N/A	L	**Y**	
7	Free Cooling Process Load	$350,000	$55,000	6.4	15.7%	H	**Y**	
8	Shower Heat Recovery Device	$24,000	$3,000	8.0	12.5%	L	**N**	Maintenance issues

Note 1: Persistence represents an opinion of the probability that the estimated energy savings will be fully realized.

Useful Information:

KWH: Kilowatt Hours

MBTU: Thousands of British Thermal Units

Therms x 100 = MBTU

KWH x 3.413 = MBTU

Appendix A

Table A1: Energy Cost Assumptions:

Table A1 reports the energy cost assumptions utilized for energy cost calculations.

Table A1: Energy Costs Assumptions

Energy Type	Cost	Comments
Electricity	$0.079 /kwh	DTE Direct Purchase Rate
Natural Gas	$0.842/therm	MichiCon Direct Purchase Rate
District Steam	$1.90/therm	U-M Utility Rate
District Chilled Water	$1.07/therm	U-M Utility Rate

Table A2: Accepted ECMs (no ECM interactions) Additional Information

Table A2 presents the estimated annual cost and energy savings, and the relative contribution each ECM contributed toward total savings. Electrical and gas savings for each ECM have been converted to energy units of MBTU and combined.

Table A2: Accepted ECMs (no ECM interactions) Additional Information

ECM No.	Description	Dollars/Yr Savings	% of Total $ Savings	MBTU/Yr Savings	% of Total MBTU Savings	First Cost
1c	Increase Wall Insulation to 2.75"	$18,400	11.8%	450	16.8%	$350,000
2b	Improved Window Performance, SHGC = 0.33, U = 0.44	$8,000	5.1%	183	6.8%	$190,000
3	Day Lighting Sensors, Atrium	$12,000	7.7%	350	13.1%	$42,000
4	Desiccant Wheel	$40,000	25.7%	600	22.4%	$200,000
5	Exterior Shades, South Façade	$15,000	9.7%	224	8.4%	$78,000
6	Increase Stat Deadband	$7,000	4.5%	170	6.4%	$0
7	Install Free Cooling System	$55,000	35.4%	700	26.1%	$350,000
	Total First Cost:					**$1,210,000**
	Total Cost Savings:	**$155,400**				
	Total Energy Savings:			**2,677**		

Tables A3 and A4:

U-M Design Guideline 3.2 requires that all projects implement certain "mandatory" energy conservation measures, and it requires that other energy conservation measures be "evaluated" for every project. Tables A3 and A4 indicate which of the mandatory and evaluated measures were found applicable to the project.

Table A3: Review of Mandatory Energy Conservation Measures

Mandatory ECM No.	Description	Implemented Yes/No	Comments	ECM Cross Ref.
a	Window Blinds/Shades	Y		ECM 9
b	Occupancy Schedules	Y		
c	Part Load Efficiency	Y		
d	HVAC System Zoning	Y		ECM 8
e	DDC VAV Control	Y		
f	Standalone HVAC Systems	N	No process areas.	
g	Laboratory ECMs	N	Not a lab building.	
h	Building Envelope Thermal Scanning	Y		ECM 4
i	Limit Incandescent Lighting	Y		
j	Lighting and Power Justification	N		

Table A4: Review of Mandatory Energy Evaluations

Mandatory Eval. No.	Description	Implemented Yes/No	Comments	ECM Cross Ref.
a	Additional Below-Grade Insulation			
b	Additional Wall Insulation			
c	Additional Roof Insulation			
d	Improved Glazing (1)			
e	Eliminate Server Rooms			
f	High Efficiency Chiller (1)			
g	Free Cooling			
h	Heat Recovery			
i	Increased Envelope Inspections			
j	Occupancy/Daylight Sensing			
k	High Efficiency Boiler (1)			
l	High Efficiency HVAC Equipment (1)			
m	Variable Volume Kitchen Hoods			

Note 1: Performance/efficiency better than required by code.

Appendix B

ECM No.	Description	First Cost Estimate	Dollars/Year Savings	Simple Payback	MBTU/Year Savings
1a	Additional 0.75" Polystyrene Wall Insulation	$180,000	$14,000	12.9	
1b	Additional 1" Polystyrene Wall Insulation	$300,000	$16,500	18.2	
1c	Additional 1.5" Polystyrene Wall Insulation	$350,000	$18,400	19.0	

Description:

The base building wall insulation requirement, Per ASHRAE 90.7 2013 =

R = 11.9 hr-ft^2-F/Btu

U value = 0.084 Btu/(hr-ft^2-F)

This ECM would increase the insulation thickness as follows:

Increase 1.25" thick insulation to 2.0" Thick

R = 15.87 hr-ft^2-F/Btu

U value = 0.063 Btu/(hr-ft^2-F)

Increase 1.25" thick insulation to 2.25" Thick

R = 17.2 hr-ft^2-F/Btu

U value = 0.058 Btu/(hr-ft^2-F)

Increase 1.25" thick insulation to 2.75" Thick

R = 19.9 hr-ft^2-F/Btu

U value = 0.050 Btu/(hr-ft^2-F)

Construction Costs:

Appendix C:

ENERGY IMPACT STATEMENT

For all projects with a construction budget over $10 million, complete an Energy Impact Statement as required by the Design Guidelines 2.1, 2.2 and 3.2. Refine and update the Energy Impact Statement throughout the three design phases as more detailed information regarding the project becomes available. For comparison, prior estimates are to be shown on subsequent updates of the Energy Impact Statement.

The following describes the general methodology to be used for each utility section. Provide supporting information with the Energy Impact Statement for each phase where required.

Legend:

ALL:	Requirement for each phase
SD:	Schematic Design Phase
DD:	Design Development Phase
CD:	Construction Document Phase

Electrical:

ALL:	Describe methods and assumptions used to calculate electrical estimates.
SD:	Can use watts per square foot. Identify any unusual loads. Estimates can be a developed using a computer simulation or a spread sheet listing peak demand, estimated diversity and annual consumption.
DD & CD:	Estimates based on actual design and not watts per square foot. Estimates can be a developed using a computer simulation program or a spread sheet listing peak demand, estimated diversity and annual consumption. Indicate diversity assumptions or include schedules from computer simulation.

Low Pressure Steam:

ALL:	Describe methods and assumptions used to calculate low pressure steam estimates. Provide list of significant loads showing peak demand and annual consumption.
SD:	Heating consumption estimate can be developed using ASHRAE Degree Day Formula or Bin Estimate Method.
CD & DD:	Develop heating consumption estimates using a computer simulation program utilizing 8,760 hours per year analysis such as Trane Trace, Carrier HAP or Elite EZDOE.

60 PSI Steam:

ALL:	Describe methods and assumptions used to calculate 60 PSI steam estimates. Provide list of significant loads showing peak demand and annual consumption.

Chilled Water:

ALL:	Describe methods and assumptions used to calculate chilled water estimates. Provide list of significant loads showing peak demand and annual consumption.
CD & DD:	Develop chilled water cooling estimates using a computer simulation program utilizing 8,760 hours per year analysis such as Trane Trace, Carrier HAP or Elite EZDOE.

Domestic Cold Water:

ALL:	Describe methods and assumptions used to calculate domestic cold water estimates. Provide fixture count summary and site source for estimating peak diversified demand.

Domestic Hot Water:

ALL:	Describe methods and assumptions used to calculate domestic hot water estimates. Provide fixture count summary and site source for estimating peak diversified demand.

Natural Gas:

ALL:	Describe methods and assumptions used to calculate natural gas estimates.

Storm Drainage system:

ALL:	Describe methods and assumptions used to calculate storm drainage estimates.

Building Description and Assumptions:

Provide a brief narrative describing various building related items and assumptions used to complete the Energy Impact Statement. Among these are the following:

a. Building Gross Floor Area
b. Building Hours of Operation (breakdown for various key areas as required)
c. Utilities Required
d. Mechanical Systems Description
e. Chilled Water Design Entering and Leaving Temperatures
f. Assumed Design Residual Pressure for the Domestic Cold Water System
g. Electrical System Description

ENERGY IMPACT STATEMENT
BLANK FORM

Project Name: _____ U of M Project No.: _____

Building Energy Summary:	**Schematic Phase**	**Design Development Phase**	**Construction Document Phase**
Project Affected Gross Area, (GSF)			
Annual Building Energy Consumption All Energy Input Converted to BTU, (MBTU/year)			
Annual Building Energy Consumption per GSF, (BTU/year/GSF)			

Electrical:

Maximum Demand, (kW)			
Annual Consumption, (kWH/year):			
Lighting	*Not Required*		
Miscellaneous Power	*Not Required*		
HVAC Equipment	*Not Required*		

Low Pressure Steam:

Peak Load, (lbs/hr):			
Summer			
Winter			
Annual Consumption, (MLB/yr):			
Heating	*Not Required*		
Humidification	*Not Required*		
Air Conditioning	*Not Required*		
Domestic Water Heating	*Not Required*		
Process	*Not Required*		

60 PSI Steam:

Peak Load, (lbs/hr):			
Summer			

Winter			
Annual Consumption, (MLB/yr)			

Project Name: _____ U of M Project No.: _____

Chilled Water:	**Schematic Phase**	**Design Development Phase**	**Construction Document Phase**
Peak Load, (tons/hour):			
Summer			
Winter			
Annual Consumption, (ton-hours/year)			

Domestic Cold Water:

Peak Cold Water Demand, (GPM)			
Peak Sanitary Demand, (GPM)			
Annual Consumption, (million gallons/year):			
Sanitary Sewer	*Not Required*		
Cooling Tower Evaporation	*Not Required*		
Cooling Tower Blowdown	*Not Required*		

Domestic Hot Water:

Peak Demand, (GPM)			
Annual Consumption, (million gallons/year)			

Natural Gas:

Peak Demand, (CCF/hour)			
Annual Consumption, (CCF/year)			

Storm Drainage system:

Design Storm Peak Volume, (GPM)			

ENERGY IMPACT STATEMENT
SAMPLE

Building Description and Assumptions:

General:

- Central Campus building with mix of offices and classrooms. Some small labs.

Building Gross Floor Area:

- 40,000 GSF (4 Stories @ 10,000 GSF each)

Building Hours of Operation (breakdown for various key areas as required):

- 7 a.m. – 6 p.m. and as further defined in the attached calculations and computer simulation input schedules.

Utilities Required:

- Low pressure steam from Central Power Plant.
- High pressure steam from Central Power Plant.
- Domestic hot water from Central Power Plant.
- Domestic cold water from City of Ann Arbor.
- Natural gas from MichCon.
- Electricity from Central Campus sub-station.

Mechanical Systems Description:

- Single low pressure steam absorption water chiller.
- Roof mounted cooling tower.
- Two air handling units located in the basement mechanical room.
- VAV boxes with hot water reheat coils.
- Hot water perimeter heating via steam/hot water heat exchanger.
- Gas fired unit heaters at Loading Dock.
- High pressure steam for autoclaves.
- 44 F Entering Chilled Water Temperature, 56 F Leaving Chilled Water Temperature.
- Assumed design residual pressure for the Domestic Cold Water System is 30 psi.

Electrical System Description

- Electrical feed will come from Central Campus feeder 21-2.
- No emergency generator is required.

Building Energy Summary:	**Schematic Phase**	**Design Development Phase**	**Construction Document Phase**
Project Affected Gross Area, (GSF)	40,000 *(See Exhibit A, 1.1)*	40,000 *(See Exhibit B, 1.1)*	40,000 *(See Exhibit C)*
Annual Building Energy Consumption All Energy Input Converted to BTU, (MBTU/year)	14,518 *(See Exhibit A, 1.2)*	12,781 *(See Exhibit B, 1.2)*	12,781 *(See Exhibit C)*
Annual Building Energy Consumption per GSF, (BTU/year/GSF)	363,000 *(See Exhibit A, 1.3)*	319,500 *(See Exhibit B, 1.3)*	319,500 *(See Exhibit C)*

Electrical:

Maximum Demand, (kW)	480 *(See Exhibit A, 2.1)*	474 *(See Exhibit B, 2.1)*	474 *(See Exhibit C)*
Annual Consumption, (kWH/year):	800,000 *(See Exhibit A, 2.2)*	786,545 *(See Exhibit B, 2.2)*	786,545 *(See Exhibit C)*
Lighting	*Not Required*	346,080 *(See Exhibit B, 2.3)*	346,080 *(See Exhibit C)*
Miscellaneous Power	*Not Required*	212,367 *(See Exhibit B, 2.4)*	212,367 *(See Exhibit C)*
HVAC Equipment	*Not Required*	228,098 *(See Exhibit B, 2.5)*	228,098 *(See Exhibit C)*

Low Pressure Steam:

Peak Load, (lbs/hr):			
Summer	6,400 *(See Exhibit A,3.1)*	6,080 *(See Exhibit B, 3.1)*	6,080 *(See Exhibit C)*
Winter	1,552 *(See Exhibit A, 3.2)*	1,403 *(See Exhibit B, 3.2)*	1,403 *(See Exhibit C)*
Annual Consumption, (MLB/yr):	9,743 *(See Exhibit A, 3.3)*	8,404 *(See Exhibit B, 3.3)*	8,404 *(See Exhibit C)*
Heating	*Not Required*	2,436 *(See Exhibit B, 3.4)*	2,436 *(See Exhibit C)*
Humidification	*Not Required*	9 *(See Exhibit B, 3.5)*	9 *(See Exhibit C)*
Air Conditioning	*Not Required*	5,957 *(See Exhibit B, 3.6)*	5,957 *(See Exhibit C)*
Domestic Water Heating	*Not Required*	2 *(See Exhibit B, 3.7)*	2 *(See Exhibit C)*
Process	*Not Required*	0 *(See Exhibit B, 3.8)*	0 *(See Exhibit C)*

60 PSI Steam:

Peak Load, (lbs/hr):			
Summer	400 *(See Exhibit A, 4.1)*	250 *(See Exhibit B, 4.1)*	250 *(See Exhibit C)*

Winter	400 *(See Exhibit A, 4.2)*	250 *(See Exhibit B, 4.2)*	250 *(See Exhibit C)*
Annual Consumption, (MLB/yr)	200 *(See Exhibit A, 4.3)*	125 *(See Exhibit B, 4.3)*	125 *(See Exhibit C)*

Chilled Water:	**Schematic Phase**	**Design Development Phase**	**Construction Document Phase**
Peak Load, (tons/hour):			
Summer	320 *(See Exhibit A, 5.1)*	304 *(See Exhibit B, 5.1)*	304 *(See Exhibit C)*
Winter	100 *(See Exhibit A, 5.2)*	82 *(See Exhibit B, 5.2)*	82 *(See Exhibit C)*
Annual Consumption, (ton-hours/year)	320,000 *(See Exhibit A, 5.3)*	297,856 *(See Exhibit B, 5.3)*	297,856 *(See Exhibit C)*

Domestic Cold Water:			
Peak Cold Water Demand, (GPM)	200 *(See Exhibit A, 6.1)*	200 *(See Exhibit B, 6.1)*	200 *(See Exhibit C)*
Peak Sanitary Demand, (GPM)	231 *(See Exhibit A, 6.2)*	231 *(See Exhibit B, 6.2)*	231 *(See Exhibit C)*
Annual Consumption, (million gallons/year):	9.53 *(See Exhibit A, 6.4)*	9.53 *(See Exhibit B, 6.3)*	9.53 *(See Exhibit C)*
Sanitary Sewer	*Not Required*	11.53 *(See Exhibit B, 6.4)*	11.53 *(See Exhibit C)*
Cooling Tower Evaporation	*Not Required*	2.04 *(See Exhibit B, 6.5)*	2.04 *(See Exhibit C)*
Cooling Tower Blowdown	*Not Required*	0.37 *(See Exhibit B, 6.6)*	0.37 *(See Exhibit C)*

Domestic Hot Water:			
Peak Demand, (GPM)	75 *(See Exhibit A, 7.1)*	75 *(See Exhibit B, 7.1)*	75 *(See Exhibit C)*
Annual Consumption, (million gallons/year)	3.01 *(See Exhibit A, 7.2)*	3.01 *(See Exhibit B, 7.2)*	3.01 *(See Exhibit C)*

Natural Gas:			
Peak Demand, (CCF/hour)	5 *(See Exhibit A, 8.1)*	4 *(See Exhibit B, 8.1)*	4 *(See Exhibit C)*
Annual Consumption, (CCF/year)	2,500 *(See Exhibit A, 8.2)*	2,000 *(See Exhibit B, 8.2)*	2,000 *(See Exhibit C)*

Storm Drainage system:			
Design Storm Peak Volume, (GPM)	286 *(See Exhibit A, 9.1)*	302 *(See Exhibit B, 9.1)*	302 *(See Exhibit C)*

ENERGY IMPACT STATEMENT
SAMPLE EXHIBIT A - SCHEMATIC DESIGN PHASE CALCULATIONS

In accordance with the Design Phase Deliverables; at the Schematic Design Phase, complete the following items which contribute to the development of the Energy Impact Statement:

- ***Reviewed energy code requirements.***
- ***Typical building elevations with window placement .***
- ***Roof layout.***
- ***Typical floor plans with identified area uses and resulting area square footage.***
- ***Identified all needed HVAC systems with one-line flow diagrams.***
- ***Conceptual plumbing and piping layout.***
- ***Electric one-line diagrams based on conceptual electric requirements.***

Item No.	Building Energy Summary	Descriptions & Calculations
1.1	Project Affected Gross Area, (GSF)	40,000 Sq. Ft. per Schematic Design Phase Space Programming.
1.2	Annual Building Energy Consumption, (MBTU/year)	All Energy Input Converted to MBTU/year Electric = 2,730.4 MBTU/year [See Item 2.2] Low Pressure Steam = 11,301.0 MBTU/year [See Item 3.3] 60 PSI Steam = 236.4 MBTU/year [See Item 4.3] Natural Gas = 250.0 MBTU/year [See Item 8.2] Total All Sources = 14,519 MBTU/year
1.3	Annual Building Energy Consumption per Sq. Ft., (BTU/year/GSF)	14,519 MBTU/year / 40,000 SF = 363,000 Btu/year/SF

Item No.	Electrical	Descriptions & Calculations
2.1	Maximum Demand, (kW)	Assume: Lighting @ 2 Watts/SF Misc. Electric @ 5 Watts/SF HVAC @ 5 Watts/SF Results in 480 kW Peak Summer Load
2.2	Annual Consumption, (MWH/year)	Assume Annual consumption @ 20 kWH/year per SF. 20 kWH/year per SF X 40,000 SF = 800,000 kWH/year.
2.3	Lighting	*Breakout value not required for this item in Schematic Phase.*
2.4	Miscellaneous Power	*Breakout value not required for this item in Schematic Phase.*
2.5	HVAC Equipment	*Breakout value not required for this item in Schematic Phase.*

Item No.	Low Pressure Steam	Descriptions & Calculations
3.1	Summer Peak Load, (lbs/hr)	Cooling load assumed to be 125 SF/ton @ 40,000 SF = 320 tons/hr. Steam consumption for absorption chillers is approximately 20 lb/hr at 9 psi. Therefore, 320 tons X 20 lbs/hr = 6,400 lbs/hr.
3.2	Winter Peak Load, (lbs/hr)	Heating load assumed to be 45 Btu/SF X 40,000 SF Gross Floor Area /1160 BTU per lb @ 9 psi = 1,552 lbs/hr.
3.3	Annual Consumption, (MLB/yr)	Cooling Consumption = 320,000 ton-hours/year [see Chilled Water, Item 4.3] X 20 lb-hour / 1000 lbs per MLB = 6,400 MLB/year. Heating Consumption = Using Heating Degree Day Method: (((1,552 lbs/hr peak load / (-10 ºF - 72 ºF)) X 6,258 Heating Degree Days [from ASHRAE 1984 Fundamentals, pg 24.25] X 24) / 1000 lbs per MLB = 2,843 MLB/year. Humidification + Domestic Water Re-Heating + Miscellaneous Steam Loads is assumed to be 500 MLB/year. Total Annual Consumption = Cooling + Heating + Miscellaneous = 6,400 + 2843 + 500 = 9,743 MLB/year.
3.4	Heating	*Breakout value not required for this item in Schematic Phase.*
3.5	Humidification	*Breakout value not required for this item in Schematic Phase.*
3.6	Air Conditioning	*Breakout value not required for this item in Schematic Phase.*
3.7	Domestic Water Heating	*Breakout value not required for this item in Schematic Phase.*
3.8	Process	*Breakout value not required for this item in Schematic Phase.*

Item No.	60 PSI Steam	Descriptions & Calculations
4.1	Summer Peak Load, (lbs/hr)	Four Autoclaves: Assume 4 X 100 lbs/hour of 60 PSI steam required = 400 lbs/hour.
4.2	Winter Peak Load, (lbs/hr)	Same as Summer Peak Load = 400 lb/hr.
4.3	Annual Consumption, (MLB/yr)	Four Autoclaves: Assume 4 X 100 lbs/hour of 60 PSI steam required / 1000 lbs/hour per MLB/hr X 2 cycles/day X 250 days/yr = 200 MLB/year

Item No.	Chilled Water	Descriptions & Calculations
5.1	Summer Peak Load, (tons/hour)	Cooling load assumed to be 125 SF/ton @ 40,000 SF = 320 tons/hr.
5.2	Winter Peak Load, (tons/hour)	Assume winter peak load for computer server rooms and miscellaneous year-round cooling needs at 100 tons.
5.3	Annual Consumption, (ton-hours/year)	Using Equivalent Full Load Hours Method: 320 tons peak load X 1000 hours equivalent full load operation [from ASHRAE 1984 Fundamentals, pg 28.5] = 320,000 ton-hours/year. Using Cooling Degree Day Method: (320 tons peak load/92 ^{o}F - 72 ^{o}F) X 687Cooling Degree Days [from ASHRAE 1984 Fundamentals, pg 28.6] X 24 = 219,840 ton-hours/year. Conclusion: Use 320,000 ton-hours/year. Note: winter cooling load is handled by winterized cooling towers via free cooling system.

Item No.	Domestic Cold Water	Descriptions & Calculations
6.1	Peak Demand, (GPM)	Based on a review of the International Building Code, 2000 and International Plumbing Code, 2000 to determine maximum building occupancy levels and resulting minimum number of plumbing facilities, as well as a review of similar building types on campus, it was determined that the domestic cold water peak demand be based on 750 fixture units. From Table E102 of the International Plumbing Code, 2000, the resulting domestic cold water peak demand is 177 GPM. Additionally the cooling tower has an estimated peak domestic cold water demand of 23 GPM [Calculated using "Marley Cooling Tower Fundamentals"]. Total DCW Peak Demand = 177 + 23 = 200 GPM.
6.2	Peak Sanitary Demand, (GPM)	Peak Sanitary Demand = Domestic Cold Water Demand [Item 5.1] + Domestic Hot Water Demand [Item 6.1] – Cooling Tower Make-up [Item 5.1] = 177 + 77 – 23 = 231 GPM.
6.3	Annual Consumption, (gallons/year):	Occupied DCW: 177 GPM X 25% Diversity X 2,000 hours/year = 5.31 million gallons/year. Unoccupied DCW: 177 GPM X 2.5% Diversity X 6,760 hours/year = 1.80 million gallons/year. Cooling Tower Make-up: 23 GPM X 20% Diversity X 8,760 hours/year = 2.42 million gallons/year. Total = 5.31 + 1.80 + 2.42 = 9.53 million gallons/year.
6.4	Sanitary Sewer	*Breakout value not required for this item in Schematic Phase.*
6.5	Cooling Tower Evaporation + Drift	*Breakout value not required for this item in Schematic Phase.*
6.6	Cooling Tower Blowdown	*Breakout value not required for this item in Schematic Phase.*

Item No.	Domestic Hot Water	Descriptions & Calculations
7.1	Peak Demand, (GPM)	Based on a review of the International Building Code, 2000 and International Plumbing Code, 2000 to determine maximum building occupancy levels and resulting minimum number of plumbing facilities, as well as a review of similar building types on campus, it was determined that the domestic hot water peak demand be based on 250 fixture units. From Table E102 of the International Plumbing Code, 2000, the resulting domestic hot water peak demand is 75 GPM.
7.2	Annual Consumption, (million gallons/year):	Occupied: 75 GPM X 25% Diversity X 2,000 hours/year = 2.25 million gallons/year. Unoccupied: 75 GPM X 2.5% Diversity X 6,760 hours/year = 0.76 million gallons/year. Total = 2.25 + 0.76 = 3.01 million gallons/year.

Item No.	Natural Gas	Descriptions & Calculations
8.1	Peak Demand, (CCF/hour)	Two Gas Fired Unit Heaters in Loading Dock: Assume 2 X 250,000 BTU/hr = 500,000 BTU/hr / 100,000 BTU/CCF = 5 CCF/hour.
8.2	Annual Consumption, (CCF/year):	Two Gas Fired Unit Heaters in Loading Dock: Assume 2 X 250,000 BTU/hr X 2000 hours/year operation x 25% diversity / 100,000 BTU/CCF = 2,500 CCF/year.

Item No.	Storm Drainage System	Descriptions & Calculations
9.1	Design Peak Storm Volume, (GPM)	From 2000 International Plumbing Code, Section 1106: Assume roof area of 10,000 sf @ 2.75 inches/hr (100 year rainfall) = 286 GPM.

ENERGY IMPACT STATEMENT
SAMPLE EXHIBIT B - DESIGN DEVELOPMENT PHASE CALCULATIONS

In accordance with the Design Phase Deliverables; at the Design Development Phase, complete the following items (in addition to those completed during the Schematic Design Phase) which contribute to the further refinement of the Energy Impact Statement:

- ***All building elevations with window placement and wall sections .***
- ***Roof and drainage plan.***
- ***All floor plans with identified area uses and resulting area square footage.***
- ***Design criteria for each mechanical system.***
- ***Equipment schedules for major mechanical items.***
- ***Overall building airflow diagram.***
- ***Conceptual control diagrams for all mechanical and plumbing systems.***
- ***Preliminary calculations for HVAC systems.***
- ***Design criteria for each plumbing system, including set points, etc.***
- ***One-line diagrams for all plumbing systems.***
- ***Plumbing and piping plans.***
- ***Typical lighting plans.***
- ***Lighting fixture schedule.***
- ***Review of lighting energy code requirements.***
- ***Normal power riser diagram.***
- ***Power panel schedules.***
- ***Electric load estimates.***

Item No.	Building Energy Summary	Descriptions & Calculations
1.1	Project Affected Gross Area, (GSF)	40,000 GSF per Design Development Phase Space Programming.
1.2	Annual Building Energy Consumption, (MBTU/year)	All Energy Input Converted to MBTU/year Electric = 2,684 MBTU/year [See Item 2.2] Low Pressure Steam = 9,749 MBTU/year [See Item 3.3] 60 PSI Steam = 148 MBTU/year [See Item 4.3] Natural Gas = 200 MBTU/year [See Item 8.2] Total All Sources = 12,781 MBTU/year
1.3	Annual Building Energy Consumption per GSF, (BTU/year/GSF)	12,781 MBTU/year / 40,000 GSF = 319,522 kBtu/year/GSF

Item No.	Electrical	Descriptions & Calculations
2.1	Maximum Demand, (kW)	Data from Design Development Phase lighting and power panel schedules was input into a computer simulation program. See Table B.1, "Billing Details – Electric" for maximum electric demand. The maximum electric demand of 474 kW occurs in June.
2.2	Annual Consumption, (MWH/year)	Data from Design Development Phase lighting and power panel schedules was input into a computer simulation program. See Table B.1, "Billing Details – Electric" for annual electric consumption. The annual electric consumption for all components is 786,545 kWH.
2.3	Lighting	For electrical consumption by component, see Table B.2, "Energy Budget by System Component". This table shows electrical energy as kBTUs. The estimated annual electrical consumption for lighting is listed under "Site Energy" as 1,181,170 kBTU per year. This converts to 346,080 kWH per year.
2.4	Miscellaneous Power	For electrical consumption by component, see Table B.2, "Energy Budget by System Component". This table shows electrical energy as kBTUs. The estimated annual electrical consumption for miscellaneous power is listed under "Site Energy" as 724,809. This converts to 212,367 kWH per year.
2.5	HVAC Equipment	For electrical consumption by component, see Table B.2, "Energy Budget by System Component". This table shows electrical energy as kBTUs. The estimated annual electrical consumption for HVAC is listed under "Site Energy" as the sum of the air system fans, pumps and cooling towers, or 536,896 + 53,690 + 187,913 = 778,499. This sum converts to 228,098 kWH per year.

Item No.	Low Pressure Steam	Descriptions & Calculations
3.1	Summer Peak Load, (lbs/hr)	Data from Design Development Phase was input into a computer simulation program to determine the estimated summer peak steam demand. See Table B.3, "Hourly Simulation – Summer Chiller Plant" for details. The peak summer steam demand includes steam for the absorption chiller. The peak summer steam demand of 6,080 lbs/hr occurs at 4:00 pm on July 22.
3.2	Winter Peak Load, (lbs/hr)	Data from Design Development Phase was input into a computer simulation program to determine the estimated winter peak steam demand. See Table B.5, "Hourly Simulation – Heating Plant" for details. The peak winter steam demand includes all heating loads plus humidification loads. The peak winter steam demand of 1,628 MBH or 1,403 lbs/hr occurs at 7:00 am on January 15.
3.3	Annual Consumption, (MLB/yr)	Total Annual Consumption = Heating [Item 3.4] + Humidification [Item 3.5] + Air Conditioning [Item 3.6] + Domestic Water Reheating [Item 3.7] = 2,436 + 8.94 + 5,957 +2 = 8,404 MLB/year.
3.4	Heating	For steam consumption by component, see Table B.2, "Energy Budget by System Component". This table shows steam energy as kBTUs. The estimated annual steam consumption for heating is listed under "Site Energy" as 2,825,760. This converts to 2,436 MLB per year.
3.5	Humidification	For steam consumption by component, see Table B.2, "Energy Budget by System Component". This table shows steam energy as kBTUs. The estimated annual steam consumption for humidification is listed under "Site Energy" as 107,228. This converts to 8.94 MLB per year.
3.6	Air Conditioning	For steam consumption by component, see Table B.2, "Energy Budget by System Component". This table shows steam energy as kBTUs. The estimated annual steam consumption for air conditioning (steam absorption) is listed under "Site Energy" as 6,910,259. This converts to 5,957 MLB per year.
3.7	Domestic Water Heating	Domestic hot water is supplied from the Central Power Plant. Supplemental reheating of the domestic hot water is done with Plant steam to maintain the discharge water temperature set point. The annual consumption is estimated at 2 MLB per year.
3.8	Process	None required for this building

Item No.	60 PSI Steam	Descriptions & Calculations
4.1	Summer Peak Load, (lbs/hr)	During the Design Development Phase two autoclaves were eliminated. From the equipment schedules, the two remaining autoclaves require 125 lbs/hour. 2 X 125 lbs/hour of 60 PSI steam required = 250 lbs/hour.
4.2	Winter Peak Load, (lbs/hr)	Same as Summer Peak Load = 250 lbs/hr.
4.3	Annual Consumption, (MLB/yr)	Assume 2 X 125 lbs/hour of 60 PSI steam required / 1000 lbs/hour per MLB/hr X 2 cycles/day X 250 days/yr = 125 MLB/year

Item No.	Chilled Water	Descriptions & Calculations
5.1	Summer Peak Load, (tons/hour)	Data from Design Development Phase was input into a computer simulation program to determine the estimated peak chilled water demand. See Table B.3, "Hourly Simulation – Summer Chiller Plant " for details. The peak summer chilled water demand of 3,648 MBH or 304 tons occurs at 4:00 pm on July 22.
5.2	Winter Peak Load, (tons/hour)	Data from Design Development Phase was input into a computer simulation program to determine the estimated peak chilled water demand. See Table B.4, "Hourly Simulation – Winter Chiller Plant" for details. Winter free cooling operation (absorption chillers off) is assumed to occur between October and April. The peak winter chilled water demand of 984 MBH or 82 tons occurs at 2:00 pm on April 28.
5.3	Annual Consumption, (ton-hours/year)	Data from Design Development Phase was input into a computer simulation program to determine the annual chilled water consumption. See Table B.2, "Energy Budget by System Component" for details. The estimated annual chilled water consumption is listed under "Site Energy" as 3,574,272 kBTU. This converts to 297,856 ton-hours per year. Note: winter cooling load is handled by winterized cooling towers via free cooling system.

Item No.	Domestic Cold Water	Descriptions & Calculations
6.1	Peak Demand, (GPM)	Based on a review of the International Building Code, 2000 and International Plumbing Code, 2000 to determine maximum building occupancy levels and resulting minimum number of plumbing facilities, as well as a review of similar building types on campus, it was determined that the domestic cold water peak demand be based on 750 fixture units. From Table E102 of the International Plumbing Code, 2000, the resulting domestic cold water peak demand is 177 GPM. Additionally the cooling tower has an estimated peak domestic cold water demand of 23 GPM [Calculated using "Marley Cooling Tower Fundamentals"]. Total DCW Peak Demand = 177 + 23 = 200 GPM.
6.2	Peak Sanitary Demand, (GPM)	Peak Sanitary Demand = Domestic Cold Water Demand [Item 5.1] + Domestic Hot Water Demand [Item 6.1] – Cooling Tower Make-up [Item 5.1] = 177 + 77 – 23 = 231 GPM.
6.3	Annual Consumption, (million gallons/year):	Occupied DCW: 177 GPM X 25% Diversity X 2,000 hours/year = 5.31 million gallons/year. Unoccupied DCW: 177 GPM X 2.5% Diversity X 6,760 hours/year = 1.80 million gallons/year. Cooling Tower Make-up: 23 GPM X 20% Diversity X 8,760 hours/year = 2.42 million gallons/year. Total = 5.31 + 1.80 + 2.42 = 9.53 million gallons/year.
6.4	Annual Sanitary Sewer, (million gallons/year)	Annual sanitary sewer volume is estimated as: The sum of the annual domestic cold water (DCW) consumption + annual domestic hot water (DHW) consumption + annual cooling tower blowdown. Occupied DCW = 5.31 million gallons/year. [Item 6.3] Unoccupied DCW = 1.80 million gallons/year. [Item 6.3] Occupied DHW = 2.25 million gallons/year. [Item 7.2] Unoccupied DHW = 0.76 million gallons/year. [Item 7.2] Cooling Tower Blowdown = 0.37 million gallons/year. [Item 6.6] Total = 5.31 + 1.80 + 2.25 + 1.80 + 0.37 = 11.53 million gallons/year.
6.5	Cooling Tower Evaporation + Drift, (million gallons/year):	Peak cooling tower evaporation is calculated using "Marley Cooling Tower Fundamentals" as: E=R/10/100 X Circulation Water Volume Where: E=Evaporation, GPM R=Tower temperature range. In this case 100 F – 85 F = 15 F. Circulation water volume is 4 GPM per ton of absorption chilling or 4 GPM X 320 Tons = 1,280 gallons of circulating water. E=15/10/100 X 1,280 = 18.1 GPM Peak cooling tower drift is calculated as: D=0.1% X Circulation Water Volume D=0.1% X 1,280 = 1.3 GPM

		Annual cooling tower evaporation + drift is estimated as: (18.1 GPM + 1.3 GPM) X 20% Diversity X 8,760 hours/year = 2.04 million gallons/year. Note: This water volume is not included in the sanitary sewer calculation as it does not go to the sanitary sewer.
6.7	Cooling Tower Blowdown, (million gallons/year):	Peak cooling tower blowdown is calculated using "Marley Cooling Tower Fundamentals" as: B=(((R/10) / (CC-1)) – 0.1) /100) X Circulating Water Volume Where: B=Blowdown, GPM R=Tower temperature range. In this case 100 F – 85 F = 15 F. CC=Concentration cycles. In this case 5 cycles is assumed. Circulation water volume is 4 GPM per ton of absorption chilling or 4 GPM X 320 Tons = 1,280 gallons of circulating water. B=((15/10) / (5-1)/100) X 1,280 = 3.5 GPM Annual cooling tower blowdown is estimated as: 3.5 GPM X 20% Diversity X 8,760 hours/year = 0.37 million gallons/year. Note: This water volume is included in the sanitary sewer calculation as it does go to the sanitary sewer.

Item No.	Domestic Hot Water	Descriptions & Calculations
7.1	Peak Demand, (GPM)	Based on a review of the International Building Code, 2000 and International Plumbing Code, 2000 to determine maximum building occupancy levels and resulting minimum number of plumbing facilities, as well as a review of similar building types on campus, it was determined that the domestic hot water peak demand be based on 250 fixture units. From Table E102 of the International Plumbing Code, 2000, the resulting domestic hot water peak demand is 75 GPM.
7.2	Annual Consumption, (million gallons/year):	Occupied: 75 GPM X 25% Diversity X 2,000 hours/year = 2.25 million gallons/year. Unoccupied: 75 GPM X 2.5% Diversity X 6,760 hours/year = 0.76 million gallons/year. Total = 2.25 + 0.76 = 3.01 million gallons/year.

Item No.	Natural Gas	Descriptions & Calculations
8.1	Peak Demand, (CCF/hour)	Two Gas Fired Unit Heaters in Loading Dock: From the Design Development Phase mechanical equipment schedules, the two gas fired unit heaters were downsized two at 200,000 BTU/hr each. 2 X 200,000 BTU/hr = 400,000 BTU/hr / 100,000 BTU/CCF = 4 CCF/hour.
8.2	Annual Consumption, (CCF/year):	Two Gas Fired Unit Heaters in Loading Dock: Assume 2 X 200,000 BTU/hr X 2000 hours/year operation x 25% diversity / 100,000 BTU/CCF = 2,000 CCF/year.

Item No.	Storm Drainage System	Descriptions & Calculations
9.1	Design Peak Storm Volume, (GPM)	Roof area from Design Development Phase Roof Plan is 10,560 SF. From 2000 International Plumbing Code, Section 1106: 10,560 SF @ 2.75 inches/hr (100 year rainfall) = 302 GPM.

ENERGY IMPACT STATEMENT
SAMPLE EXHIBIT C - CONSTRUCTION DOCUMENT PHASE CALCULATIONS

In accordance with the Design Phase Deliverables; at the Construction Document Phase, complete the following items (in addition to those completed during the Design Development Phase) which contribute to the further refinement of the Energy Impact Statement:

- ***Complete specification.***
- ***One-line diagrams for all mechanical systems.***
- ***Duct layout and air flow volumes for each space.***
- ***Detailed control drawings with sequences of operation.***
- ***All design calculations.***
- ***Lighting plans for all areas.***
- ***Electrical power load summary.***
- ***Electrical panel schedules.***

Because the majority of the information needed for accurate estimates in the Energy Impact Statement is available in the Design Development Phase, most projects will require very little modification of the Energy Impact Statement in moving to the Construction Document Phase. Also, there is no change in the methodology used to determine estimates in moving from the Design Development Phase to the Construction Document Phase.

For these reasons, it is assumed that (for this example) there is no change in the Energy Impact Statement. Estimates shown in the Design Development Phase column of the Energy Impact Statement are repeated in the Construction Document Phase column.

It is not unusual for projects to change significantly in moving from Design Development Phase to Construction Document Phase (usually due to budget constraints). In these cases there may be significant changes to the Energy Impact Statement which the Design Professional will be expected to document.

DESIGN GUIDELINE 3.3
SUSTAINABLE PRODUCTS PORTFOLIO

Scope

The Sustainable Products Portfolio (SPP) is maintained by the Sustainability Team at the University of Michigan (U-M) Department of Architecture, Engineering & Construction (AEC). The SPP consists of a list of sustainable products that the University has evaluated and which have been found to meet our sustainable selection criteria. The SPP is a resource that project teams are encouraged to use to select sustainable products. The SPP is not an all inclusive list of available sustainable products and technologies. It is not intended to limit competition or replace creative sustainable design solutions. Sustainable products not on the SPP shall be submitted to the AEC Sustainability Team for review.

Related Sections

3.1 Sustainable Design and LEED® Requirements

Sustainability Criteria

The criteria used to determine if a product is listed in the SPP include but are not limited to the following:
• Simple to install and easy to maintain
• Long term durability
• Simple to operate
• Reliable
• Aesthetically pleasing
• Competitively priced
• Proven track record
• Replacement parts readily available and fairly priced
• Good local service
• Sustainable manufacturing process
• Sustainability claims can be validated
• Made from Renewable and/or Recycled Materials
• Locally Harvested/Extracted/Manufactured
• Low VOC content

The weight given to each selection criteria will vary from product to product as appropriate for that particular product. The SPP is updated on an ongoing basis and is meant to provide a menu of sustainable products the A/E can select from in confidence knowing such products will ultimately meet U-M's sustainability goals. Additionally, products found not to meet university requirements, for example found unreliable after a "real world" installation period, will be removed from the SPP.

SPP Additions and Changes

Anyone requesting that a product be added to or changed on the SPP must use the Request for Addition or Change to the SPP Listing form available on the AEC website. The extent of evaluation will vary based on the product; therefore, time to evaluate requests will vary.

If an A/E desires to use a sustainable product not found on the SPP, provide information to the U-M Design Manager, who shall consult with the U-M Sustainability Team for a recommendation. A/Es should provide the information requested on the Request for Addition or Change to the SPP Listing form.

SPP Listing Categories

Products are listed in the SPP in one of three categories:

1. Approved Product (AP): Product has been evaluated and is approved for use on U-M projects
2. Conditional Product (CP):
    a. Product has been used on select U-M projects; however, post-occupancy evaluation has not been completed. UM Design Manager shall seek approval from the Sustainability Team for the intended use of the product.
    OR
    b. Product has not been used on U-M projects yet; however, a preliminary evaluation of the product indicated that the product meets the UM sustainability criteria if it performs as anticipated. UM Design Manager shall seek approval from the Sustainability Team for the intended use of the product.
3. Not Recommended (NR):
    a. Product has been used on U-M project(s) and did not perform to the required sustainability criteria. The Sustainability Team does not recommend this product.
    OR
    b. Product has not been used on U-M project(s); however results from an evaluation of the product completed by the Sustainability Team deemed that the product did not perform to the required sustainability criteria. The Sustainability Team does not recommend this product.

DESIGN GUIDELINE 3.4
RECYCLING MATERIALS

Introduction

This section addresses recycling and other diversion methods for materials that may be encountered in construction or demolition projects. This document provides guidance for identifying materials which are recyclable or otherwise able to be diverted and available methods for proper disposal.

Related Sections

U-M Design Guidelines:
3.1 Sustainable Design and LEED® Requirements

U-M Master Specifications:
7.0 MS028110 – Regulated Construction Waste Remediation
7.0 MS028213 – Asbestos Remediation
7.0 MS028214 – Asbestos Remediation – Floor Tile and Mastic
7.0 MS028215 – Asbestos Remediation – Roofing Material
7.0 MS028300 – Lead Remediation
7.0 MS028333 – Lead Remediation – Renovation, Repair and Painting in Child-Occupied Facilities and Target Housing
7.0 MS028400 – PCB Remediation

Demolition Requirements

All Projects

Efficient construction and demolition waste management is encouraged on all construction, renovation and demolition projects. Coordinate and review materals with the U-M Design Manager and the U-M Project Manager to identify adequate on-site facilities for separating and storing materials to be recycled and salvaged.

Definitions

Construction and Demolition Debris: Building and site improvement materials resulting from construction or demolition operations.

Disposal: Removal off-site of demolition and construction debris and subsequent sale, recycling, reuse, or deposit in a permitted solid waste landfill.

Hazardous Waste: Waste which contains asbestos, lead-based paint or oil and other corrosive or toxic materials.

Recycle: Diversion of demolition or construction debris from the landfill for reuse.

Salvage: Recovery of demolition or construction debris and subsequent sale or reuse in another facility.

Onsite Reuse: Recovery of demolition or construction debris and subsequent incorporation into the Work.

Potentially Hazardous: Materials which are painted, stained, glazed, treated, odorous or contaminated from a chemical spill.

Primary Constituents of Construction and Demolition Debris with Potential for Recycling

Asphalt Pavement:

Asphalt can be recycled and can be transported to an asphalt-recycling facility.

Asphalt Shingles:

Asphalt shingles can be recycled in Michigan so long as they do not contain asbestos. Contractor and the project client shall determine if recycling is cost effective. Currently the nearest receiving facilities are in Lansing, Flint and Southfield.

Carpet:

Carpet and carpet padding may be recycled without restriction. Adhesives and tack strips need to be removed upon removal.

Ceiling Tile:

Major ceiling tile manufacturers offer no-cost pickup and recycling of many types of clean, unpainted, uncontaminated tile. Foil backed tile cannot currently be recycled in this area. To be recycled, tile must be tested for asbestos and must be located in an area where there is no above-ceiling asbestos. On-site requirements include a location for storing palletized and shrink-wrapped tile for pickup by the manufacturer. Specific requirements can be obtained by contacting the two manufactures that offer the service in this area; Armstrong and USG.

Concrete:

Clean (i.e. unpainted, uncoated, uncontaminated) concrete may be recycled or reused. Reuse options to be reviewed and coordinated with U-M Design Manager. Concrete that is painted, glazed, stained, treated, odorous or otherwise contaminated from a chemical spill must be tested by OSEH to determine disposal and recycling options.

Flooring:

Flooring may be recycled provided it is not painted, stained or contaminated from a chemical spill. Tile which is glazed/fired must be tested by OSEH.

Gypsum Board:

Clean gypsum can be diverted to recycling and reuse outlets by performing the following actions:

- Deposit clean gypsum scrap into source separated containers and protect from weather.
- Remove edge trim and sort with other materials.
- Remove and dispose of fasteners or other contaminants.

Materials which may be contaminated (i.e. painted, stained, or otherwise treated) shall be tested by OSEH. If paint has been treated and found to contain lead, the material must be further tested using Toxicity Characteristic Leaching Procedure (TCLP) to determine if it is a hazardous waste. Any attempt to clean or separate contaminated from uncontaminated material must be done with OSEH approval.

Masonry:

Masonry including, brick, block, and stone are recyclable provided they are not contaminated (i.e. painted, sealed, glazed). Materials which may be contaminated shall be tested by OSEH to determine appropriate disposal or recycling options.

Metals:

Metals including rebar, pipe, copper, aluminum, steel, lead and other metals may be recycled provided they are not hazardous. Materials which are painted, coated, or contaminated must be tested by OSEH prior to attempts to clean or separate contaminated from uncontaminated material. Clean materials may be reused on-site or taken off-site to recycle or to a donation center. Review and coordinate the reuse of materials with U-M Design Manger and verify whether MDEQ permits are required for proposed material reuse.

Packaging Material:

Boxboard, corrugated cardboard, and mixed paper may be recycled without restriction. When possible, require suppliers to remove pallets from Project site.

Plaster:

Plaster is recyclable when free of asbestos or lead paint. Old plaster is essentially concrete material and can be recycled as such. Lime plaster is also recyclable in most communities.

Wood:

Unpainted, untreated, and unstained wood, including scrap wood and untreated wood sawdust can be recycled, or can be used on site with OSEH approval. Materials which may be contaminated (i.e. painted, stained, or otherwise treated) shall be tested by OSEH. Any attempt to clean or separate contaminated from uncontaminated material must be done with OSEH approval.

Yard Waste:

Site-clearing wastes such as brush, branches and trees may be chipped on site. Contact Grounds Services to determine if resulting mulch is able to be composted on U-M property.

Vinyl Siding:

Clean vinyl siding may be recycled without restriction. If siding has been painted or otherwise treated, it must be tested by OSEH. Any attempt to clean or separate contaminated from uncontaminated material must be done with OSEH approval.

Other:

Other potentially recyclable materials commonly resulting from construction and demolition projects include glass, plastic, paper, rubber, textiles and appliances. Assuming asbestos and PCB's have been removed or are otherwise not present, these materials are recyclable if not potentially hazardous due to any chemical treatment or spills. If there is reason to believe these materials may be contaminated, OSEH should be contacted.

Flowchart for Recycling and Disposal of Building Construction & Demolition Debris

The attached Flowchart for Recycling and Disposal of Building Construction & Demolition Debris distinguishes what demolition and construction waste materials can be recycled offsite, reused onsite or sent to a type I landfill.

Flowchart for Recycling and Disposal of Building Construction & Demolition Debris
METALS (Rebar, pipe, aluminum, steel, lead, and sheet metal, etc.)
Will material be recycled?
Yes
To Offsite Recycle
No
Vinyl Siding
WOOD (Pallets, Scraps, Tree stumps/ limbs)
GYPSUM BOARD (Drywall)
OTHER (Glass, Plastic, Paper, Ceiling tiles, Rubber, Textiles, Appliances,etc.)
Is the material potentially hazardous? (Painted, glazed, stained, treated, odorous, or contaminated from chemical spills, etc.) Assumes asbestos & PCB's have been removed.
YES (Recycling is not an option if the material is potentially hazardous.)
Any attempt to clean or separate contaminated from uncontaminated material (i.e painted from unpainted material) must be done with OSEH approval.
NO
OSEH will test the material. (TCLP or other waste characterization, as needed)
To Offsite Recycle or Donation Center
Onsite reuse (OSEH approval is required)
To Type II (Solid Waste) or Type III (Construction Debris) landfill
Is the material hazardous?
YES
Dispose of Material in a Type I (Hazardous Waste) landfill
NO
Material is considered nonhazardous, contaminated
Concrete
MASONRY (Brick, Block, Stone, Tile, Porcelain, etc.)
ASPHALT SHINGLES
To Offsite Recycle
ASPHALT PAVEMENT
To Offsite Recycle
Packaging
To Offsite Recycle
Is the material potentially hazardous? (Painted, glazed, stained, treated, odorous, or contaminated from chemical spills, etc.) Assumes asbestos & PCB's have been removed.
YES
OSEH will test the material to determine disposal/ recycle options.
Hazardous -To Type I landfill
Non Hazardous Contaminated- To Type II (solid waste) or Type III (construction debris) landfill
Inert- To Offsite Recycle
NO
To Offsite Recycle

Sustainability Facts

Building Name / Project Name

Builidng Use	xxxx
Location	Ann Arbor, Michigan
Size	xx,xxx Square Feet
Number of Occupants	xxx

LEED version		v2009
LEED certification level		Silver
ASHRAE 90.1 version		2007
Energy cost savings compared to ASHRAE baseline		xx%
Total energy savings		$xx,xxx / year
Total electrical savings		xx,xxx KWh / year
Total gas savings		xx,xxx Therms / year
CO2 emissions avoided		xx,xxx tons
Water fixture baseline		2012 Michigan Plumbing Code
Total water savings		xx%
On-site renewable energy generation (if applicable)		xx%
Construction/Demolition waste diverted from landfill		xx%
Insulation (R-Value)*	Code	Project
Wall assembly - above grade	xx	xx
Wall assembly - below grade	xx	xx
Roof assembly	xx	xx
Glazing - Curtain wall system		
U-value**	xx	xx
Solar Heat Gain Coefficient (SHGC)**	xx	xx
Glazing - Fixed assembly		
U-value**	xx	xx
Solar Heat Gain Coefficient (SHGC)**	xx	xx
Glazing - Visible Light Transmittance (VT)***		xx

Project Team	
Owner	University of Michigan - School of Social Work
Architect	xx
Engineer	xx
Contractor	xx
Commissioning Authority	xx
Project Management	U-M AEC

Design Period: 01/2015 - 01/2016

Construction Period: 01/2014 - 01/2015

* The higher the R-value the better the insulating quality

** The lower the U-value and SHGC the more energy efficient the window

*** The higher the VT value the more daylight in the space. VT is measured between 0 and 1

planet blue
UNIVERSITY OF MICHIGAN

Place
Architect Logo Here

Place
Additional Logo Here

FACILITIES & OPERATIONS
ARCHITECTURE, ENGINEERING AND CONSTRUCTION
UNIVERSITY OF MICHIGAN

1000XXX
U-M Building Number

Project Name

P0000XXXX
U-M Project Number

Project Name

Project Image

Include a project photo or rendering.

Project Description

Regents project description from AECtion will be used here.

Energy Efficiency Measures

(Insert text description of energy goal/focus)

- (And list energy measures in bullet form)

Other Sustainability Features

- (List in bullet form)

Comprehensive Transportation Management
University of Michigan

The University of Michigan has many commuter programs available for **<Insert project name>** occupants as well as faculty, staff and students in all U-M facilities. These programs manage vehicle parking and provide alternatives to individual transportation needs. Enticing more employees and students to use alternative transportation to commute to and around U-M and its surrounding area reduces drive-alone commuting and vehicle trips while supporting the University's commitment to sustainability. Transportation priorities at U-M currently include:

- Pedestrians
- Bus Services
- Bicycle Safety and Services
- Vanpools and Carpools
- Zip Car
- Permit Parking for Private Vehicles

Pedestrians
Walking in and around the U-M campus is enjoyable and safe. Walking is made enjoyable by the well-kept sidewalks, pedestrian cross walks and signage and natural and architectural features. Also, U-M's proximity to downtown Ann Arbor offers a diverse mix of restaurants, shopping and culture all within walking distance.

To keep pedestrians safe and encourage alternative forms of transportation, there are a variety of free taxi services and a free van service for students, faculty and staff. The taxi services provide reliable transportation to those who work late or need a ride in the event of an emergency. The reassurance of reliable transportation encourages walking to and around campus and therefore reduces the total number of trips of single occupancy vehicles.

Bus Services
Campus bus service is provided 360 days a year, with roughly 60 buses on routes that connect the four main Ann Arbor campuses, as well as the East Ann Arbor Health Center. Campus bus services have surpassed the 7 million ride mark and over 7,200,000 passengers are projected to ride U-M buses (includes fixed route and charter services) during FY2012 (estimates used for the last week of May and June based on FY2011).

Through the MRide contract with the Ann Arbor Transportation Authority (AATA), the University provides fare-free rides on all AATA bus routes for U-M faculty, staff and students. 2.39 million rides were taken via MRide in FY2011. As of the current date (through May 2012), FY2012 MRide ridership is projected at approximately 2.56 million, a 7.3% increase from FY2011 and 41% of total fixed route AATA passengers (6.24 million). MRide is estimated to reach 2.9 million rides in 2013 based on current trends.

ExpressRide offers commuter express bus service from Chelsea or Canton to U-M/ Ann Arbor operated by AATA. U-M continues to help AATA promote complimentary ten-ride tickets to boost use of the service and continues to subsidize both monthly and ten-ride passes (50% discount for U-M employees). An average of 31% of the Chelsea riders are U-M staff; an average of 65% of the Canton riders are U-M staff.

Related Projects/Programs

- U-M acquired 15 additional hybrid-electric sedans and 4 hybrid-electric buses in FY2012 as replacements to the existing campus fleet, further reducing petroleum-based fuel consumption. At the close of FY2012, over 64% of the U-M campus fleet is alternative fueled vehicles. Of 509 vehicles in the automotive class, 89% run on alternative fuel sources (54 Hybrid and 401 Ethanol). Of 504 vehicles in the truck class, 34% are alternative fuel vehicles (124 Ethanol; 15 Electric; and, 33 Biodiesel). In the bus class, all 58 vehicles are alternative fuel vehicles (4 Hybrid and 54 Biodiesel). As technology evolves, the capital bus replacement plan at U-M intends to transition the bus fleet to more fuel efficient and cost effective models in the future.
- A central campus transit facility was built along North University on Central Campus in 2010. The hub is shared by U-M bus service, AATA and incorporated transit, bicycle and pedestrian related improvements.
- Bus Operations Transition Plan: In 2010, a consultant was retained to develop a transportation technology overview that looked at high-capacity transit technologies to better connect the U-M campuses. In 2011, follow up work began on a transition operation plan for the U-M bus system, which included refinement of the bus route system to better serve campus growth (including North Campus Research Complex expansion) and address construction projects on the Medical Campus. In Spring of 2011, enhanced U-M bus service to Medical Campus and the university community was implemented. The changes to U-M bus service included earlier start times, increased frequency and more convenient service from commuter lots. In Fall 2011 the two new routes were fully implemented and helped achieve better utilization of the bus system and improved campus connections. U-M bus service was further enhanced in 2012 with additional North/Central (inbound and outbound) trips at peak times.
- Direct Marketing and Outreach: In 2011, a direct marketing plan and outreach efforts were implemented to better serve constituent groups on campus. With respect to U-M Health System, strategies have included providing express bus service between parking areas and Medical Campus during peak staffing periods, re-tasking existing parking areas on campus and direct marketing of transportation options (alternatives to single-occupancy vehicles) through focus groups and targeted emails (based on residence locations) to U-M Health System employees.

Bicycle Safety and Services

Bike lanes exist on many streets on the U-M campus and in the surrounding Ann Arbor area. Also, many of the roads on and around campus are low volume with low speed limits where bicycles are able to share the road easily with motorists.

Bicycle parking is made easy on and around campus through many convenient options including bicycle racks, lockers and covered parking. There are over 8,000 bike parking spaces on campus. Bicycles also work with other alternative transportation options such as the AATA's buses which have bike racks on them.

In March of 2012, U-M was one of only 35 campuses nationwide to receive the designation of a Bicycle Friendly University (BFU) by the League of American Bicyclists in recognition of its programs and commitment to bicycling on campus. The selection criteria consider a campus bike program's engineering, education, encouragement, enforcement, evaluation and planning.

Related Projects/Programs

- U-M has focused on expanding the campus bike network, including laneage and sharrow additions on roads within University control and contributing to the planning, design and financing of several additions to City roadways. Examples include the Palmer bikeway and bike lanes along Ann Street and North University. The Thompson Street Parking Structure Addition, constructed in 2010, includes an enclosed/secure bicycle parking facility with 50 spaces and an air compressor onsite. In addition to this facility, in recent years U-M has provided new and expanded parking areas on campus, including: Central Campus Transit Center (featuring extensive bike parking and bike travel lanes) and the North Quad Residential and Academic Complex (Central Campus) featuring covered parking. A campus-wide Bike Townhall Meeting was held in January of 2012, preceding the BFU announcement—the successful event announced progress on campus bike programs and obtained input from the campus community. Significant progress toward initiating campus bike rental and bike sharing programs was also made in 2012.
- "Blue Bikes" Rental Program, will commence on campus in early Fall 2012, featuring bicycles for shorter-term and semester-long rental at the North Campus Recreation Building (NCRB) and Outdoor Adventures Space (Elbel Field).
- Bike Sharing Project: In 2011, U-M began working collaboratively with the City of Ann Arbor, Ann Arbor Transportation Authority, Downtown Development Authority and Clean Energy Coalition to bring a modern bike sharing system to the campus and City of Ann Arbor. A pilot program is expected in 2013, featuring approximately 70 bicycles and ten stations in year one.
- The University of Michigan Outdoor Adventures program partners with Common Cycle, a community-based organization founded by U-M students, to offer bike maintenance clinics on a weekly basis (schedule varies by term). At these workshops, participants learn general bike maintenance including but not limited to brake adjustments, chain maintenance, tire truing, and cable adjustments. They also allow opportunity to share knowledge with others and learn while working on a bicycle. The same group also offers workshops within the community and at events on campus.
- There are a number of showers/locker facilities available to the campus community. Students are able to shower/use locker room facilities free of charge in three campus recreation buildings located on the Ann Arbor campus. Staff/faculty are eligible to purchase membership at rates reduced from typical gym memberships. Several academic buildings have showers/locker facilities available to faculty/staff/students through pincode access. There are also a number of buildings with showers/lockers available to building employees and/or students. Examples include Wolverine Tower, Art & Architecture, Fletcher Administration, Office of Campus Sustainability and DPS.
- In 2011, Planet Blue Student Innovation Grant Funding was awarded for a project involving installation of a bike fix-it stand and two public air pumps on campus. This project is currently in the planning process with locations under review.

- Each campus project goes through design review which ensures adequate and proper placement of new bicycle parking facilities for any new construction or renovation project. The City of Ann Arbor adopted a Complete Streets Policy (March 2011). The Complete Streets Policy objective is to construct streets that accommodate a full range of users from pedestrians, to bicyclists, to public transit, and private vehicles. U-M adheres to this policy for all City streets on or adjacent to campus property. All City and University streets are managed and maintained regularly providing safe traveling.
- City of Ann Arbor Non-Motorized Plan: U-M has been a robust leader in establishing Ann Arbor as a first-class bicycling city. As a positive civic and community partner, U-M has worked closely with civic and community groups to establish a comprehensive bike system, programs and services. U-M advised, planned and helped finance the City's 2007 non-motorized plan, which has led to the remarkable expansion of cycling and pedestrian amenities within Ann Arbor over the last few years. U-M is currently working with project partners on an update to the 2007 plan.

Ridesharing

Vanpools and Carpools

Vanpools provide transportation for up to six passengers and a driver. The vanpool participants meet each day in their community and ride together, are dropped off near work, and then the van is parked in a reserved parking place on campus. Joining and/or forming a vanpool is easy through the U-M site on GreenRide (http://umich.greenride.com) and by accessing the U-M vanpool welcome guide at: http://pts.umich.edu/alternative_transportation/welcome_guide.pdf. Vanpooling is sponsored by U-M and is available at low cost and can be deducted from payroll pre-tax. Dozens of communities surrounding U-M campuses are served by vanpools and U-M currently has 98 vanpools serving 600 university staff.

Carpool planning is enabled through the following website: http://zimride.pts.umich.edu/. Also, registering a carpool with U-M will allow riders to share a parking permit and thus reduce personal transportation costs. U-M has 20 registered carpools serving approximately 50 university staff.

Zipcar and Zimride

Zipcars are located around campus for use 24 hours a day, 7 days a week. U-M students, faculty and staff can become a zipcar member at a discounted rate.

Zipcar membership has grown 32 percent since 2010; now at 3,332 U-M members, with Zipcar fleet utilization averaging approximately 52%, which is above optimal. The Zipcar fleet is now at 21 vehicles in a total of 8 locations on campus.

Zimride partners with Zipcar as another ride-matching option, but with a social network application for well-informed (and safer) ride-sharing and to allow members of Zipcar to use a Zipcar reservation on Zimride as one of the options for sharing a ride. U-M Zimride has had 4,209 cumulative ride postings: 75% for one-time rides; 25% for regular commutes.

Permit Parking for Private Vehicles

Personal vehicles are typically not necessary for students and to assist in managing student vehicle parking, student parking permits are available only to junior, senior and graduate students that are registered for classes while freshman and sophomore students are eligible for Student Storage parking permits only.

Parking availability is limited on campus; therefore, U-M has established eligibility criteria for faculty, staff and students and each eligible person is limited to the purchase of one parking option.

Additional information on U-M programs that manage vehicle parking on campus, alternative methods of transportation available to individuals, and a demonstration of quantifiable deduction in personal automobile use through incentive programs is located on the following website: http://pts.umich.edu/. U-M is dedicated to maintaining safe, efficient and innovative transportation options which minimize single occupancy vehicle use and enhances the overall quality of life on campus and in the surrounding areas.

Other Projects/Outreach Supporting Commute Options—*In addition to the projects noted above, these are some projects the University has been involved in related to the promotion of commute options. Please note that this list is not comprehensive of all projects the University has been involved —*

- Integrated Assessment: U-M is deeply committed to sustainability and creating a healthy footprint as outlined by the ambitious goals of Mary Sue Coleman, University President. Unlike many peer institutions, U-M has taken an in-depth look at its practices through a comprehensive process of Integrated Assessments (IA). The IA for Transportation calls for a 25% reduction in greenhouse gas emissions campus-wide by 2025. The IA provides a basis for future directions at the University—strategies enhancing commute options, including cycling-related recommendations play a prominent role. U-M is truly committed to advancing the goals and recommendations of the IA, with cycling efforts already underway. (http://www.graham.umich.edu/ia/campus.php)
- STARS: U-M scored a Silver rating in its first year participating in the Sustainability Tracking, Assessment & Rating System, STARS (https://stars.aashe.org/). U-M is among 92 schools internationally to receive a Silver rating. Participating with 189 other institutions, the university's rating is based on data from all areas of the Ann Arbor campus, including the U-M Health System. Alternative Transportation was a component of this rating.
- Electric Vehicle Charging Station Project: This project is currently underway. U-M acquired DOE grant funding for the installation of Level II electric vehicle charging stations on campus. The project anticipates installation at four campus sites, servicing eight spaces. Installation will likely occur between Summer 2012-January 2013.
- U-M frequently conducts and is involved in transportation/traffic/pedestrian improvement studies to enhance operations at key intersections, corridors or as parts of larger projects. Recent examples include: Medical Center Traffic Study, CCTC Traffic Study, SC10 Lot Improvement Project along Kipke Drive.

- Ann Arbor Connector Feasibility Study: The Ann Arbor Connector Feasibility Study was a joint project of the University of Michigan, the Ann Arbor Transportation Authority (AATA), City of Ann Arbor and the Ann Arbor Downtown Development Authority initiated in 2010. Its mission was to determine the feasibility of a high-capacity transit line connecting major trip generators in Ann Arbor. High capacity modes, including modern streetcar, light rail, bus rapid transit, monorail and a variety of other possibilities were examined. The first phase of the study concluded in November 2010 and determined the modes with the highest potential to meet the University and City's short and longer term needs, along with their associated estimated costs and estimated ridership. This project was renewed in 2012 and the project's Alternatives Analysis will commence this year.
- AATA Countywide Master Plan: From early 2010 to summer of 2011, the AATA Act 55 Board and staff developed a 30-year vision, with input from community members and over 70 public meetings that called for improving transit options within Ann Arbor and Ypsilanti, creating connections with nearby communities, and investing in 21st century transportation technologies. In FY2012, the AATA released a 5-year program and U-M has been working closely with AATA on service changes and expansion that impact the campus community. With support from PTS in 2012, AATA introduced new AirRide shuttle service (http://myairride.com/) between Ann Arbor and Detroit Metropolitan Airport.

LEED 2009 ENHANCED REFRIGERANT MANAGEMENT

EA CREDIT 4

Project:

Life Assumptions Based On: ASHRAE Applications Handbook

Date: By:

Inputs										Calculations					
Unit Tag	Qty. of	Q_u	Refrigerant	GWPr	ODPr	Rc	Life (Yr.s)	Leak Rate	Decom. Leakage	Total	Total Leakage	LCGWP	LCODP x	LCGWP +	LCGWP +
(optional)	Units	tons/unit	Type			(lb.s refrig.		Lr	Mr	tons	Tr		10^5	LCODP x 10^5	LCODP x 10^5
	N					per ton)		(%)	(%)	for type	(%)				x N x Q_u
	1	1					1	2	10	1	12	0.0	0.0	0.0	0
							1	2	10	0	12	0.0	0.0	0.0	0
							1	2	10	0	12	0.0	0.0	0.0	0
							1	2	10	0	12	0.0	0.0	0.0	0
							1	2	10	0	12	0.0	0.0	0.0	0
							1	2	10	0	12	0.0	0.0	0.0	0
							1	2	10	0	12	0.0	0.0	0.0	0
							1	2	10	0	12	0.0	0.0	0.0	0
							1	2	10	0	12	0.0	0.0	0.0	0
							1	2	10	0	12	0.0	0.0	0.0	0
							1	2	10	0	12	0.0	0.0	0.0	0
							1	2	10	0	12	0.0	0.0	0.0	0
									Qtotal:	1				Subtotal:	0

(Total tons of refrigeration for project)

Average refrigerant atmospheric impact: 0.0

If the average refrigerant atmospheric impact is greater than 100, the project does not qualify for the credit.

GWPr: Look up in table on Sheet 2.

ODPr: Look up in table on Sheet 2.

Rc: Obtain from submittal or mfr. for specific equipment used.

Life (Yr.s): Use most recent edition of ASHRAE Applications Handbook to obtain. Input the handbook edition (year) into the heading above. DO NOT LEAVE AS 1 YEAR!

Leak Rate: 2% is the required default per LEED unless documentation proves otherwise. Low pressure chlr.s (R123) often can be shown to have lower leak rates, for these insert lower rate and provide documentation to LEED.

Decom. Leakage: Decommission leak rate. 10% is the required LEED default, but can try to convince LEED project's leak rate will be lower due to proper recovery program (probably difficult).

Other Terms: See 2009 LEED Reference Guide for details.

Notes: Equipment with 0.5 lb.s or less refrigerant charge (e.g. water coolers) does not need to be included per LEED.

Portable cooling equipment (such as standard refrigerators) and temporary cooling equipment may be excluded per LEED.

District Energy Systems: equipment at district plant must be included along with refrigerant containing equipment installed by the project.

Ozone Depletion and Global Warming Potentials of Refrigera

Refrigerant	GWP	ODP	
Chlorofluorocarbons			
CFC-11	4,680	1.0	Cer
CFC-12	10,720	1.0	Ref
CFC-114	9,800	0.94	Cer
CFC-500	7,900	0.605	Cer
CFC-502	4,600	0.221	Low
Hydrochlorofluorocarbons			
HCFC-22	1,780	0.04	Air-
HCFC-123	76	0.02	CFC
Hydrofluorocarbons			
HFC-23	12,240	~0	Ultr
HFC-134a	1,320	~0	CFC
HFC-245fa	1,020	~0	Insu
HFC-404A	3,900	~0	Low
HFC-407C	1,700	~0	HCF
HFC-410A	1,890	~0	Air-
HFC-507A	3,900	~0	Low
Natural refrigerants			
Carbon Dioxide (CO2)	1.0	0	
Ammonia (NH3)	0	0	
Propane	3	0	

Source: LEED Reference Guide for Green Building Design and Construction 2009 Edition

ants (100-Year Values)

Common Building Applications
ntrifugal chillers
rigerators, chillers
ntrifugal chillers
ntrifugal chillers, de-humidifiers
v-temperature refrigeration
-conditioning, chillers
C-11 replacement- chillers, etc.
ra-low-temperature refrigeration
C-12 or HCFC-22 replacement
ulation agent, centrifugal chillers
v-temperature refrigeration
FC-22 replacement
-conditioning
v-temperature refrigeration

16	**Sustainab**
Y	SSp1
1	SSc1
5	SSc2
6	SSc4.1
1	SSc4.2
2	SSc4.4
1	SSc6.2
4	**Water Ef**
Y	WEp1
2	WEc1
2	WEc3
17	**Energy a**
Y	EQp1
Y	EAp2
Y	EAp3
10	EAc1
2	EAc3
2	EAc4
3	EAc5
3	**Materials**
Y	MRp1
1	MRc2
1	MRc4
1	MRc5
7	**Indoor E**
Y	IEQp1
Y	IEQp2
1	IEQc1
1	IEQc3.1
1	IEQc4.1
1	IEQc4.2
1	IEQc4.3
1	IEQc7.1
1	IEQc7.2
1	**Innovatio**
1	IDc2
3	**Regional**
1	IDc1.1
1	IDc1.2
1	IDc1.3
51	**Total**

Certified

ble Sites
Construction Activity Pollution Prevention
Site Selection
Development Density & Community Connectivity
Alternative Transportation - Public Transportation Access
Alternative Transportation - Bike Storage and Changing Rooms
Alternative Transportation - Parking Capacity
Stormwater Design - Quality Control
fficiency
Water Use Reduction
Water Efficient Landscaping - Reduce by 50%
Water Use Reduction - Reduce by 30%
nd Atmosphere
Fundamental Commissioning of Building Systems
Minimum Energy Performance
Fundamental Refrigerant Management
Optimize Energy Performance - Improve by 30% for New Buildings or 26% for Existing Building Renovations
Enhance Commissioning
Enhance Refrigerant Management
Measurement and Verification
s and Resources
Storage & Collection of Recyclables
Construction Waste Management - 50% Recycled or Salvaged
Recycled Content - 10% of Content
Regional Materials - 10% of Materials
nvironmental Quality
Minimum Indoor Air Quality Performance
Environmental Tobacco Smoke (ETS) Control
Outdoor Air Delivery Monitoring
Construction Indoor Air Quality Management Plan - During Construction
Low-Emitting Materials - Adhesives & Sealants
Low-Emitting Materials - Paints & Coatings
Low-Emitting Materials - Flooring Systems
Thermal Comfort - Design
Thermal Comfort - Verification
on and Design Process
LEED Accredited Professional
Priority Credits
Regional Priority: SSc4.1 Alternative Transportation - Public Transportation Access
Regional Priority: SS4.2 Alternative Transportation - Bike Storage and Changing Rooms
Regional Priority: SSc6.2 Stormwater Design - Quality Control

40 to 49 points Silver 50 to 59 points Gold 60 to 79 points Platinum 80 to 110 points

LEED 2009 for New Construction and Major Renovation

Project Checklist

Project Name:

Date:

This checklist indicates which LEED credits are typically achievable on University of Michigan projects. Revise to make project specific.

Column Heading Key:

- Y: Likely achievable for 90%+ of campus projects.
- N: Likely not achievable for campus projects.
- ?: Credit could be achieved but is too project specific to assume percentage of achievement.

Y	N	?	Credit	Credit Title	Point Range	Comments
16	**1**	**9**	**Sustainable Sites***	**Points Possible: 26**		
Y			SSp1	Construction Activity Pollution Prevention		See DG Technical Sections 013639, 310000, and 312500.
1			SSc1	Site Selection	1	Undeveloped areas near wetlands and within floodplains may have issues achieving this credit.
5			SSc2	Development Density & Community Connectivity	5	Central campus and many areas of north campus should be able to achieve this credit.
		1	SSc3	Brownfield Redevelopment	1	Contaminated sites should investigate this credit through the standard compliance path or an alternate compliance approach if the standard path is not applicable.
6			SSc4.1	Alternative Transportation - Public Transportation Access	6	Potential relocation of bus stop for compliance, however, careful planning will be required so that moving a stop location(s) does not increase distance from an existing LEED certified building.
1			SSc4.2	Alternative Transportation - Bike Storage and Changing Rooms	1	Showers located within 200 yards of projects can be counted towards this credit.
		3	SSc4.3	Alternative Transportation - Low-Emitting and Fuel-Efficient Vehicles	3	B&F buildings may be able achieve this credit by providing fleet vehicles & fueling stations for FTE occupants, providing discounted parking rates for fuel-efficient vehicles, or alternative compliance approach in lieu of standard path.
2			SSc4.4	Alternative Transportation - Parking Capacity	2	Projects that don't provide new parking or increase the number of existing parking spaces will achieve this credit.
		1	SSc5.1	Site Development - Protect or Restore Habitat	1	Achievement could potentially be obtained by setting aside and restoring open space on U-M property to remain undeveloped for the life of the project.
		1	SSc5.2	Site Development - Maximize Open Space	1	Achievement could potentially be obtained by setting aside open space on U-M property to remain undeveloped for the life of the project.
		1	SSc6.1	Stormwater Design - Quantity Control	1	Quantity of stormwater runoff is typically addressed through a larger SWM campus plan. However, projects will have to demonstrate achievement of this credit based on the individual project boundary.
1			SSc6.2	Stormwater Design - Quality Control	1	For projects over 1 acre there should be no additional cost (see site requirements in DG Technical Section 312500 and the OSEH Storm Water Management Program Plan).
		1	SSc7.1	Heat Island Effect - Non-roof	1	Projects can achieve this four ways: Under-cover parking, shading hardscape, provide high SRI concrete, and open-grid pervious paving; compliance can be in combination. Site DGs currently under construction will address the latter three.
		1	SSc7.2	Heat Island Effect - Roof	1	Other than white EPDM, low-slope high-albedo roofs are not generally recommended. Energy modeling should be considered to determine potential savings for white (high-albedo) vs. black roofs; using high-albedo roofs does not guarantee energy savings. Some metal and vegetated roofs also comply.
	1		SSc8	Light Pollution Reduction	2	If cut-off retrofit fixture is accepted, this credit may be achievable. Also, remote, stand-alone campus properties may also be able to comply more easily.
4	**0**	**6**	**Water Efficiency**	**Points Possible: 10**		
Y			WEp1	Water Use Reduction		See U-M DG 3.2.
2		**2**	WEc1	Water Efficient Landscaping	2 to 4	See DG Technical Section 328400. Revisions to the DG for additional requirements are currently under construction.
			X	Reduce by 50%	2	
				No Potable Water Use or Irrigation	4	
		2	WEc2	Innovative Wastewater Technologies	2	Typically only achievable if rain/grey water is used for waterclosets or by installing composting waterclosets and waterless urinals.
2		**2**	WEc3	Water Use Reduction	2 to 4	See U-M DG 3.2.
			X	Reduce by 30%	2	
				Reduce by 35%	3	
				Reduce by 40%	4	

LEED 2009 for New Construction and Major Renovation

Project Checklist

Project Name:

Date:

This checklist indicates which LEED credits are typically achievable on University of Michigan projects. Revise to make project specific.

Column Heading Key:

- Y: Likely achievable for 90%+ of campus projects.
- N: Likely not achievable for campus projects.
- ?: Credit could be achieved but is too project specific to assume percentage of achievement.

Y	N	?	Credit	Credit Title	Point Range	Comments
16	**9**	**10**	**Energy and Atmosphere**	**Points Possible: 35**		
Y			EQp1	Fundamental Commissioning of Building Systems		See U-M DG 4.3.
Y			EAp2	Minimum Energy Performance		See U-M DG 3.2.
Y			EAp3	Fundamental Refrigerant Management		
10		**9**	EAc1	Optimize Energy Performance		See U-M DG 3.2. U-M DG 3.2 requires projects over $10M to achieve 30% improvement.
			X	Improve by 12% for New Buildings or 8% for Existing Building Renovations	1	
			X	Improve by 14% for New Buildings or 10% for Existing Building Renovations	2	
			X	Improve by 16% for New Buildings or 12% for Existing Building Renovations	3	
			X	Improve by 18% for New Buildings or 14% for Existing Building Renovations	4	
			X	Improve by 20% for New Buildings or 16% for Existing Building Renovations	5	
			X	Improve by 22% for New Buildings or 18% for Existing Building Renovations	6	
			X	Improve by 24% for New Buildings or 20% for Existing Building Renovations	7	
			X	Improve by 26% for New Buildings or 22% for Existing Building Renovations	8	
			X	Improve by 28% for New Buildings or 24% for Existing Building Renovations	9	
			X	Improve by 30% for New Buildings or 26% for Existing Building Renovations	10	
				Improve by 32% for New Buildings or 28% for Existing Building Renovations	11	
				Improve by 34% for New Buildings or 30% for Existing Building Renovations	12	
				Improve by 36% for New Buildings or 32% for Existing Building Renovations	13	
				Improve by 38% for New Buildings or 34% for Existing Building Renovations	14	
				Improve by 40% for New Buildings or 36% for Existing Building Renovations	15	
				Improve by 42% for New Buildings or 38% for Existing Building Renovations	16	
				Improve by 44% for New Buildings or 40% for Existing Building Renovations	17	
				Improve by 46% for New Buildings or 42% for Existing Building Renovations	18	
				Improve by 48%+ for New Buildings or 44%+ for Existing Building Renovations	19	
	7		EAc2	On-Site Renewable Energy	1 to 7	
				1% Renewable Energy	1	
				3% Renewable Energy	2	
				5% Renewable Energy	3	
				7% Renewable Energy	4	
				9% Renewable Energy	5	
				11% Renewable Energy	6	
				13% Renewable Energy	7	
2			EAc3	Enhanced Commissioning	2	U-M will do enhanced Cx on all LEED projects, updates to U-M DG 4.3 are currently under construction.
2			EAc4	Enhanced Refrigerant Management	2	See U-M DG 3.1 for U-M Refrigerant Calculation Table.
	2	**1**	EAc5	Measurement and Verification	3	Option 3 allows 1 credit when using the USGBC preferred method for energy and water usage data tracking. Projects with metering may achieve 1 point.
2			EAc6	Green Power	2	U-M purchases windpower RECs on a monthly basis. These RECs may be allocated to a project for credit.

LEED 2009 for New Construction and Major Renovation

Project Checklist

Project Name:

Date:

This checklist indicates which LEED credits are typically achievable on University of Michigan projects. Revise to make project specific.

Column Heading Key:

Y: Likely achievable for 90%+ of campus projects.

N: Likely not achievable for campus projects.

?: Credit could be achieved but is too project specific to assume percentage of achievement.

Y	N	?	Credit	Credit Title	Point Range	Comments
3	**6**	**5**	**Materials and Resources**	**Points Possible: 14**		
Y			MRp1	Storage & Collection of Recyclables		See DG Technical Section 310000.
	3		MRc1.1	Building Reuse - Maintain Existing Walls, Floors, and Roof	1 to 3	
				Reuse 55%	1	
				Reuse 75%	2	
				Reuse 95%	3	
	1		MRc1.2	Building Reuse - Maintain 50% of Interior Non-Structural Elements	1	
1		**1**	MRc2	Construction Waste Management	1 to 2	Project shall develop a project specific CWM plan.
			X	50% Recycled or Salvaged	1	
				75% Recycled or Salvaged	2	
	2		MRc3	Material Reuse	1 to 2	
				Reuse 5%	1	
				Reuse 10%	2	
1		**1**	MRc4	Recycled Content	1 to 2	See U-M DG 3.3 Sustainable Products Portfolio (SPP) is currently under construction.
			X	10% of Content	1	
				20% of Content	2	
1		**1**	MRc5	Regional Materials	1 to 2	See U-M DG 3.3 Sustainable Products Portfolio (SPP) is currently under construction.
			X	10% of Materials	1	
				20% of Materials	2	
		1	MRc6	Rapidly Renewable Materials	1	
		1	MRc7	Certified Wood	1	

LEED 2009 for New Construction and Major Renovation

Project Checklist

Project Name:

Date:

This checklist indicates which LEED credits are typically achievable on University of Michigan projects. Revise to make project specific.

Column Heading Key:

- Y: Likely achievable for 90%+ of campus projects.
- N: Likely not achievable for campus projects.
- ?: Credit could be achieved but is too project specific to assume percentage of achievement.

Y	N	?	Credit	Credit Title	Point Range	Comments
7	**0**	**8**	**Indoor Environmental Quality**	**Points Possible: 15**		
Y			IEQp1	Minimum Indoor Air Quality Performance		See DG Technical Section 230000.
Y			IEQp2	Environmental Tobacco Smoke (ETS) Control		Campus policy.
1			IEQc1	Outdoor Air Delivery Monitoring	1	
		1	IEQc2	Increased Ventilation	1	Not typically recommended by U-M due to increased energy consumption/cost.
1			IEQc3.1	Construction Indoor Air Quality Management Plan - During Construction	1	Use AEC IAQ management plan.
		1	IEQc3.2	Construction Indoor Air Quality Management Plan - Before Occupancy	1	If credit is pursued, testing is recommended in lieu of building flush out. Coordinate air-testing with U-M OSEH.
1			IEQc4.1	Low-Emitting Materials - Adhesives & Sealants	1	See DG Technical Section 079200.
1			IEQc4.2	Low-Emitting Materials - Paints & Coatings	1	See DG Technical Section 099100.
1			IEQc4.3	Low-Emitting Materials - Flooring Systems	1	See DG Technical Sections 096229 and 096500.
		1	IEQc4.4	Low-Emitting Materials - Composite Wood & Agrifiber Products	1	
		1	IEQc5	Indoor Chemical & Pollutant Control	1	
		1	IEQc6.1	Controllability of Systems - Lighting	1	
		1	IEQc6.2	Controllability of Systems - Thermal Comfort	1	
1			IEQc7.1	Thermal Comfort - Design	1	See DG Technical Section 230000.
1			IEQc7.2	Thermal Comfort - Verification	1	See U-M DG 3.1. Use AEC survey and corrective action plan.
		1	IEQc8.1	Daylight & Views - Daylight	1	
		1	IEQc8.2	Daylight & Views - Views	1	

LEED 2009 for New Construction and Major Renovation

Project Checklist

Project Name:

Date:

This checklist indicates which LEED credits are typically achievable on University of Michigan projects. Revise to make project specific.

Column Heading Key:

- Y: Likely achievable for 90%+ of campus projects.
- N: Likely not achievable for campus projects.
- ?: Credit could be achieved but is too project specific to assume percentage of achievement.

Y	N	?	Credit	Credit Title	Point Range	Comments
1	**0**	**5**	**Innovation and Design Process**	**Points Possible: 6**		
		1	IDc1.1	Innovation in Design: Specific Title	1	Note: Only 3 of the 6 ID credits can come from Exemplary Performance thresholds.
		1	IDc1.2	Innovation in Design: Specific Title	1	
		1	IDc1.3	Innovation in Design: Specific Title	1	
		1	IDc1.4	Innovation in Design: Specific Title	1	
		1	IDc1.5	Innovation in Design: Specific Title	1	
1			IDc2	LEED Accredited Professional	1	
3	**0**	**1**	**Regional Priority Credits**	**Points Possible: 4**		
-	**-**	**-**	-	Regional Priority: SSc3 Brownfield Redevelopment	-	Note: Only 4 of the 6 Regional Priority credits can be attempted/achieved.
1			RPc1.1	Regional Priority: SSc4.1 Alternative Transportation - Public Transportation Access	1	"Bonus" point, no additional cost.
1			RPc1.2	Regional Priority: SS4.2 Alternative Transportation - Bike Storage and Changing Rooms	1	"Bonus" point, no additional cost.
1			RPc1.3	Regional Priority: SSc6.2 Stormwater Design - Quality Control	1	"Bonus" point, no additional cost.
		1	RPc1.4	Regional Priority: SSc7.2 Heat Island Effect - Roof	1	"Bonus" point, no additional cost.
-	**-**	**-**	-	Regional Priority: MRc1.1 Building Reuse - Maintain Existing Walls, Floors, and Roof 75%	-	Note: Only 4 of the 6 Regional Priority credits can be attempted/achieved.
50	**16**	**44**	**Totals**	**Points Possible: 110**		

Certified 40 to 49 points Silver 50 to 59 points Gold 60 to 79 points Platinum 80 to 110 points

UNIVERSITY OF MICHIGAN
ARCHITECTURE, ENGINEERING AND CONSTRUCTION

LEED® PROJECT REGISTRATION PROCEDURE

This procedure defines the process for LEED project registration for all University of Michigan projects pursuing LEED certification. All items below to be coordinated with the Design Manager.

- LEED Project Administrator to be a member of the University of Michigan Sustainability Team

- Design Manager to notify the LEED Project Administrator when Regental project approval is obtained and provide the following information to the LEED Project Administrator:

    - LEED Project Name: *University of Michigan <Building Name>*
    - Address (Street, City, State, Zip)
    - Anticipated construction start and end date.
    - Gross square footage
    - Project Type (Laboratory, Healthcare, Classroom, Housing, Office, etc)
    - Anticipated certification level
    - Provide the name and contact information of the A/E's designated LEED project manager. This person will be assigned as the LEED Project Manager in LEED Online.

- Tasks to be completed by LEED Project Administrator

    - Register the project in LEED Online.
        - Accept LEED Online version 3 *Terms and Conditions*.
        - Verify LEED Online version 3 *Minimum Program Requirements.*
        - Notify the Business Office to initiate Registration and Certification Payments through University of Michigan - Accounts Payable. The check shall be delivered to Project Administrator for mailing.
        - Assign the A/E's LEED Project Manager in LEED Online.
    - Notify the Design Manager when the project has been registered in LEED Online. The Design Manager shall then notify the A/E's LEED Project Manager.
    - From this point on, the LEED Project Administrator's tasks are complete.

- The LEED Project Manager will be responsible for assigning and managing the attempted credits within LEED Online and fielding administrative questions and review comments throughout the review process.

- At no time should the LEED Project Manager change the confidentiality classification in LEED Online.

Additional Information

LEED projects shall not choose Confidentiality within LEED Online because the information listed in the USGBC Project Directory (Certified & Registered) is limited to the following:

- LEED Project Name
- Registration Date
- LEED Rating System
- Address (Street, City, State, ZIP, Country)
- Owner Organization
- Owner Type
- Project Type
- Certification Level
- Gross Square Footage

(OS1) Green Cleaning System
University of Michigan - <Inset Project Name>

The University of Michigan is implementing a comprehensive cleaning system called (OS1) in U-M campus buildings. Upon construction completion, the (OS1) Green Cleaning System will be adopted by **<Inset Project Name>**. The (OS1) program includes a green cleaning policy, a high performance cleaning system, a custodial effectiveness assessment, the use of sustainable cleaning products and materials, the use of sustainable cleaning equipment, indoor chemical and pollutant source control and indoor integrated pest management. This system was created for U-M by ManageMen Inc. (http://managemen.com/).

Introduction
The (OS1) cleaning system at U-M works to improve the indoor environmental quality (IEQ) of U-M campus buildings. The principals behind this cleaning program are:

- Cleaning for health first and then for appearance
- Disposing of cleaning wastes in an environmentally-responsible manner
- Increasing worker safety and awareness
- Increasing the level of sanitation of building surfaces
- Removing pollutants from the facility responsibly
- Reducing chemical, particle and moisture residue
- Minimizing human exposure to pollutants

Green Cleaning Policy
In order to reduce the exposure of building occupants and maintenance personnel to potentially hazardous chemical, biological and particulate contaminants, which adversely affect air quality, human health, building finishes, building systems and the environment, **<Inset Project Name>** will adopt the (OS1) Cleaning System. Green Cleaning goals of (OS1) are to minimize the negative impact that cleaning services have on the environment and to institute the use of safe, low-impact cleaning chemicals, equipment and practices. U-M will work to continually improve its environmental performance by:

- Cleaning for health first, then for appearance,
- Going beyond compliance on safety regulations,
- Minimizing environmental harm,
- Training custodial staff to work in an environmentally-responsible manner,
- Ensuring that all staff members are aware of their responsibilities in implementing this policy,
- Conserving energy, water and other resources while providing a clean and sanitary environment,
- Complying with all current legislation and industry standards,
- Using cleaning products that are Green Seal, Environmental Choice or EPA's Design for the Environment-approved and low volatile organic compound (VOC) products whenever applicable,
- Using products with high post-consumer recycled content,
- Using equipment with superior filtration systems,
- Eliminating the use of products containing phosphates,
- Eliminating the use of aerosol products,
- Using concentrated products, as available,
- Using chemicals that are accurately diluted using cold water,
- Using products that are packaged with recycled materials and
- Maintaining an effective walk-off mat program.

The performance of the (OS1) system is measured through the use of building auditors from U-M Plant Operations Work Management department who inspect areas cleaned using the (OS1) Green Cleaning System.

Responsibility for ensuring that the green cleaning system of (OS1) is carried out in **<Inset Project Name>** is the team of custodial specialists that will be assigned to that building. (OS1) utilizes a "team cleaning" approach which involves an area being cleaned systematically using a team of specialists, including:

Light duty specialist: Dusting, emptying trash & recycling, spot cleaning
Vacuum specialist: Vacuum carpet and hard floors
Restroom specialist: Clean, sanitize and restock the restroom
Utility specialist: Clean lobby areas, spot clean glass, mop and scrub hard floors, haul trash and recycling to the appropriate dumpsters from central points.

Specialists' duties are tailored to fit the needs of each building. Team member tasks and scheduling are based on the building's size, layout and any special needs.

(OS1) begins with an assessment of the building's cleaning needs. Tasks are divided into "routine tasks" to be done daily, "detail tasks" to be done in a specific area on a specific day of the week and "project work" which includes carpet extraction and floor stripping, focused on one day of the week. Once this assessment is complete, job cards are prepared for each team member. Job cards provide a checklist of specific tasks to be accomplished and an approximate schedule for completing those tasks.

As variability and flexibility must be a part of any housekeeping program, (OS1) is flexible in that it adjusts the work load and schedule for a normal level of absenteeism. If there is an absence of a team member, the (OS1) Absence Staffing Plan adjusts schedules and tasks to ensure that critical housekeeping tasks are covered. Additionally, (OS1) can accommodate unique needs of individual custodians should that situation arise. For example, those with temporary ailments or disabilities can be assigned as light duty specialists, allowing them to continue to function as a part of their team.

As (OS1) has been adopted by U-M campus buildings, this green cleaning system will be used in **<Inset Project Name>**.

Green Cleaning: High Performance Cleaning System

At the core of the (OS1) system is cleaning for health first, then for appearance. It employs in-depth training based on standardized tools and procedures. (OS1) is also a results-based process that includes gathering and tracking tangible data.

Various methods are used in (OS1) to help ensure the prevention of airborne particulate matter and the spread of viruses & bacteria within a facility. Backpack vacuums used in this system are CRI-certified under their "Green Label" program and meet stringent criteria associated with soil removal ability, dust containment and carpet appearance retention. Flat mops are used extensively alongside two-chamber buckets that minimize cross contamination between clean and soiled water, removing 96% of surface debris and bacteria.

<u>Appropriate Staffing Plan</u>

(OS1) utilizes a "team cleaning" approach. An area is cleaned systematically using a team of specialists which includes a:

Light duty specialist: Dusting, emptying trash & recycling, spot cleaning
Vacuum specialist: Vacuum carpet and hard floors
Restroom specialist: Clean, sanitize and restock the restroom
Utility specialist: Clean lobby areas, spot clean glass, mop and scrub hard floors, haul trash and recycling to the appropriate dumpsters from central points.

Specialists' duties are tailored to fit the needs of each building. Team member tasks and scheduling are based on the building's size, layout and any special needs.

(OS1) begins with an assessment of the building's cleaning needs. Tasks are divided into "routine tasks" to be done daily, "detail tasks" to be done in a specific area on a specific day of the week and "project work" which

includes carpet extraction and floor stripping, focused on one day of the week. Once this assessment is complete, job cards are prepared for each team member. Job cards provide a checklist of specific tasks to be accomplished and an approximate schedule for completing those tasks.

As variability and flexibility must be a part of any housekeeping program, (OS1) is flexible in that it adjusts the work load and schedule for a normal level of absenteeism. If there is an absence of a team member, the (OS1) Absence Staffing Plan adjusts schedules and tasks to ensure that critical housekeeping tasks are covered. Additionally, (OS1) can accommodate unique needs of individual custodians should that situation arise. For example, those with temporary ailments or disabilities can be assigned as light duty specialists, allowing them to continue to function as a part of their team.

Staff training

In the (OS1) system, both supervisors and custodians are trained on all aspects of the program. Upper management attends Janitor University (http://managemen.com/education/), a 5-day leadership and professional development course focused on the (OS1) program. New supervisors are also required to attend the U-M Plant Operations' Supervisor Leadership Training program (http://www.plant.bf.umich.edu/director/Academy/pa_programs.php). Administered by U-M's Plant Academy, this year-long program includes training in leadership, customer service, ethics, facilities management, law & policy, diversity and change management. The culmination of this program is an on-the-job practicum project that takes classroom learning and applies it in the real world.

Custodial training consists of a 16-hour Boot Camp that emphasizes the (OS1) philosophy of cleaning:

- Treating custodians as first class citizens
- Cleaning for health first then appearance
- Simplification and economy in the cleaning process
- The "clean syndrome" – a generalized description of the systematic cleaning process
- Beyond compliance policy for safety regulations
- Minimization of environmental impact
- High performance culture of exceeding all expectations

Everyone who works with or is potentially exposed to chemicals receives information and training on the chemicals in their work area at the time of their initial assignment and whenever a new physical or health hazard is introduced to their work area. Training includes classroom instruction, handouts, discussion and hands-on demonstrations. The information and training program address the following:

- The requirements of the OSHA Hazard Communication Standard
- The location, availability and details of the Written Hazard Communication Program
- The location of Material Safety Data Sheets (MSDSs), how to read these to obtain hazard information and how this information can be used
- The color-coding of chemicals and related MSDSs and the safe handling of chemicals provided by using the single portion chemical packets
- Any operations in their work area where chemicals are present
- The physical and health hazards of chemicals in the work area
- The measures employees must take to protect themselves from these hazards including specific procedures implemented by U-M, such as appropriate work practices, emergency procedures and personal protective equipment (PPE) to be used
- How to detect the presence or release of hazardous chemicals in the work area
- The requirement that chemical packets are to be triple-rinsed prior to their return to the supervisor at the end of each shift

Additionally, custodians participate in Beyond Compliance and Protect Yourself trainings. Finally, U-M provides yearly compliance trainings for all (OS1) staff.

Chemical concentrates

In the (OS1) program, there are 3 concentrated, daily-use cleaning products utilized. Provided by PortionPac and Green Seal-certified, these pre-measured chemicals are always mixed one Pac to one bucket, bottle or tank of cold water, greatly reducing the opportunity for measuring mistakes. Training on proper dilution occurs during the (OS1) Boot Camp, after which cleaning staff are provided a sample kit to take home and use. All chemicals are color-coded to the correct dilution container (e.g. spray bottle, bucket) which have a fill line indicated on them.

Use of sustainable cleaning materials, products & equipment

Unger Micro Fibre Mops (#MM40Y & #MM40R) and Unger two-chambered mop buckets are used in the (OS1) program. The use of these reduces cross-contamination by separating fresh water from rinse water and provides for significantly higher levels of sanitation by removing 96% of surface debris and bacteria. Both are ergonomically-designed to help prevent employee injury.

Unger Microfibre Rags (#MF40R) are used for general cleaning on a daily basis. These rags are laundered and reused and remove 96% of surface debris and bacteria.

The Unger Ergo Toilet Brush, Ergo Toilet Swab and Nifty Nabbers are also ergonomically-designed to help prevent employee injury. Additionally, the Nifty Nabber prevents employees from coming into contact with debris in restrooms, protecting employee health and decreasing the chance of cross contamination.

Daily cleaning chemicals used in (OS1) are pre-portioned and provided to custodians prior to each shift according to their assignment and need, reducing the chances for chemical waste. The floor cleaner and general purpose cleaner, provided by PortionPac, are Green Seal-certified, while the restroom cleaner (also provided by PortionPac) is U.S. EPA-approved.

The chemical used for carpet care is provided by Spartan and uses a biodegradable surfactant, is phosphate-, fragrance- and dye-free and is pH neutral.

The glass cleaner used, provided by Spartan, is Green Seal-certified and EPA Design for the Environment-formulated.

As a part of the (OS1) program, the ProTeam Super CoachVac backpack vacuum is used. This vacuum reduces back strain and injuries and has lower particle emissions than traditional upright models. It is recognized by the U.S. Green Building Council (USGBC), is an American Lung Association Health Partner and is certified Gold as a part of the Carpet and Rug Institute's (CRI) Green Label Program.

The following equipment is also used in (OS1):

- The Tennant 1610 extractor is recognized by the USGBC and the CRI Green Label Program.
- The Advance Pacesetter and the Advance Advolution 20XP are both Green Seal-certified.
- Both the Tennant T-3 and Tennant T-5 floor scrubbers have received USGBC and NFSI (National Floor Safety Institute) certifications.

Toilet tissue used is Kimberly Clark #07006 which contains a minimum 20% post-consumer recycled content and is Forest Stewardship Council (FSC) certified.

Recycling bin liners are sourced from Petoskey Plastics, contain a minimum 70% post-consumer recycled content and are from a Michigan company.

Green Cleaning: Custodial Effectiveness Assessment

U-M building auditors inspect areas cleaned by the (OS1) Green Cleaning System using the APPA "Custodial Staffing Guidelines" to determine the appearance level of the facility. Using staff from another department helps

ensure an unbiased assessment of the aesthetics of areas cleaned using (OS1). On average, buildings participating in (OS1) achieve a 1.87 score on the APPA scale after 9 months in the program. Improvements to the cleaning approach will be made in any areas that fall below the occupying school or department's expected standard. Custodial effectiveness audits will occur at least annually for **<Inset Project Name>**, with all results documented and provided to the building's facility manager. Building auditors inspect a representative sample of each building by reviewing a subset of the areas and floors of each building. Handheld devices are used to record findings. These findings are later uploaded into a Work Management inspection program that allows reports to be generated and shared with building facility managers.

Auditors begin by assessing the building floor plan according to the APPA space categories and measure the space using gross square feet. Spaces to be audited are randomly selected. The auditors are staff from U-M's Work Control department, a department not affiliated with the (OS1) program, to ensure an unbiased assessment of the cleaning program. The auditors utilize the APPA scoring system of appearance levels. Audits are conducted without notice to custodial staff and occur during normal business operations. Once the audit is complete, the overall appearance level of the building is calculated for each space type.

Green Cleaning: Purchase of Sustainable Cleaning Products and Materials

Daily cleaning chemicals used in (OS1) are pre-portioned and provided to custodians prior to each shift according to their assignment and need, reducing the chances for chemical waste. Purchases are tracked by the custodial supplier. The floor cleaner and general purpose cleaner, provided by PortionPac, are Green Seal certified, while the restroom cleaner (also provided by PortionPac) is US EPA-approved.

The chemical used for carpet care is provided by Spartan and uses a biodegradable surfactant, is phosphate-, fragrance- and dye-free and is pH neutral.

<u>Cleaning products</u>

The general purpose cleaner used in (OS1) is the PortionPac ScrubPac Heavy Duty All Purpose Detergent (#102), which meets the Green Seal GS-37 standard.

The floor cleaner used in (OS1) is the PortionPac MopPacLite pH Neutral Floor Cleaner (#1802 and #1804), which meets the Green Seal GS-37 standard.

The glass cleaner used in (OS1) is the Spartan Green Solutions Glass Cleaner (#102), which meets the Green Seal GS-37 standard.

<u>Floor care products</u>

The floor finish used in (OS1) is the Johnson Diversey Stride Citrus Neutral Cleaner, which meets the Green Seal GS-37 standard.

The stripper used in (OS1) is the Johnson Diversey Freedom Stripper, which meets the Green Seal GS-40 standard.

<u>Janitorial paper products and trash bags</u>

The bathroom tissue provided by PBGS through the (OS1) program is the Kimberly-Clark Scott Coreless JRT Jr. Bathroom Tissue (#07006), which meets the U.S. EPA Comprehensive Procurement Guidelines for Janitorial Paper.

The paper towel provided by PBGS through the (OS1) program is the Kimberly-Clark Scott Hard Roll Towels (#01040), which meets the U.S. EPA Comprehensive Procurement Guidelines for Janitorial Paper.

The plastic trash bags used in the recycling bins in (OS1) are Petoskey Plastics Recycling Bin Liners, which meet the U.S. EPA Comprehensive Procurement Guidelines for Plastic Trash Can Liners.

U-M's goal for sustainable cleaning product purchases (by cost) is 50%.

Green Cleaning: Safe Handling & Storage of Chemicals
Custodians are kitted daily with only the amount of product they need that day through the use of control cabinets and distribution trays. Access to these cabinets and trays are limited to a few individuals within each shop. Two-thirds of the daily-use cleaning products are greencertified and do not pose a risk to custodians or building occupants. The final daily-use product is our disinfectant and its use is limited to cleaning restrooms and drinking fountains.

All custodial and supervisory staff are trained to recognize the difference between hazardous and non-hazardous spills. Biological and/or infectious hazards (e.g. large amounts of blood) are handled by the University of Michigan's Occupational Safety & Environmental Health (OSEH) department, with U-M Plant Building and Grounds Services providing support, as needed. When such a spill occurs, the Plant Operations Call Center is contacted and OSEH is appropriately dispatched. Other spills that cause dangerous conditions (e.g. a slippery floor) are often defined as non-hazardous by OSEH and are instead addressed by the custodial crew.

Green Cleaning: Sustainable Cleaning Equipment
(OS1) utilizes custodial equipment that reduces the exposure of building occupants and maintenance personnel to potentially hazardous chemical, biological and particulate contaminants that adversely affect air quality, human health, building finishes, building systems and the environment. U-M maintains a log for all powered cleaning equipment to document the date of equipment purchase and all repair and maintenance activities. This log also includes vendor specification sheets for each type of equipment in use.

As a part of the (OS1) program, U-M uses the ProTeam Super CoachVac backpack vacuum. These ergonomically-designed vacuum and associated tools reduce back strain and injuries and have lower particle emissions than traditional upright models. It is certified Gold as a part of the CRI Green Label Program and operates with a sound level of 66dB.

The Tennant 1610 extractor is used by U-M in its administration of (OS1). This self-propelled extractor is certified by the CRI's "Seal of Approval" Testing Program for deep-cleaning extractors. Both the Tennant T-3 and Tennant T-5 floor scrubbers are also used. They are equipped with variable-speed feed pumps and on-board chemical metering to optimize the use of cleaning fluids. All are designed with safeguards to reduce potential damage to building surfaces.

There are two floor buffers used in (OS1): the Advance Pacesetter and the Advance Advolution 20XP. Both are equipped with vacuums, guards and/or other devices for capturing fine particulates, operate with a sound level of less than 70 dB and have adjustable angle handles.

Green Cleaning: Standard Operating Procedures
Standard operating procedures (SOPs) have been established for how our cleaning and hard floor and carpet maintenance system will be consistently utilized, managed and audited. All custodians attend the same series of trainings on the (OS1) system of cleaning and green floor care, ensuring that the way in which buildings are cleaned and floor care is administered is consistent. Examples of training materials are available by request. Management of custodial implementation of these SOPs is provided by custodial supervisors, who are then managed by area managers. This multi-tiered system of management increases adherence to the green cleaning program. Finally, adherence to the system is provided by both internal and external auditors. Plant Building & Grounds Services, the department that administers the campus green cleaning program, provides unannounced, internal audits of how well the cleaning and floor care systems adhere to the standard program. Additionally, auditors from another U-M department, Work Management, provide their own unannounced audits of spaces.

Green Cleaning: Indoor Chemical and Pollutant Source Control
The use of mats at public entryways is standard practice in the (OS1) program. Waterhog brand mats are placed at all public campus entryways and are at least 10 feet long. Mats are regularly vacuumed and are deep-cleaned on a scheduled basis. Regular mat cleaning is documented on custodial job cards and deep-cleaning is documented by the U-M supervisor who schedules all deep-cleaning on campus. Entryways are maintained through a daily

cleaning routine that includes vacuuming, dusting and mopping. The cleaning is documented through the use of (OS1) job cards.

Low-maintenance vegetation is installed a public building entrances and plants are selected based on an integrated pest management approach to eliminate pesticide applications that could be tracked into the building. Exterior walkways are maintained by blowing or sweeping pavement to completely remove dirt or other debris from pedestrian paving surfaces. This is achieved through the use of power air blowers, brooms or a combination of both. Dirt and debris are also removed from the flat surfaces of paving, corners between paving and walls, the tops of walls, if visible, from under site furniture, from stair treads and risers and from handicap ramps. This cleaning is documented both in the U-M Grounds Services work plan and on employee time cards.

Electrical outlets are provided at all public building entrances for maintenance and cleaning. While buildings may not have containment drains plumbed for the appropriate disposal of hazardous liquid wastes in areas where water and chemical concentrate mixing occurs for laboratory purposes, chemicals and hazardous wastes are contained until U-M OSEH (Department of Occupational Safety and Environmental Health) collects them for disposal.

Green Cleaning: Protecting Vulnerable Building Occupants
In order to protect building occupants who are disproportionately affected by cleaning practices, procedures exist to minimize cleaning product and equipment exposure to these groups. The majority of the procedures revolve around cleaning scheduling, where cleaning tasks are completed during evenings, nights and weekends. In rare cases, a different type of equipment that provides the same cleaning and environmental benefit may be used in the vicinity of the vulnerable occupant(s). It is standard that intensive cleaning activities, like carpet cleaning and floor stripping, are scheduled during academic breaks, when fewer occupants are in the building.

Green Cleaning: Indoor Integrated Pest Management
U-M has a Pest Management group available for all campus pest problems. For each campus building, an integrated pest management plan is created, followed and provided to the facility manager. Buildings are inspected on a monthly basis and a report is created after each inspection. Areas of the building, pests found (if any) and treatment strategies are all highlighted in these reports. Primary treatment strategies include physical or behavioral modifications of the area with the pest problem and those working or residing in that area. Physical modifications include structural repairs such as:

- Repairing and/or replacing window screens,
- Adding window screens where needed,
- Installing self-closing entrance doors with no more than 1/8” floor clearance and
- Using tight-fitting lids on refuse containers.

Behavioral modifications include training staff to do t**h**e following:

- Close doors,
- Maintain floor drains,
- Use sealable containers in food service applications,
- Rotate food stock,
- Immediately discard infested incoming stock,
- Check for leaks in plumbing and machinery,
- Avoid excess accumulation of paper goods,
- Rinse used beverage containers prior to recycling,
- Clean refrigerator drip pans routinely,
- Clean spilled debris promptly,
- Report any leaking or standing water and
- Cleaning the compactor area at the loading dock routinely. All cleaning methods employed at the loading dock shall comply with IEQ credits 3.1, 3.2, 3.3 and 3.4.

Once all non-toxic options are exhausted, the least-toxic pesticide is used for the pest issue. If a pesticide is recommended for a pest issue, treatments specific to the pest are applied in targeted locations.

Emergency applications of pesticides only occur when there is an immediate threat to building occupants and/or structural elements of the building. An emergency is defined as an immediate health threat to building occupants and/or a threat to the structural elements of the building.

When pesticide applications, including non- and least-toxic pesticides, are required for pest control, notices are posted at least 72 hours prior to the application of a pesticide and within 24 hours after an emergency pesticide application within a building. Treatment cards are left immediately following scheduled pesticide applications and contain information on the pesticide used and the location it was used in.

Green Cleaning: Occupant Feedback

Occupant feedback is essential to custodial operations at U-M and a variety of methods to collect feedback are utilized:

- Customer Survey: Every other year, the University of Michigan Business & Finance group (B&F) conducts a customer survey on a variety of services provided by associated units, including custodial services. This survey is sent electronically to U-M staff, faculty and students and provides a method for individuals to provide anonymous feedback about custodial services, cleanliness and opportunity to suggest new cleaning technologies, procedures and processes.
- Email: An (OS1)-specific email address is available for customers to submit concerns, complements and questions. This email address, os1help@umich.edu, routes emails to the Plant Building & Grounds Services business office to ensure timely and accountable responses.
- Facility Managers: Custodial supervisors and area managers are in regular contact with campus facility managers through regularly scheduled meetings, as-needed meetings, email and phone calls. Customers often voice comments and concerns to their facility manager whose responsibility it is to relay that information to the custodial supervisor. Also, these regularly scheduled meetings promote discussion on new cleaning technologies, procedures and processes.

Once feedback is received, it is handled in one of 3 ways:

a. One-time service issues are remedied within 24 business hours.
b. On-going issues are addressed with the customer and/or facility manager to determine the most acceptable solution to the issue given the green cleaning system, staff availability and funding availability.
c. Praise and complements are shared with the building's custodial crew as well as the department as a whole through the departmental newsletter.

One-time and on-going issues, once addressed in the short term, are taken to Plant Building Services Lead Team meetings for discussion and brain-storming. Often, long term solutions are identified during these meetings. If not, a team member will conduct additional research on solutions, often by benchmarking against other green cleaning programs to determine how they have addressed the issue.

Green Cleaning: Hand Hygiene and Hand Soap

Hand hygiene is of utmost importance at U-M. Administered by U-M's Occupational Safety and Environmental Health (OSEH) department, the campus hand washing and hand sanitizer outreach program is designed to reduce the spread of illness within facilities. Hand washing posters are distributed throughout buildings and tips on proper hand washing technique and use of alcohol-based waterless hand sanitizers are available on the University's gateway website (see attached document).

<u>Hand Soaps</u>

The general hand soaps used in (OS1) are Spartan Lite'N Foamy Foaming PearLux and Spartan PearLux, both of which contain no antibacterial agents.

Hand Washing Safety Tips

How to wash your hands

First wet your hands with water. Then cover your hands with soap and rub your hands together vigorously for 20–30 seconds. Be sure to cover all of surfaces your hands and fingers and clean around and under your nails. Then rinse your hands with water and dry them completely. If possible, it's always best to use a dry paper towel to turn off the faucet.

You should remember to wash your hands when they're visibly dirty, before you eat or handle food, after you go to the bathroom, after blowing your nose, coughing, or sneezing, and after handling trash. You should also wash your hands after you change a diaper and before and after you help someone who's sick.

Hand washing instructions:

- Wet your hands with water
- Cover your hands with soap
- Rub your hands together vigorously for 20–30 seconds
- Cover all of surfaces your hands and fingers and clean around and under your nails
- Rinse your hands with water and dry them completely
- Use a dry paper towel to turn off the faucet

How to use hand sanitizer

Hand sanitizer works best if your hands aren't obviously dirty. You can use it in class, when you're on the bus, after petting an animal, after using the computer lab, and just generally when you want to clean your hands but there's no soap and water available.

To clean your hands, just put one pump — about a dime to a quarter sized amount — of hand sanitizer in the palm of your hands and rub your hands together. You want to cover all of your hands and fingers, including around and under your nails. Keep on rubbing your hands until the alcohol dries. If you used the right amount, it should take about 10–15 seconds for your hands to dry.

Hand sanitizer instructions:

- Apply quarter-sized amount to the palm and rub hands together
- Cover all surfaces of hands and fingers, including around/under fingernails
- Continue rubbing hands vigorously until alcohol dries
- If you applied the right amount, it should take at least 10–15 seconds before hands are dry

Source: University of Michigan School of Public Health.

© 2011 The Regents of the University of Michigan
Ann Arbor, MI 48109 USA
Phone: +1 (734) 764-1817

Green Cleaning: Performance Metrics
The performance of U-M's green cleaning program is measured through our quality assurance (QA) program. This program, administered by staff from another department to help ensure unbiased assessments, is based upon the Association of Higher Education Facilities Officers (APPA) cleanliness scores. A baseline score has been established based on APPA recommendations. Buildings that do not meet this standard are evaluated for staffing levels, scheduling and training and adjusted, as needed.

Green Cleaning: Time Period
UM's green cleaning policy is applicable indefinitely.

Green Cleaning: Responsible Parties
John Lawter
Associate Director
Plant Building & Grounds Services
109 East Madison
Ann Arbor, MI 48104
(t) 734.647.3852
(e) jlawter@umich.edu

- Responsible for ensuring departmental compliance in administering the green cleaning policy.

<u>UM Plant Building & Grounds Services' Area Managers</u>
Plant Building & Grounds Services
109 East Madison
Ann Arbor, MI 48109
(t) 734.764.0532

- Responsible for ensuring that custodial supervisors implement the green cleaning programs within their assigned buildings.
- Required to provide additional training supervisors, as needed, to ensure that the green cleaning policy is adhered to.
- Responsible for determining the steps to be taken in order for buildings not meeting the performance metric to meet the goal.
- Responsible for fielding questions and concerns from campus stakeholders about the green cleaning program.

<u>UM Plant Building & Grounds Services' Custodial Supervisors</u>
Plant Building & Grounds Services
109 East Madison
Ann Arbor, MI 48109
(t) 734.764.0532

- Responsible for ensuring that the green cleaning program is administered within their assigned buildings.
- Responsible for providing additional skills training, as needed, to custodians to ensure their successful participation in the green cleaning program.

<u>UM Plant Building & Grounds Services' Custodians Plant Building & Grounds Services</u>
109 East Madison
Ann Arbor, MI 48109
(t) 734.764.0532

- Responsible for cleaning their assigned facilities within the scope of the green cleaning program.

SUSTAINABLE PRODUCTS PORTFOLIO

General

The Sustainable Products Portfolio (SPP) consists of a list of sustainable products that the University has evaluated and which have been found to meet our sustainable selection criteria. For a complete list of criteria which are applied to products under review consult 3.3 Sustainable Products Portfolio. The SPP is a resource that project teams are encouraged to use to select sustainable products. It is by no means an all inclusive list of available sustainable products and technologies. It is not intended to limit competition or replace creative sustainable design solutions. Do not substitute this list for your professional judgment concerning appropriate products and materials.

Because the SPP is in the early stages of development it is currently quite short. As other products are reviewed the list will be updated.

This list is updated as needed.

Table of Contents

Section 07530 Green Roofs
Section 09680 Carpeting

Approved Products

Section 07530 – Green Roofs

Vegetative Roofing:
- XeroFlor.

Section 09680 - Carpeting

Carpet Tile:
- Blue Ridge *Color Stripes*.
- Blue Ridge *Color Blocks*.

UNIVERSITY OF MICHIGAN
ARCHITECTURE, ENGINEERING AND CONSTRUCTION

UNIVERSITY ARCHITECT'S OFFICE
326 East Hoover, Mail Stop E
Ann Arbor, MI 48109-1002
Phone: 734-764-2456
Fax: 734-763-3238

Post Occupancy Thermal Comfort Corrective Action Plan

<Insert Date>:
<Insert Project # and Name>
<Insert Building# and Name>

IEQc7.2 Thermal Comfort, Verification

In complying with the LEED-NC v3.0 IEQc7.2 Thermal Comfort, Verification, the Architecture, Engineering, and Construction (AEC) Sustainability Team will administer occupant surveys between 6-18 months after occupancy. The survey results will be provided to the project Commissioner; issues resulting from the survey responses will be addressed in conjunction with the Enhanced Commissioning efforts of the project.

Thermal Comfort Survey

AEC will provide building occupants with an anonymous web-based survey based on the requirements of the LEED Reference Guide for Green Building Design and Construction and in accordance with ASHRAE Standard 55-2004 (with errata but without amendments). The survey will address areas of thermal comfort including temperature, airspeed, humidity, clothing, and activity. AEC and appropriate university personnel will review the results of the survey and identify any areas of concern. Please see the file named 'UM PostOccupancyThermalComfortSurvey.docx' for a copy of the survey instructions and questions.

Thermal Comfort Corrective Action Plan

Upon reviewing the responses of the thermal comfort survey, the project Commissioner, in conjunction with the design and construction and facilities maintenance teams, will identify the cause of the discomfort and will decide on the appropriate actions for addressing the occupant concerns. The results of the survey will also be compared to the Basis of Design thermal comfort design criteria established for the project.

Examples of corrective action may include adjustments to thermal controls (temperature set-points, schedules, operating modes) and diffuser airflow adjustments. If corrective action is necessary, a follow-up survey will be conducted as well as continued monitoring to ensure the thermal comfort issues have been fully addressed.

Permanent Monitoring System

A Direct Digital Control (DDC) system is included in the building to ensure that building performance meets the desired comfort criteria as determined by IEQc7.1 Thermal Comfort, Design. This system provides control and monitoring at both the room and building level. In turn, the DDC system is networked back to the University's Building Automation Services (BAS) department, which monitors DDC control points campus wide, and is staffed 24/7. Additional information can be found on the BAS website: http://www.plantops.umich.edu/maintenance/shops/BAS/. The DDC system has extensive capability to monitor room environmental performance. A typical space is served by a DDC controlled terminal unit, utilizing electronic sensors that measure room environmental conditions. These sensors are directly accessible by the DDC system for trend logging, point alarming, and troubleshooting purposes. This capability is used during commissioning as well as after occupancy to assure thermal comfort conditions are being maintained. Building environmental systems are similarly DDC controlled and monitored.

UNIVERSITY OF MICHIGAN
ARCHITECTURE, ENGINEERING AND CONSTRUCTION

UNIVERSITY ARCHITECT'S OFFICE
326 East Hoover, Mail Stop E
Ann Arbor, MI 48109-1002
Phone: 734-764-2456
Fax: 734-763-3238

Dear Employee:

Architecture, Engineering, and Construction (AEC) would like to solicit your advice and feedback *on <Insert Building # and Name, insert project name and number>*. We appreciate that you are willing to take the time to participate in this survey.

AEC is responsible for the design and construction of U-M's new buildings as well as renovations. First and foremost, your response will help us fine-tune this building to be sure we are providing pleasant and productive workplaces for the employees and the public. Additionally, AEC will use your response to guide the design and construction of future projects.

Instructions:

Please complete the survey below. If you would like to provide more information or an opinion on any specific issue, you may provide comments in the box at the end of the survey.

All responses will be kept strictly confidential.

If you need any assistance in completing this form or need the survey supplied in a different format, please contact <aec.sustainability.team@umich.edu>.

Thank you for your time and assistance.

AEC Sustainability Team

Architecture, Engineering & Construction (AEC)

Background

Date:
Time:
Room Number:
For which department do you work?
Which floor is your primary workspace located?
Which area of the building is your primary workspace located (north, east, south, west, core):
Equipment:

Is there equipment located within or near your workspace that may be adding or taking away from comfort? (Fax machines, fans, copiers, additional lighting, space heater, etc.)

Please indicate type of equipment and quantity: _____

Occupant Activity Level

- ❒ Reclining
- ❒ Reading Seated, Keyboarding or other light physical activity
- ❒ Standing, Relaxed
- ❒ Light Activity, Standing
- ❒ Medium Activity, Standing
- ❒ High Activity

Personal Workspace

Which of the following best describes your primary personal workspace?

(Check one)

In addition to your primary personal workspace, if your job involves spending a significant amount of time in a **secondary location** please indicate such by marking a **2** next to your secondary workspace.

Office spaces:

- ❒ Private office with floor to ceiling walls and a door
- ❒ Shared office (with other people) with floor to ceiling walls
- ❒ Open area with cubicles
- ❒ Other, please specify:_____

Non-Office Spaces:

- ❒ Service desk
- ❒ Laboratory
- ❒ Multi-purpose space
- ❒ Other, please specify: _____

Comfort at your Primary Personal Workspace

How satisfied are you with the following aspects of air quality / thermal comfort:

	Very Satisfied	Satisfied	Somewhat Satisfied	Neutral	Somewhat Dissatisfied	Dissatisfied	Very Dissatisfied
a) Temperature	❒	❒	❒	❒	❒	❒	❒
b) Humidity	❒	❒	❒	❒	❒	❒	❒
c) Air movement	❒	❒	❒	❒	❒	❒	❒
d) Radiant Temperature (Floor, wall, etc. surface temp)	❒	❒	❒	❒	❒	❒	❒

If you indicated any *dissatisfaction* with the air quality / thermal comfort in your workspace, which of the following contribute to your dissatisfaction?

(check all that apply)

- ❒ Air is stuffy / stale
- ❒ Air seems dirty
- ❒ Air has odor
- ❒ Insufficient air flow
- ❒ Too much air flow
- ❒ Noisy air flow
- ❒ Air is too cold in summer
- ❒ Air is too hot in winter
- ❒ Other, please specify:_____

In general, how would you describe the thermal conditions of your workspace?

- ❒ Hot
- ❒ Warm
- ❒ Slightly warm
- ❒ Neutral
- ❒ Slightly cool
- ❒ Cool
- ❒ Cold

Additional Information

Please feel free to provide any additional comments or specific details related to the thermal comfort of your workspace or non-office public spaces within the building.

Contact Information (Optional)

Please provide contact information to better provide corrective action.

Name:

Email:

Office Telephone:

OUT TO BID

DESIGN GUIDELINES

1.0 CODES AND REGULATORY AGENCIES

2.0 PROJECT PROCEDURES

3.0 SUSTAINABILITY

4.0 SPECIAL INSTRUCTIONS TO DESIGNERS

5.0 SPECIAL BUILDING AREAS

6.0 TECHNICAL REQUIREMENTS

7.0 MASTER SPECIFICATIONS

8.0 PREFERRED MANUFACTURERS LIST

9.0 STANDARD DETAILS AND SCHEDULES

10.0 CHANGES TO DESIGN GUIDELINES

BUILDING COMMISSIONING

CONTRACTS & AGREEMENTS

4.0 SPECIAL INSTRUCTIONS TO DESIGNERS

	Last Update	Previous Version	Replaces Document
4.1 Compatibility with Existing Conditions	May 2014	December 1991	SID-C Compatibility with Existing Conditions
4.2 Building Envelope	August 2014	May 2014	SID-A Building Envelope
4.3 Building Commissioning	July 2016	April 2016	SID-G Commissioning
4.3.1 Design Phase Commissioning	November 2016	October 2012	
4.3.2 MEP Design Management	November 2016	October 2012	
4.3.3 Full Construction-Phase Commissioning	July 2016	April 2016	
4.3.4 Reduced Scope Construction Phase	July 2016	April 2016	
4.3.5 Commissioning Plan Procedure	July 2016		
4.3.6 General Commissioning Procedures	October 2017	July 2017	
4.4 Site/Civil			
4.4.1 Landscape Materials	January 2017	November 2012	SID-T Landscape Materials
4.4.2 Site Furnishing Standards Manual	December 2010		
4.4.3 Stormwater Best Management Practices Manual	Removed January 2017	December 2010	
4.4.4 Banners			
4.4.5 Site Signage	February 2016		

4.5 Regulated and Hazardous Materials	July 2008	July 2006	SID-I Regulated and Hazardous Materials
4.6 Utilities for University Buildings	November 2015	July 2013	SID-J University Provided Utilities
4.7 Building Access Control	March 2018	November 2014	SID-Q Building Access Control
4.8 Fall Protection on Rooftops	August 2016	June 2010	SID-R Fall Protection on Rooftops

© 2018 Regents of the University of Michigan

326 East Hoover, Ann Arbor, MI 48109-1002
Phone: (734) 763-3020
Contact Us

DESIGN GUIDELINE 4.1
COMPATIBILITY WITH EXISTING CONDITIONS

Related Documents

U-M Design Guidelines:
4.5 Regulated and Hazardous Materials
4.6 University Provided Utilities

Existing Conditions

A/E responsibilities:

- Review original building and renovation drawings located in the AEC Facilities Information Center (FIC).
- Visit the site prior to start of design to determine existing conditions. Review University provided Facility Condition Assessment (FCA) report with Design Manager for inclusion in project scope.
- Base design upon the actual conditions, not original or renovation design drawings and specifications.
- Update riser diagrams.
- If upgrades to any building central system is necessary to meet the new needs, review with Design Manger.
- University of Michigan Hospitals and Health Centers (UMHHC) Facilities Planning and Development
    - Contact UMHHC Facilities Planning for record documents ("as builts") of UMHHC buildings.
    - UMHHC Building keyplans are available on the Facilities Planning website. Please contact Facilities Planning for password access.
    - UMHHC Facilities Planning and Development maintains a set of PDF keyplans on the website to record any corrections. When an error is found on as-builts FPD requests that a comment is made on the PDF utilizing Adobe and an email sent to FAC-ProjectDept@med.umich.edu noting the corrections.

Utility Sources

Utilize central utilities and building systems in lieu of stand-alone systems. Coordinate with the Design Manager early in the design phase of the project to determine the best sources for central services. The Design Manager will coordinate approval of sources prior to schematic design.

Utility Capacity

As part of schematic design, demonstrate that the proposed project will not adversely affect utility availability for existing users, nor utilize inordinate amounts of future capacity. When a utility is upgraded, provide for other planned consumers and future capacity.

Determine available capacity early enough in the planning / schematic design process for funding to be allocated within the renovation project for increased services if needed.

Existing Condition Assessment

As a part of schematic design, the Design Manager will provide a listing of any outstanding code deficiencies in areas to be renovated for incorporation into the project. Bring additional items uncovered during surveys and site visits to the attention of the Design Manager who will seek funding for incorporation of such items into the project.

Construction documents should include firestopping / patching of all existing and new openings in fire and acoustical separations to maintain performance of the system. Infill material shall match fire and / or acoustical properties of existing partition for continuity.

Existing Hazardous Materials

Design Manager shall provide surveys of existing building materials establishing the presence of hazardous materials such as lead, asbestos, PCB and regulated building materials. The surveys will be obtained from University of Michigan OSEH, Occupational Safety and Environmental Health. A/E shall include surveys in construction documents if there is hazardous material present. Design Manager shall coordinate with A/E and OSEH for process for removal of materials.

DESIGN GUIDELINE 4.2
BUILDING ENVELOPE

Scope

Building envelopes shall effectively control moisture migration, heat transfer and air leakage. This Design Guideline highlights areas requiring special attention and consideration with respect to building envelope design. This guideline also includes the U-M Building Envelope design review process and requirements.

Related Sections

U-M Design Guideline Sections:
2.1 Owner's Project Requirements and Basis of Design Documents
6.1 – DG 075000 Roofing Systems and Accessories
6.1 – DG 079200 Joint Sealants
6.1 – DG 084113 – Aluminum-Framed Entrances and Storefronts
6.1 – DG 085113 – Aluminum Windows
6.1 – DG 088000 – Glazing
6.1 – DG 084413 – Glazed Aluminum Curtain Walls

Reference Documents:
U-M Envelope Inspection Form
ASTM E 783 Standard Test Method for Field Measurement of Air Leakage Through Installed Exterior Windows and Doors
ASTM E 2357 Test Method for Determining Air Leakage of Air Barrier Assemblies
ASTM E 2178 Standard Test Method for Air Permeance of Building Materials

Moisture Control

Moisture control shall be a primary consideration in the building envelope design of new buildings, additions and renovations. Moisture migration from bulk water, capillary water, vapor diffusion and air leakage shall be minimalized. Perform the following tasks to ensure moisture control in the design of the building envelope:

- Confirm the location of the water table and soil conditions prior to the start of design. Moisture prevention and control for below-grade walls shall be designed for the water table location and soil conditions specific to the project site.
- Perform dew-point analysis of exterior wall assemblies for all new buildings, renovations adding a significant amount of insulation to the envelope and when moisture load generated within the space is expected to increase significantly. Confirm that materials will be above the dew-point and will not accumulate moisture on the conditioned side or the inside of the envelope assembly.
- Provide comprehensive detail drawings for windows, doors, skylights, stacks, ducts, and all other envelope penetrations that will protect the building from water infiltration.

- Ensure efficient shedding of rainwater and prevent moisture infiltration into wall constructions. Provide adequate drainage and ventilation systems (e.g. weep holes) to prevent the collection of water in wall cavities.
- Provide designs that accommodate special programming conditions which impact the building envelope (e.g. an interior with high relative humidity levels).

Thermal Performance

Thermal performance shall be considered in the design of the building envelope to control heat transfer through conduction, radiation, and convection.

- Prevent conductive heat loss caused by thermal bridging in foundation and framing members.
- Minimize convective thermal loss with the prevention of air leakage through windows, doors and other penetrations in the building envelope.
- Select glazing and roofing materials to minimize radiative heat loss.
- Minimize thermal heat gain and maximize occupant comfort by shading exterior windows and the building envelope.
- Consider the orientation, size and performance of fenestration to minimize solar radiation while balancing the amount of daylighting with the amount of heat loss.
- Ensure reduction of heat loss by including details and specifications that identify the type and thickness of insulation for exterior walls, floors, ceilings, and roof areas.
- Carefully select materials and design placement of air barriers to ensure air tightness of the building envelope.

Continuous Air Barrier

For all new building construction and additions design a fully continuous air barrier for the entire building envelope that is capable of controlling air leakage into and out of the conditioned spaces.

- Design the air barrier assembly to withstand positive and negative air pressures due to design wind pressures, stack effect and fan pressures.
- Pay particular attention to the design of the air barrier at joints and points of intersection of two different building materials to maintain continuity. The design shall have enough strength and flexibility to accommodate differential movement of material substrates.
- Design the air barrier to remain in continuous contact with its substrate material in the building envelope.
- Select durable materials for the air barrier assembly, that will last the lifetime of the building.

For additions, design a complete air barrier for the addition enclosure as described above. Where existing walls and/or roof construction abut the new addition, continue the air barrier through the wall or roof construction in order to prevent air leakage at the juncture between the new and old construction.

- U-M does not have a preference for a particular type of air barrier or air barrier assembly. Select materials which are listed by the Air Barrier Association of America. It is acceptable to have a combined air barrier and vapor retarder; however, when they are combined the barrier must be located on the inside of the thermal insulation of the building envelope (for projects in Michigan).

U-M Building Envelope Design Review

Projects with a scope of work related to above and/or below-grade building enclosure elements will undergo a building envelope design review process. This review process will evaluate the materials, components, systems, and assemblies that comprise the above and/or below-grade building enclosure. Building Envelope Design Review shall begin at Schematic Design and continue until the end of Bid Documents phase.

Schematic Design Phase

- Establish the building envelope performance goals with building occupants and U-M Design Manager.
- Include envelope description and performance goals in the Owner's Project Requirements and Basis of Design (OPR/BOD) documents.
- Promote the use of construction mock-ups and other quality assurance techniques and participate in the evaluation of building envelope mock-ups.

Design Development Phase

- Further develop BOD document to include a building enclosure design description of materials, components, systems, and assemblies that make up the building envelope.
- Conduct a minimum of one meeting during DD dedicated to the presentation of the building envelope design to U-M and, when hired by U-M, a Building Envelope Specialist (BES). At the meeting, present drawings and specifications that demonstrate the envelope design concept as it relates to thermal protection, moisture control, and air leakage.
- During the Owner's Review of the DD documents, the BES shall provide written comments on the envelope design. Respond to the comments per U-M's document review procedures.

Construction Documents Phase

- Update BOD document to clarify and expand on the design description of materials, components, systems, and assemblies that make up the building envelope.
- Complete detail drawings of all transitions, perimeter sealing around fenestrations, doors, and penetrations through the exterior walls by structural members, parapet walls, etc.
- Provide specifications that include instructions about prepping surfaces and any primers needed to insure proper adhesion of air barrier materials.
- Include language for coordination of all trades whose work impacts the continuity of the air barrier. Reference the Air Barrier specification section in all of the affected trades.

- Include in the specifications the requirement for a pre-installation meeting with mandatory attendance by all trades whose work is related to the envelope, insulation, and the air and moisture barriers.
- Conduct a minimum of one meeting during CD dedicated to the presentation of building envelope design to U-M and the BES. Present drawings and specifications that demonstrate the effectiveness of envelope systems in controlling moisture migration, heat transfer and air leakage.
- During the Owner's Review of the CD documents, the BES shall provide written comments on the envelope design. Respond to the comments per U-M's document review procedures.
- At the end of CD phase, the BES shall provide a project specific version of the U-M Envelope Inspection Form. Review project specific U-M Envelope Inspection Form and submit recommendations for additional inspections and tests to the U-M Design Manager.

Inspection and Testing of Building Envelope

U-M will employ independent specialists, inspectors and testing agencies for projects involving building envelope work. To understand what will be inspected refer to the U-M Envelope Inspection Form. Consult with Design Manager regarding the scope of testing for this project.

DESIGN GUIDELINE 4.3
BUILDING COMMISSIONING

Scope

Most projects, especially those with extensive mechanical, electrical and plumbing (MEP) systems, will undergo a U-M building commissioning (Cx) process. The U-M Cx process is similar to Cx processes promoted by national trade organizations including ASHRAE, BCxA, NIBS and USGBC, but it includes more comprehensive design management and more extensive construction quality assurance. Detailed U-M Cx procedures ensure consistency among projects. Become familiar with, fully participate in and fully support this process.

Related Documents

U-M Design Guidelines:
DG 2.1 - Owner's Project Requirements (OPR) and Basis of Design (BOD)
DG 2.3 - Owner's Review
DG 3.1 - Sustainable Design and LEED® Requirements
DG 3.2 - Energy and Water Conservation
DG 4.2 - Building Envelope
DG 4.3.1 - Design-Phase Commissioning Procedure
DG 4.3.2 - MEP Design Management Procedure
DG 4.3.3 - Full Construction-Phase Commissioning Procedure
DG 4.3.4 - Reduced Scope Construction-Phase Commissioning Procedure
DG 4.3.5 – Commissioning Plan Procedure
DG 4.3.6 – General Commissioning Procedures

U-M Master Specification Sections:
MS 017823 – Operation and Maintenance Manuals
MS 019100 – Project Commissioning

Reference Documents:
ASHRAE Guideline 0, "The Commissioning Process"
ASHRAE Guideline 0.2, "Commissioning Process for Existing Systems and Assemblies"
ASHRAE Guideline 1.1, "HVAC&R Technical Requirements for the Commissioning Process"
ASHRAE Guideline 1.5, "Commissioning Process for Smoke Control Systems"
ASHRAE Standard 202, "Commissioning Process for Buildings and Systems"
Building Commissioning Association, "The Building Commissioning Handbook"
NIBS Guideline 3, "Building Enclosure Commissioning Process"
USGBC, "LEED® Reference Guide for Green Building Design and Construction"

General

Commissioning is a systematic quality assurance process to assure a project is designed to meet the needs of its Owners, and is built, operated and maintained as intended by its Design Team and its Owners.

- Cx helps a project achieve its schedule, budget and quality goals by utilizing the University's vast design, construction, operation and maintenance experience to proactively identify and help resolve issues as early and inexpensively as possible.
- Cx generally begins during Programming and ends after Occupancy.
- Cx focuses primarily on the project's utilities, mechanical systems, electrical systems, plumbing systems and "powered" architectural systems. Cx of the building envelope is also important to minimize air leakage, moisture migration and heat transfer, but Cx activities related to the building envelope require different skills. Thus building envelope design and construction Cx are addressed in Design Guideline 4.2.
- Cx verifies conformance with the project's design intent as documented in the Owner's Project Requirements (OPR) and Basis of Design (BOD) documents.
- Cx verifies compliance with U-M requirements for effluent, noise, vibration, cleanliness, efficiency, maintainability, operation and maintenance manuals, and Owner training.
- Cx verifies that completed systems and equipment perform as intended in all modes of operation and under all operating conditions. However, Cx does not duplicate or substitute for code inspection. Cx does not provide routine quality control such as routine inspections for material substitutions, point-to-point wiring checks or poor quality workmanship.

The U-M Building Commissioning Process

Large projects with complex and challenging MEP systems will undergo design-phase and construction-phase Cx. Most smaller projects with MEP scope will undergo construction-phase Cx only. Tunnel projects will undergo construction-phase Cx only, and only if they include powered mechanical equipment. Cx activities will be coordinated by the AEC Commissioning and Plan Review Group who will assign a Commissioning Authority (CxA) to each project.

Design-Phase Commissioning

Most projects with complex and challenging MEP systems will undergo design-phase Cx. The CxA will assist the U-M Design Manager by participating in the MEP design meetings, technical study reviews, Owner's reviews and value engineering (VE) efforts. See Design Guideline 4.3.1. Throughout design, the CxA will promote a clear and precise OPR and BOD to facilitate proper construction-phase Cx. The CxA will make recommendations regarding commissionable architectural and MEP systems, and require compliance with industry and U-M standards. The CxA will require inclusion of clear sequences of operation, setpoints, acceptance criteria and other details required for construction-phase Cx. Incorporate the CxA's input into the project's design.

New buildings, building additions, major building renovations and projects seeking LEED certification will undergo an expanded level of design-phase Cx called MEP design management. One or more CxAs will assist the U-M Design Manager by actively managing (not just participating in) all technical aspects of the MEP design. See Design Guideline 4.3.2. Final decisions related to the project's scope, schedule and budget will remain the responsibility of the Design Manager, but collaborate with the CxAs for technical direction on MEP issues.

- During the Construction Documents (CD) design phase, edit the U-M Operation and Maintenance (O&M) Manual Master Specification Section 017823 and Commissioning Master Specification Section 019100 to make these sections project specific. If a CxA has been hired prior to the CD review the A/E shall obtain review comments on the project specific version of 019100 from the CxA. Insert these sections into the project's Division 01 specifications to define the Contractors' O&M manual and Cx requirements during construction. Reference these sections in the appropriate architectural, mechanical and electrical specification sections. To avoid conflicts with these sections, do not include any specific O&M manual or Cx requirements in the individual architectural, mechanical, electrical or plumbing specification sections.

Design-phase Cx generally will begin during the Programming phase and will continue until the project is bid and awarded.

Construction-Phase Commissioning

All projects with significant MEP scope will undergo construction-phase Cx. Construction-phase Cx will be performed by a commissioning team typically consisting of the U-M Project Manager and representatives from the A/E, the Construction Manager or General Contractor, the trade contractors, the Owners and Plant Operations. The team will be directed by and Cx meetings will be led by the CxA. Assign an A/E Representative to this Cx team.

Projects with complex and challenging MEP systems, especially those over $5 million in construction cost, will undergo full construction-phase Cx. See Design Guideline 4.3.3 for a list of Cx activities. Projects that involve a small number of MEP system or equipment will undergo reduced scope construction-phase Cx. See Design Guideline 4.3.4 for a list of reduced scope activities. Participate in and assist the CxA with these activities.

Construction-phase Cx generally will begin when the project is issued for bids. It will continue through initial occupancy and may continue through the first year of occupancy.

Quality Assurance

Throughout a project's design and construction, the CxA will gather "lessons learned". As a means of continually improving the U-M design, construction and Cx processes, these lessons learned will be incorporated in the U-M Design Guidelines, Master Specifications and Cx Documents.

DESIGN GUIDELINE 4.3.1
DESIGN-PHASE COMMISSIONING

Scope

This design guideline describes the role and responsibilities the commissioner (a.k.a. Commissioning Authority, or "CxA") is to perform for design-phase commissioning (Cx). Design phase commissioning is performed on projects with complex and challenging mechanical, electrical and plumbing (MEP) systems. Normally design phase commissioning is handled by internal U-M commissioning staff, when staff is available. Occasionally the University hires an outside commissioning firm for this task; when done, this document outlines the minimum required scope of work.

Related Documents

U-M Design Guidelines:
DG 2.1 - Owner's Project Requirements (OPR) and Basis of Design (BOD)
DG 2.3 - Owner's Review
DG 3.1 - Sustainable Design and LEED® Requirements
DG 3.2 - Energy and Water Conservation
DG 4.2 - Building Envelope
DG 4.3 – Building Commissioning
DG 230900 – Mechanical Systems Controls

U-M Master Specification Sections:
MS 017823 – Operation and Maintenance Manuals
MS 019100 – Project Commissioning

Reference Documents:
ASHRAE Guideline 0, "The Commissioning Process"
ASHRAE Guideline 0.2, "Commissioning Process for Existing Systems and Assemblies"
ASHRAE Guideline 1.1, "HVAC&R Technical Requirements for the Commissioning Process"
ASHRAE Guideline 1.5, "Commissioning Process for Smoke Control Systems"
ASHRAE Standard 202, "Commissioning Process for Buildings and Systems"
Building Commissioning Association, "The Building Commissioning Handbook"
NIBS Guideline 3, "Building Enclosure Commissioning Process"
USGBC, "LEED® Reference Guide for Green Building Design and Construction"

General

The CxA will perform the following activities during the design phase:

1. Contact the U-M Design Manager, introduce themselves and describe their role. Find out the general schedule of the project and request to be invited to the appropriate MEP meetings.

- Recommend and establish with the Design Manager the frequency of the MEP meetings at each design stage (SD, DD, and CD). Also schedule a MEP kick-off meeting. Establish who will send out the meeting invitations, normally the Design manager.

2. Become knowledgeable about the project.
   - Attend at least one presentation regarding the project's program by the Architect/Engineer (A/E) to become familiar with the scope, schedule, budget, and design intent. At the first meeting attended, introduce yourself and describe your role briefly.
   - Request and review available program documents to learn about the project scope, including:
     - Number of floors, square footage of each floor, extent of new building or addition work, extent of renovation work, division of space by function (clinical, laboratory, classroom, office, support space), division of space among departments, etc.
     - Connections to and interactions with surrounding buildings, including any related renovations in surrounding buildings.
     - Site requirements including proposed grade, roadway and utility changes.
     - Schedule for the schematic design (SD), design development (DD) and construction documents (CD) design phases, and for project bidding and award.

3. Become knowledgeable about and promote adherence to the U-M Design Guidelines, Master Specifications, Standard Details, Preferred Manufacturers Lists and Design Deliverables list. Require that deviations from these standards be approved by the Design Manager and documented in memos, emails or meeting minutes, and the OPR/BOD.

4. As early in design as possible, promote the incorporation of U-M sustainability goals. See Design Guidelines 3.1 and 3.2.
   - Explain these Design Guidelines in detail to the A/E and promote the early identification of energy conservation measures.
   - Promote optimization of the building's aspect ratios, siting, glass orientation, glass area, glass type, exterior shading, daylighting features, envelope insulation, air and water barriers, etc.

5. Conduct an MEP kick-off meeting. *(Not required when external Commissioning firms are hired for design phase Cx.)*
   - The MEP design management kick-off meeting is typically held as part of the first SD MEP meeting.
   - Use the "MEP Meeting Master Kickoff Notes", found on the CPR drive, to conduct the first part of the meeting.
     - Revise the "Notes" to be project specific and pass them out at the meeting. Review/explain the items in the notes.
     - The level of review needed will depend upon how much work the A/E has done previously at U-M and whether they have been through a managed MEP process. Be cautious not to over-assume the A/E knows something.
     - Require the A/E to make the "Notes" an attachment to the meeting minutes.
   - Require the A/E communicate with Plant Operations, Department of Public Safety and Security (DPS), Occupational Safety and Environmental Health (OSEH), UH Facilities

Planning and Development (FP&D), and other U-M personnel through the CxA and Design Manager.

6. Participate in the MEP design meetings at SD, DD, and CD phases.
   - Assist the Design Manager determine the appropriate U-M personnel to invite.
   - Review the A/E's latest design including concepts, drawings and specifications.
   - Discuss the acceptability of the current concept for each system.
   - Review compliance with codes and U-M design standards.
   - Review for inclusion of Cx requirements in the design documents.
   - Identify incomplete design issues.

     - The A/E shall establish the agenda for the MEP meetings, but should obtain input from the CxA and other team members.
     - The A/E should distribute their design documents in advance when possible.
     - The A/E should publish detailed meeting minutes including an action list.

7. Participate in the A/E's development and maintenance of the Owner's Project Requirements (OPR) document as it pertains to system performance requirements and commissioned systems. See Design Guideline 2.1.
   - Review room data sheets produced by the A/E, Hospital Planner, Laboratory Planner, etc. for key project requirements that should be included in the OPR.
   - Help the A/E document the Users' expectations, goals, benchmarks and acceptance criteria for judging the project. Include issues such as indoor temperature and humidity limits, air change rates, air flow rates, sound and vibration limits, medical and laboratory gas needs, laboratory equipment needs, light levels and controls, telecommunications needs, audio/visual needs, access control and security needs, medical systems and equipment needs, training needs, etc.
   - Assure the acceptable ranges of performance are identified for each parameter, and to what extent Users will be able to adjust setpoints.
   - Ask detailed questions to obtain specific acceptance criteria for systems and equipment.
   - Emphasize to the User groups and the U-M Design Manager the importance of establishing acceptance criteria early. Describe the high costs of expanding or changing acceptance criteria later.
   - Periodically review the OPR and identify missing, incomplete and incorrectly documented project requirements.

8. Participate in the A/E's development and maintenance of the Basis of Design (BOD) document as it pertains to system performance requirements and commissioned systems. See Design Guideline 2.1.
   - Periodically review meeting minutes, the latest design drawings and specifications, and the room data sheets.
   - Periodically review the BOD for clarity, completeness, and documentation of deviations from the U-M design standards. Verify the BOD reflects the OPR. Identify missing, incomplete and incorrectly documented design decisions.
   - Require the BOD to contain detailed acceptance criteria needed to commission the MEP systems and equipment.

9. If the project is pursuing LEED v4 Certification, perform all design-phase Cx activities required for the Energy and Atmosphere Prerequisite "Fundamental Commissioning and Verification".

10. If the project is pursuing LEED v4 Energy and Atmosphere Credit "Enhanced Commissioning", contact the project's LEED Coordinator for guidance and perform the design-phase Cx activities required for the paths and options the project has selected for this credit.

11. Assist the Design Manager to assure adherence to the U-M sustainability initiatives and to the U-M energy and water conservation measures. See Design Guidelines 3.1 and 3.2.
    - Attend meetings held by the Design Manager to discuss energy conservation measures and to assure U-M sustainability initiatives are met.
    - Recommend that major energy conservation measures such as envelope insulation and fenestration be optimized.
    - Review the A/E's Energy and Water Conservation Reports and Energy Impact Statements for errors and omissions.

12. Recommend technical studies including studies on sound, vibration, smoke purge, effluent dispersion, electrical capacity, and energy and water conservation.
    - Emphasize the study reports will dictate many design issues, so they should be completed ASAP to minimize redesign.

13. Provide the A/E with sample U-M controls drawings and require adherence to U-M's symbology and control drawing conventions. See Design Guideline 230900.

14. Require that control drawings include detailed sequences of operation, setpoints, allowable variance range from set point, alarm descriptions, and equipment operating schedules.

15. Help identify major equipment that must be pre-purchased to maintain project schedule or to improve quality.

16. Provide the design team with "lessons learned" from previous U-M projects.

17. Promote the use of construction mock-ups and other quality assurance techniques, and participate in the evaluation of MEP-related mock-ups.

18. Require that equipment maintenance access spaces, such as coil and tube pull spaces and electrical working spaces be accounted for in the MEP design and blocked out on plan drawings.

19. Assure means are provided for performing MEP maintenance.
    - Verify lifting rails are provided above chillers for hoisting end caps and motors.
    - Verify hoisting exists for replacing large pumps, large motors and other heavy equipment.

- Verify building egress paths and floor loading capacities are adequate for the future replacement of large equipment such as boilers, chillers and substations.

20. Assist with the Owner's review of technical study reports related to mechanical and electrical equipment (noise studies, dispersion studies, smoke evac. studies, etc.) . Review the reports, identify obvious erroneous assumptions or conclusions, and return your comments to the U-M Design Manager.

21. Early in CD design, instruct the A/E to make Section 1.4 of operation and maintenance (O&M) manual Master Specification Section 017823 and Section 1.2 of Commissioning Master Specification Section 019100 project specific.
    - Instruct the A/E to incorporate the sections into the project's Division 01 specifications.
    - Instruct the A/E to not include O&M manual or Cx requirements in other specification sections, but rather just reference these Division 1 specification sections.

22. Review and submit written comments to the A/E on the project's SD, DD and CD design documents during the Owner's reviews of the SD, DD and CD documents. See Design Guideline 2.3.
    - Check that the design appears to satisfy the OPR and BOD requirements that will be verified during construction phase Cx.
    - Identify errors or omissions related to design, codes, the U-M design standards, agreements made during MEP design meetings, and good engineering practice.
    - During the DD and CD reviews, generally verify the comments submitted during previous Owner's reviews were addressed.
    - Verify the documents reflect recommendations contained in the technical studies. This includes recommendations on MEP issues and also on architectural issues such as envelope and fenestration improvements which affect MEP issues such as energy efficiency.
    - During the CD review, verify the documents include complete testing and acceptance criteria (sequences of operation, setpoints, performance minimums, etc.) for the systems and equipment being commissioned. Identify missing information.
    - During the CD review, notify the Design Manager if the documents are not sufficiently complete to issue for bids.

23. Participate in the SD, DD and CD phase cost estimate reconciliation efforts.
    - Spot-check for estimate errors and omissions.
    - Check for duplicate line items and line items assigned to the wrong funding sources.

24. Participate in the SD, DD and CD phase value engineering (VE) efforts.
    - Recommend VE measures.
    - Assure VE measures do not effect compliance with the OPR.
    - Discourage VE measures that significantly reduce OPR compliance, energy or water conservation, reliability or maintainability.
    - Verify that approved MEP VE measures appear in the next phase of design documents.

DESIGN GUIDELINE 4.3.2
MEP DESIGN MANAGEMENT

Scope

This design guideline describes an expanded design-phase commissioning (Cx) process known as mechanical, electrical and plumbing (MEP) design management. It describes the roles and responsibilities the commissioner (a.k.a. Commissioing Authority, or "CxA") will perform. The Commissioning and Plan Review Department will assign commissioner(s) to perform MEP design management on large and complex new building, building addition and building renovation projects, when staff is available.

Related Documents

U-M Design Guidelines:
DG 2.1 - Owner's Project Requirements (OPR) and Basis of Design (BOD)
DG 2.3 - Owner's Review
DG 3.1 - Sustainable Design and LEED® Requirements
DG 3.2 - Energy and Water Conservation
DG 4.2 - Building Envelope
DG 4.3 - Building Commissioning
DG 4.3.1 - Design-Phase Commissioning
DG 230900 - Mechanical Systems Controls

U-M Master Specification Sections:
MS 017823 - Operation and Maintenance Manuals
MS 019100 - Project Commissioning

Reference Documents:
ASHRAE Guideline 0, "The Commissioning Process"
ASHRAE Guideline 0.2, "Commissioning Process for Existing Systems and Assemblies"
ASHRAE Guideline 1.1, "HVAC&R Technical Requirements for the Commissioning Process"
ASHRAE Guideline 1.5, "Commissioning Process for Smoke Control Systems"
ASHRAE Standard 202, "Commissioning Process for Buildings and Systems"
Building Commissioning Association, "The Building Commissioning Handbook"
NIBS Guideline 3, "Building Enclosure Commissioning Process"
USGBC, "LEED® Reference Guide for Green Building Design and Construction"

General

The CxA will perform the following activities during the design phase:

1. Contact the U-M Design Manager, introduce themselves and describe their role. Find out the general schedule of the project and request to be invited to the appropriate MEP meetings.
   - Recommend and establish with the Design Manager the frequency of the MEP meetings at each design stage (SD, DD, and CD), typically two meetings during SD and DD and three

during CD phase. Also schedule a MEP kick-off meeting. Establish who will send out the meeting invitations, normally the Design Manager.

2. Become knowledgeable about the project.
   - Attend at least one presentation by the Architect/Engineer (A/E) to become familiar with the project's scope, schedule, budget, and design intent. At the first meeting attended, introduce yourself and describe your role briefly.
   - Request and review available program documents to learn about the project, including:
     - Number of floors, square footage of each floor, extent of new building or addition work, extent of renovation work, division of space by function (clinical, laboratory, classroom, office, support space), division of space among departments, etc.
     - Connections to and interactions with surrounding buildings, including any related renovations in surrounding buildings.
     - Site requirements including proposed grade, roadway and utility changes.
     - Schedule for the schematic design (SD), design development (DD) and construction documents (CD) design phases, and for project bidding and award.

3. Promote adherence to the U-M Design Guidelines, Master Specifications, Standard Details, Preferred Manufacturers Lists and Design Deliverables list. Require that deviations from these standards be approved by the Design Manager and that deviations be documented in memos, emails or meeting minutes, and the OPR/BOD.

4. As early in design as possible, promote the incorporation of U-M sustainability goals. See Design Guidelines 3.1 and 3.2.
   - Explain these Design Guidelines in detail to the A/E and promote the early identification of energy conservation measures.
   - Promote optimization of the building's aspect ratios, siting, glass orientation, glass area, glass type, exterior shading, daylighting features, envelope insulation, air and vapor barriers, etc.

5. Conduct an MEP design management kick-off meeting.
   - The MEP design management kick-off meeting is typically held as part of the first SD MEP meeting.
   - Explain the purpose for and format of the MEP design management process.
   - Use the "MEP Meeting Master Kickoff Notes", found on the CPR drive, to conduct the first part of the meeting.
     - Revise the "Notes" to be project specific and pass them out at the meeting. Review/explain the items in the notes.
     - The level of review needed will depend upon how much work the A/E has done previously at U-M and whether they have been through a managed MEP process. Be cautious not to over-assume the A/E knows something.
     - Require the A/E to make the "Notes" an attachment to the meeting minutes.
   - Require the A/E communicate with Plant Operations, Department of Public Safety and Security (DPS), Occupational Safety and Environmental Health (OSEH), UH Facilities

Planning and Development (FP&D), and other U-M personnel through the CxA and Design Manager.

6. Manage the MEP design meetings.
   - Develop the agenda for each meeting to assure all MEP topics are discussed in detail. Obtain input from the A/E and other team members. Use the outline agenda "MEP Meeting Master Agenda", found on the CPR drive, as a starting point, revise to make project and meeting specific.
   - Inform the Design Manager of the appropriate U-M personnel to invite.
   - Require the A/E distribute their design documents in advance when possible.
   - Require the A/E to present their design including concepts, drawings and specifications.
   - Lead a detailed discussion on the acceptability of the current concept for each system.
   - Require compliance with codes and U-M design standards.
   - Require the inclusion of Cx requirements in the design documents.
   - Identify incomplete design issues and remind the A/E of the Design Deliverables required for design completeness at each phase completion. In particular in SD and DD phases, items in the Design Deliverables list such as one-line diagrams should be presented at the MEP meetings for review and discussion. Require these be refined for subsequent meetings.
   - Require the A/E publish detailed meeting minutes for your review within two weeks of each meeting.
   - Require the meeting minutes include an action items list at the end.

7. Manage the A/E's development and maintenance of the Owner's Project Requirements (OPR) document as it pertains to system performance requirements and commissioned systems. See Design Guideline 2.1.
   - Review room data sheets produced by the A/E, Hospital Planner, Laboratory Planner, etc. for key project requirements that should be included in the OPR.
   - Help the A/E document the Users' expectations, goals, benchmarks and acceptance criteria for judging the project. Include issues such as indoor temperature and humidity limits, air change rates, air flow rates, sound and vibration limits, medical and laboratory gas needs, laboratory equipment needs, light levels and controls, telecommunications needs, audio/visual needs, access control and security needs, medical systems and equipment needs, training needs, etc.
   - Assure the acceptable ranges of performance are identified for each parameter, and to what extent Users will be able to adjust setpoints.
   - Ask detailed questions to obtain specific acceptance criteria for systems and equipment.
   - Emphasize to the User groups the importance of establishing acceptance criteria early. Describe the high costs of expanding or changing acceptance criteria later.
   - Periodically review the OPR and identify missing, incomplete and incorrectly documented project requirements.

8. Manage the A/E's development and maintenance of the Basis of Design (BOD) document as it pertains to system performance requirements and commissioned systems. See Design Guideline 2.1.

- Periodically review meeting minutes, the latest design drawings and specifications, and the room data sheets.
- Periodically review the BOD for clarity, completeness, and documentation of deviations from the U-M design standards. Verify the BOD reflects the OPR. Identify missing, incomplete and incorrectly documented design decisions.
- Require the BOD contain detailed sequences of operation and acceptance criteria needed to commission the MEP systems and equipment.

9. If the project is pursuing LEED v4 Certification, perform all design-phase Cx activities required for the Energy and Atmosphere Prerequisite "Fundamental Commissioning and Verification".

10. If the project is pursuing LEED v4 Energy and Atmosphere Credit "Enhanced Commissioning", contact the project's LEED Coordinator for guidance and perform the design-phase Cx activities required for the paths and options the project has selected for this credit.

11. Assist the Design Manager to assure adherence to the U-M sustainability initiatives and energy and water conservation measures. See Design Guidelines 3.1 and 3.2.
    - Lead meetings, along with the Design Manager to discuss energy conservation measures and to assure U-M sustainability initiatives are met.
    - Recommend that major energy conservation measures such as envelope insulation and fenestration be optimized.
    - Review the A/E's Energy and Water Conservation Reports and Energy Impact Statements for errors and omissions.

12. Recommend technical studies including studies on sound, vibration, smoke purge, effluent dispersion, electrical capacity, and energy and water conservation.
    - Emphasize the study reports will dictate many design issues, so they should be completed ASAP to minimize redesign.
    - Assist with reviewing the consultant proposals and getting the studies under contract.

13. Coordinate with plant operations, DPSS, OSEH, UH FP&D, and other U-M personnel for their input on MEP issues. Challenge any scope increase requests from these organizations if they appear excessive, especially if they exceed code or their simple payback is excessive.

14. Provide the A/E with sample U-M controls drawings and require adherence to U-M's symbology and control drawing conventions. See Design Guideline 230900.

15. Require that control drawings include detailed sequences of operation, setpoints, allowable variance range from set point, alarm descriptions, and equipment operating schedules.

16. Help identify major equipment that must be pre-purchased to maintain project schedule or to improve quality. Participate in the development of the pre-purchase specifications and the evaluation of the pre-purchase bids.

17. Provide the design team with “lessons learned” from previous U-M projects.

18. Promote the use of construction mock-ups and other quality assurance techniques, and participate in the evaluation of MEP-related mock-ups.

19. Require that equipment maintenance access spaces, such as coil and tube pull spaces and electrical working spaces be accounted for in the MEP design and blocked out on plan drawings.

20. Assure means are provided for performing MEP maintenance.
    - Verify lifting rails are provided above chillers for hoisting end caps and motors.
    - Verify hoisting exists for replacing large pumps, large motors and other heavy equipment.
    - Verify building egress paths and floor loading capacities are adequate for the future replacement of large equipment such as boilers, chillers and substations.

21. Serve as the point of contact for the Owner's review of the technical study reports related to mechanical and electrical equipment (noise studies, dispersion studies, smoke evac. studies, etc.).
    - Review the reports and identify obvious erroneous assumptions or conclusions.
    - Distribute the reports for review by the appropriate U-M departments.
    - Consolidate all comments and return the comments to the Design Manager.

22. Early in CD design, instruct the A/E to make Section 1.4 of operation and maintenance (O&M) manual Master Specification Section 017823 and Section 1.2 of the appropriate Cx Master Specification Section 019100 project specific.
    - Instruct the A/E to incorporate the sections into the project’s Division 01 specifications.
    - Instruct the A/E to not include O&M manual or Cx requirements in other specification sections, but rather just reference these Division 1 specification sections.

23. Review and submit written comments to the A/E on the project’s SD, DD and CD design documents during the Owner’s reviews of the SD, DD and CD documents. See Design Guideline 2.3.
    - Check that the design appears to satisfy the OPR and BOD requirements that will be verified during construction phase Cx.
    - Identify errors or omissions related to design, codes, the U-M design standards, agreements made during MEP design meetings, and good engineering practice.
    - During the DD and CD reviews, generally verify the comments submitted during previous Owner’s reviews were addressed.
    - Verify the documents reflect recommendations contained in the technical studies. This includes recommendations on MEP issues and also on architectural issues such as envelope and fenestration improvements which affect MEP issues such as energy efficiency.
    - During the CD review, verify the documents include complete testing and acceptance criteria (sequences of operation, setpoints, performance minimums, etc.) for the systems and equipment being commissioned. Identify missing information.

- During the CD review, notify the Design Manager if the documents are not sufficiently complete to issue for bids.

24. Assist the Design Manager by assigning action codes to the MEP-related SD, DD and CD phase Owner's review comments.
    - Resolve conflicting review comments related to the MEP design.
    - Inform the Design Manager of special requests from Users and other U-M reviewers that are not cost effective or that will result in scope creep.
    - Indicate which comments should and which ones should not be incorporated.

25. Participate in the SD, DD and CD phase cost estimate reconciliation efforts.
    - Spot-check for estimate errors and omissions.
    - Check for line items duplicated in multiple sections and line items assigned to the wrong funding sources.

26. Participate in the SD, DD and CD phase value engineering (VE) efforts.
    - Recommend VE measures.
    - Assure VE measures do not effect compliance with the OPR.
    - Discourage VE measures that significantly reduce OPR compliance, energy or water conservation, reliability or maintainability.
    - Verify that approved MEP VE measures appear in the next phase of design documents.

27. Participate in the MEP contractor bid evaluations and contractor pre-award interviews critical to successfully commissioned projects.

28. Hold a meeting with the construction CxA and help the construction-phase CxA become familiar with critical OPR and BOD requirements.

DESIGN GUIDELINE 4.3.3
FULL CONSTRUCTION-PHASE COMMISSIONING PROCEDURE

Scope

This procedure defines the scope of work for the Commissioning Authority (CxA) when a project is identified as requiring full construction-phase commissioning (Cx).

Related Sections

U-M Design Guideline Sections:
DG 4.3 – Building Commissioning
DG 4.3.4 - Reduced Scope Construction-Phase Commissioning Procedure
DG 4.3.5 – Commissioning Plan Procedure
DG 4.3.6 – General Commissioning Procedures

U-M Master Specification Sections:
MS 017823 – Operation and Maintenance Manuals
MS 019100 – Project Commissioning

Reference Documents

ASHRAE Guideline 0, "The Commissioning Process"
ASHRAE Guideline 0.2, "Commissioning Process for Existing Systems and Assemblies"
ASHRAE Guideline 1.1, "HVAC&R Technical Requirements for the Commissioning Process"
ASHRAE Guideline 1.5, "Commissioning Process for Smoke Control Systems"
ASHRAE Standard 202, "Commissioning Process for Buildings and Systems"
Building Commissioning Association, "The Building Commissioning Handbook"
USGBC, "LEED® v4 Reference Guide for Green Building Design and Construction"

General

All project systems and equipment shall be commissioned, including but not limited to the systems and equipment listed in the project's commissioning specification and MS 019100 – Full Project Commissioning.

Perform the following construction-phase Cx activities. Reference the Related Sections above for additional requirements.

1. Develop a project-specific Cx plan by utilizing the U-M "Generic Sample Commissioning Plan (Manual)". All activities and forms described in this sample plan shall be implemented for the Cx process.

2. Conduct an on-site Cx kick-off meeting.

- Require each contractor's lead field person and Cx lead person to attend.
- Clarify the requirements and benefits of the Cx process.
- Explain the Cx plan process.
- Explain the O&M manual requirements.
- Write and distribute Cx meeting minutes.

3. Issue the project-specific Cx plan to the Construction Manager (CM) or General Contractor (GC) for them to complete and maintain.

4. Develop the Cx forms for contractor completion and insertion into the Cx plan.
   - The Cx forms include but are not limited to pre-installation, pre-start (or check/test/start) and functional test check sheets.
   - All major equipment shall have pre-installation and pre-start check sheets.
   - Review equipment installation/startup manuals for equipment being commissioned and incorporate manufacturers' requirements into the pre-start and functional test check sheets.
   - Distribute the forms in advance of the Cx activities.
   - Require each contractor to complete and insert into the Cx plan the portion of each form that relates to their work.

5. Develop project specific Cx status check sheets. See the example in the U-M Generic Sample Commissioning Plan (Manual).

6. Conduct periodic on-site Cx meetings (typically one every month at the beginning, increasing to one every week for the last third of the project).
   - Require CM or GC and contractor participation in the Cx meetings. Invite the U-M Project Manager to the Cx Meetings.
   - The purpose of Cx meetings is to track progress toward successfully commissioning each system and to resolve issues that could prevent successful commissioning. Utilize the Cx status check sheets to track progress.
   - Periodically review the draft O&M manual and verify O&M information is being added.
   - Write and distribute Cx meeting minutes.

7. Assess the impact of commissioning each system or piece of equipment on the project schedule.
   - Develop a logical "order and timing" for each Cx event.
   - Facilitate the CM's or GC's integration of Cx events into the project's CPM schedule.
   - When a system or equipment is being started early to facilitate construction, remind the CM or GC that the early-started systems and equipment shall be commissioned once before startup and a second time before final acceptance.

8. Participate in the contractor submittal review process and send comments to the A/E.
   - Require the CM or GC to forward contractor submittals simultaneously to both you (the CxA) and the A/E for a parallel review.
     - Review the submittals which are critical to the Cx process.

    - Focus on identifying issues that will prevent successful commissioning. Typical examples include performance data that does not meet project requirements, alarm contacts not provided for DDC, unclear sequences of operation, inadequate service and electrical clearances.
    - Focus on compliance with plans and specifications and on issues that are often overlooked. Typical examples include un-approved manufacturers (including motors provided with equipment), sub-components (such as motors and valves) not in compliance with related specification sections, etc.
  - Require the A/E to incorporate Cx comments with their comments or contact you to discuss. Copy the U-M Project Manager when submitting comments to the A/E. Notify the U-M Project Manager if your comments were not incorporated.
  - Obtain a set of the A/E reviewed and stamped submittals or arrange for the storage of a set at the project site.

9. Identify equipment or systems (including pre-purchased equipment) requiring factory testing, manufacturer startup or other special documentation.
   - Verify requirements are met and documentation is inserted into the Cx plan.
   - When the CxA will witness factory tests, the project will pay for travel-related expenses.
   - Review equipment test reports or similar reports significant to the commissioning effort.
   - Participate in the resolution of issues brought to light as a result of such testing or reports.
   - Document the final resolutions in the Cx manual.

10. Document any quality control deficiencies found during the Cx process.
    - Maintain an Open Issues Log or equivalent and frequently provide a copy to the CM/GC.
    - Request the CM or GC incorporate Cx open issues into the project's open issues list.

11. Generate Requests For Information (RFIs) to the Architect/Engineer regarding questions about design intent or functionality issues of systems to be commissioned, and follow up on closure of all such issues.

12. Participate in the Coordination Drawing Process.
    - Attend a minimum of two contractor coordination drawing meetings. Monitor the process to verify reasonable coordination is occurring between trades. Report on contractor progress.
    - Assist contractors in identifying required equipment maintenance access and require maintenance access spaces be delineated on the coordination drawings.

13. Monitor the proper protection from dirt, debris, and water, ducts, piping, air handlers, VFDs and similar equipment.

14. Validate proper flushing, cleaning and water treatment of plumbing and hydronic piping systems.
    - Review the specification requirements for flushing and cleaning, disinfecting and chemical treatment. Validate contractor compliance throughout construction.

- Review and approve flushing and cleaning plans.
- Conduct a chemical pre-treatment conference with the contractors to verify treatment procedures, discuss coordination with existing piping networks, and to coordinate treatment activities with the construction schedule. Document the meeting in the Commissioning Report.
    - Ann Arbor central campus projects including Housing: Because the University's water treatment service company will become responsible for water treatment at project completion, invite them to the conference by contacting the U-M water treatment coordinator (Nicholas Vanderkolk (nevander@umich.edu)). If they or others bring up concerns during the meeting, address through normal commissioning protocols. (For U-M Hospital and Athletics projects and other U-M campuses, determine the equivalent University representative(s) to invite in consultation with the U-M Project Manager.)
- Witness flushing and cleaning of these systems.
- Assure chemical testing verifies proper rinse of the cleaned systems.
- Require that the initial water treatment of each hydronic system occurs immediately after flushing and cleaning is completed.
- Obtain reports verifying water treatment was maintained throughout construction and insert them in the Cx plan.
- Conduct a final chemical treatment turn-over meeting and insert the final validation report in the Cx plan. Document the meeting in the Commissioning Report.
    - Invite the same University representatives as invited to the pre-treatment conference; address any concerns that arise through normal commissioning protocols.

15. Participate in contractor duct leak testing.
    - Review and approve duct leak testing plans.
    - Verify a sampling of ductwork for cleanliness.
    - Witness duct leak tests. Listen and feel for air leaks.
    - Witness follow-up leak tests.

16. Participate in and document the initial energization of major power distribution system equipment.
    - Review the final short circuit and protective device coordination studies provided by the A/E. Identify secondary fuse sizes, breaker settings and automatic transfer switch settings that are missing from the study.
    - The electrical testing agency will document in test reports the fuse sizes, breaker settings and ATS settings installed in most of the equipment. Compare them with the A/E's report and identify discrepancies. Verify with contractor help the fuse sizes and equipment settings not included in test reports to achieve 100 percent verification.
    - Verify electrical equipment and cables have passed the specified electrical testing.
    - Verify electrical equipment is labeled and contains arc flash hazard warning labels.
    - Witness the initial energizations of major electrical equipment.

17. Participate in and document the startup of major equipment.
    - When required by specification, assure a manufacturer's representative starts up the equipment.
    - Test all modes and sequences of operation, all interlocks and conditional control responses, and all specified responses to normal, abnormal, and emergency conditions under all operating conditions.
    - Verify sound, vibration and other specified tests are performed after startup.
    - Collect the check-test-start sheets for inclusion in the Cx plan.

18. Participate in the functional testing and commissioning of each system.
    - Participate in 100 percent of the functional testing of major equipment.
    - Functionally test 100 percent of terminal units that are controlled in any way by occupancy sensors.
    - Functionally test 100 percent of terminal units or zones that provide temperature, humidity, pressure, or similar control outside of what would be the design criteria for a typical office, e.g. those serving museum, special storage, or similar spaces.
    - Functionally test 100 percent of terminal units serving any space designated as a lab.
    - Otherwise, randomly sample 20% minimum of fan coil units, VAV boxes, chilled beams, plumbing fixtures, lighting occupancy sensors, and similar high unit count equipment. If significant issues are found, random sample in additional increments of 10% until no significant issues are found.
    - Verify each system and its components are installed per specification and manufacturer's requirements and with adequate maintenance accessibility.
    - Verify the testing of all system functions. Include all modes and sequences of operation, all interlocks and conditional control responses, and all specified responses to normal, abnormal, and emergency conditions under all operating conditions.
    - Verify all system controls, safeties and alarms.
    - Verify systems and components provide the OPR and BOD requirements.
    - Document all issues revealed as a result of Cx.
    - Verify all documented issues are resolved.
    - Advise the U-M Project Manager and A/E of design problems.
    - Document separately issues that cannot be corrected within the project scope.

19. Validate the test and balance (TAB) procedures and review the TAB report.
    - Conduct air and water balance "pre balance" conferences.
    - Verify air and water balance procedures proposed by the TAB contractor are appropriate for the project.
    - Monitor air and water balance activities.
    - Review air and water balance reports.
    - Document incorrectly balanced systems, incomplete balancing, insufficient balancing data, and system deficiencies identified as a result of the balance work.
    - Verify any incomplete TAB work is completed and any system deficiencies identified as a result of the TAB activities are rectified.

20. Commissioning of the following systems shall be limited to tracking that the required AHJs inspect and document their approval of the system. Correspond with the U-M Project Manager to assure these activities occur. Insert approval documentation into the Cx Plan.
    - Fire alarm systems: State of Michigan BFS, U-M Fire Marshal, U-M Code Inspection.
        - The CxA shall verify and separately document, in advance of the AHJ's inspection, that any mechanical equipment controlled by the fire alarm system (directly or indirectly) operates per the intended sequence of operation. Examples: Smoke or fire/smoke dampers in AHUs and in ducts and smoke control zones, fans, actuated doors or door release mechanisms, stairway or smoke zone pressurization systems, atrium smoke control systems, etc..
    - Elevators: State of Michigan Elevator Inspector, U-M Plant Elevator Shop.
    - Emergency responder radio and cell phone signal enhancement systems: U-M ITSComm Engineer, U-M Code Inspection.

21. Additional requirements for certain systems: Verify the contractor demonstrates all modes of system operation including User programming of system functions to the appropriate User representative(s). Determine who the appropriate User representatives are in conjunction with the U-M Project Manager:
    - Security Systems: Commission similar to any system, however assure the U-M Division of Public Safety and Security along with the appropriate user representative is involved
    - Access Control Systems: Commission similar to any system, however assure the appropriate user representative is involved.
    - Audio/visual, electronic messaging, room scheduler and similar electronic systems: Commission similar to any system but arrange for the User representative(s) to participate in the functional testing.
    - Cage and rack washers, sterilizers, and similar specialized User equipment provided by the project: Arrange for and attend a contractor demonstration of all modes of system operation and User programming functions presented to the appropriate User representatives. Once the User agrees the equipment functions per specification, document that fact in a report sent to the User and the U-M Project Manager. Insert such reports in the Cx Plan.

22. On projects providing a new or replacing or expanding an existing emergency power distribution system, perform a "pull the plug" test of the system.
    - Arrange for a test in which normal primary power to the building is shut off.
        - U-M Inspection will verify engine-generator and/or battery systems start all emergency loads in their required times, and these loads operate as intended.
        - The CxA shall verify engine-generator and/or battery systems start all legally required standby loads (e.g. smoke pressurization fans) and optional standby loads in their required times, and these loads operate as intended.
        - Verify no normal loads receive engine-generator or battery power.
        - Verify all "loss of normal power", "transfer to generator power" and similar alarms function as intended.
    - Arrange for restoration of normal primary power to the building.

- Verify emergency and standby loads return to normal power and operate as intended.
- Verify all normal loads resume operation as intended.
- Verify engine-generator and/or battery systems return to standby mode.
- Verify all alarms return to normal.

23. Generate and issue periodic Cx Reports.
    - Identify systems that do not meet the OPR or BOD.
    - Document the Cx activities performed, problems identified, and Cx activities still outstanding. Include any quality control deficiencies found during the Cx process.
        - Identify the responsible party assigned to correct the problem or deficiency.
        - Distribute the report to the contractors, the U-M Project Manager, and the A/E.
    - Immediately before Substantial Completion, provide the U-M Project Manager with an overall report documenting all Cx activities performed, problems identified and Cx still outstanding. Clearly identify any OPR or BOD requirements not met.
    - If Cx activities will occur after Substantial Completion, issue an updated Cx report when all Cx activities are complete.

24. Review and approve the O&M manuals.
    - Require that O&M manuals be submitted to the CxA using the project's submittal tracking process.
    - Review for compliance to Specification 017823.
    - Verify manual is logically organized, indexed and labeled.
    - Verify manual is complete and project specific.
    - When manual is approved, instruct CM or GC to produce three more copies.
    - Transmit all four copies to the AEC Facility Information Center (FIC).
    - Insert the transmittal in the Cx plan.

25. Manage and conduct Owner training sessions.
    - Verify the contractor organizes the vendor training required by the specifications.
    - Determine attendance requirements via communication with the Owner's Plant Operations Training Coordinator.
    - Propose training schedules for Owner approval.
    - Notify Owner's personnel of each training session and track their attendance through completion.
    - Develop an outline style training document generally describing each major system, areas served etc. that will assist maintenance personnel in becoming familiar with each system.
        - Provide such training in conjunction with equipment-specific training, where appropriate.
    - If a vendor training session does not meet the specification requirements, require the vendor to provide the training session again.
    - Document each training session (trainer, attendance, date, time, location, and brief report).

26. If the project is pursuing LEED, provide any commissioning activities required by the "LEED v4 Reference Guide for Green Building Design and Construction" to support the LEED effort.

27. If the project is pursuing LEED v4 Energy and Atmosphere Credit "Enhanced Commissioning", contact the project's LEED Coordinator for guidance. Produce a systems manual and perform the other construction-phase Cx activities required for the paths and options the project has selected for this credit.

28. If the project is pursuing LEED v4 Indoor Environmental Quality Credit "Construction Indoor Air Quality Management Plan", assist the U-M Project Manager with this effort.
    - Assist with developing an indoor air quality (IAQ) management plan that assures ductwork and air handling equipment are protected from dust and debris throughout construction and temporary use.

29. Perform Cx closeout.
    - Review and approve the final Cx plan submittal.
    - Generate and issue a Final Cx Report.
    - Verify that all project Cx requirements have been met.

DESIGN GUIDELINES 4.3.4
REDUCED SCOPE CONSTRUCTION-PHASE COMMISSIONING PROCEDURE

Scope

This procedure defines the scope of work for the Commissioning Authority (CxA) when a project is identified as requiring reduced scope construction-phase commissioning (Cx). Such projects are expected to require a low number of commissioning man-hours, often less than 50, because they involve a small number of systems or equipment needing commissioning.

Related Sections

U-M Design Guideline Sections:
DG 4.3 – Building Commissioning
DG 4.3.3 – Full Construction-Phase Commissioning Procedure
DG 4.3.5 – Commissioning Plan Procedure
DG 4.3.6 – General Commissioning Procedures

U-M Master Specification Sections:
MS 017823 – Operation and Maintenance Manuals
MS 019100 – Project Commissioning

General

All project systems and equipment shall be commissioned, including but not limited to the systems and equipment listed in the project's commissioning specification and MS 019100 – Project Commissioning.

Perform the following construction-phase Cx activities. Refer to Design Guideline 4.3.3 for a thorough description of each Cx activity.

Core Cx Activities

Develop pre-start check sheets and functional test Cx forms for contractor completion and return.

- Review installation manuals and incorporate manufacturers' requirements into the forms.
- Distribute the forms to the General Contractor/Construction Manager for distribution to contractors in advance of the Cx activities.
- Identify equipment requiring factory testing or manufacturer startup and assure it occurs.
- Collect factory test, start-up and field services reports from the contractors.
- Require each contractor to complete the portion of each form that relates to their work.

Conduct at least two Cx meetings; an introductory meeting at the start of construction and a second meeting during construction. Conduct the meetings as part of the project's regular construction meetings. Add more meetings when required due to project complexity.

- Introduce yourself to the contractors and describe the Cx requirements for the project.
- Indicate that all Cx issues discussed at the meetings shall be documented in the construction meeting minutes.
- Indicate the CxA is to be copied on all construction meeting minutes.
- Indicate what items are required in the Operation and Maintenance (O&M) manual and when the O&M manual is to be submitted to the CxA for approval.

Witness 100 percent of the functional testing of systems and equipment requiring Cx.

- Document the Cx activities performed, the issues identified, and the Cx still outstanding.
- When special tests are required, verify the tests are performed. Collect the documentation.
- Establish expected "ready for re-commissioning" dates. Verify contractor readiness prior to re-commissioning identified issues. Return and verify all identified issues have been resolved.

Additional Cx Activities

In addition to the core Cx activities, perform the following activities as applicable to the project. When Cx is being performed by an External Cx Firm, only the additional activities identified in the project's Request for Proposal are required.

1. Review contractor submittals which are critical to the Cx process and submit review comments to the A/E.

2. Participate in and document the initial energization of major power distribution system equipment.

3. Participate in and document the startup of equipment.

4. Validate proper flushing, cleaning and water treatment of plumbing and hydronic piping systems. Collect all water treatment reports.

5. Witness and document a "pull the plug" test of new or renovated power distribution systems.

6. Validate the test and balance (TAB) procedures and review the TAB report.

7. Review and approve the O&M manuals.

8. Manage and conduct Owner training.

Cx Reports and Closeout

Verify all project Cx requirements have been met.

After each functional test, email to the U-M Project Manager a summary report documenting the Cx activities performed, problems identified, and Cx activities still outstanding. Include any quality control deficiencies found during the Cx process.

Immediately before Substantial Completion, provide the U-M Project Manager with an overall report documenting all Cx activities performed, problems identified and Cx still outstanding. Clearly identify any OPR or BOD requirements not met. Include completed Cx forms and documents related to the Cx effort. These compiled documents serve as the commissioning plan. Provide this plan as a scanned PDF.

If Cx activities will occur after Substantial Completion, issue an updated commissioning plan when all Cx activities are complete.

DESIGN GUIDELINE 4.3.5
COMMISSIONING PLAN PROCEDURE

Scope

This procedure defines the process for developing and maintaining a commissioning (Cx) Plan. The Cx Plan is the document that outlines the project specific requirements and responsibilities of the Cx process. The Cx Plan also stores all validating documentation related to the Cx process.

The Commissioning Authority (CxA) is responsible for developing, managing, and executing the Cx Plan. The CxA is also responsible for populating it with the required documentation, with the assistance of the contractors.

Related Documents

U-M Design Guidelines:
DG 4.3 - Building Commissioning
DG 4.3.3 - Full Construction-Phase Commissioning Procedure
DG 4.3.4 - Reduced Scope Construction-Phase Commissioning Procedure
DG 4.3.6 – General Commissioning Procedures

U-M Master Specification Sections:
MS 017823 – Operation and Maintenance Manuals
MS 019100 – Project Commissioning

General

Develop a project specific Cx Plan. Produce one copy for the Construction Manager (CM) or General Contractor (GC), and a second copy for yourself. Set up the Cx plan in 3-ring binder(s). Use the U-M "Generic Sample Commissioning Plan" as a template. The generic sample Cx plan is available at http://www.umaec.umich.edu/wp-content/uploads/2013/08/Sample-Cx-Plan-Master.pdf

1. Include all the processes, procedures and documents described in the U-M generic sample plan that are applicable to the project.
2. Produce the documents and forms described in the U-M Generic Sample Commissioning Plan template, e.g. the OPR/BOD summary, the Cx Status Check Sheets, the project specific list of equipment and systems to be commissioned, the prestart and functional test forms, etc.
3. Issue one copy of the Cx Plan to the CM or GC at an early commissioning meeting, preferably at the Cx kick-off meeting.
   - Explain the plan's organization and intent.
   - Review the commissioning process and procedures, using Section 1.4 of the Plan template as a guide.
   - Review the documentation to be provided by the various Cx Team members, and establish a process for the collection of that documentation.

- Explain that you will issue blank Cx forms for completion and insertion into the plan.
- Require each contractor to fill out the portions of the forms that relate to their work, sign them and submit them along with copies to the CxA, to the CM or GC for filing in the Plan.

4. Execute commissioning in compliance with the project specific Cx Plan. Collect the forms, reports, and other required documentation as it is turned in or generated, and file it in the respective Tab 2 or Tab 3 section.

5. When Cx has been completed, review and approve the final Cx Plan. Verify that all project Cx requirements have been met and documented.

6. At the end of Cx, scan the entire contents of the plan as a PDF. Prepare a transmittal memo and transmit the scanned copy of the Cx plan (including a final Cx report) to the U-M Project Manager and to the AEC Facilities Information Center (FIC) for archiving.

DESIGN GUIDELINE 4.3.6
GENERAL COMMISSIONING PROCEDURES

Scope

This procedure covers the minimum commissioning requirements for:

- Conducting commissioning (Cx) meetings
- Providing Cx reports
- Obtaining operation and maintenance (O&M) manuals for the Owner
- Managing and conducting Owner training

Related Documents

U-M Design Guidelines:
DG 4.3 - Building Commissioning
DG 4.3.3 - Full Construction-Phase Commissioning Procedure
DG 4.3.4 - Reduced Scope Construction-Phase Commissioning Procedure
DG 4.3.5 – Commissioning Plan Procedure

U-M Master Specification Sections:
MS 017823 – Operation and Maintenance Manuals
MS 019100 – Project Commissioning

Commissioning Meetings

Soon after becoming assigned or hired as the project's Commissioning Authority (CxA), contact the U-M Project Manager and schedule a Cx kick-off meeting.

- On large projects, the Cx meetings shall be separate from but perhaps directly after the Project Manager's construction meetings.
- On reduced scope construction-phase Cx projects, the Cx meetings should be held as part of the regular project construction meetings.

Commissioning meetings should have the entire Cx Team in attendance: U-M Project Manager, Construction Manager (CM) or General Contractor (GC), and the applicable contractors. Invite U-M trades (such as U-M Plant DDC Shop) that are performing work on the project when their responsibilities will be discussed at the meeting.

Take attendance at the Cx meetings.

At the Cx kick-off meeting, give an overview of the Cx process including reviewing the Cx specification and all the requirements outlined in the Cx Plan. Establish the reoccurrence of the Cx meetings.

At subsequent meetings, discuss the current status of each system being commissioned. Utilize the project's Cx Status Check Sheet as a guide.

- Discuss design, construction, and equipment issues affecting Cx.
- Discuss the Cx schedule. Identify issues that may prevent completion of Cx before Substantial Completion.
- Establish clear action items, dates, and responsible parties.
- Periodically review the progress of assembling the project O&M.
- Finalize Cx event dates, e.g. equipment start-ups, functional testing, owner training sessions, etc.
- Generally limit discussion to resolving issues that will allow each system to progress to functional testing and ultimately to final CxA sign-off.
- For design and construction issues that impact Cx and require lengthy discussion, schedule separate meetings inviting only those parties that need to be directly involved in the resolution.

Within a few days after the meeting, issue meeting minutes to the Cx team.

- List the Cx team and identify who attended the meeting.
- Organize the minutes to match the meeting agenda.
- Summarize the meeting discussions
- Include an action items list with responsible party and completion date.

Alert the U-M Project Manager of critical issues that are preventing the execution of the Cx process in a timely manner or that could prevent successful final commissioning and sign-off; do not rely entirely on meeting minutes for this purpose.

Commissioning Reports

Prepare an electronic Cx report and update it periodically. See the last pages of the Design Guideline for a suggested Cx report format (for interim and final reports). Other formats are acceptable if they present the information in a similar manner and contain the same information.

Each Cx report shall include the following:

- Report Data
    - Sequential report number and date of report
    - Building Name
    - Project Name
    - U-M Project Number
    - Report author and distribution list
- Executive Summary - Each report shall begin with an executive summary that indicates, since the last report issued:
    - The functional tests that have occurred
    - Major issues discovered
    - Any new or on-going impediments to commissioning

    - the overall Cx progress
- Issues Discovered - This shall be followed by a updated list of all issues discovered during the Cx process

Quality control issues (code violations, material substitutions, poor workmanship, damage, etc.) that do not affect system function, functional testing, or that are not a significant concern or impediment to the Cx process should be included in the project's QC log. If no such QC log is available and the issue is significant, include it in the Cx report.

If a significant issue is found that exceeds the project scope, document it and discuss with the U-M Project Manager (resolution may or may not occur as part of the project).

Each issue should be assigned a unique number to allow ease of tracking. In the sample report format presented at the end of this Design Guideline, each issue is assigned a number consisting of the system tab number followed by a sequential number.

Periodically transmit an electronic copy of the Cx report to the Cx team including the U-M Project Manager and any others identified with an action item. **Issue a report at least monthly.**

Final Cx Report

Immediately before Substantial Completion issue a draft final commissioning report. Label the report "Final" and "Preliminary and Advisory". If Cx activities will occur after Substantial Completion, label the report "Provisional Final Report" (and "Preliminary and Advisory") and note the Cx activities that make the report provisional. In either case, provide an executive summary (same as for routine reports), and group remaining open issues in the report as follows:

- Cx Activities Still Outstanding. Identify incomplete Cx and its reasons (e.g. system not complete, addition to scope, etc.).
- Open issues directly related to the scope of the project (e.g. unresolved Contractor deficiencies, vendor equipment deficiencies, OPR/BOD requirements not met due to design deficiencies or other reasons (explain reasons), etc.).
- Issues beyond the scope of the project. Provide recommendations on how to resolve the issues when possible.
- Recommendations and Lessons Learned. Summarize any Cx recommendations and lessons learned.
- This shall be followed by a updated list of all the issues discovered during the Cx process.

Transmit an electronic copy of the final report to the Cx team, including the U-M Project Manager, for review and comment. Require comments within one week.

After the final report has been reviewed, revise the report to reflect any comments received as appropriate. Remove the "Preliminary and Advisory". Insert a copy of the report into the Cx

Plan. Electronically transmit the Cx Plan along with the final report (separated from the Cx Plan) to the following:

- U-M Project Manager
- Project's Commissioning Team
- U-M Plant Engineering (UPE): Ron Crawford <rfc@umich.edu>
- Project's Facility Manager
- Electronically transmit the Cx Plan to the AEC Facilities Information Center for archiving, retain a copy for the CxA's record.

If the report is a Provisional Final Report, issue a Final Report when Cx is finished, following the same procedure above.

Operation and Maintenance Manuals

During construction, assure that the contractors and the CM or GC assemble the O&M manuals as construction progresses.

- At the first (or a very early) commissioning meeting, thoroughly explain the O&M manual requirements to the contractors. Review the requirements of Specification 017823 and establish how the O&M sections provided by various contractors will be collated into one uniform manual. Instruct the CM or GC to take ownership of this coordination.
- Notify contractors that a draft copy of their O&M manual will be required in the near future, and agree upon a reasonable date for submittal of it. This draft copy should consist of the labeled binders with a complete table of contents and the appropriate binder tabs.
- Review the draft O&M manual when received. Verify the binders and table of contents are in compliance with Specification 017823, and the table of contents covers all the equipment for which O&M information must be submitted. Pay special attention to easily missed systems provided by minor subcontractors, such as automatic over-head doors. Identify required changes in arrangement and missed equipment which must be added. Note where additional table of contents entries may need to be added later as construction progresses. Remind contractors that O&M materials shall include installation manuals, and these materials should be collected throughout construction, starting with the submittal process. Remind contractors that manufacturers' sales literature and similar promotional materials are not to be included.
- Throughout construction, remind contractors and the CM or GC to gather operation and maintenance documentation and enter this data into the binders. Periodically instruct contractors to bring the binders to the next commissioning meeting for interim review.
- Remind contractors that four Owner-reviewed and approved O&M manuals must be submitted at least two weeks prior to Owner training. Remind them that completed O&M manuals are a prerequisite for Substantial Completion and final payment.

Review and approve the O&M manuals, and transmit the final O&M manuals to U-M AEC Facilities Information Services (FIC).

- Instruct contractors to submit one copy of the O&M manual for approval as soon as completed. Review the manual for completeness and conformance to Specification 017823. Verify the contents are marked so they are project specific.
- Depending upon the number of comments, mark the manual "Approved", "Approved as Noted" or "Rejected - Revise and Resubmit". Repeat this review process as necessary until the manual can be used to make the additional manual copies.
- When the four approved copies of the O&M manuals are received from the CM or GC, prepare a transmittal memo and transmit all four copies to FIC. FIC will distribute the O&M manuals according to their procedures.
- If the O&M manuals are not complete at the time of transmittal, state in the transmittal that the manuals are not complete. When the CM or GC provides four copies of all of the missing pages required to complete the manuals, prepare a transmittal memo and transmit the four copies of the pages as above. State in the transmittal memo that each O&M manual holder shall insert the pages into his or her copy. Collect and transmit all of the missing pages only once. Multiple partial transmittals of additional pages are not acceptable.
- Test and Balance (TAB) reports shall be kept separate from but should be handled the same as O&M manuals. When the four approved copies of the TAB report are received from the CM or GC, prepare a transmittal memo and transmit all four copies to FIC.

Owner Training

Manage and conduct Owner training sessions.

Develop, with the assistance of the contractors, a training plan consisting of overview training (to be conducted by the CxA and the contractors) and any equipment or system specific training which has been specified in the contract document technical sections (e.g. boiler training). Refer to U-M Master specification MS 019100 for training plan and training requirements.

Execute training in compliance with the requirements outlined in MS 019100.

- Develop a logical plan generally organized on a system-by-system basis.
- Assure all equipment of system training required by the technical specifications has been identified, and include it in the plan in a manner that makes the training most effective.
- Assure the training includes OPR and BOD requirements pertinent to the Cx process. For example, identify spaces with special temperature and humidity requirements, what those requirements are, and fundamentally how those requirements are achieved.
- Identify critical sensors, transmitters, and other components whose continued calibration or proper operation are essential for maintaining required performance levels, safety and energy efficiency.

Identify the appropriate parties to be invited to each training session. These shall include:

- U-M Plant. Appropriate plant personnel will be identified and informed of the training by the U-M Plant Training Coordinator once the Coordinator is notified of the training.
- The building facilities manager.
- Users of user equipment supplied by the project. Contact the building facilities manager and the user representatives that assisted in the functional testing of the user equipment (refer to U-M DG 4.3.3) to determine the persons to invite.
- Parties as identified by the U-M Project Manager (contact the U-M Project Manager)
- Other parties that have expressed a desire to attend training and are appropriate to attend.

Invite the appropriate parties.

- U-M Plant: U-M Plant Training Coordinators (send email notification to Gene Weincouff <eawein@umich.edu> and Christine Nedrow <cnedrow@umich.edu>)
- Other parties per the above.
- Include date, time, duration, and brief agenda. List the systems, equipment, and building areas served, and if personal protective equipment is required.
- Do not schedule training sessions that extend past 3:00PM. Avoid scheduling training sessions on Mondays and Fridays.
- Arrange for classroom space when classroom training is specified (work with the U-M Project Manager to identify a location)

Execute the training sessions.

- Execute the training plan including over-view training and specification required technical training sessions. Describe the design intent of each system and the OPR and BOD requirements applicable to each session.
- Review the contents of the O&M Manual as they relate to the training session.
- Take attendance at all training sessions. Attendees shall print and sign their name on the attendance sheet.
- E-mail a copy of the attendance list to the U-M Plant Training Coordinators after training is complete.
- Insert copies of the attendance lists into the Commissioning Plan.

SAMPLE INTERIM CX REPORT

COMMISSIONING REPORT: < INSERT PROJECT NAME>

DATE:
REPORT NUMBER:
BUILDING NAME:
U-M PROJECT NUMBER:
TYPE OF REPORT: ☐ **INTERIM** ☐ **PROVISIONAL FINAL** ☐ **FINAL**

FROM: , Cx Authority **PHONE:** **CELL:**

CX TEAM DISTRIBUTION:

Name	Company	Name	Company	Name	Company

This report documents the status of systems being commissioned and tracks the resolution of issues discovered by the Cx team during the Cx process.

EXECUTIVE SUMMARY

Functional Tests Performed Since Last Report:

Major Issues Discovered:

New/Ongoing Impediments to Commissioning:

Overall Cx Progress:

The following pages provide a detailed list of issues discovered as a result of the Cx process.
Insert page break here

ISSUES DISCOVERED

Duplicate this table for each Cx Plan System and label each issue in the report with a unique number that includes the report number where the issue was first recorded, e.g. Report#.Issue#.

System:

Activities & Dates:				
Comments & Dates:				
Report#.Issue #	**Issue Description**	**Date Opened**	**Date Closed**	**Action By**

System:

Activities & Dates:				
Comments & Dates:				
Report#.Issue #	**Issue Description**	**Date Opened**	**Date Closed**	**Action By**

SAMPLE FINAL CX REPORT

COMMISSIONING REPORT: < INSERT PROJECT NAME>

DATE:
REPORT NUMBER:
BUILDING NAME:
U-M PROJECT NUMBER:
TYPE OF REPORT: ☐ **INTERIM** ☐ **PROVISIONAL FINAL** ☐ **FINAL**

FROM: , Cx Authority **PHONE:** **CELL:**

CX TEAM DISTRIBUTION:

Name	Company	Name	Company	Name	Company

This report documents the status of systems being commissioned and tracks the resolution of issues discovered by the Cx team during the Cx process.

EXECUTIVE SUMMARY

Functional Tests Performed Since Last Report:

Major Issues Discovered:

Cx Activities Still Outstanding:

Open Issues Directly Related to the Scope of the Project:

Issues Beyond the Scope of the Project:

Cx Recommendations/Lessons Learned:

The following pages provide a detailed list of issues discovered as a result of the Cx process.
Insert page break here.

ISSUES DISCOVERED

Duplicate this table for each Cx Plan System and label each issue in the report with a unique number that includes the report number where the issue was first recorded, e.g. Report#.Issue#.

System:

Activities & Dates:				
Comments & Dates:				
Report#.Issue #	**Issue Description**	**Date Opened**	**Date Closed**	**Action By**

System:

Activities & Dates:	
Comments & Dates:	

Report#.Issue #	Issue Description	Date Opened	Date Closed	Action By

DESIGN GUIDELINE 4.4.1
LANDSCAPING MATERIALS

Introduction

This section includes guidelines regarding the preservation of existing plant materials and standards for the design and installation of new plantings.

In general, plantings should be used to:

- Enhance the campus tree canopy
- Accentuate key focal points, including campus gateways, nodes, building facades and entrances and special exterior features such as artwork installations
- Define special areas such as plazas and seating/gathering points
- Buffer unattractive views to service areas, dumpsters and mechanical equipment
- Create green buffer zones between parking areas and campus
- Control pedestrian access and circulation as needed
- Achieve sustainable design goals such as water conservation, storm water filtering and absorption, urban heat sink reduction, and energy savings with the appropriate use of plants.

Related Sections

U-M Design Guidelines

6.0 DG 310000 Site Requirements
6.0 DG 312500 Soil Erosion and Sedimentation Control
6.0 DG 328400 Irrigation
6.0 DG 013639 Tree Preservation

Related Documents

LEED Reference Guide for Green Building Design and Construction
Southeast Michigan Council of Governments Low Impact Development Manual

Design Requirements

Planting designs should reflect the institutional scale of the campus and the particular setting in which they are located. Landscape plantings should be designed for maximum effect with limited maintenance, emphasizing broad sweeps of similar material. Areas of high visibility, such as the Central Campus Diag, should have a rich palette of native plants; areas of lower visibility, such as service docks, should minimize the use of turf grass by using native grasses and plantings. Detailed and complex plantings should be reserved for courtyards and other areas of smaller scale. High maintenance planting displays should be limited to high visibility areas where such maintenance is warranted.

Conservation of the mature and healthy native flora is essential in areas of campus where mature vegetation stands remain. Native vegetation should be used where additional plant

materials are needed to highlight the natural edge. Native plantings should follow the Grounds Department's priority designations guidelines.

The University is committed to using native or near native plantings whenever possible to protect and enhance the integrity of native plant communities, and to reduce the amount of water used for irrigation, maintenance requirements and chemical treatments.

Reduce the amount of manicured lawn in favor of landscaping with native plants and groundcovers. The site's soil type and topology will guide plant selection; performing a soil survey is necessary.

Consider the impact of new construction/renovations on existing landscape materials. Avoid damage to significant vegetation by careful routing of walkways, placement of parking lots and utilities to incorporate existing specimen trees and preventing damage to existing landscape material during construction through robust tree protection.

Avoid plantings within parking lot islands where heat and snow removal activities prohibit healthy growth. Instead emphasize perimeter landscape treatments to buffer views and to provide shade.

Design Manager should always consult with Utilities and Grounds Services during design phase and ensure Miss Dig contact is noted on all construction drawings.

Plant Selection

Plants will be selected to thrive in the conditions of the site. Consider the cultural and maintenance requirements for each plant before locating on a planting plan. Soil type, Ph. and topology along with water requirements, sun/shade requirements, hardiness, disease resistance and maintenance requirements will guide plant selection.

The A/E's site designer/AEC Design Manager should consult with the Grounds Services for a list of recommended native and other plants. Or, submit for review a plant list of hardy materials with an emphasis on native plants.

In general, removing and or planting trees or significant vegetation within the City of Ann Arbor's R.O.W. is not allowed. However, if approved, the A/E must use t the City of Ann Arbor's approved plants list when specifying planting plans within the ROW. In addition, they must work with the University Forester for any proposed tree removals. Tree value costs for trees removed will to be factored into the project budget.

Include the following installation requirements in the specifications:

- Perform a thorough weeding before planting the native vegetation. Adequate stabilization will be necessary to help establish the new plantings.
- Remove invasive species when encountered. Hand removal should be implemented wherever possible. (Note: Burning may be utilized for large areas where absolutely necessary. This must be discussed with the Design Manager during design.)

Security and Safety Issues

Plantings should be designed to provide open and unobstructed views and to eliminate concealment opportunities. For personal and safety and security considerations, avoid planting arrangements that create zones of entrapment, limit visual access into gathering spaces or along walkways or otherwise impede visibility from public view.

Deciduous trees should be selected that when mature provide views beyond at a height of 6 to 7 feet from the ground plane to the canopy. Evergreen, ornamental, or shade trees with lower canopy heights should not be used adjacent to walks, vehicular and bike parking areas, or building entrances.

Shrubs that are proposed adjacent to walks, vehicular and bike parking areas, or building entrances should generally be less than 36" tall at mature height. Larger shrubs should be limited to areas where they will not limit visual access or should be used in arrangements that do not create large masses. Plantings that are intended to be hedges should be selected so that mature heights do not exceed 36".

New trees should not be planted adjacent to proposed or existing light poles to avoid disrupting light levels.

Always consider a given plant material's mature state when developing plant spacing diagrams to avoid creating zones of entrapment and/or concealment. The spacing of new plants should be no less than 3/4 the mature spread of the plant.

Existing trees should be scheduled for trimming to remove any branches that impede adequate lighting or obstruct views between the grounds and the canopy.

Designs shall incorporate trimming or removal of shrubs that screen or limit views.

UNIVERSITY OF MICHIGAN

SITE FURNISHINGS STANDARDS MANUAL

University Planner's Office

Architecture, Engineering & Construction

University of Michigan

January, 2011

http://www.umaec.umich.edu/

Table of Contents

Introduction	page 3
Campus Landscape Design Elements	page 4
A. Seating	page 4
B. Tables	page 7
C. Umbrellas	page 10
D. Trash Receptacles	page 11
E. Ash Receptacles	page 11
F. Site Lighting	page 12
G. Bike Racks	page 13
H. Emergency Telephones	page 14
I. Fencing/Railing	page 16
J. Informational Kiosks and SORC Posting Boards	page 17
K. Plazas	page 18
L. Screen Walls	page 18
M. Bus Shelters	page 19
N. Bike Shelters	page 19
O. Signage	page 20
P. Public Art	page 20

The Site Furnishings Standards Manual is a companion to the AEC Design Guidelines, which designers must also adhere to (http://www.umaec.umich.edu/desguide/index.html).

Introduction

Intent: The landscape furnishings standards identify design considerations and recommend specific products to be used on the University of Michigan (U-M) campus. Unification of campus environment can be achieved through common landscape furnishings, colors and materials. The intent of these guidelines is to provide clear directions concerning site furnishings for the U-M campus, and to promote consistent and predictable use of public art, lighting, furnishings and fencing.

Flexibility: The recommendations presented are strongly preferred; however, furnishings and materials might vary slightly from project to project and over time. It is recommended that the degree to which landscape features vary be minimized and that shared attributes, such as forms, materials, patterns, style, application-spacing and color be consistent. In special situations, alternatives may be evaluated on a case-by-case basis to ensure that the design standards are followed.

Exceptions: Any exceptions to the guidelines will require review by the University Planner's Office (UPO) and the Exterior Elements Design Review Committee (EEDR).

Principles: Standard campus furnishings can help to integrate the campus environment and can further advance the sense and legibility of the place. The following principles summarize the intent of the guidelines.

1) Unification with common design elements
    a. Develop uniform landscape and site treatments for common problems and issues.
    b. Establish a more unified palette of materials for lighting, site furnishings, and landscape and hardscape elements.
    c. Enhance campus legibility and structure of campus.
2) Beautification and appearance of the campus
    a. Maintain and improve the visual quality of campus landscape.
    b. Establish a more visible and compelling public art presence.
    c. Develop signature amenities and improvements throughout the campus areas.
    d. Cluster furnishings to maximize effective use and minimize the negative visual impact within landscape.
3) Others
    a. Minimize and standardize maintenance requirements.
    b. Provide a safe and comfortable campus.
    c. Consider the limitations and needs of persons with disabilities to minimize potential obstructions and hazards.
    d. Minimize life-cycle costs by utilizing high quality products that are durable, backed by a solid warranty and vendor reputations and are comfortable and aesthetically pleasant.
    e. Provide furnishings where there is an existing demonstrated or potential future need.
    f. Install per U-M campus standards.

1. Campus Landscape Design Elements

The following section describes the recommended site furnishing material selection and design detail opportunities that will comprise the campus landscape design vocabulary. It is intended that repetitive use of this design vocabulary in the various campus development projects will result in a more organized, unified and beautiful campus. A single style of furnishings for each element described in the manual should be used exclusively to establish a unified and attractive campus character.

A. SEATING

1) Surface Mounted/In Ground Benches

a) Design Considerations

- Select bench locations in potential gathering areas to create comfortable settings conducive to conversation as well as security.
- Locate in a comfortable setting protected from vehicles/elements, and preferably with some landscaping and shading from the sun.
- Backless benches may be used in places where two-sided access and use are expected.
- Metal is preferred for durability.
- Complement existing standard furnishings, as well as landscape context and architectural features.
- Locate on and anchor to pavement. Benches should be set with a minimum setback of 12"-16" from edge of lawn to reduce damage from maintenance equipment.

b) Design Recommendations

- Plexus II collection from Landscape Forms Inc. is recommended as standard.

- Black powder coat is preferable.
- Alternative products on similar lines, including Forms + Surfaces, Sitescapes, and Victor Stanley, may be considered when approved by UPO.

2) Wall Mounted Benches

a) Design Considerations

- Wall mounted benches are preferred when snow removal and other maintenance is a concern.
- Select bench locations in potential gathering areas to create comfortable settings conducive to conversation as well as security.
- Locate in a comfortable setting protected from vehicles/elements, and preferably with some landscaping and shading from the sun.
- Metal is preferred for durability.
- Complement existing furnishings as appropriate, as well as landscape context, and architectural features.

b) Design Recommendations

- Plexus II collection from Landscape Forms is recommended as standard.

- Black powder coat is preferable.
- Alternative products on similar lines, including Forms + Surfaces, Sitescapes, and Victor Stanley, may be considered when approved by UPO.

3) Chairs

a) Design Considerations

- Freestanding chairs should be considered in courtyards, atriums or places that can be secured. They should not be considered in public or unsecured areas.
- Select chair locations in potential gathering areas to create comfortable settings conducive to conversation as well as security.
- Locate in a comfortable setting protected from vehicles/elements, and preferably with landscaping and shading from the sun.
- Complement existing furnishings as appropriate, as well as landscape context and architectural features.
- Metal is preferred for durability.
- Locate on the pavement with a minimum setback of 12"-16" from edge of lawn to reduce damage from maintenance equipment.

b) Design Recommendations

- Verona collection from Landscape Forms is recommended as standard. Black powder coat is preferable. The recommended specification is a Verona free standing arm chair.

- Alternative products on similar lines, including Forms + Surfaces, Sitescapes, and Victor Stanley, may be considered when approved by UPO.

4) Memorial/Commemorative Benches

a) Design Considerations

- A limited number of options have been approved for use as memorial or commemorative benches, see guidelines (http://www.umaec.umich.edu/eedr/index.html).
- Consult with UPO regarding requests for memorial or commemorative benches.

B. TABLES

1) Café Tables

a) Design Considerations

- If patio areas will be plowed in the winter, coordinate placement with Grounds depending upon the type of equipment to be used.
- Complement existing furnishings as appropriate, as well as landscape context and architectural features.
- Provide trash receptacles in close proximity.
- Locate them near dining and food vending areas.
- Consider umbrellas for shade where ever appropriate. Umbrellas must be permanently anchored to table; tables with umbrellas must be anchored to the ground.
- Locate on and anchor to pavement. Benches should be set with a minimum setback of 12"-16" from edge of lawn to reduce damage from maintenance equipment.
- Tables must be anchored on a clear, paved pathway in order to be wheelchair accessible.
- Five-seat table with an open space for wheelchair access is preferred.

b) Design Recommendations

- The recommended standard is Carousel by Landscape Forms. Both back and backless seats are acceptable.

- Black powder coat is preferable.
- Alternative products on similar lines, including Forms + Surfaces, Sitescapes, and Victor Stanley, may be considered when approved by UPO.

2) Free Standing Tables

a) Design Considerations

- Freestanding tables should be considered in courtyards, atriums or places that can be secured. They should not be considered in public or unsecured areas.
- If patio areas will be plowed in the winter, coordinate placement with Grounds depending upon the type of equipment to be used.
- Complement existing furnishings as appropriate, as well as landscape context and architectural features.
- Provide trash receptacles in close proximity.
- Locate them near dining and food vending areas.
- Locate the table on the pavement. Tables should be set with a minimum setback of 12"-16" from edge of lawn to reduce damage from maintenance equipment.
- Tables must be located on a clear, paved pathway in order to be wheelchair accessible.

b) Design Recommendations

- The recommended standard is a 36" Catena top by Landscape Forms with freestanding base.

- Black powder coat is preferable.
- Alternative products on similar lines, including Forms + Surfaces, Sitescapes, and Victor Stanley, may be considered when approved by UPO.

3) End Tables

a) Design Considerations

- Select locations to create comfortable and multi-functional spaces.
- If patio areas will be plowed in the winter, coordinate placement with Grounds depending upon the type of equipment to be used.
- Complement existing furnishings as appropriate, as well as landscape context and architectural features.
- Provide trash receptacles in close proximity.
- Locate them in potential gathering spaces and near to existing buildings.
- Locate in a comfortable setting protected from vehicles/elements, preferably with landscaping and shelter to the back, and shading from the sun.
- Locate on and anchor the table on the pavement. End tables should be set with a minimum setback of 12"-16" from edge of lawn to reduce damage from maintenance equipment.

b) Design Recommendations

- The recommended standard is the backless Plexus II series bench by Landscape Forms.

- Black powder coat is preferable.
- Alternative products on similar lines, including Forms + Surfaces, Sitescapes, and Victor Stanley, may be considered when approved by UPO.

C. UMBRELLAS

a) Design Considerations
- Consider umbrellas for shade wherever appropriate.
- Umbrellas must be permanently anchored to table.
- Complement existing furnishings as appropriate, as well as landscape context and architectural features.

b) Design Recommendations
- The recommended standard is an 8” Equinox umbrella from Landscape Forms.

- Metal umbrella is preferred.
- Black is the preferred color for umbrella and pole; however, on certain occasions the color can complement surrounding architectural or site features. The powdercoated pole should match the color of the umbrella.
- Alternative products on similar lines, including Forms + Surfaces, Sitescapes, and Victor Stanley, may be considered when approved by UPO.

D. TRASH RECEPTACLES

a) Design Considerations

- Trash receptacles should be compatible with benches and other furnishings, along with building architecture.
- Group with other furnishings to mitigate visual impact.
- Receptacles should be located in areas of high pedestrian traffic, such as sitting areas, building entries, patios, bus stops and campus plazas.
- Ensure trash receptacles are simple and unobtrusive design and easy to service.
- Provide removable insert to dump trash.
- Place in unobtrusive locations with a minimum 3’ setback along main pathways.
- Locate on and anchor the trash receptacle on the pavement. Set receptacles 12"-16" from edge of lawn to reduce damage from maintenance equipment.

b) Design Recommendations

- The recommended standard is Victor Stanley S-242, fabricated metal receptacle, 36-gallon capacity, with domed lid.

- Black powder coat is recommended.
- Alternative products on similar lines, including Forms + Surfaces, Sitescapes, and Landscape Forms, may be considered when approved by UPO.

E. ASH RECEPTACLES

- The University of Michigan is a smoke free campus (as of July 2011), and therefore ash receptacles will not be installed on university property. If issues arise before July 2011, consult UPO.

F. SITE LIGHTING

a) Design Considerations
- Establish lighting theme to complement campus facilities.
- Develop landscape lighting in parking lots that complements street and pedestrian lighting.
- Select and install a uniform lighting equipment style, to reinforce campus design theme. Coordinate selection of lighting equipment with campus standards.

b) Special Lighting Criteria
- Public art and landscape features may be accent lighted in conformity with campus standards and the lamp must be shielded from offsite view.
- Accent lighting equipment shall be of sufficient quality to resist vandalism and minimize maintenance. Preferred luminaries shall be flush to grade.
- Backlit, reverse pan channel signage systems are preferred for optimum readability of signage. LED systems are encouraged.
- Façade lighting shall require special review by the Exterior Elements Design Review Committee.
- Refer to section 16521 of the U-M master specifications on "Outdoor Lighting" for further details http://www.umaec.umich.edu/for.archs/masterspec.html

G. BIKE RACKS

a) Design Considerations

- Select a bicycle rack or hoop style that complements other furnishings and is attractive within the campus environment.
- The design should be simple, space efficient and serviceable.
- Racks should be placed to avoid conflicts with pedestrians. Locate bike loops close to building entrances where ever possible.
- Locating the bike hoops under building overhangs or other sheltered areas is preferable.
- Locate bike hoops close to bike paths, if it is not close to a building entrance.
- Bike parking area should be well lit.
- Work with UPO to decide the appropriate quantity of racks for the site.
- Racks should be installed usually on a wide sidewalk with 8 or more feet of clear sidewalk space remaining.
- Space 3' on center or 2'9" if absolutely necessary. Offset 4-5' from walks and 2' on ends and back to edge pavement.

b) Design Recommendations

- For general campus use, Matte Black PVC coated 1 and a 1/2" SCHD 40 1.9 O.D. bike hoop by S&G products 5117-546-9240 or approved equal.

H. EMERGENCY TELEPHONES

1) Free standing (kiosk)

a) Design Considerations
- Each new exterior project shall consider the installation of additional blue light emergency phones. Designers shall work closely with Department of Public Safety (DPS).
- Locations should be easily accessible to pedestrians, easily maintainable, and reviewed by DPS prior to finalizing design.
- Stagger the emergency phones throughout pedestrian corridors and provide at major road and walk intersections, especially in areas with poor visibility from roads.
- Locate on a concrete pad paved up to walkway for accessibility per university construction standard detail.

b) Design Recommendations
- All telephone stanchion, telephone backbox, beacon, stanchion light, phone and phone line should be furnished and installed by U-M ITCOM.

2) Surface Mounted

a) Design Considerations
- Locations should be easily accessible to pedestrians, easily maintainable, and reviewed by DPS prior to finalizing design.
- Stagger the emergency phones throughout pedestrian corridors and provide at major road and walk intersections, especially in areas with poor visibility from roads.
- Surface mounted phones should be considered when the surface below is occupied and creates limited conditions. Surface mounted is also preferred when a pedestrian way located adjacent to a building; when trying to avoid any obstruction in snow removal from pedestrian ways; and where there is need to locate on tunnels/vaults.

b) Design Recommendations
- All telephone stanchion, telephone backbox, beacon, stanchion light, phone and phone line should be furnished and installed by U-M ITCOM.

I. FENCING/RAILING

1) Ornamental Fence

a) Design Considerations
- Utilize along campus periphery, especially along roads and main corridors.
- Use within campus when aesthetically appropriate.

b) Design Recommendations
- Railing should be anodized aluminum with dark brown bronze powder coat finish. Other finish colors may be utilized depending on the location but require approval but UPO.
- Railing should be J.G Braun company series 950 style B heavy-duty aluminum railing or any equivalent approved by UPO.

2) Chain Link Fence

a) Design Considerations
- Use minimally and with discretion for enhancing safety or for a special area that needs protection from pedestrian traffic, or to restrict a vehicle from illegally leaving a parking lot.
- Minimize use along major pedestrian and vehicular thoroughfares.
- Use 2" spacing for general purpose and smaller openings for high-security areas.

b) Design Recommendations
- Black welded steel construction chain link is generally preferred.
- Use of black vinyl screen is recommended.
- Installation to follow U-M construction standards.

3) Post and chain

a) Design Considerations
- Post and chain is generally used for pedestrian control and is not intended for security and safety. However, this should be used as a last resort when it is not possible to redesign the landscape to direct pedestrians away from a sensitive area.
- Use single chain for vehicular control and double chain design for pedestrian control.
- It is used in areas where portable separation is needed, since this can be moved when necessary.

b) Design Recommendations
- Post and hardware available from South Lyon Fence. Chain is 5/16” black metal.

J. INFORMATIONAL KIOSKS AND SORC POSTING BOARDS

1) Informational kiosks for flyers

a) Design Considerations
- Locate on top of vents that are along major pedestrian corridors.
- Location should not be an obstruction during snow removal.
- Placement to be approved by UPO and EEDR.

b) Design Recommendations
- The information kiosk is custom designed and built, see UPO for details. Refer here for more information.

2) Student Organization Resource Center (SORC) boards

a) Design Considerations
- Locate along major pedestrian corridors and at major pedestrian gathering spots.
- Incorporate surfaces that display variety of information in a variety of directions.
- Location should not be an obstruction during snow removal.
- Placement of SORC boards is to be approved by UPO.

b) Design Recommendations
- The posting board follows a specific design that requires custom construction.

K. PLAZAS

a) Design Considerations
   - Provide appropriately sized space and furnishings that promotes social gatherings, sitting and group gatherings.
   - Create visual interest and encourage design responses that consider incorporation of appealing pavement patterns, seating, artwork, walls and spatial organization.
   - Avoid designs that create too much enclosure and create security hazards.
   - Contact UPO regarding design process.

b) Design Recommendations
   - Provide amenities like lighting and furnishings from a standard palette as a component of design.
   - Contact UPO for guidance.

L. SCREEN WALLS

a) Design Considerations
   - Screen walls should be placed so they do not block important views or impede visibility of vehicles.
   - Retaining walls should not be higher than 18” from grade to top of slope, otherwise a handrail will be required.

b) Design Recommendations
   - For visible areas, use an architectural concrete/stone or masonry.
   - For less visible areas, concrete is appropriate.

M. BUS SHELTERS

a) Design Considerations
- The A/E should work with UPO, Parking and Transportation Services and Public Safety to locate shelters.

b) Design Recommendations
- Contact UPO for the standard model information.

N. BIKE SHELTERS

c) Design Considerations
- Locate in high-use areas where existing bike racks are exposed to the elements.
- Cluster bike parking in groups that serve multiple buildings.
- Ensure that the placement of the parking and shelter do not impede the flow of pedestrians or otherwise block the ingress/egress of fire and emergency vehicles or personnel.

d) Design Recommendations
- The recommended standard is Duo Guard's Parachute, modified to U-M specifications.
- Frosted glass top and black powdercoated steel is preferred.

O. SIGNAGE

- Exterior signage follows specifications as set forth in the Wayfinding and Signage Guidelines (http://www.umaec.umich.edu/eedr/index.html). Consult with UPO in regard to all exterior signage.

P. PUBLIC ART

- Placement of public art on the campus grounds is administered by the President's Advisory Committee on Public Art (http://www.public-art.umich.edu), with site requirements determined by the UPO.

DESIGN GUIDELINE 4.4.5
SITE SIGNAGE

Scope

Scope: Provide all necessary signage for pedestrian and vehicular traffic flow, both on University property and within City of Ann Arbor Right of Way (ROW). Scope does not include or refer to University of Michigan building signage.

Related Sections

U-M Design Guideline Sections:
4.4.2 Site Furnishing Standards

Reference Documents:
Michigan Manual of Uniform Traffic Control Devices
Michigan Department of Transportation Standards and Special Details
International Fire Code
Michigan Department of Transportation
Fire apparatus access requirements
International Code Council Section D103 Minimum Specifications

Design and Installation Requirements

For all impacts to the City ROW ensure required signage for new or modified parking spaces, fire lane access points, bike lanes and midblock crosswalks have been included in the scope of the project. Include all permanent traffic and pedestrian traffic control.

Provide site signage, as applicable, for project. Including but not limited to:

- Permanent traffic control signage, stop signs, speed limit signs.
- Pedestrian traffic control signs, mid-block cross walk signage.
- Fire lane access points
- Bike Lanes
- Specific parking restrictions
- Signage marking no driving zones (weight limits due to underground tunnels)

Provide temporary site signage for pedestrian and vehicle traffic for construction.

DESIGN GUIDELINE 4.5
REGULATED AND HAZARDOUS MATERIALS

General

This section addresses the management and disposal of regulated and/ or hazardous materials that may be encountered in construction projects. University of Michigan (U-M) policies require proper management of regulated, hazardous and other construction waste to comply with local, state and federal regulations and to encourage environmental stewardship. Construction materials and waste included in this section are: asbestos containing materials (ACM), CFC & HCFC containing refrigerants, lead, mercury, PCBs, radioactive materials and miscellaneous regulated construction waste. A/Es should be aware that individual projects may encounter other materials requiring special handling that are not outlined in this section. The A/E shall work with the University Project Coordinator to identify a list of materials which are hazardous, regulated and/or require special handling and which are likely to be encountered during demolition and construction.

Related Sections

Design Guideline Technical Sections:
6.0 DG 230040 - Hydronic Systems and Specialties

U-M Master Specification:
7.0 MS 011400 - Work Restrictions
7.0 MS 028213 - Asbestos Remediation
7.0 MS 028214 - Asbestos Remediation – Floor Tile and Mastic
7.0 MS 028215 - Asbestos Remediation – Roofing Material
7.0 MS 028300 - Lead Remediation
7.0 MS 028333 - Lead Remediation – Renovation, Repair and Painting In Child-Occupied Facilities and Target Housing
7.0 MS 028110 - Regulated Construction Waste Remediation
7.0 MS 220719 - Mechanical Systems Insulation
7.0 MS 232116 - Hydronic Piping Specialties
7.0 MS 260500 - Common Work Results For Electrical

References

United States Department of Labor, Occupational Safety and Health Administration (OSHA), 29CFR Part 1926: Asbestos in Construction Standard

U-M Occupational Safety and Environmental Health (OSEH) "Asbestos Management Program."

U-M OSEH "Spill Prevention Control and Countermeasure Plan" and "Pollution Incident and Prevention Plan"
Section 2.6 "Best Management Practices for Lithium Bromide Systems."
Section 2.7 "Best Management Practices for Ethylene Glycol Systems."

U-M OSEH "Lead Management Program"

United States Department of Labor, Occupational Safety and Health Administration, 29CFR Part 1926.62 and State of Michigan Occupational Safety and Health Administration (MIOSHA) Rule 325.51991-51992: "Lead in Construction."

United States Environmental Protection Agency EPA 40 CFR 745 "Requirements for Lead-Based Paint Activities in Target Housing and Child-Occupied Facilities;" and "Requirements for Hazard Education Before Renovation of Target Housing;" and "Identification of Dangerous Levels of Lead."

Lead Abatement Act (Michigan Part 54A).

Lead Remediation Rules (MCDH Rule 325).

ASHRAE Standard 15 and Related Revisions: Safety Code for Mechanical Refrigeration.

ASHRAE Standard 34 and Related Revisions: Number Designation and Safety Classification of Refrigerants.

United States Environmental Protection Agency (US EPA) requirements of Section 808 (Prohibition of Venting and Regulation of CFC).

MI Public Act 451, Part 121: Liquid Industrial Waste.

Michigan Department of Environmental Quality (MDEQ), Part 31, Water Resources Protection, of the Natural Resources and Environmental Protection Act, 1994 PA 451.

Michigan Department of Environmental Quality (MDEQ), Part 55, Air Pollution Control, of the Natural Resources and Environmental Protection Act, 1994 PA 451, as amended (Act 451).

Asbestos and Asbestos-Containing Materials (ACM):

Introduction

The current OSHA asbestos standard requires that products used in the workplace be labeled if they contain greater than 1% asbestos and are likely to result in exposures above the permissible exposure limits during reasonable foreseeable use, handling, storage, disposal, processing, or transportation. Material Safety Data Sheets may contain one of the following synonymous names:

Chemical Name: Magnesium Silicate
Mineral Names: Chrysotile, Amosite, Tremolite, Crocidolite, Anthophyllite, Actinolite
Common Names: serpentine, amphibole, fibrous grunerite

ACM in Renovation Projects

Many U-M buildings contain ACM, particularly those constructed before the early 1980's. Prior to renovation activities all buildings, ***including those built after the 1980's,*** must be surveyed for asbestos containing materials. Contact U-M OSEH well in advance of the project to coordinate a survey of building materials for asbestos. Some U-M buildings have already been surveyed for asbestos containing materials. U-M OSEH maintains an ACM database for all U-M buildings previously surveyed for asbestos. OSEH conducts additional tests where required to identify additional ACM note already identified in the database. At U-M, some ACM is labeled in the field, but in many cases, labeling is impractical. Labeling of ACM, if deemed necessary, is generally conducted by OSEH.

In general, U-M strives to remove ACM, as opportunities present themselves. At a minimum, projects that require some abatement are responsible for minimum required abatement. In some cases abatement may be expanded to address all ACM of a certain type in a certain area. Coordinate ACM abatement scope with U-M Project Coordinator and OSEH.

In many cases asbestos abatement projects are designed and conducted by the University, and the University contracts separately for asbestos abatement. Therefore the A/E involved with the design of a renovation project may not be required to include asbestos abatement specifications in the Bid Documents. However, A/Es must make the University Project Coordinator aware if they suspect that asbestos may be encountered due to project activity. In addition, the A/E should advise the Contractor on the construction documents that asbestos may be present in the area or adjacent areas of the renovation project, and to conduct their work accordingly.

Refer to U-M Master Specification Section 15240 regarding reinsulation of abated mechanical insulation.

ACM in New Construction

U-M does not permit the use of new ACM in construction projects. A/Es should be aware that asbestos-containing products may still be legally manufactured, imported and sold in the United States, although very limited quantities are probably produced. Legal products include but are not limited to floor tile, floor tile adhesive, sealants, plaster, and roofing materials. Because of the possibility of encountering ACM, prohibitory language should be added to specification sections covering materials which might contain asbestos.

In the event that a particular performance requirement is identified that can only be satisfied by the use of ACM, the A/E should contact OSEH through the University Project Coordinator and submit a written request for authorization. Approval for new ACM usage must be obtained prior to specification and installation. If approval is received, proper documentation will be coordinated with OSEH.

CFC & HCFC-Containing Refrigerants:

The University requires that all work related to refrigerant contained in chillers, cooling coils, air conditioners, and similar equipment, including related piping, be handled in strict accordance with the referenced standards. A/Es should advise contractors of these requirements. In addition, the University has tracking procedures in place for CFC and HCFC refrigerants. When new refrigeration equipment is installed, when old refrigeration equipment is removed, or when refrigerant is disposed of, include language in the Contract Documents directing the Contractor to inform the Owner's Plant Operations Air Conditioning Shop. Refer to U-M Master Specification Section 01140. Copies of the required form are available at:
http://www.plant.bf.umich.edu/utilities/operations-engineering/CFC_Form.pdf

Recovered refrigerant shall be handled through the U-M Plant Operations Air Conditioning Shop. Direct the Contractor to contact the Plant Operations Air Conditioning Shop to properly handle the recovered refrigerant. In most cases, U-M A/C Shop will remove refrigerant for reclamation.

Ethylene Glycol

Ethylene glycol systems are used on campus in some heating, ventilation and air-conditioning systems. Ethylene glycol is regulated by the State of Michigan as a Liquid Industrial Waste. Consequently, the Contractor's disposal methods are subject to the oversight of U-M OSEH. Where mechanical devices or systems containing ethylene glycol are indicated to be demolished, direct the Contractor to legally dispose of ethylene glycol. The Contractor shall contact U-M OSEH Environmental and Hazardous Materials Management Program (734-763-4568) in the event of an accidental spill of ethylene glycol.

Refer to U-M Design Guideline Technical Section 15515 and U-M Master Specification 15515 for design and installation requirements for glycol systems.

Lithium Bromide

Lithium bromide is used on campus in most absorption chillers. Lithium bromide within these systems is contained within the machinery and does not circulate throughout the building. Where absorption chillers are indicated to be demolished, contact the U-M Plant Operations Air Conditioning Shop to determine whether the recovered lithium bromide can be used in other machinery.

If it is determined that the lithium bromide cannot be used in other machinery and it is to be disposed of, it is subject to regulation by the State of Michigan as a Liquid Industrial Waste. Direct the Contractor to coordinate removal activities with UM OSEH's tracking program and to legally dispose of lithium bromide. The Contractor must contact U-M OSEH Environmental and Hazardous Materials Management Program (734-763-4568) in the event of an accidental spill of lithium bromide.

Lead

Lead may be a component of building materials in many campus buildings. Materials likely to contain lead include latex and oil based paints (especially paints manufactured before 1978), radiation shielding materials, plumbing joints, solder, pipe wrap, flashing and other materials used as soundproofing. Construction activities that may result in lead exposure include sanding, scraping, cutting, grinding, welding and demolition. The University Project Coordinator will arrange to have a lead survey completed early in the design process, through U-M OSEH.

Procedures for working with lead-based paint (LBP) and other lead-containing material (LCM) depend on the type of work being completed and the type of building in which the work is occurring. Of particular concern are construction projects that create lead disturbances in child-occupied facilities (child care centers and family housing). For projects in or affecting child-occupied facilities, A/Es should work with the University Project Coordinator and OSEH early in the design process to develop custom specifications addressing specific project conditions and additional state and federal regulations.

For other University buildings, Master Specification Section 13285 outlines the University policy and procedures that have been developed in conjunction with OSEH to meet all applicable local, state and federal regulations for non-child occupied facilities.

Use of LCM in New Construction

The University discourages the use of new LCM in construction projects. In the event that a particular performance requirement is identified that can only be satisfied by the use of LCM, the A/E should contact OSEH through the University Project Coordinator and submit a written request for authorization. If approval is received, proper documentation will be coordinated with OSEH.

Lubricant or Other Oils

Introduction and Policy

Oils are regulated by the State of Michigan as a Liquid Industrial Waste. Consequently, the Contractor's disposal methods are subject to the oversight of UM OSEH. Where mechanical devices that contain lubricant or other oils are indicated to be demolished, direct the Contractor to legally dispose of the oils. The Contractor must contact UM OSEH Environmental and Hazardous Materials Management Program (734-763-4568) in the event of an accidental spill.

Mercury

Mercury-containing articles and equipment likely to be encountered during construction include but are not limited to controls, thermometers, thermostats, switches, manometers and gauges. Fluorescent laps also contain mercury. See paragraph below regarding lamp recycling.

Mercury-containing articles and equipment are considered regulated construction waste and must be disposed of through the OSEH Environmental and Hazardous Materials Management Program. OSEH will package, pickup and dispose of properly staged Regulated Waste at no cost to the Contractor.

A/Es should direct the Contractor to handle mercury-containing articles and equipment with extreme care to prevent the release of elemental mercury. Mercury-containing articles and equipment must be properly packaged with adequate cushioning in only OSEH-provided containers. In the case of an accidental spill of elemental mercury, the affected area must be immediately evacuated, closed to traffic and OSEH or DPS contacted for clean-up.

PCBs

Bulk Product Waste

PCB (Polychlorinated Biphenyl) bulk product waste refers to waste derived from manufactured products containing PCBs in a non-liquid state. This includes applied dried paints, varnishes, waxes, or other similar coatings or sealants. The University Project Coordinator will arrange to have a PCB survey completed by UM OSEH early in the design process.

A/Es shall direct Contractors to dispose of PCB-containing waste in coordination with OSEH. There are no specific requirements for containerizing or segregating PCB bulk product waste, if the concentration of PCB's is less than 50 parts per million (ppm). It can be disposed with other construction debris in a municipal or non-municipal non-hazardous waste landfill licensed by the State of Michigan, Department of Environmental Quality. If the concentration of PCBs in the waste is greater than 50 ppm, it must be collected by UM OSEH for disposal. Coordination is required, since OSEH must notify the landfill, 15 days in advance, of the type of waste to be disposed. A PCB concentration less than 50 ppm does not require notification.

Liquid Waste (Older Electromagnetic Ballasts)

Older electromagnetic ballasts may contain liquid PCBs. A/Es shall advise the Contractor that the University requires recycling of all fluorescent lighting ballasts, along with tubular fluorescent, compact fluorescent and HID lamps as a part of the OSEH's Environmental Stewardship program. Master specification section 16010, "Basic Electrical Requirements" outlines proper packaging and pick-up requirements for fluorescent lamps and ballasts. Leaking electromagnetic ballasts shall be packaged separately from intact ballasts to avoid contamination. Contractor shall coordinate proper handling, packaging and decontamination of surrounding materials with OSEH for all leaking ballasts. Electronic ballasts do not contain PCB's and are to be packaged separately from electromagnetic ballasts.

Radioactive Materials

Common construction waste that may contain low levels of radioactivity includes but is not limited to smoke detectors and self luminescent exit signs.

Construction waste containing any level of radioactivity must be disposed of through the OSEH Environmental and Hazardous Materials Management Program. OSEH will package, pickup and dispose of properly staged Regulated Waste at no cost to the Contractor. A/Es should advise Contractors to handle and package self luminescent exit signs with extreme care. They contain fragile glass tubes filled with a radioactive gas, and care must be taken not to break the glass during demolition and recycling. Collect the frame of the exit sign as it may contain sign specific information. For radioactive smoke detectors, collect both the top and the bottom of the unit.

There are research laboratories on campus that use radioactive materials. When a lab that uses radioactive materials relocates or discontinues radioactive research, the lab will undergo a strict decommissioning process in coordination with OSEH Radiation Safety Services. If an A/E suspects that the radioactive materials may have been present in an area which will undergo renovation, immediately notify the University Project Coordinator, who will contact OSEH in order to schedule decommissioning. This process will be completed before a construction project is undertaken.

Regulated Construction Waste

The term "Regulated Waste" refers to building equipment or materials that will be demolished as part of a renovation or construction project, but cannot be disposed of as typical construction and demolition debris. Materials include but are not limited to the following:

- Batteries, including but not limited to lead-, nickel- and or mercury-containing batteries from exit signs, smoke detectors and backup power sources.
- Containers of paint and paint related materials, cleaners, pesticides, compressed gas cylinders and portable fuel cans.
- Fire extinguishers.

OSEH will package, pickup and dispose of properly staged Regulated Waste at no cost to the Contractor, provided that the waste has actually been removed from UM buildings. A/Es should instruct the Contractor to Contact OSEH Environmental and Hazardous Materials Management Program (734-763-4568) to schedule a pickup immediately after regulated waste has been staged. Incidental Regulated Waste that is not removed from UM buildings must be properly disposed of by the Contractor.

Suspect Contaminated Soil, Groundwater, or Unknown Material

During work activities, if suspect contaminated soil, groundwater, or other unknown material is encountered, the suspect material must be characterized to determine if special handling, or disposal protocol is required. Suspect contaminated soil may exhibit chemical or unusual odors, staining, unusual coloring, and/or contain man-made debris. Suspect contaminated groundwater may exhibit chemical or unusual odors, unusual coloring, and/or sheen.

A/Es shall direct the Contractor that if suspect contaminated soil, groundwater, or other unknown material is encountered, they shall immediately cease all excavation, dewatering, transport, or disturbance of the suspect material, and they shall contact the U-M Project Manager and U-M OSEH (763-6973) immediately. Direct the Contractor not to resume activities until given direction by the U-M Project Manager.

Bulk Chemical Storage (tanks and drums)

Secondary containment is required for all chemical or oil bulk storage (drums or tanks) according to the MDEQ, Michigan Part 5 Rules and the Ann Arbor Sanitary Sewer Ordinance.

Some options for secondary containment include building a berm (curb), using double wall tanks or using spill pallets. The University considers it preferable to construct a permanent berm rather than using spill pallets.

The secondary containment must have the capacity to hold the volume of the largest container or 10% of the combined containers, whichever is larger. If the room has no floor drains, and if the required volume can be completely contained without escaping through cracks in the floor and pipe penetration, over thresholds, etc., then the room itself may be considered sufficient secondary containment. If the room is considered the secondary containment ensure there is a lip at the door so no liquids can exit the room in the event of a leak. Consider use of leak detection and alarm for the secondary containment, depending on hazard posed, and on likelihood that a leak will be observed within in reason period of time.

DESIGN GUIDELINE 4.6
UTILITIES FOR UNIVERSITY BUILDINGS

Scope

This section discusses building utilities associated with U-M facilities; both utilities that are provided by the University from central sources, and utilities that are provided by non-University sources.

Related Sections

Special Building Areas:
5.9 SBA-H Tunnels

Design Guideline Technical Sections:
220010 Plumbing Specialties
230050 Chilled Water Systems

Utility Distribution Overview

The University distributes electricity to the Central, Medical, and North Campuses and parts of the Athletic/ South Campuses.

Central Campus Utilities provided by the University's Central Power Plant include:

- Electricity
- Low Pressure Steam (minimum of 6 psig, 230°F)
- Medium Pressure Steam (60 psig, 307°F)
- Steam Condensate (pressure varies throughout the system, consult with AEC Mechanical Group though U-M Design Manager for backpressure design requirements)
- Compressed Air (90 psig, minus (-) 50°F pressure dewpoint)
- Domestic Hot Water (50 psig, 120°F, un-softened, pressure varies throughout the system, consult with AEC Mechanical Group though U-M Design Manager for design requirements).

The utility properties described above are guaranteed at the point the utility enters the building.

In parts of the Athletic and South Campus, high pressure (60 psig) steam with condensate return is provided from the University's Hoover Street Heating Plant.

Other facilities may have regional or local steam systems capable of providing adequate capacities. Steam pressures may vary for these systems. Where these capacities exist, the proposed facility shall utilize them. Coordinate facility loads and intent with the U-M Design Manager. Utilities and Plant Engineering, through the U-M Design Manager, will determine and provide the locations and capacities of existing systems.

University Provided Utilities

Steam - Central Campus

Low pressure steam should be used for building heating and humidification loads and for absorption chiller cooling, because of the economy of generation and cogeneration in the Central Power Plant. Refer to Design Guideline Technical Section 230050 Chilled Water Systems and consult with U-M Design Manager before deciding on chiller type (absorption or electric).

Because of power plant economy, Central Campus High Pressure Steam (60 psig) use is generally limited to the following applications:

- For critical buildings such as research labs and medical clinics, where sufficient HPS capacity is available, HPS via a pressure regulating valve should be used to provide redundancy to the building low pressure steam supply during interruptions. Refer to Special Building Areas 5.9 Tunnels for additional discussion on requirements for PRV's and back-up steam.
- Special equipment requiring higher temperature source steam, such as sterilizers.
- Multi-zoned application of "clean steam" humidifiers. "Clean steam" is defined as the steam generated from campus steam via a heat exchanger, using high purity water for makeup. Single zone clean steam shall be generated from LPS, but where multiple and separately controlled building zones must be fed from a single steam generator, HPS may be used.

HPS steam shall not be used to boost existing nominal LPS pressure to higher pressures.

Steam Condensate

Central Campus condensate from low pressure steam shall be vented to atmosphere and pumped to the campus distribution system at minimum 30 psig pump discharge pressure. Condensate from high pressure steam shall be routed to a flash tank prior to connection to condensate receiver unit. Consult with AEC Mechanical Group through the U-M Design Manager for required backpressure at point of connection to tunnels. South/ Athletic Campus condensate shall be similarly returned to the Hoover Street Heating Plant.

Domestic Hot Water – Central Campus

New domestic hot water (DHW) connections on Central Campus should not make use of the central campus domestic hot water return (DHWR) system. Provide DHWR and return water re-heating system internal to the building, typically using low pressure steam and a shell and tube heat exchanger. Refer to Special Building Areas 5.9 Tunnels. Provide backflow prevention via a UL approved double check valve assembly on DHW as it enters the building. Refer to DG Technical Section 220010 regarding type of backflow prevention.

Chilled Water - Regional Plants

Chilled water from regional chilled water plants is available at some locations on North Campus and Central Campus. Where regional chilled water is available and suitable for the intended loads (temperature, reliability, seasonal variability etc.), it should be utilized. Contact the U-M Utilities and Plant Engineering Department through the U-M Design Manager for direction.

Non-University Provided Utilities

Within the City of Ann Arbor service area, potable/ city water shall be connected to City of Ann Arbor water system. Coordinate with U-M Design Manager on City of Ann Arbor review process and requirements.

Storm/ Sanitary Sewer: Coordinate with U-M Design Manager on City of Ann Arbor review process and requirements.

Natural Gas: Coordinate with DTE and U-M Design Manager on new or modified natural gas load or pressure requirements.

Utility Corridors

The U-M has defined Utility Corridors in many areas on campus. Wherever possible, new underground utilities shall stay within established corridors. Coordinate with U-M AEC University Planners Office via U-M Design Manager.

Easements

Non-University provided Utilities on University property and University provided Utilities on Non-University property (including City of Ann Arbor or M-DOT controlled property; sidewalks, streets and Right of Way) require an easement.

The review process and process of securing easements can often be lengthy. In addition to any City, State or Non-University Utility review processes, U-M AEC University Planners Office (U-M UPO) must approve all requests for easements and right of way agreements. All documents (excluding permits) will be processed through the U-M AEC Real Estate Office (U-M REO) Coordinate with U-M UPO and REO via U-M Design Manager

Metering

The following utilities shall be metered in accordance with methods and means specified in other sections of the Design Guidelines:

- Electricity.
- Central Campus Steam Condensate.
- Steam, where humidification loads are greater than 500 pounds of steam per hour.
- Chilled water from regional plants – flow and BTU metering.
- Domestic Cold Water
- Fire Protection Water (bypass only)
- Natural Gas

Where a regional chilled plant is part of a facility, metering or sub-metering shall be provided to measure the utilities consumed by the plant separately from the building metering.

Domestic Cold Water, cooling tower make-up water and cooling tower blow down, irrigation water and fire protection backflow prevention bypass (detector check bypass) shall be metered

separately in accordance with the City of Ann Arbor standards. Refer to Design Guideline 220010 Plumbing Specialties.

Domestic Hot Water (from Central Campus system) does not require metering as it enters the building.

DESIGN GUIDELINE 4.7
BUILDING ACCESS CONTROL

General

This section addresses minimum functional and technical requirements of the Building Access Control (BAC) system on the University of Michigan Ann Arbor Campus. Functional requirements apply to General Fund buildings. Technical requirements apply to all buildings connecting to the campus BAC system.

The following campuses and units maintain their own respective access control systems, standards, and hardware:

- Athletics: Contact Design Manager.
- North Campus Research Center (NCRC): Contact Design Manager
- University of Michigan Hospitals and Health Centers (UMHHC): Contact UMHHC Facilities Planning and Development.
- University of Michigan Housing (UMH): Contact Design Manager
- University of Michigan - Dearborn campus: Contact Design Manager
- University of Michigan - Flint campus: Contact Design Manager

Related Sections

U-M Design Guideline Sections:
6.0 DG 087100 Door Hardware

U-M Master Specifications:
7.0 MS 087100 Door Hardware
7.0 MS 281300 Access Control and Monitoring System
7.0 MS 281600 Security Systems

U-M Standard Details:
16725 Series - Request from Design Manager

Definitions

Building Access Control (BAC): Campus central electronic system (existing), local building panels, distribution and hardware that controls and monitors access to a building and areas within a building based on one or more of the following types of doors:

- *Monitored*: Use of door monitor switch and request to exit device to detect forced door openings and door held conditions.
- *Electronically scheduled*: Use of a central time clock to electronically schedule the locking and unlocking of doors plus functions described for monitored doors.
- *Card reader*: Use of a card to unlock a door plus functions described for monitored and electronically scheduled doors.

- *Card reader with auto door operator*: Use of a push button to initiate a low energy operator that is interfaced with BAC functions described for monitored, electronically scheduled, and card reader doors.

Mechanical or battery operated digital access control hardware: Stand alone mechanical locks that use keypads or other local methods of authentication to gain access to a secured area.

Surveillance systems: Surveillance systems shall include any Closed Circuit Television (CCTV) system installed for the purpose of viewing and/or recording video images for security or system troubleshooting purposes.

BAC: Minimal Functional Requirements

General:

- Access control system is intended to control the perimeter of secured spaces or buildings, not individual doors. For example: A building contains an interior suite that has multiple access points and is requesting access control, all doors accessing the suite shall be connected to the BAC system as appropriate for their intended use. After hour access points to suite shall be card reader, daytime access points shall be electronically scheduled, exit only doors shall be monitored. No keys will be issued to occupants for that secured area.
- Door operation for all access controlled doors:
  - Provide key cylinder and hardware capable of mechanical access on all card reader doors.
  - Do not provide handle or cylinder on exit only egress doors.
  - Provide hardware that allows manually-actuated egress requiring only a single operation at all times.
- Access control system is independent of the building fire alarm system. If connection is required at a specific opening, interface will occur at the door level, not the system level.

New buildings, additions and major renovations

Evaluate the physical and programmatic layout of the building as related to BAC locations and security requirements. Layout should avoid egress paths through secured areas, interior connections to adjacent buildings, and control points that are required by code to connect to the building fire alarm system. Review draft life safety egress plans identifying security and access control plans with Design Manager, representative from UM Key Shop, and other University stakeholders during schematic design phase.

Exterior Doors

Provide exterior doors that connect to the campus BAC system and meet the following minimum requirements:

- Card reader with auto door operator: At least one access point for authorized after- hour use. Locate at main accessible building entry door.
- Card reader doors: All locations needed for authorized after-hour use, including

personnel doors to loading docks, mechanical, and high voltage areas.

- Electronically scheduled doors: All exterior entrance doors used for ingress during building hours of operations.
- Monitored doors: All remaining exterior doors including loading dock, overhead, and roof access doors.
- Other door types:
    - Exterior doors that provide access to building services spaces (mechanical, electrical, elevator machine, and grounds rooms) but do not provide access to the building interior may not require access control capability. Review with the Design Manager.
    - Doors equipped with an intercom or other communication device to allow a momentary remote unlocking of doors is permitted in select situations only. Review with Design Manager and Department of Public Safety.

Review location and quantity of each door type described above with the Design Manager.

Interior Doors
Required location:

- Telecommunications rooms housing HIPPA protected data.
- Reflection rooms.

Contact Design Manager early in the design process to review additional project specific interior security requirements. Consider preparing doors for future access control installation.

Elevator Doors
Do not connect elevator doors to BAC system

Special alarm systems
Contact Design Manager early in the design process to review the need for special alarm systems.

BAC - Technical Requirements

UM Master Specification Sections 281300 Access Control and Monitoring System and 281600 Security Systems shall be used as the basis for access control specification for all projects including access control doors connected to the campus central system. Edit to be project specific.

AEC maintains standard details for access control panel assemblies and commonly used door configurations. Request from Design manager. Edit to be project specific.

Access control system:

- Existing system: SoftwareHouse C-Cure 800 system
- Access control panel: iStar Pro Series
    - Locate panel assemblies in telecommunications rooms.
    - Provide pathway to Plant network switch for panel communication.

- Consider future system expansion when determining panel distribution in building.

Related Systems and Hardware

Surveillance Systems
Contact the Design Manager early in the design process to review the need for surveillance systems.

Mechanical or battery operated digital security hardware
Provide stand alone mechanical or battery operated digital security hardware for select interior applications only. Contact the Design Manager to review interior security requirements.

DESIGN GUIDELINE 4.8

FALL PROTECTION ON ROOFS

General

This section specifically includes design requirements and standards for fall protection measures on roofs and skylights. It does not address policies and procedures for employee fall protection.

References

Comply with the following:

MIOSHA Part 45 Fall Protection Standard for Construction Industry
MIOSHA Part 2 Wall and Floor Openings, Stairways and Skylights
ANSI/ASSE Z359.1-2007, Parts 3 and 5 and Z359.2-2007, Part 5

Related Sections

UM Design Guideline Sections:
6.0 DG 075000 Roofing Systems

Design Requirements

Rooftop Equipment Maintenance

Design rooftop areas containing a fall hazard of greater than four feet with specific regard to fall protection. Comply with the following passive protection measures wherever possible:

- Locate equipment (including roof drains) a minimum of six feet from the edge of the roof. This includes any pathways to or around the equipment. A clear pathway must be provided.

- Include permanent structures such as parapet walls or guard rails that meet MIOSHA regulations.. Note that the guard rails can form a perimeter around the equipment and service space rather than being mounted at the edge of the roof.

If the project budget or architectural considerations preclude using one of the two methods above, obtain the approval of the Design Manager to substitute a permanently mounted anchorage system and/or a horizontal lifeline system for personal fall arrest complying with the following:

- The anchorage system must be designed by a qualified engineer and installed under the supervision of a qualified individual.

- The anchorages must be located a minimum of ten feet from the roof edge and must be easily accessible.

- The interval between tie-offs must be spaced no more than fifty feet apart. Tie off point must accept a safety line that will use a trolley.

- Anchorages must be situated so as to minimize the fall distance and the possible damage to fall arrest lanyards from nearby sharp or rough edges.

- Anchorage points must be independent of any anchorage being used to support or suspend platforms.

- Anchorage points are mandatory for steep pitch roofs (greater than 4:12), whether or not passive protection is also provided.

Anchorage Point Certification

- Anchorage points need to be tested and certified upon installation.
- Documentation of certification, including location, weight, date tested, party responsible for testing etc. shall be submitted to owners representative prior to project close out.

Roofing Material Maintenance

- **If a parapet wall or guardrail around the edge of roofing is not installed, a permanently mounted anchorage system** and/or a horizontal lifeline system for personal fall arrest **must be installed to allow for the safe maintenance of the roofing material. Follow criteria cited above.**

Skylights

- Provide appropriate fall protection at all skylights. Guards and / or screens must comply with MIOSHA regulations and Michigan Building Code.
- Provide permanent signage on guards at perimeter of skylight noting designed weight limits.
- Provide permanent signage on guards at perimeter of skylight noting "Warning – skylight. Do not step stand or sit on skylight. Access only for cleaning and maintenance by approved personal."

OUT TO BID

DESIGN GUIDELINES

1.0 CODES AND REGULATORY AGENCIES

2.0 PROJECT PROCEDURES

3.0 SUSTAINABILITY

4.0 SPECIAL INSTRUCTIONS TO DESIGNERS

5.0 SPECIAL BUILDING AREAS

6.0 TECHNICAL REQUIREMENTS

7.0 MASTER SPECIFICATIONS

8.0 PREFERRED MANUFACTURERS LIST

9.0 STANDARD DETAILS AND SCHEDULES

10.0 CHANGES TO DESIGN GUIDELINES

BUILDING COMMISSIONING

CONTRACTS & AGREEMENTS

5.0 SPECIAL BUILDING AREAS

Contains design criteria and design approach specific to certain building or room types.

	Last Update	Previous Version	Replaces Document
5.1 Office Space Guidelines (maintain by Office of Provost) The guidelines provide space-per-person recommendations by position type.			
5.2 Animal Facilities	November 2013	September 2008	SBA-A Animal Facilities
5.3 Loading Docks	August 2014	May 2003	SBA-B Loading Docks
5.4 Telecommunication Rooms	November 2016	November 2014	SBA-C Telecommunication Rooms
5.4.1 Requirements for Telecommunications Rooms in UMHHC Facilities			SBA-C-H: Requirements for Telecommunications Rooms in UMHHC Facilities
5.5 Custodial Support Space and Infrastructure	January 2018	May 2003	SBA-D Custodial Closets
5.5.1 UMHHC Custodial Closet at UMHHC Facilities			SBA-D-H: Requirements for Custodial Closets in UMHHC Facilities
5.6 Parking Structures	October 2009	June 2009	SBA-E Parking Structures
5.7 Unit Sub Station Rooms	January 2016	October 2009	SBA-F Unit Sub-Station Rooms

5.8 Personal Rooms	April 2016	February 2013	SBA-G Personal Rooms
5.9 Tunnels	November 2015	November 2005	SBA-H Tunnels
5.10 Gender Inclusive Rooms	November 2017	August 2016	SBA-I Gender Inclusive Toilet/Locker Room
5.11 Fire Command Center	September 2016	June 2015	SBA-J Fire Command Center
5.12 Lab Design and Safety	December 2014		
5.13 UMHHC Healthcare Procedure Room Infection Control Types and Requirements			SBA-K-H Healthcare Procedure Room Infection Control Types And Requirements
5.14 UMHHC Patient Care and Support Spaces Room Type Requirements			SBA-L-H Patient Care And Support Spaces Room Type Requirements
5.15 UMHHC Patient and Staff Protection: Falls, Bariatrics, Low Vision, Ergonomics			SBA-M-H: UMHHC Patient and Staff Protection: Falls, Bariatrics, Low Vision, Ergonomics

© 2018 Regents of the University of Michigan
Design by Michigan Creative
326 East Hoover, Ann Arbor, MI 48109-1002
Phone: (734) 763-3020
Contact Us

DESIGN GUIDELINE 5.2
ANIMAL FACILITIES

Scope

Obtain approval of the Provost's Office and Office of the Vice President for Research (OVPR) for all new animal facilities. Secure the written approval of the Provost's Office (Vice Provost for Academic and Budgetary Affairs) prior to finalizing program documentation. It is the responsibility of the unit requesting such spaces to obtain approval prior to initiating design activities.

In addition to the requirements of this Guideline, comply with the American Association for the Accreditation of Laboratory Animal Care (AAALAC) and the National Institutes of Health (NIH) criteria for the housing, handling and caring of laboratory animals. If a conflict should arise during the design of a specific project, the requirements of AAALAC and NIH will typically take precedence. Consult with the Design Manager who will coordinate with University Committee for the Use and Care of Animals (UCUCA) and the Attending Veterinarian (AV).

The Enforcing Agency for Animal Facilities is the UCUCA, which includes the University's AV. Design Manager will arrange for consultations with the UCUCA Office and the AV early in Schematic Design.

Related Sections

U-M Design Guideline Section:
4.7 SBA Building Access Control
6.0 DG 230030 - Laboratory Ventilation
6.0 DG 263000 - Engine-Generator System

Reference Documents:
"Guide for Care and Use of Laboratory Animals" , promulgated by United States Department of Health and Human Services, and the Regulations of the Federal Animal Welfare Act 9, CFR Parts ,1 2 and 3

Project Documents

Eliminate sensitive terms from the project drawings, specifications, and other review and bidding documents. "Sensitive terms and descriptions" include both specific and general information regarding the animal species and research activities conducted in animal facilities. Appropriate terminology includes research laboratory, support space, procedure room, operating room, clean and/or dirty room, housing, etc. Consult with the Design Manager early in the design process to review terminology requirements.

Location

Separate animal suites including procedure rooms from offices and main pedestrian corridors to discourage unauthorized access and to mitigate odors.

Animal areas need to be secured with access restricted to only authorized personnel. Provide access control system connected to Campus or Hospital central system depending on the location of the facility.

Determine whether a closed circuit TV system is needed for the facility being designed.

Wherever possible, provide ready access to an elevator that can be segregated and secured from the public for the transportation of animals, cages, feed, bedding, waste, etc. Determine whether a dedicated elevator is required for the facility.

Do not locate the animal suite above electrical rooms, telephone/data rooms, or other rooms that could be damaged if water leaks down after wash-down of the animal rooms.

When positioned along a perimeter wall, do not install exterior windows in animal rooms.

House noisy species apart from other quieter species. Consider impacts of building environmental noise when locating individual species housing and procedure areas.

Strategically locate support areas (including but not limited to food and bedding storage rooms, hazardous agent storage rooms, clean and soiled cage holding rooms, cage washer rooms, refuse rooms, animal care equipment storage rooms, and animal care personnel lavatory, shower and locker rooms) to isolate housing rooms from rooms requiring more frequent / less restricted access.

Corridors

Main corridors shall be 7 feet wide. Branch corridors shall not be less than 5 feet-6 inches wide.

Surfaces

Surfaces shall be constructed of materials that are waterproof and easily sanitized.

Use epoxy painted cement block walls, epoxy painted plaster ceilings, and smooth texture acid and solvent resistant monolithic floors with integral coved base . All pinholes must be filled.

Protect walls with guard rails.

In renovations of existing facilities, certain less-desirable features may be unavoidable. The following compromises are examples. Obtain permission from Design Manager for these and other deviations from stated requirements:

- Water-resistant gypsum drywall-on-metal-stud partitions.
- Vinyl-covered gypsum lay-in suspended ceiling panel ceilings in galvanized grid with hold down clips.
- Projecting items such as thermostats are undesirable, but if absolutely necessary, shall be protected with bumpers or guards.
- Exposed overhead pipes and conduits.If required, the penetrations shall be sleeved and sealed. All floor penetrations shall have sleeves and be sealed watertight.
- Above-ceiling devices requiring service or maintenance. If required, provide waterproof access panels. Utility valves should be located above the corridor ceiling.

Doors

- Size: 42 inches wide by 84 inches high minimum
- Type: Galvanized hollow metal. Review viewing window and related light control requirements with Design Manager.
- Configuration: Typically in-swinging into housing rooms; however, direction may vary based on code requirements and traffic flow. In some locations, closing direction should be coordinated with air flow direction..
- Hardware:
    - University Standard mortise digital combination lock.
    - Delayed action closer.
    - Door protection - armor plates and trim protection.
    - Tight fitting self-sealing neoprene sweeps or surface mounted automatic door bottoms.Avoid projecting thresholds for ease of cart traffic.

Ventilation Systems

See Design Guideline technical section, *Laboratory Ventilation* for vivarium ventilation requirements.

Environmental Controls

Individual room temperature shall be DDC and have local setpoint adjustment. Review temperature and humidity requirements with Design Manger and ULAM management early in design process. Temperature (and to a lesser degree, humidity) must be tightly controlled to setpoints on a year-round basis. This stringency must be accounted for in all future constructions and renovations of animal housing facilities.

Temperature and pressure within the room shall be monitored in the hallway, and contained in a flush-mounted panel. Temperature alarms should provide feedback to the U-M central BAS.

Lighting, Power, Data, and Fire Alarm

Typically, illumination should be dual level with a high level of 100 to 140 fc (measured at 36" AFF with all lights on) and a low level of 50 to 70 fc (measured at 36" AFF with one half of lights on). A manual one-hour timer located just inside of the room door, under a

waterproof cover, should control one half of the lights. The other half of the lights should be controlled by the U-M central BAS. Optical sensors (photocells) shall provide feedback to BAS for the trending of both room light levels. In special rooms, one half of the lighting may require red lamps or standard lamps with red covers.

Provide waterproof lighting fixtures to prevent entry of insects and water spray from wash-down hoses. Electrical receptacles shall have waterproof covers, and may need to be explosion-proof. Provide GFCI receptacles in all areas subject to wash-down or within 6 feet of sinks.

Provide data jacks with waterproof covers in each animal housing and procedure room. Provide sufficient wireless points for complete coverage of animal facility. Review wall phone locations with Design Manager.

Provide waterproof fire alarm devices in all areas subject to wash-down. For animal suites that house mice or other small rodents, the fire alarm audible sound shall be a Temporal Code 3 slow whoop with a peak frequency of less than 500 Hz. If the building is a high rise, the Code-required evacuation message shall also be less than 500 Hz. Contact the AEC Electrical Department through the Design Manager for the latest recommendation on audible devices. Fire alarm visual devices (strobe lights) shall be located in corridors only because animal rooms are not considered public or common spaces.

Standby Power:

Standby power may be critical to maintain animal health in a power outage, especially in locations using ventilated racks. Early in the design process, review the following considerations with the Design Team:

- Need for standby power including, how much power, how quickly, and for how long.
- Specific loads requiring power.
- Spare capacity of existing generators.
- Ability to add a generator, including available space, available fuel, and exhaust, noise and vibration impacts.
- Cost impact on the project.
- Alternatives, such as moving the animals elsewhere, connecting a portable generator to the building within a few hours, etc.

Plumbing

Animal rooms should have hot and cold water and a stainless steel wall sink with a drain board. Heavy water use areas should have hot and cold water hose bibs located under the sink.

Floor drains capable of being capped (4") are desirable in all rooms, but may be excluded in certain circumstances. Heavy water use areas shall have the floor sloped 1/4" per yard and contain rim-flush drains. Drains should have locking covers and contain a bucket trap.

Large animal rooms have special plumbing requirements (eg., trench drains, flush drains).

Determine whether an automated animal drinking water system is required.

Operating Rooms

Operating rooms cannot be used as offices, laboratories, or storage rooms.

Air from operating rooms shall be 100% exhausted. Supply and exhaust grilles must be located to provide proper airflow within an occupied room. Typically non-aspirating (perforated) supply air diffusers should be selected and located so that incoming air does not disturb the natural thermal plume that develops over the surgical site. The room shall be maintained at a positive pressure with respect to the adjacent preparation area or corridor.

Typically provide the following:

- Surgical light
- Easily sanitized surgical table
- Appropriate scavenging vacuum or alternate means of gas exhaust
- Plumbed oxygen from a central tank location
- Hot and cold water
- Explosion-proof electrical receptacles and conductive flooring if explosive anesthesia is used

Surgical Support Rooms

Provide at least 2 surgical support rooms separate from the operating room. One is for surgeon preparation, and the other for animal preparation. The former may also be used for instrument and pack preparation and the latter for post-operative recovery. However, prolonged and complex post-operative recovery should be performed in a recovery room separate from both the surgeon preparation room and the animal preparation room. The surgeon preparation room should be contiguous with the operating room; whereas the animal preparation room need not be. Provide an autoclave in close proximity.

DESIGN GUIDELINE 5.3
LOADING DOCKS

Scope

Provide Loading Docks as described below and in accordance with the program requirements.

Design and Installation Requirements

Provide space for refuse containers, trash compactors, and utility carts. The specific type of refuse container or compactor shall be reviewed with the Grounds Department through the Design Manager early in the design process. Provide access for the large 34 cubic yard trucks to service the containers.

Recycling containers shall be located within the loading dock area. Coordinate with facility manager to determine size, quantity and removal schedules.

At dining facilities coordinate with Housing and Dining Services for location of extractor and required storage. Typically located within loading dock area, these elements require significant coordination and planning.

Canopies which extend beyond the edge of the dock should be installed with a minimum clear height of 13'-6" above the driveway to ensure truck clearance under the canopy, lights etc. Preferred clearance height is 14'-0". Confirm the clearance with the Design Manager. If it is not possible to achieve sufficient height, a 6" diameter galvanized and painted steel tube shall be chain hung at the leading edge of the canopy to alert drivers to impending impact. The support structure of the heads of the dock openings which are exposed to potential impact shall be sized and stabilized to withstand the impact.

Provide an overhead dock door (motorized if noted in the program statement), and an adjacent person door.

Provide dock levelers and truck restraints were required.

Provide a storm sewer catch basin in the dock well.

Provide power and control circuits to motorized door openers, dock levelers, and trash compactors. Motorized overhead doors shall have operators easily accessible for maintenance, safety beam and sensing edge safety devices, and keyed control stations inside and outside.

Provide GFCI duplex receptacles for other general purpose needs.

Provide an outdoor campus or emergency telephone and/or a card reader as noted in the program statement.

Provide photocell controlled LED wall pack or downlight outdoors to light the dock area. Specify appropriate cut-off to minimize direct glare to vehicles and pedestrians.

Do not install fire alarm system control panels, security system control panels, time clocks or other electronic panels in the loading dock areas because of the potentially harsh environment and to avoid abuse from the materials being moved through the area.

DESIGN GUIDELINE 5.4
TELECOMMUNICATIONS ROOMS

Scope

Voice and data systems for the Ann Arbor, Dearborn and Flint Campuses are provided by the U-M Information Technology Central Services, ITSComm Department. Voice and data systems for University of Michigan Hospitals and Health Care (UMHHC) facilities are provided by the Medical Center Information Technology (MCIT) Division, but UMHHC projects often include ITSComm involvement as well.

Coordinate with ITSComm or MCIT through the Design Manager and provide telecommunications rooms as described below and in accordance with the Program Documents. On new building, building addition and total renovation projects, provide additional infrastructure for Emergency Responder Radio Coverage (ERRC) to enable communication between emergency responders at the exterior perimeter of the building and emergency responders within the building.

Related Sections

U-M Design Guideline Technical Sections:
6.0 DG 260513 – Medium, Low and Control Voltage Cables
6.0 DG 260526 – Grounding and Bonding for Electrical
6.0 DG 260533 – Electrical Materials and Methods
6.0 DG 272000 – Voice and Data Communications
6.0 DG 273523 – Emergency Responder Radio Coverage

U-M Master Specification Sections:
7.0 MS 260513 – Medium, Low and Control Voltage Cables
7.0 MS 260526 – Grounding and Bonding for Electrical
7.0 MS 260533 – Electrical Materials and Methods
7.0 MS 272000 – Voice and Data Communications

U-M Standard Details:
9.0 272000 Series - Telecommunications Details

Reference Documents:

ANSI/TIA/EIA-568-C	Commercial Building Standards for Telecommunications Cabling Standards
ANSI/TIA/EIA-569-C	Commercial Building Standards for Telecommunications Pathways and Spaces
ANSI/TIA/EIA-607-B	Commercial Building Grounding and Bonding Requirements for Telecommunications

Architectural Requirements

The Building Entrance (BE) room is the main termination point in a building for interconnecting cables external to the building (OSP cables) with cables internal to the building (ISP cables). A BE may also serve as a TR for the voice/data outlets in the nearby area. In addition, the BE may house voice/data racks, switches, routers, patch panels and terminations, an ERRC rack and headend equipment, and electrical equipment of other systems.

Telecommunications Rooms (TRs) are distribution and termination rooms that serve the voice/data outlets in the nearby area. In addition, TRs may house voice/data racks and equipment, ERRC node equipment and electrical equipment of other systems.

1. If the rooms will contain safety related systems or equipment, determine whether code requires the rooms to be separated from the remainder of the building by rated fire barriers.

2. Locate the BE within 50 conduit feet of the telecommunication service entrance to the building. If this is not possible, provide galvanized rigid steel conduits from the service entrance to the BE for the outside-plant cables.

3. Locate the TRs to allow for star distribution of cabling. Stack TRs vertically to provide short, direct, vertical paths for riser and network cables. See Standard Detail 27200001.

4. Provide a minimum of one TR per floor. Provide additional TRs to ensure:
   - One TR for every 10,000 square feet of floor area being served.
   - One TR for every 300 voice/data outlets being served.
   - The horizontal and vertical cable distance to the farthest voice/data outlet does not exceed 295'.

5. When providing for ERRC, design the BE to house an ERRC rack and headend equipment. Design one TR (two on floors over 25,000 square feet) on every other floor to house ERRC node equipment.

6. Size rooms according to the following rules:
   - Coordinate with ITSComm or MCIT to obtain the quantity and arrangement of voice/data and ERRC racks in each room. Assume each rack will be 8' tall by 32.5" wide (including side-mounted cable managers) by 36" deep. See Standard Detail 27200003 and include it on a drawing. Show the rack outlines on plan drawings.
   - Size the rooms to provide the National Electrical Code minimum working space of 3' in front, 3' in back, and 2' on one side of each rack.
   - Provide backboard-covered wall space for non-rack equipment including patch panels, terminations, and other electrical equipment. Comply with NEC minimum working space requirements in front of wall-mounted equipment.
   - In rooms designed for ERRC equipment, designate a 6' wide by 4' tall section of backboard for ERRC.
   - When a room is not square, the minimum short wall length shall be 8’.
   - Minimum size for the BE shall be 12' x 12'.

- Minimum size for the TRs shall be:
  - 12' x 12' for 10,000 square feet served.
  - 10' x 10' for 8,000 square feet served.
  - 8' x 10' for 5,000 square feet served.

7. Minimum room height shall be 9’-0”.

8. Leave the rooms open to the decks above. No ceilings are allowed.

9. Cover three walls from 6” AFF to 8'-6”AFF with ¾ inch Class B fire retardant plywood backboards (smooth side out). Backboards shall be rigidly installed. Do not paint backboards. The fire rating stamps must remain visible.

10. Paint or seal the floors. No carpeting is allowed. Provide vinyl tile flooring only when requested by ITSComm or MCIT.

11. Doors shall be 36" wide by 80" high minimum and shall swing outward. Doors should be located near a corner of the room, and shall have storage room function hardware. Doors shall not have door sills. Double doors shall not have center mullions.

12. When noted in the Program Documents, provide or prepare the doors for card readers and electrified door hardware.

Mechanical/Electrical Requirements

1. Ductwork, piping, and other mechanical system components are not permitted in a BE or TR unless they serve the room.

2. Provide the BE and TR’s with cooling 24 hours/day, all year around. Fan coil units located outside and ducted to the rooms are preferred. Room temperature shall be maintained between 68 degrees F (20 degrees C) and 77 degrees F (25 degrees C).
   - No room humidification or dehumidification is required.
   - Feed the cooling system with normal building power. The voice/data and ERRC equipment can operate at an elevated temperature during a power outage.

3. During project programming, assume an equipment heat load of 6,000 watts per room.
   - In rooms designed to house ERRC equipment, add 2,400 watts.
   - Add the heat loads of other electrical equipment in the room including uninterruptible power supplies (UPSs), fire alarm panels, security panels, card access control panels, CCTV panels, and Power Over Ethernet (POE) power supplies.
   - The resultant heat loads will be worst case. Confirm the heat loads during design and reduce the cooling to match the confirmed heat loads.

4. Provide chain-hung fluorescent fixtures to achieve a light level of 50 foot-candles minimum at 3 feet above the floor. Feed the lighting with generator-backed emergency lighting circuit when available. Otherwise, provide an emergency lighting battery pack fixture. Provide light switches. Time controls and occupancy sensors shall not be used.

5. Provide conduits and floor sleeves for telecommunication cables per Standard Detail 27200001. Conduits and floor sleeves shall be 4", shall extend into the room 4", shall be sealed water tight, and shall be fire stopped to match the wall construction. When providing for ERRC, provide 2 additional conduits or sleeves between the rooms for ERRC cabling. Provide spare conduits and sleeves for future use.

6. Extend cable trays a minimum of 6" into the room. Specify fire sealing of cable tray penetrations in fire rated walls using intumescent fire sealant bags or brick systems. Fire sealing shall be performed after cable installation.

7. Provide the following electrical power:
   - Dedicated 120 volt, 30 ampere, normal power circuits to NEMA L5-30R receptacles, and dedicated 120 volt, 20 ampere, normal power circuits to power strips on the voice/data racks. See Standard Detail 27200003.
   - If the BE is designed to house an ERRC rack, a dedicated 120 volt, 30 ampere, emergency power circuit to a NEMA L5-30R receptacle and a dedicated 120 volt, 20 ampere, emergency power circuit to a power strip on the ERRC rack. See Standard Detail 27200003.
   - Dedicated 120 volt, 20 ampere, normal power circuits to duplex receptacles 18" AFF and 10' apart on the voice/data plywood backboards.
   - In the BE and TRs designed to house ERRC equipment, two dedicated 120 volt, 20 ampere, emergency power circuits, each to a quad receptacle on the ERRC backboard.
   - One 120 volt, 20 ampere, normal power circuit to a duplex convenience receptacle on the wall near the door.
   - Coordinate all receptacle locations with ITSComm or MCIT.

8. Provide a 1" x 12" x ¼" thick copper ground bus bar in the BE and each TR. Connect it to the unit substation room ground bus bar and to the ground bus bars in the receptacle panels feeding the BE and TR receptacles. Use No. 6 AWG green insulated, stranded, copper ground cables. The resistance to building ground shall be 1 ohm maximum.

Division of Responsibilities

The following BE and TR equipment will be provided by others.

- Voice/data and ERRC racks and cable managers.
- Ladder-type cable racks above the voice/data and ERRC racks.
- Uninterruptible power supplies (when required).
- Telecommunication and ERRC equipment, patch panels, cables, splice boxes and terminations.
- Equipment of other systems.

2101 Commonwealth Blvd, Suite B
Ann Arbor, MI 48105-5759
www.med.umich.edu/facilities/plan/

5.4.1: UMHHC - TELECOMMUNICATION ROOMS (SBA-C-H)

General

This SBA documents all of the specific requirements for telecommunications rooms and like infrastructure for University of Michigan Hospitals and Health Centers (UMHHC) facilities. This document completely supersedes 5.4 in all UMHHC owned and long term leased facilities.

New buildings shall provide telecommunication infrastructure in full accordance with this document. Major renovations in existing buildings shall, when noted in the program statement, upgrade the telecommunications infrastructure also in full accordance with this document.

All voice and data systems services in UMHHC facilities are provided by the Health Information Technology & Services (HITS) Division of UMHHC. Also, in almost all cases, UMHHC projects include AT&T (under HITS separate contract) for wire pulling and similar services.

In some cases, U-M (Campus) Information Technology Services (ITS) also has involvement as well. In these cases, there will be specific notation in the project scope statement noting their involvement and to what degree.

Coordinate through the Design Manager for the specific HITS requirements for each project and provide telecommunications rooms as described below and in accordance with the Program Documents.

When more stringent, BICSI and ANSI/TIA guidelines supersede other guidelines.

Related Sections

Design Guideline Technical Sections:
1.0 – “Codes and Regulatory Agencies”
260500-H – “Supplemental Common Work Results for Electrical”
260526-H – “Supplemental Grounding and Bonding for Electrical”
260533-H – “Supplemental Electrical Materials and Methods”
260543 – “Underground Electrical Services”
260553-H – “Supplemental Electrical Equipment Identification”
272000-H – “Supplemental Voice and Data Communications”
273523-H – “Supplemental Emergency Responder Radio Coverage”
8.4 – “Electrical Preferred Manufacturers List”

References

ANSI/TIA-568-C	Commercial Building Standards for Telecommunications Cabling Standards
ANSI/TIA-569-B	Commercial Building Standards for Telecommunications Pathways and Spaces
ANSI/TIA-606-A	Administration Standard for Telecommunications Infrastructure of Commercial Buildings.
ANSI/TIA-607-A	Commercial Building Grounding and Bonding Requirements for Telecommunications
ANSI/TIA-758-A	Customer-Owned Outside Plant Telecommunications Cabling Standard
ANSI/TIA-1179	Healthcare Facility Telecommunications Infrastructure Standards
BICSI – TDMM	Building Industries Consulting Services International - Telecommunications Distribution Methods Manual.
ASHRAE	HVAC Applications, Chapter 19, 2011 – Data Processing and Telecommunications Facilities

UMHHC Definitions:

BE - Building Entrance
Building Entrance (BE) Room is a space that combines the functionality of two telecommunication industry standard spaces defined 1) Entrance Facility (also known as Main Distribution Frame -MDF) and 2) Equipment Room (also known as Main Telecommunications Room or Building Distribution Frame - BDF).

BE Room is the telecommunications service entrance to the building and main equipment room. This room is the main demarcation point for interconnecting cables external to the building (OSP cables) with cables internal to the building (ISP cables). It is a central space for telecommunications equipment that serves some or all building occupants. It contains the electronic equipment that transition between the core data, voice, and video backbones and the building backbone, patch panels, terminations, equipment racks, telephone switches, and other electronic equipment that servers the building.

TR - Telecommunications Rooms
Telecommunications Rooms (TR) are distribution and termination rooms that serve the user stations (work area outlet) in the immediate area of the TR. It is where the connections are made between the horizontal cabling to the outlets is made to the building vertical/backbone cabling occurs. TRs also house voice and data equipment, and auxiliary electrical equipment of other systems such as nurse call, fire alarm, etc.

Backbone (Riser) Cabling
The vertical cabling distribution system that provides connection between telecommunication spaces such as BE and TR.

Horizontal Cabling
The cabling between the TR and the Work Area (work area outlet) that carries voice, data and video signals.

Work Area Outlet
Any point of connectivity for voice/data/CATV and like services. These typically are at the user end (i.e. work area, desk, etc.).

Telecommunications Pathways
Conduits, cable trays or other supports with the sole purpose of carrying telecommunications cabling. Telecommunications pathways shall not be used by other low-voltage systems, including but not limited to: fire alarm, security systems, and or building automation wiring or air/vacuum tubes.

Outside Plant (OSP) Cabling
Telecommunications cabling and terminations primarily located outside the building footprint; including but not limited to copper and optical cabling, splicing and terminations, lightning and electrical protection, and work related to their construction.

Inside Plant (ISP) Cabling
Telecommunications cabling and terminations primarily located inside the building footprint; including but not limited to copper and optical cabling, splicing and terminations, lightning and electrical protection, and work related to their construction.

Outside Plant (OSP) Pathways
Telecommunications pathways primarily located outside the building footprint; including but not limited to conduits, maintenance holes, hand-holes and work related to their construction.

HITS
Health Information Technology & Services department provides information technology services to the entire UMHHC campus – Hospitals, on and off campus medical centers and the Medical School.

Auxiliary Electrical Systems

Auxiliary electrical systems include any number of non-power, commonly low voltage, electrically operated systems for functions such as fire alarm, security, building management (BMS), nurse call, intercom, and like systems approved by UMHHC/HITS

HITS Service Level for Telecommunications Rooms

Based on the area the TR serves and equipment installed within, each room is classified according to the below noted expected IT service availability and recoverability criteria. Design guidelines and this SBA will include specific power cooling and like infrastructure requirements for each service level. [Note: The response times noted below specifically relate to IT responses to failures. The infrastructure supplied to BE and TR rooms should be configured to allow building and operational personnel the tools and systems to respond in a similar manner.]

Bronze

Standard Class Service – Monday to Friday, 8 am to 5 pm operations.

Silver

Business Class Service – Monday to Saturday, 7 AM to 7 PM operations.

Gold

High Availability Environment – 24/7/365 operations.

Platinum

High Availability & Patient Safety Environment – 24/7/365 operations.

Note: As noted below, BE rooms typically are Platinum

General Requirements:

If not clearly stated in program statement, ask the Design Manager for the 'Service Level' standard required for the telecommunications infrastructure to be installed. For programing purposes, assume Platinum service level for inpatient & ambulatory surgery occupancy and assume Gold Service Level for outpatient / business occupancies. Building Entrances shall typically be considered Platinum Service Level.

Drawings shall clearly identify areas in each communication room dedicated for the IT services being installed as well as for each auxiliary electrical system being installed. Provide plans and elevations to clearly define location (typically wall space), heights, etc. to insure maximum available resource (space, etc.) is maintained for future changes.

Consider and show space (in plan views) for, working clearances needed for maintenance and operation, and code mandate clearances for all current and known future equipment planned for the room. Also provide and show the power and cooling infrastructure needed to support the entire room.

In existing buildings where a central UPS is present, and in new buildings where a building-wide UPS is part of the program statement, provide building UPS power for IT loads in communication rooms and emergency power for room cooling, lights and miscellaneous power. When noted in program statement, provide these also for major renovations. Where building wide UPS is not present, provide power to rack-mounted UPS systems of size and number defined by HITS

BE and TR shall be dedicated to this purpose with no other building services sharing the space.

If conditions allow the BE may be co-located with one TR room, when approved by HITS. When this is done provide a room sized for both functions.

Equipment, including racks, patch panels, cable management, etc. for each room to be specified by HITS for each project. Ask the Design Manager for the HITS specifications for each room.

See 272000-H for detailed specifications to each item below.

Architectural Requirements

1. Locate the BE where the telecommunication (OSP) cables enter the building and relatively close to the TRs. Preferably this is at or near the exterior wall of the facility. BE room should accessible for

deliveries (close to dock), away from potential sources of EMI, away from machinery that causes vibration such as air compressors, and away from sources of potential water leaks.

2. For in-patient buildings provide one BE and a hybrid TR/BE on the ground floor at opposite ends of the building. Bring telecommunication utilities to both rooms from separate sources.

3. For office buildings provide one BE on the ground floor.

4. Centrally locate the TRs to allow 'star' distribution of cabling to the user stations (work are outlets). Stack TRs vertically to provide short, direct, vertical paths for riser and network cables. (see Figure 1)

5. Provide a minimum of one TR per floor.

6. Provide additional TRs as required to ensure:
    a. The maximum cable distance from the patch panel to the farthest voice/data outlet does not exceed 90 meters (~295').
    b. One TR for every 1,152 voice/data outlets being served.
    c. One TR for every 10,000 gross square feet in in-patient buildings.
    d. One TR for every 15,000 gross square feet in office buildings.

7. These rooms shall be free of obstructions such as diagonal bracing, stairs, or other utilities. Infrastructure serving TR's & BE's shall be limited to that which directly serves the TR/ BE space. Do not place cooling and power equipment serving room directly above the IT racks and like equipment.

8. Coordinate with HITS to obtain the quantity and arrangement of equipment racks in each room. Show the rack outlines and needed working clearances on the plan drawings.

9. **BE** minimum size is based on the building gross square footage.

Building Gross Sq. Ft.	BE Sq. Ft.
Up to 20,000	130
20,001 to 50,000	140
50,001 to 75,000	200
75,001 to 200,000	240
200,001 to 400,000	340
400,001 to 600,000	390
600,001 to 900,000	430

10. **TR** minimum size for all service areas shall be 130 sq. ft.

11. The minimum short wall length for TR and BE rooms shall be 10', rectangular rooms are preferred.

12. Minimum room height is 9'-6" clear in entire room.

13. Leave the room ceilings open to the decks above. No ceilings are allowed. Fire-proofing of overhead steel shall be sealed and/or encapsulated behind drywall.

14. Seal all concrete surfaces

15. Paint or seal the walls and cover at least 3 walls from 12" AFF to 9' AFF with 3/4 inch Class B fire retardant plywood backboards (smooth side out). Backboards shall be rigidly installed and painted per 272000-H specifications.

16. Install anti-static vinyl tile on the floors, no carpeting or bare concrete is allowed.

17. Doors shall be 36" wide by 80" high minimum and shall swing outward. Doors should be located near a corner of the room, and shall have storage room function hardware. Doors shall not have door sills, and double doors shall not have center posts.

18. Provide card readers access with electric hardware sets (preferred), or electric strikes. Consult with Security on how to key each door.

Electrical Requirements

1. Provide fluorescent lighting per TIA/EIA-569-B Standard; typically, 8.5' high providing 50 vertical foot candles @ 3' AFF. Fluorescent lighting shall not be installed directly above equipment racks. Emergency lighting and power should be provided.

2. Provide manual switches for the lighting. Time controls and occupancy sensors are not allowed.

3. Floor sleeves shall be water tight and fire stopped. Provide spare sleeves and conduits for future use.

4. Extend conduits and cable trays a minimum of 3" into the rooms. Extend the tray to an area above the proposed location of the relay racks. Also provide a cable tray over the tops of all of the racks.

5. Supply BE & TR rooms, including lighting, with critical power (UPS & generator) when available within the building, unless otherwise specified. Cooling systems for these rooms shall be powered from emergency generator sources when generator power is in building, or part of program statement (UPS power not required).

6. If possible, locate the electrical panel serving the BE or TR room within the room (dedicated) or nearby to facilitate future modifications.

7. Provide the following power for each room at the equipment racks, unless specifically noted otherwise. For Platinum and Gold Service Level rooms see 'Gold and Platinum Service Level Requirements below.
    a) 1x 30A 208V Critical (generator backed up) L6-30R outlet.
    b) 1x 30A 208V non-critical or on a separate electrical branch L6-30R outlet.
    c) 1x 20A 120V non-critical quad 5-20R outlet.

8. Along all walls install 20A/120V general purpose duplex NEMA 5-20R electrical outlets every 6' at 18" AFF. This should be below the plywood backboard and not on emergency power. Auxiliary electrical systems accepted.

9. If generator power is available install on the walls covered with the plywood backboard 20A/120V quads 5-20R at 60" AFF.

10. Provide a 1/4" x 2" x 12" copper ground bus (Panduit GB2B0306TPI-1) in the BE, and each TR room; Bond each rack independently to the ground bar; Follow design guideline 260526-H.

Mechanical Requirements

1. Ductwork, piping, and other mechanical system components (water/gas/fuel/drain/etc.) are not permitted in or through these rooms unless they serve these rooms.

2. Room temperature and humidity shall be designed per ASHRAE Handbook, HVAC Applications 2011, Ch 19; 24 hours a day, 365 days a year, maintained between 65°F- 80°F/ max 55% RH, positive pressure.

3. Cooling capacity for TR rooms shall be based on a minimum HITS equipment heat load of 5,000 watts per 130 sq. ft. room; plus that of all current and planned auxiliary electrical system equipment.
    - Confirm projected heating loads with HITS during design phase. Load shall include rack mounted UPS units.

4. Provide emergency power for the room cooling system if emergency power circuits are provided in the space. The need for 24/7/365, high density, emergency powered cooling typically dictates the use of a packaged dedicated HVAC system (i.e. fan coil unit [FCU] or split DX) for each room. UMH's standard is to utilize a chilled water FCU when an emergency source of chilled water is available (i.e. process chilled water - PCHW).

5. Ideally the FCU shall be mounted outside of the room, typically in an adjacent corridor, and ducted into and out of the space. Provide minimum ventilation air off of the central AHU for each room. If the room is large enough, or if adjacent space is too limited, locate the dedicated FCU within the room, at the door. All piping serving the FCU within these rooms, including chilled water and condensate piping, and the fan coil itself, shall be provided with an auxiliary drain pan. Pan shall not impinge on maintenance of the FCU.

6. All TR/ BE rooms shall be remotely monitored and alarmed thru the DDC BMS by UMHHC Systems Monitoring. BMS shall monitor space temperature and alarm when space temperature is <65°F or >80°F. When a possible source of water leak exists in the room (i.e. FCU or water/ drain piping), provide a floor-mounted leak detector, located in the corner of the room out of the path of travel, integrated to alarm thru the BMS.

7. Route sprinkler piping over aisles, not directly over IT equipment. All exposed sprinkler heads shall utilize protective cages.

Bronze and Silver Service Level Requirements

All requirements stated above.

Gold and Platinum Service Level Requirements

1) All requirements stated above.

2) Provide the following power for each room at the equipment racks in-lieu-of those mentioned in lower service levels.
   a) 2x 30A 208V Critical (generator backed up) L6-30R outlets.
   b) 2x 30A 208V non-critical or on a separate electrical branch L6-30R outlets.
   c) 2x 20A 120V on separate branch circuits, one on generator one on emergency, quad 5-20R outlets.

3) Cooling capacity for TR rooms shall be based on a minimum HITS equipment heat load of 10,000 watts per room.
   a) Confirm projected heating loads with HITS during design phase. Load shall include rack mounted UPS units and non-HITS devices (CCTV amplifiers, etc.) where appropriate.

4) Cooling capacity for BE rooms shall be based on a minimum HITS equipment heat load of 20,000 watts per room.
   a) Confirm projected heating loads with HITS during design phase.

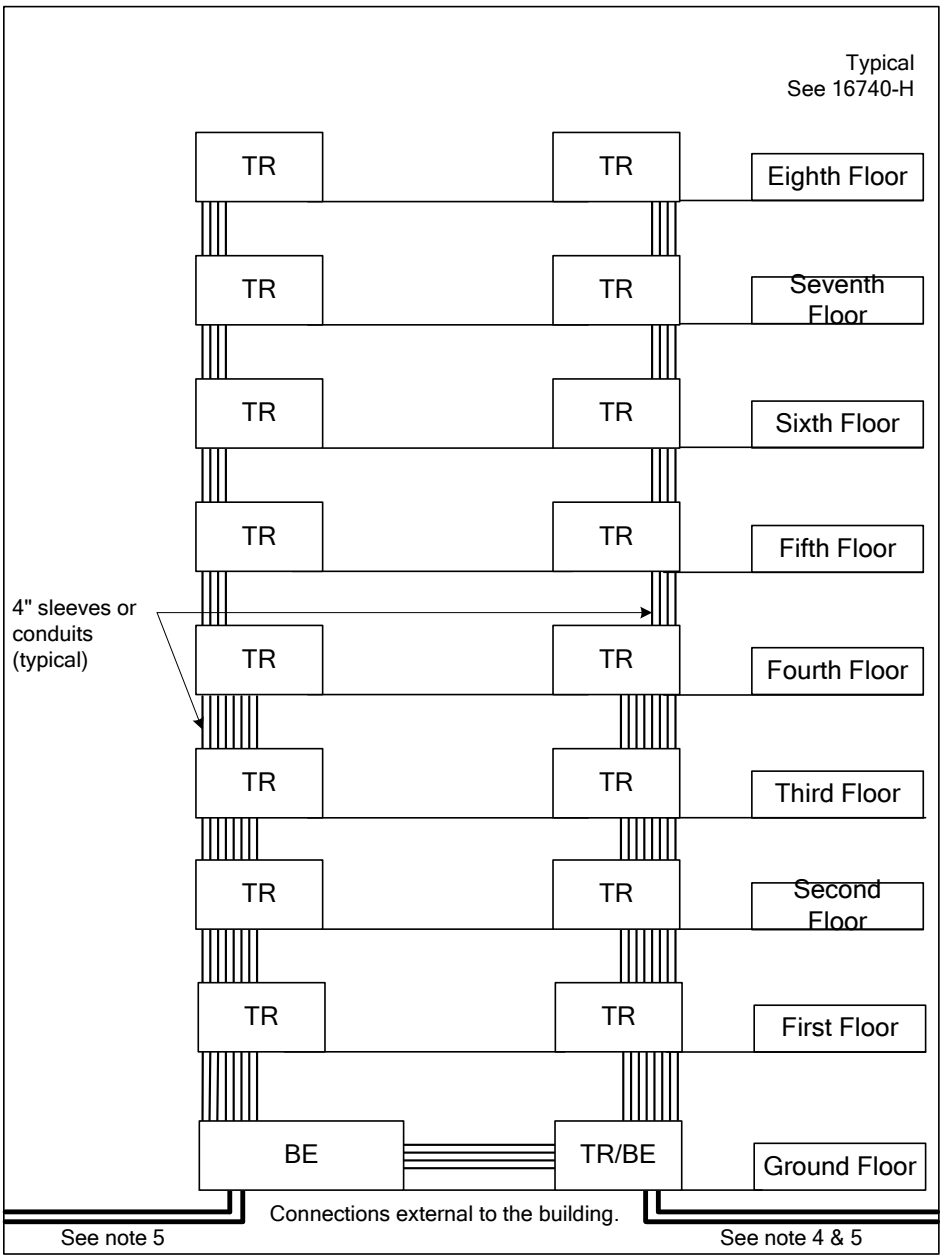

Figure 1 – Typical Building BE/TR Room Riser Diagram
No Scale

Notes:

1. The number of TR rooms per floor shall be noted above in paragraph 4. The above riser assumes a building with a floor area of more than 10,000 square feet, but less than 20,000 square feet.
2. The number of total risers will reflect the total area of the typically floor. I.e. a building with around 30,000 square feet would have three total risers, instead of the two shown above.
3. Each stack of TR rooms will be connected to the BE room as noted above.
4. The second OSP building entrance noted above, going into TR/BE room is required in buildings having Platinum service levels, and is highly desirable in buildings with Gold or Silver service levels. It is never required in buildings having Bronze service levels.
5. Provide 4-4” ducts for the OSP cabling, from the manhole or service point

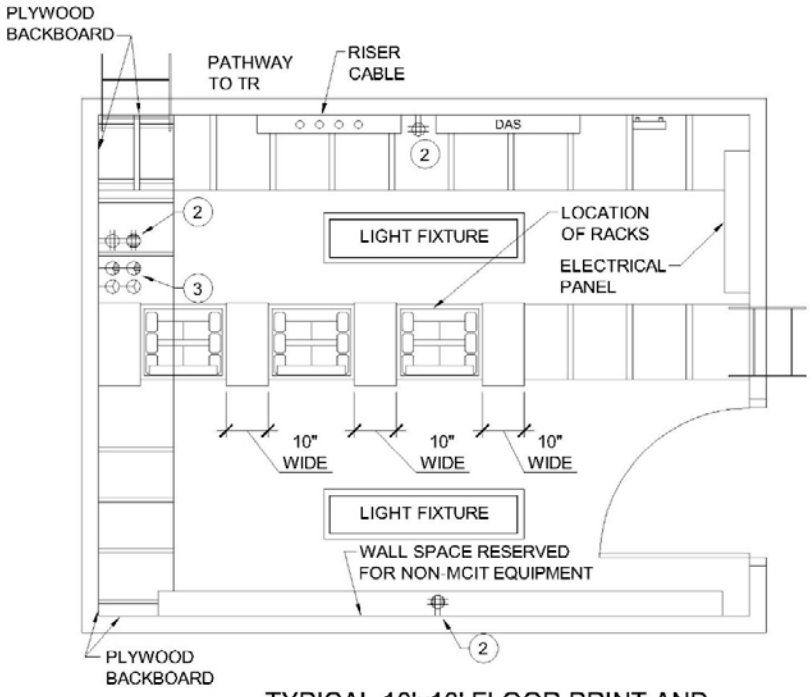

TYPICAL 10'x13' FLOOR PRINT AND LADDER RACK LAYOUT

0 1' 2' 4'

NOTE:

1. CONVENIENCE OUTLETS EVERY 6'-0" ARE NOT SHOWN.
2. ELECTRICAL QUAD RECEPTACLE 20/120V 5-20R.
3. ELECTRICAL SINGLE RECEPTACLE 30/208V L6-30.

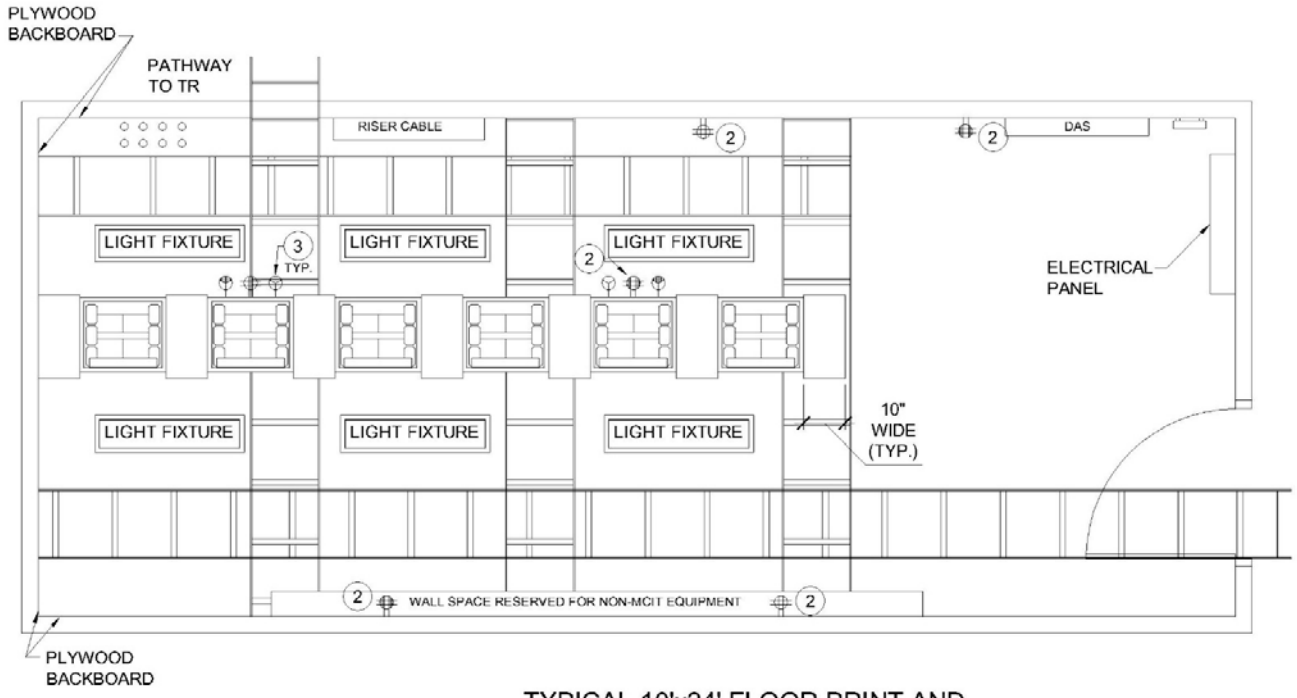

TYPICAL 10'x24' FLOOR PRINT AND LADDER RACK LAYOUT

0 1' 2' 4'

NOTE:

1. CONVENIENCE OUTLETS EVERY 6'-0" ARE NOT SHOWN.
2. ELECTRICAL QUAD RECEPTACLE 20/120V 5-20R.
3. ELECTRICAL SINGLE RECEPTACLE 30/208V L6-30.

DESIGN GUIDELINE SBA 5.5
CUSTODIAL SUPPORT SPACE AND INFRASTRUCTURE

Scope

Provide Custodial Support Spaces as described below and in accordance with the program documents. Scope also includes infrastructure requirements for outlet locations within facility to accommodate custodial staff.

Related Sections

U-M Standard Details:
Proposed layout Custodial Room
Proposed layout Custodial Suite

Design Requirements

Miscellaneous Outlet locations:

Labs: Provide 1 outlet on a separate circuit located at room entry, preferred below fire extinguisher, for use by custodial staff. Outlets from multiple labs can be circuited together. Intent is to provide outlet for custodial staff on a separate circuit from lab equipment. Provide label indicating "general maintenance use only".

Stairwells: Provide 1 convenience outlet on every other floor level for use of custodial staff.

Minimum Building Requirements for custodial support space:

Custodial Room - (approx. 100 s.f.) – 1 for buildings less than 90,000 s.f. optional plan layout.

- Provide lockers for employees, half size, able to hold a back pack and hang up coat.
- Equipment Storage cabinet 18" x 48"
- Restroom cart parking spot 24" x 48"
- Gondola storage
- Control cabinet 48" x 18" deep
- 24" x 48" wire shelving rack
- Trash Barrel w/ cleaning supplies 24"x24"
- Vacuum space 24"x24"
- Floor Sink 24"x24"
    - Provide eyewash over floor sink. Option: Wall mounted eye/face wash, ANSI Z358.1 compliant.
- Provide 42" out swinging door with store room lock function

Custodial Suite – 1 for buildings over 90,000 s.f. optional layout plan

- Custodial Office 120 s.f.
    - 1 data line for computer
    - 1 voice line
- Custodial Staging Room 200 s.f.
    - Supply cabinet 48" W x 18" D X 60" H metal, lockable, heavy duty
    - 2 data lines for shared computer workstation and timeclock.
    - Employee lockers, half height size, able to hold backpack and hang a coat.
    - Provide table and chairs based on crew size or designated conference room that can be utilized by custodial staff. Design Manager to coordinate.
    - Dry erase marker board
    - Bulletin board
    - Provide 42" door with kick plate on push side and storeroom function lock.

- Custodial Equipment Area 150 s.f.
    - 2 electrical convenience outlets on separate circuits for charging battery powered auto scrubbers and burnishers, outlets shall be 3 feet off floor
    - Provide wall mounted hooks, with support blocking, at 48" o.c. for vacuum back packs. Provide adjacent outlet (3 feet above floor) for battery charging.
    - Provide (4) GFCI duplex outlets, locate on walls 40" above floor.
    - Provide dedicated outlet for floor polisher equipment. DM to provide current equipment specifications.
- Custodial Bulk Storage 120 s.f.
    - 2 electrical convenience outlet, 40" o.c. a.f.f., 1 located near entry the other on opposing wall.
    - Chrome wire shelving unit, 4 shelves, 86"H x 60" W x 30" D
    - Laundry stacked unit – verify necessity with Design Manager

Pantry – 1 per every grouped mens and womens toilet rooms.

- Pantries shall provide storage for 1 month supply of paper products.
- Standard wire shelving rack 18" x 48".
- May be combined with Custodial Closet.

Custodial Closet – size 64 s.f., provide 1 per every 6,000 SF; 1 per floor recommended.

- Floor sink w/ backsplash (provide 1 per floor)
    - Service sink are to be floor type, precast, chemical and stain resistant receptors, 20" by 32" or larger, with an external sidewall depth of 6". Sinks shall include a 6' hose, a hose bracket, and a double supply spout no lower than 5' above the floor.
    - Provide eyewash over floor sink. Option: Wall mounted eye/face wash, ANSI Z358.1 compliant.
- Provide floor drain, in center of room, with the floor sloped a minimum of ¼ inch per foot toward the drain.
- 1 electrical, GFI type, outlet 36" above the floor by door
- Shelving Chrome wire unit 4 shelves, 63" H x 48" W x 18" D

- Provide out swinging door, 42” wide with kick plate on push side.

General Design Requirements for Custodial Spaces:

- Locate Custodial Room/ Suite with adjacency to loading dock.
- Doors to custodial spaces shall have store room lock function.
- Flooring shall be slip resistant, non-porous flooring.
- Walls- provide robust walls to withstand cart traffic. Surfaces shall be impermeable and washable from floor to 6’-0” above finished floor. Ceiling heights shall be minimum 8’-0”
- Provide out swinging door, 42” wide w/ kick plate on push side.

Custodial support spaces should not share spaces that contain mechanical equipment, exits to the roof, or equipment to which other personnel or building occupants must have access. The closets shall not contain electrical panels or any other electrical devices except for the lights and receptacles required for custodial tasks. Custodial support spaces can be combined where practical.

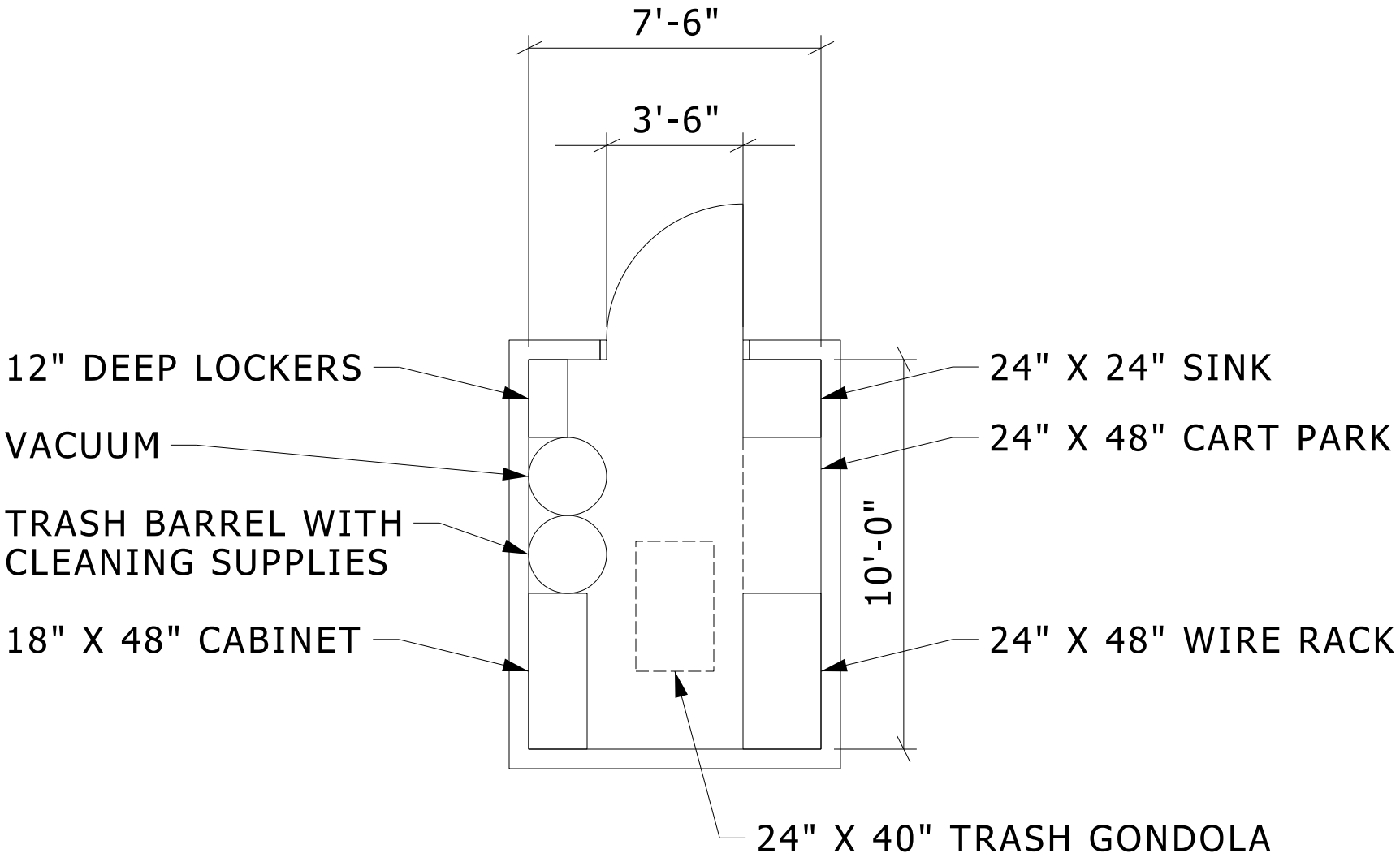

CUSTODIAL ROOM

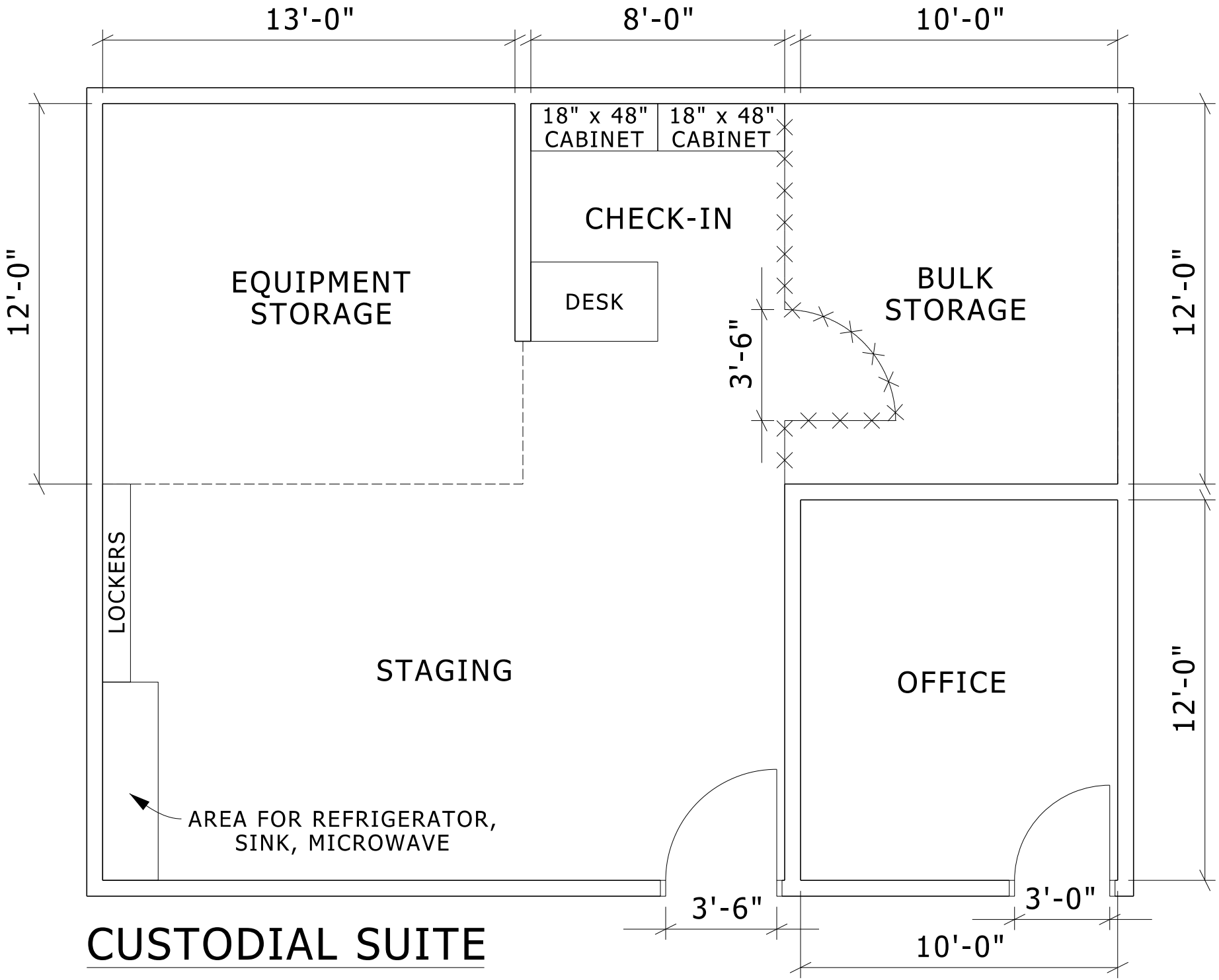

CUSTODIAL SUITE

2101 Commonwealth Blvd, Suite B
Ann Arbor, MI 48105-5759
www.med.umich.edu/facilities/plan/

5.5.1: UMHHC - CUSTODIAL CLOSETS (SBA-D-H)

Related Sections

This document lists the requirements for Custodial Closets in UMHHC Facilities.
For an explanation of the use of these guidelines, see "Design Guidelines for UMHHC Facilities"

General

There shall be one a minimum of one Custodial Closet per inpatient nursing unit; a minimum of one Custodial Closet per floor per outpatient clinical building, as required by code, and as dictated by the program.

The Custodial Closets shall include 4-6 coat hooks, with a duplex power receptacle adjacent to the coat hooks.

The doors shall swing out, shall be as wide as practical (min. 42" wide), and shall have stainless steel door and frame protection. Provide a classroom function lock.

Typically provide 30 linear feet of sturdy shelving for paper and cleaning products; additional shelving may be required depending on the program.

Provide a wall mounted hand sanitizer near the doorway.

The room must have a minimum width of 5'-0". Provide parking for (2) two 22" x 48" carts plus vacuum cleaner, mop bucket(s) and ladder(s). Review design for new rooms with Environmental Services Director.

Provide a minimum 24" square floor sink with rim guard, rough chrome plated brass faucet, wall mounted 36" above the floor with wall bracket, pail hook, vacuum breaker, wall mounted mop holding bracket, and 3'-0" rubber hose connected to hose end of faucet. In addition, provide a separate, dedicated non-potable CW connection for chemical mixing/ dilution, consisting of a 1/2" CW with hosebibb connection, fed from a RPZ backflow preventer racked on the wall, for ease of servicing. Mount hosebibb over mop sink. Provide sign over non-potable hosebibb indicating "Chemical Connection Faucet Only". Locate the sink close to the door, so that it is accessible without having to move carts out of the way. Provide location for rack of cleaning product concentrate bottles (typically four bottles) adjacent to the sink.

Provide adequate light, controlled by an occupancy sensor.

Provide room exhaust on a 24/7 basis.

Provide slip-resistant flooring with a fully sloped threshold at the door, and wall protection to 48" AFF, minimum. Provide full height corner guards.

DESIGN GUIDELINE 5.6
PARKING STRUCTURES

U-M Related Sections

Design Guidelines:
5.4 Telecommunications Rooms
5.7 Unit Substation Rooms
6.0 DG 140000 Elevators
6.0 DG 210000 Fire Protection
6.0 DG 260800 Basic Electrical Materials and Methods
6.0 DG 260513 Wires and Cables
6.0 DG 263000 Engine-Generator System
6.0 DG 265100 Interior Lighting
6.0 DG 265600 Exterior Lighting

U-M Master Specifications:
7.0 MS 142123 Electric Traction Elevators
7.0 MS 263000 Engine-Generator System
7.0 MS 261100 Unit Substation
7.0 MS 265600 Exterior Lighting

U-M PTS Specifications:
7.0 MS09912 – Parking Structure Painting (Obtain from Design Manager)

U-M Standard Details:
03410 Series – Bollard Details (Obtain from Design Manager)
10400 Series – Signage Details (Obtain from Design Manager)
16500034 – Riser for 480V Power Source
16750 Series – Emergency Telephone Details

General Design Requirements

The parking structure design shall incorporate the standard requirements of this Design Guideline and any Parking and Transportation Services (PTS) requirements unique to the structure.

The U-M Design Manager shall assume the responsibility for coordinating the transfer of additional information required by the design professional to and from U-M Departments.

Identify the parking structure as an 'Enclosed Parking Garage' or a 'Ramp Access Open Parking Garage' in accordance with Code. All separations from adjacent occupancies or structures shall be clearly identified.

Obtain approval from the City of Ann Arbor for all construction/impacts within the City of Ann Arbor right-of-way that support the parking structure.

Design parking structures to provide a 75 year life.

Driver visibility shall be free of blind spots at all turning points along the drive lanes.

Bumper blocks and wheel stops shall not be used.

Provide motorcycle designated parking outside of gate-controlled parking areas. Provide a dedicated entrance for motorcycles. Incorporate PTS requirements for multi-modal (bicycle, moped, etc.) parking.

Parking spaces shall be 90 degrees to the drive lanes. Each space shall be striped on the floor with 4 inch wide yellow stripes, and shall be a minimum of 8 feet 6 inches wide when measured from center of stripe to center of stripe. Provide wider spaces for special access vehicles per PTS requirements.

Provide ADA-compliant accessible parking spaces as required by code and PTS. Accessible spaces shall be striped in yellow (not blue). Accessible parking signage shall be furnished and installed directly by PTS. Do not paint accessible parking symbols on the deck.

Architectural Design Requirements

Structure

Structures shall have a live load capacity of 70 lbs./sq. ft. minimum. Provide a minimum additional 30 lbs./sq.ft. capacity at roof levels or meet the current Code requirement for snow loads, whichever is greater.

Structure decks should be constructed with precast or cast-in-place reinforced concrete double tees and 4 inches thick minimum top of tee, not including overlay. Both precast and cast-in place structural systems shall be evaluated during schematic design. Wherever cast-in-place concrete is used for beams, parts of the deck, or other horizontal elements, provide epoxy coated reinforcing steel.

Where precast construction is used, provide galvanic anodes at shear connectors.

Decks should have a clear span of at least 62 feet wide. At grade level and below and at levels with ADA parking, provide a minimum clearance of 8 feet 2 inches from the finished floor to the underside of any building component or pipe (including lighting fixtures and fire suppression sprinklers). Above grade level, provide a minimum clearance of 7 feet 6 inches to the underside of any building component and a minimum clearance of 7 feet 4 inches to any projecting or protruding object.

Decks shall have a protective overlay of 1-5/8 inches to 2 inches latex modified concrete or micro silica flume sand on top of the precast double tees. This overlay shall not be designed as a structural member, but as a protective overlay only, and shall be able to be replaced in the future. If a micro silica overlay is selected, provide a penetrating sealer (40 percent solids, silane sealer).

Ramped floors in the structure should not exceed a 6 percent slope where vehicles park adjacent to a drive lane, and then shall not exceed a 10 percent slope for speed ramps without adjacent parking.

Interior

Provide an enclosed lobby at each elevator landing.

Lobby and stairwell doors shall be unpainted aluminum with brushed finish and safety glass vision panels except as required by Code to be fire rated. Fire rated door assemblies shall be factory painted galvanized hollow metal with safety glass vision panels of the maximum allowable dimensions. Coordinate color with PTS paint specifications. Lobby and stairwell door hardware requirements are to be as follows:

- All doors shall have quarter panel kick plates (both sides of door) and closers.
- Exterior doors shall have panic device assemblies with locks and latches.
- Interior doors shall have push/pull hardware unless otherwise required by Code.
- Provide low energy ADA compliant door operators at all ADA accessible routes into and out of the structure. Evaluate other types of automatic operators that may be required for specific PTS applications.

Provide safety glazing in lobbies and all other areas required by Code. Window sills shall be no lower than 30 inches above the finished floor. Windows should be as large as practical to provide good visibility from the outside. Perimeter windows should utilize tinted low-E glass to minimize solar heat gain.

Evaluate public safety issues that exceed code requirements, such as security cameras in stairwells and exterior glazings that provide full viewing within stairwells.

Seal all floor penetrations water tight.

Where pre-tension or post-tension construction is used, provide cast-in-place or double-cored galvanized steel sleeves flush with floor levels and concrete-filled or covered. Provide block-outs or PVC sleeves for all wall and beam penetrations.

In general, the finish on all walls, columns, and ceilings shall be white per PTS Painting Specifications. Mechanical and electrical equipment, electrical conduits, and conduit expansion joints shall not be field painted. Mask all unpainted equipment to avoid overspray. Water, gas and fire system lines shall be painted.

Paint elevator shaft interior walls with white latex ceramic wall paint per PTS Painting Specifications to insulate the shaft against heat loss and moisture damage.

Painting of floors is not required, including stair landings, stair treads, and lobby floors. Concrete stair landings, stair treads and lobbies shall have an anti slip surface consisting of a quartz aggregate sealed with either polyurethane or methacrylate. PTS will provide aggregate color and finish.

Evaluate the use of traffic topping on exposed parking levels per PTS requirements.

Protect vertical pipes, conduits and valves from vehicle damage. Protection methods shall include either steel covers painted safety yellow or galvanized steel pipe bollards filled with concrete.

Provide movable precast concrete bollards for use in controlling traffic. See the U-M Standard Details for bollard requirements.

Provide a telecommunications room. Refer to U-M Design Guidelines for room specifications.

Provide a non-public ADA accessible toilet room on the ground level.

Provide a parking structure maintenance room, preferably on the ground level. Maintenance room minimum requirements are as follows:

- Room size minimum: 500 sq. ft.
- Room depth minimum: 18 ft.
- Roll-up door minimum: 9 ft. x 7 ft. (WxH) Obtain the door specification from PTS.
- Pedestrian Door: 42 inches wide.
- Plumbing: Utility tub and janitor's sink with hot and cold water.
- Power: 4 GFCI duplex receptacles and a separate 120 volt, 20 amp compressor circuit.
- Lighting: Ceiling fluorescent lighting with occupancy sensor control.
- Heat: Heater with wall mounted thermostat to maintain room above 45 degrees F.

Entrances/Exits

If parking controls (including electronic signage, attendant booths, gates, vehicle detection loops, and Automated Vehicle Identification (AVI) equipment) are to be provided, the equipment will be furnished and installed by others and directly through PTS. Provide concrete housekeeping pads, safety bollards installed in the pads, power and communications conduits and wiring, and lighting in accordance with PTS requirements. If no parking controls are to be installed, provide conduits for power and communications for the future addition of parking controls.

If attendant booths are to be provided, they shall be a minimum of 5 feet by 7 feet and located on 6 inch concrete housekeeping pads. At least one booth shall be ADA accessible. Incorporate PTS booth and bollard cover specifications.

The structure shall have illuminated pedestrian entrances away from the drive lanes.

Signage

Provide an illuminated facility identification sign at each entrance, LED type signs over entrance and exit lanes, and a clearance pipe above each entrance in accordance with PTS requirements.

Provide facility and level identification, directional, traffic and parking control signage in accordance with PTS requirements.

Mechanical Design Requirements

Elevators

Traction elevators shall be used. Hydraulic elevators shall not be installed in parking structures.

Provide a securable ladder with slip resistant rungs to access the roof of each elevator machine room. On machine room roofs, provide appropriate fall protection as required by Occupational Safety and Health Administration regulations.

Provide rigidized stainless steel wall panels and Class I fire-rated, slip-resistant rubber flooring in the elevator cars.

Elevator hoist ways shall be heated and cooled to maintain the temperatures specified by the elevator manufacturer. Elevator lobbies shall not be heated.

Heat and air condition elevator machine rooms to maintain an ambient temperature between 55 degrees F and 90 degrees F under all weather conditions. No heating or air conditioning equipment or piping shall be located in the machine rooms, except that which serves the rooms.

Provide stainless steel elevator door headers, frames, struts, and stainless steel or nickel-silver sills.

Provide floor drains in elevator lobbies, and slope floors downward from the room and elevator doors to the floor drains.

If the elevator(s) are considered part of the parking structure's "accessible path" or if the parking structure is classified by Code as a high rise structure, then the elevators, elevator HVAC, associated lighting and receptacles shall be connected to the emergency generator. Additionally, ingress and egress from and to the elevator and between the elevator machine room and the elevator must be "safe and reasonable" as defined by the Michigan Elevator Code.

Snow Melt System

Provide a snow melt system with the chute and control equipment on the roof. Provide a concrete housekeeping pad for the system and design the structure to support the additional weight.

The snow melt system shall be natural gas fired. Size the unit to service at least the entire roof level of the parking structure. Contact the system manufacturer for electrical, water, drainage and gas pressure requirements. Verify that required gas pressure is available. Connect a control panel "trouble" output contact to the DDC panel. Provide electric heat tracing for the water supply and drain lines that are exposed to air.

Enclose the snow melt system in a wire mesh fence with sliding gates for snow melt system operation and swing gates for personnel access to the control panel. Provide a level, skid-resistant path for personnel to safely access the control panel.

Natural Gas Service

Coordinate with the local utility to provide a natural gas service large enough to serve the snow melter, generator, and any additional equipment requiring natural gas service.

Ventilation

For structure levels that require mechanical ventilation to control CO levels, provide variable speed fans controlled by CO sensors. Connect CO "high-high" alarm output contacts to the Building Automation System DDC panel.

Evaluate the need for ventilation in glass-enclosed stairways.

Controls

Unless one is available in a close-coupled building, provide a Building Automation System Direct Digital Control (DDC) panel for connection to structure systems and equipment.

Additional Plumbing

Provide one standard hose bib on each parking level outside of stair and elevator towers. Hose bibs shall be drainable for winter.

Drainage

Provide positive drainage on all decks. Provide trench drains at the bottom of ramps from the plaza or roof levels.

Drain lines shall be 4 inch minimum and shall be heat traced where exposed to air.

Elevator and stair tower roof drains shall discharge to storm drains via lines located inside of lobbies or the parking structure. Downspouts shall not discharge directly onto the roof level floor deck.

Contact the City of Ann Arbor or other Authorities Having Jurisdiction to determine sanitary and storm water drainage restrictions and requirements. These requirements may include installation of an oil separation system.

Fire Protection

Provide drainable standpipes with 2½ inch fire hose connections on each level at each egress stairway, with additional standpipes located throughout the structure such that all portions of the structure are within 100 feet of a standpipe hose connection, or as otherwise required by Code.

Standpipe risers shall be painted red. One column immediately adjacent to each standpipe hose connection shall be marked on each side with a 6-inch wide strip of reflective red tape running perpendicular to the floor, from floor to deck, and the top 24 inches of the column should be painted red. It is not necessary to mark columns located inside enclosed stairways.

Provide a fire department connection for the standpipe system as required by the Code and NFPA 14. The fire department connection shall face the street, and shall be located within 100 feet of a fire hydrant. The fire hydrant shall be located such that a temporary meter, valve, and hose assembly can be connected for use by PTS for cleaning of the structure in accordance with City of Ann Arbor requirements.

For structures that require fire protection sprinklers, provide a dry pipe system. If available, plant air should be used to pressurize the dry pipe system. The dry pipe sprinkler valve and air compressor (if needed) should be located in the maintenance room. Provide a sprinkler system electrical failsafe contact that open if the system becomes charged, and connect it to the DDC panel.

The fire protection system shall be designed with the capability of draining down a charged system into the sanitary sewer/oil separation system for proper disposal of water.

All exposed control valves for the fire protection system shall be lockable or within lockable tamper resistant boxes.

Electrical Design Requirements

Lighting

Provide the following horizontal light levels on the floor:

Area	Minimum	Average
• Egress routes while on emergency power:	Per Code	Per Code
• Interior drive lanes and parking spaces:	3fc	5fc
• Uncontrolled and unattended entrances/exits:	5fc	10fc
• Vehicle entrances and exits:	10fc	25fc
• Stairways and lobbies:	10fc	25fc
• Maintenance room:	10fc	25fc
• Top deck:	1fc	2fc

Note: Deviations from the light levels listed above may be necessary to meet the lighting power density (watts/sq.ft.) restrictions of ASHRAE 90.1-2007.

Light reflectance from painted ceilings and walls shall be used during calculation of lighting levels.

Provide light levels in elevator lobbies, cars, machine rooms, and pits in accordance with the Michigan Elevator Code.

Normal lighting should have an average-to-minimum uniformity ratio of not more than 4:1, and emergency lighting should have an average-to-minimum uniformity ratio of not more than 10:1. Deviations from these ratios may be necessary to meet restrictions set forth by ASHRAE 90.1

Provide exit signs to direct traffic toward exits and pedestrians toward stairs and pedestrian exit ways. Exit signs shall be vandal-resistant LED type. Do not provide battery-backed exit signs.

Select lighting fixture cut-off to minimize direct glare into driver's eyes and to limit the amount of light exiting the structure.

Fixtures shall be vandal-resistant, UL listed for wet locations, with gasketed, high impact polycarbonate lenses secured with vandal-resistant screws, and cold weather ballasts.

Fixtures should operate at 277 volts. Do not provide battery-backed emergency lights.

Evaluate use of the following fixture types. Obtain the currently approved fixture manufacturers and models from PTS.

- 4 foot fluorescent vandal resistant wraparound fixture. Fixture to be surface or pendant mounted, with two or three 32 watt, 3500 degrees K, rapid start, T-8 fluorescent lamps and cold weather (0 degree or lower) electronic ballast. UL listed for wet locations.

- Induction lamp parking garage type, surface or pendant mounted, with 3200-3500 degrees K, 80 CRI lamp rated 100,000 hours, and electronic ballast.

- Solid state lighting (SSL) fixtures. Note: LED lighting is an emerging technology and should be evaluated as appropriate fixtures become available.

- Obtain PTS approval of the fixture type selected.

Lighting fixtures in stairways, lobbies, and elevators shall be vandal-resistant fluorescent with 3500 degrees K lamps and cold weather rated (0 degrees F or less) electronic ballasts.

Lighting in stairways, elevator lobbies, maintenance rooms and the substation room shall be connected to emergency circuits.

Lighting fixtures shall be cord and plug connected, with cords secured to conduits. Provided photometric requirements can be met, lighting fixtures over parking spaces should be located at the drive lane end of the parking spaces such that the fixtures can be repaired or replaced even if parked vehicles are present.

Lighting fixtures on the roof deck shall be metal halide or the latest PTS-approved emerging technology, shoebox type, mounted on round, tapered, hinged, aluminum poles to allow lowering the fixtures for maintenance. Refer to U-M Master Specification 16521 for additional requirements. Minimum lighting levels shall be maintained, but fixture wattage and pole height may be reduced to minimize light trespass on surrounding areas.

Lighting Controls

Circuit the interior deck lighting fixtures in rows that parallel the outer walls. Provide daylighting controls to turn off rows of lights near the outer walls when the incoming daylight is adequate.

Provide photocell controls to turn off the top deck lights when the daylight is adequate.

Provide daylighting controls in lobbies and stairwells exposed to natural daylight to turn off unneeded lights when the incoming daylight is adequate.

Power

Provide an indoor, single-ended, 13.2 kV–480Y/277 volt unit substation utilizing U-M Master Specification 16315. Locate the substation on a 4 inch minimum concrete housekeeping pad in a separate room complying with Design Guideline SBA-F. Exception: If the parking structure is close coupled to a building having sufficient power to serve the parking structure, a secondary voltage feeder may be utilized. If this is done, the feeder shall have a separate meter installed of the type specified in Master Specification 16315.

Provide a natural gas fueled engine-generator in accordance with Design Guideline 16231 to supply emergency power. Propose a location indoors in a room or outdoors in an enclosure for approval by PTS. During schematic design, evaluate sizing the generator large enough to provide power to all lighting in the structure to avoid the costs of separate emergency lights, multiple automatic transfer switches, and two conduit and wiring systems.

Provide one 120V GFCI duplex electrical outlet in the elevator lobby on every level. Provide a hinged, lockable cover on the outlet.

Raceways

Conduit should be exposed, except conduits to parking controls and attendant booths shall be embedded. Horizontal conduit runs below structural beams and vertical conduit runs should be located near columns and away from drive lane areas. Conduits located where they may be struck by vehicles shall be guarded.

Exposed conduits shall be Schedule 80 PVC and embedded conduits shall be Schedule 40 PVC, both with matching fittings, expansion fittings, and weatherproof junction and outlet boxes. Structural support channels shall be fiberglass with fiberglass or stainless steel hardware.

Exposed ½" and ¾" conduits shall be strapped to the structure with Carlon "Snap Strap" sliding clamps every 3 feet maximum. Exposed 1" through 2" conduits shall be strapped to the structure with Carlon "Snap Strap" sliding clamps every 5 feet maximum. Conduits 2" and smaller shall not be suspended on hangers. They shall be installed so no gaps exist between the conduits and the structure large enough for someone to grip the conduits and pull them down.

Exposed conduits larger than 2" shall be strapped with standard 2-hole PVC clamps, but the clamps shall be spaced off of the structure or hanger by a nylon or PVC washer under each hole of each clamp. The washers shall be thin enough so the 2-hole clamps continue to provide conduit support, but thick enough so the conduits slide through the clamps during conduit expansion and contraction.

Expansion fittings shall be provided in sufficient quantities to accommodate the expansion and contraction of a 120 degree F temperature change. Expansion fittings shall be provided within 3 feet of lighting fixtures and within 5 feet on both sides of bends and elbows. Expansion fittings shall be installed expanded or contracted as appropriate for the specific temperature existing at the time of installation.

Drain holes ¼" in diameter shall be drilled in the bottom of exposed junction and outlet boxes.

Fire Alarm

Provide a fire alarm system only when and where required by Code. Provide fire alarm devices that are UL listed for the environment in which they will be located.

Fire alarm junction boxes, covers and fittings shall be painted red or installed in red conduit throughout. Exception: The fire alarm raceways exposed in finished areas may be painted to match wall color.

Sprinkler system water flow and trouble alarms must be monitored in accordance with Design Guideline 16720. In parking structures without a fire alarm system, the sprinkler water flow and trouble alarms shall be monitored directly through the campus MOSCAD system. Monitoring of water flow and trouble alarms in Hospital parking structures by the UMHHC Facilities Control Center may also be acceptable, in accordance with direction received from the Design Manager.

Emergency Telephones, Elevator Telephones, and Data Connections

Provide DDC monitoring and alarms in the BAS Operations Center for snow melt system trouble, exhaust fan running and shutdown, CO "high-high" level, VSD trouble, generator running and trouble, automatic transfer switch transfer to generator power, loss of natural gas pressure, sprinkler system water flow and trouble, heat tracing trouble, and trouble from any other mechanical or electrical systems.

Provide U-M standard wall-mounted emergency telephones with integrated blue lights. Kiosk-style telephones shall not be used. Provide power and communications conduits and wiring for the emergency telephones. The lights operate on 120V power. Consult the U-M Standard Details. Some redesign may be required because the existing standard details may not always apply. Installation locations shall provide for maximum visibility and accessibility.

Provide one communication line for each elevator that will serve as the emergency telephone service from the elevator to an outside monitored source. In addition, provide one telephone line for use as a modem line for each group of elevators. All communication lines must terminate in junction boxes in the elevator machine room.

Provide conduit and cable from the telecommunications room for data circuits to be used for gate control systems, programmable signage and other applications.

Provide conduit and cable from the telecommunications room to the substation for recording power meter communications.

DESIGN GUIDELINE 5.7
UNIT SUBSTATION ROOMS

Scope
This guideline applies to rooms that contain unit substations. The guideline covers basic design requirements for associated architectural, mechanical and electrical systems.

Related Sections

Design Guidelines:
5.4 DG - Telecommunications Rooms
6.3 DG 260526 - Grounding and Bonding for Electrical
6.3 DG 260533 - Electrical Materials and Methods
6.3 DG 260543 - Underground Services for Electrical Systems
6.3 DG 260800 - Electrical Acceptance Tests
6.3 DG 261000 – Medium Voltage Electrical Distribution
6.3 DG 265100 - Interior Lighting
6.3 DG 283100 - Fire Detection and Alarm

U-M Master Specifications:
7.3 MS 261100 - Unit Substations
7.3 MS 261102 - Installation of Pre-Purchased Unit Substations

Reference Documents:
- International Commission on Non-Ionizing Radiation Protection (ICNIRP) Guidelines
- NESC, "National Electrical Safety Code"
- Michigan Building Code (MBC)

Architectural Design Requirements:
Separate the room from occupied spaces or provide sound-proofing so the 60 Hz hum is not audible to occupants (sound level of 40dB or less) in adjacent areas, including those rooms above and below the substation room. Sound proofing, if required, shall be solid sheet material. Spray-on and friable sound proofing material is prohibited.

Separate the room and large secondary feeder circuits leaving the room from areas containing computers, computer servers, telecom equipment, electronic instruments and other electronic equipment which could be affected by electromagnetic fields (EMF). University studies have shown that substation transformers and secondary feeder circuits 400 amps and larger can produce EMF of sufficient strength to impact nearby electronic equipment. If applicable, perform a study to determine the effects unit substations may have on adjacent sensitive electronic equipment.

Review locations of unit substations with University of Michigan Occupational Safety & Environmental Health (OSEH).

When the electrical service to the building is a medium voltage, loop style circuit, the substation room shall be design as a transformer vault as required by MBC. Provide fire rated walls and doors, extend the walls from the floor to the deck above. Required fire ratings shall apply to room floors, decks above and associated steel structure. Spray-on and friable fire proofing materials are prohibited.

Wall construction for substation rooms shall be reinforced concrete or CMU block (as a listed assembly). Stud and wallboard construction, expanded metal mesh, woven wire mesh or chain link fence are not acceptable for unit substation rooms.

Provide a minimum of 6 feet clear above the substation primary switches and secondary switchgear. Obtain Design Manager's approval of primary and secondary conduit and cable tray routes and installation details before providing less clear space above this equipment.

Exit doors shall swing outward from the room.

- Exit doors shall be equipped with listed fire exit devices, gaskets and bottom edge door sweeps. Door locks shall be keyed with High Voltage Shop series cores.
- One door shall be large enough for the passage of the largest shipping section of the substation. Typically, this means a minimum 8 foot tall by 7 foot wide double door with a removable mullion.
- Where two or more doors are provided, the other exits may be single doors. These doors should be a minimum 36 inches wide.

If floor drains are provided, slope the floor toward the drain. The floor drain shall be the low point of the floor.

Provide a 4 inch minimum housekeeping pad under each piece of floor-mounted equipment.

- Pads shall conform to the footprint of the equipment and shall be the full width and depth of the equipment, but shall not extend beyond the equipment by more than 4 inches. Pad edges shall be chamfered.
- Pads shall be smooth and level to 1/8 inch per 6-foot distance in any direction. Pads that fail to meet this criteria shall be corrected before installation of the equipment. Correcting deficiencies of an uneven pad by the use of leveling shims is not acceptable.

Provide 2 coats of water-borne epoxy paint over a compatible primer on the concrete floor and exposed portions of housekeeping pads. Provide paint on the walls and ceiling.

Provide a 10 pound Type ABC fire extinguisher at each exit.

Provide an unobstructed route to the building exterior to permit replacement of the largest shipping section of the substation. Entire equipment access pathway, including egress route exterior door, and all intervening doors shall have free and clear area that complies with size requirements for substation room doors listed above. Interior intervening doors/frames and other secondary systems constructed to be easily removable are an acceptable alternative. Design the floor of the entire route for the weight of the largest transformer.

Mechanical Design Requirements

Access to unit substation rooms is limited to authorized personnel, making it difficult for others to perform maintenance inside the room. Avoid locating mechanical equipment including fans and fan coil units inside the room.

Ductwork, piping, clean-outs, and other mechanical system components are not permitted in the room unless they serve the room.

Provide wet sprinklers if the building will be sprinkled.

- Locate the sprinkler heads and route the piping over aisles, not over the electrical equipment.
- Provide wire guards on the sprinkler heads.

Provide a pre-action sprinkler system, in substations rooms serving patient care facilities and the unit substation has been designated as 'essential' by UMHHC.

In below-grade substation rooms only, provide a floor drain at the low point of the room floor. Locate the floor drain in front or behind the middle of the substation and tight to the front or rear wall. Provide a backwater check valve for the floor drain. Locate the check valve outside of the room.

When a floor drain is provided, provide a water leak detector adjacent to the floor drain and tight to the wall so it isn't a trip hazard. The leak detector shall be outside of the working space of the substation. Connect its alarm contact to the nearest Building Automation System DDC panel.

Ventilation systems shall be designed for a year-around set point temperature of 70 degrees F (knowing the summer space temperature will rise to a maximum of 10 degrees F over outside ambient). Provide ventilation to remove equipment heat and maintain equipment within their ambient temperature ratings under all weather and electrical load conditions. Typically, provide supply and exhaust fans with variable speed control to maintain the set point temperature. Avoid supplying unheated outside air directly into the room, which can freeze sprinkler lines. Mix return air with outside air so that tempered air above freezing is discharged into the room.

- Design for a summer design space temperature of 10 degrees F over outside ambient.
- Base cooling load calculations on actual equipment heat rejection data and on the projected peak diversified load.
- Design the supply and exhaust to produce a slightly positive room.
- Filter the supply air to the room. Minimum filter efficiency shall be 65 percent.
- Air condition the room only if the room cannot be ventilated with outside air. If building chilled water is used, verify the chilled water system operates all year long.
- Heating shall be provided to maintain the room temperature to a minimum of 45 degrees F based on minimum substation loading.

Electrical Design Requirements

Do not locate ancillary equipment in the room; including power distribution panels, lighting and receptacle panels, central UPS systems, Building Automation System DDC panels, fire alarm control panels, security panels, or MOSCAD panels.

Do not locate emergency or standby power system equipment, including transfer switches and panels, in the unit substation room. Level 1 Emergency Power Supply System equipment shall not be installed in the same room with the normal power service equipment, per NFPA 110.

Provide a 1/4 inch x 2 inch solid copper ground bus bar on the wall behind each substation. Extend it the full length of the substation and mount it 18 inches AFF. Where not continuous, connect multiple ground bus bars together using #4/0 AWG copper grounding conductors. Do not wrap ground bus bars around the room doors.

- Connect both ends of each substation internal ground bus bar to its room ground bus bar using #4/0 AWG copper grounding conductors embedded in the housekeeping pad and floor. Connect the internal ground bus bars of other equipment to the room ground bus bar in a similar manner.
- For renovation projects only where the floor is not being cut, connect the substation ground bus bar to the room ground bus bar by routing the grounding conductors overhead.
- Connect the room ground bus bar with #4/0 AWG copper grounding conductors to all available grounds including the ground grid, concrete-encased foundation rebar, building steel, incoming water services, duct bank ground conductors, lightning protection ground rods, and the ground bus bars in other electrical rooms in the building. Grounding conductor to telecommunications main grounding bar shall be sized per DG 5.4.

Terminate the incoming primary duct bank with end bells that are embedded in and flush with the inside of the room wall, and as high off of the floor as possible. Slope the duct bank away from the room. If a duct bank must enter the room from below floor level, stub it up along the inside of the wall. Obtain permission through the UPE Primary Systems Engineer before stubbing ducts up into the bottoms of the primary loop switches.

Provide 36 inch wide aluminum ladder-type cable tray with 36 inch minimum radius fittings to route the primary cables up the wall and across the ceiling of the room. Locate the tray 3 feet minimum above the primary switches, but low enough to provide 24” clear above the tray to accommodate cable pulling. Provide cable tray roll-outs where the cables drop down into the primary loop switches.

Provide switched LED lighting in front of and behind each substation, and in front of other electrical equipment. Connect this lighting to emergency power. Provide a battery-backed lighting fixture or an emergency lighting battery pack in front and behind each substation. If emergency power is not available, provide battery-backed lighting fixtures or battery packs throughout the room.

Provide exit signs above the exit doors.

Provide warning signs outside of exit doors "DANGER - HIGH VOLTAGE - KEEP OUT" prior to energizing substations. UPE will furnish and install permanent warning signs at completion of construction.

Provide duplex receptacles and connect them to standby power.

Provide two hard-wired IT data connections to each substation.

To protect unit substation equipment from water damage by activation of the fire protection sprinkler system, provide fire alarm system, multi-sensor, smoke/heat detectors to give an early warning of a possible fire. Also provide one combination audible/visual appliance. Fire alarm system devices shall be installed in accordance with Specifications 283100, Fire Detection and Alarm System and/or 283102, Fire Detection and Alarm System (Hospital Projects).

Provide full size copies of the building's One Line Diagrams and Riser Diagrams on the wall in front of the unit substation. Drawings shall be minimum 24"x36", installed in wooden frames and protected by glass.

DESIGN GUIDELINE 5.8
PERSONAL ROOMS

General

During the programming phase for each new building or major renovation project, perform an assessment of the necessity of providing personal rooms for lactation, health needs and other special personal uses requiring privacy.

Consider the following:

- Projected staff, faculty, and student needs.
- Proximity and suitability of existing accommodations in adjacent buildings.
- If a single room is designated to meet multiple needs (lactation, health, meditation, etc.) consider compatibility of proposed uses.

Personal rooms are strongly encouraged in each building. If included in the project, locate personal rooms in a space that is not a restroom and is accessible to all building occupants. Space can be shared with other compatible program elements. Review access provisions and security requirements with Design Manager.

Minimum Standards for Personal Rooms

Personal rooms included in the project shall meet the following minimum standards:

- Door which can be locked from the inside and includes occupancy indicator. In collaboration with the Design Manager and user, review the specific operation of the lockset, including consideration if it should revert to locked or unlocked state if the latch is retracted.
- If room contains windows, provide blinds, shades or other accommodations to prohibit views into the room.
- Electrical outlets.
- Acceptable environmental requirements (heating, cooling, lighting, etc.) equivalent to what is provided in other occupied areas of the building.
- Size room to accommodate at least a comfortable chair and table (to be provided by client). Alternatively, provide a shelf, minimum 12" deep, in lieu of the table.
- Access to a clean sink. If a sink is not provided in the room, a clean sink should be available nearby.

Optional Features

Review the following optional additional amenities with the Design Manager:

- Sink.
- Additional electrical outlets and space to accommodate the following Owner provided equipment:
    - Small refrigerator
    - Microwave for sterilizing equipment
    - Electric breast pump.

- Telephone and data jacks.
- Signage which includes a sign-up schedule for the room.
- Electronic access control - keypad stand-alone battery operated unit or card reader connected to central access control system.

DESIGN GUIDELINE 5.9
TUNNELS

Scope

The University of Michigan central campus has an extensive array of tunnels used for distribution of utilities, primarily from the Central Power Plant. This section identifies key design considerations for tunnel related projects.

Related Sections

U-M Design Guideline Sections:
4.6 SID – Utilities for University Buildings

U-M Design Guideline Technical Sections:
221113 - Basic Piping Materials and Methods

U-M Master Specification Sections:
221113 – Piping Materials & Methods
220523 – Valves
220516 – Pipe Expansion Joints
220719 – Mechanical Systems Insulation
232216 – Steam & Condensate Piping Specialties
260533 – Electrical Materials & Methods

U-M Standard Details:
Tunnel Toolkit

U-M Utilities Tunnel Access/Use Protocol

General

All work in or near tunnels must be coordinated with the Utilities and Plant Engineering (UPE) – Tunnels Department, in conjunction with the U-M Project Manager.

All tunnel related projects shall be designed with long-term serviceability and maintainability in mind.

Phasing and sequencing is a primary consideration for virtually all tunnel projects, due to the fact that systems operate year-round and disruption to utilities directly impacts U-M's core mission. Proposed design alternatives should consider phasing and sequencing to minimize near and long-term interruption of utilities. Construction documents must clearly define phasing and sequencing requirements. Designs must incorporate all necessary work (valves etc.) to achieve this requirement.

Tunnel Types

Standard Utility Tunnel: Most of the tunnel system consists of racked utility piping on one side and a walkway on the other. Some include piping on both sides. Construction of existing tunnels includes poured concrete, pre-cast concrete, and brick. Typical dimensions are approximately 7 feet wide x 7 feet high, although size must be assessed on a project specific basis. Tunnel should be walkable, and allow for removal and replacement of valves, expansion joints etc. Tunnels are accessed through buildings or through sidewalk hatches.

Utility Tunnels Running Through Buildings: While most of the utility tunnel system is "outside", i.e., beyond the footprint of buildings, tunnel services continue through several buildings on campus. Special care is required in designing and installing these projects to ensure tunnel security is maintained, and to ensure piping is properly designed. Minimal connections should be made to the Utility main, typically one branch line per service for each building.

Box trench: Where cost of a standard tunnel cannot be justified, box trenches, and crawl trenches are occasionally used. Access and maintainability must be considered. Use of a box trench system for utility piping must be approved by UPE.

Direct Buried Piping Conduit Systems: Direct buried piping is used in some locations for utility piping. Use of a conduit system for utility piping must be approved by UPE.

Building (non-utility) Tunnel: Some buildings contain "non-utility" tunnels that fall within the footprint of a building and serve only the building it is under. Building tunnels should be treated the same as building mechanical rooms, and don't typically require coordination with the UPE-Tunnels department.

Tunnel Piping Utilities

The tunnel system was designed for the following piping utilities that emanate from the Central Power Plant: Low Pressure Steam, High Pressure Steam, Steam Condensate, Domestic Hot Water, Domestic Hot Water Return and Compressed Air. These utility systems are operated and maintained by the UPE – Tunnels department. The utility properties guaranteed at the the point the utility enters the building are defined in U-M Design Guideline 4.6 Utilities for University Buildings. Most pipe materials and design considerations for these utilities are described in referenced U-M Design Guidelines and Master Specifications listed above. Additional considerations within the tunnel system are noted below:

- While normally saturated, due to the fact that both the HPS and LPS are a byproduct of the co-generation steam turbines, these systems experience occasional temperature excursions. Temperature of the steam can reach 450F if the desuperheater fails. As such, all HPS and LPS piping in the tunnels shall be designed for expansion associated with an excursion temperature of 450F with duration of not more than one hour and not more than 80 hours per year. Cast iron, malleable iron, brass and bronze components are prohibited.

- Low Pressure Steam (LPS) –
  - LPS shall be designed for a Design Pressure of 15 psig. Operating pressure varies from roughly 6 psig to 12 psig depending on overall system load and location within the tunnel systems. U-M Utilities guarantees 6 psig operating pressure at building entrance.
  - U-M maintains a flow model for the LPS distribution, and as such, generally defines required pipe sizes for LPS piping in the tunnels.
  - Use stainless steel inverted bucket traps on LPS. Do not connect LPC from traps directly to the tunnel LPC system. Use condensate return unit to pump into the LPC main.
  - All LPS valves 2-1/2 " and larger shall be metal-to-metal seated butterfly valves.

- High Pressure Steam (HPS) – Design pressure of 80 psig.
  - Pressure Reducing Valves are used in some locations from the HPS system to the LPS system, for back-up and pressure maintenance during peak conditions. PRVs should be provided for critical buildings such as hospital, medical clinics, research labs, special use facilities and large scale housing. For buildings that do not fit these criteria, a business case may be made to Utilities by the building occupants for a PRV backup. For establishing the capacity of the PRV backup, 60% of total connected load is recommended. Associated relief valves should be routed to a safe location outside the tunnel. Where no safe location is available outside the tunnel, a code compliant tandem PRV station may be provided.
  - Use stainless steel inverted bucket traps on HPS. Do not connect HPC from traps directly to the tunnel LPC system. Use an LPS flash tank and condensate return unit to pump into the LPC main.
  - All HPS valves 2-1/2 " and larger shall be metal-to-metal seated butterfly valves.

- Steam Condensate Return (LPC)
  - The steam condensate is typically metered at individual buildings, and pumped into the LPC. While the system is under some backpressure at certain points, it is generally considered to be a low-pressure gravity return system. Do not directly connect LPC from building loads or drip and traps to LPC main. Use an LPS condensate return unit.
  - Drip and traps from HPS should not be routed directly to the LPC. Use flash tank and pumped condensate return unit.
  - Condensate return units (CRUs). A combination of electric and air pressure powered CRUs are used in the tunnels.

- (Domestic) Hot Water (HW) and Hot Water Return (HWR) - Design pressure 80 psig
  - Existing piping is primarily Type-L grooved copper piping using Victaulic fittings and peroxide-cured EPDM gaskets. U-M has an ongoing program to replace remaining steel piping with copper. Unless directed otherwise, use grooved copper piping for all HW and HWR in tunnels.
  - U-M has experienced numerous problems with expansion joints in HW and HWR systems. Refer to U-M Master Specification 220516 – Pipe Expansion Joints for current specification requirements.

- All flexible connectors on HW and HWR shall be of all stainless steel construction. Valves on HW and HWR shall be constructed of 316 stainless steel.
- All new buildings are required to have their own internal HWR system, typically with a small shell and tube heat exchanger and pump to reheat the HWR back to 120F. New building HWR connections to the tunnel are prohibited. For existing building connections, where practical, connections to the tunnel HWR system should be eliminated, and replaced with an internal return system. HWR system within the tunnel is designed only to keep HW within the tunnel within acceptable limits (roughly 120-125F)

- Compressed Air (CA) - operating at 90-100 psig (refer to DG 4.6 for clarification)
  - For building take-off, include two check valves installed in series to protect tunnel piping from possible contamination, and to protect the building compressed air loads from sudden loss of pressure if compressed air is turned off.

Other Piping Considerations

Piping Expansion and Stress Analysis:
For new connections to tunnel piping, analyze piping expansion and stress, and anchoring forces up to and including first anchor on either side of new connection. Provide pipe stress calculations to prove new and existing piping is not overstressed.

Three Valve Arrangements for Building Take-Offs:
In general, branch take-offs for individual buildings should include a three valve arrangement, to allow the building to be fed from either direction in the utility loop. Refer to Tunnel Toolkit for details.

B31 Requirements:
Refer to Master Specification Sections 221113 – Piping Materials & Methods and 232216 – Steam & Condensate Piping Specialties for welding requirements on utility piping.

Insulation:
Aluminum jacketing is required on all insulated LPS, LPC and HPS piping in tunnels. Refer to Master Specification Section 220719 - Mechanical Systems Insulation for materials and required thickness.

Other Piping and Utilities in Tunnels

Chilled Water (CHW):
Chilled water is not generally distributed via the tunnel system, although CHW piping is routed between buildings, through the tunnels in several areas. If routing of CHW through tunnels is approved by Utilities, additional insulation will be required.

Fire Protection Water:
In some locations, fire protection piping may be routed through the tunnels, especially where a fire pump is shared between buildings.

City Water, Sanitary, and Storm:
Beyond the building footprint, these services are generally owned and maintained by the City of Ann Arbor, and should not be routed through the tunnels without approval by the City and UPE-Tunnels. Coordinate modifications to these services with the City of Ann Arbor through U-M University Planners Office, U-M AEC Civil department and U-M Project Manager.

Architectural and Structural Requirements and Considerations

Load bearing capacity:
Tunnels shall be designed for H-20 (Highway) loading. In general, wall and roof sections should be a minimum of 8" thick reinforced concrete. Some older sections of the tunnel system do not meet this loading requirement and may need shoring where heavy loads must cross the tunnel. Confirm structural design requirements with U-M Project Manager.

Vaults:
Vaults are required in many areas at key junctions in the tunnel piping. Vault shall be designed to accommodate installation and maintenance of intersecting pipes, including flash tanks, condensate return units, etc. Provide a sump and simplex, high temperature sump pump at low point of each vault, discharging to sanitary.

Waterproofing:
Top and sides of tunnels should include waterproofing, typically membrane type. Coordinate with U-M Design Manager for waterproofing requirements.

Separation between Buildings and Tunnels:
Appropriate separation is required between buildings and tunnels. At a minimum, a lockable door is required at the tunnel (using U-M standard core). Fire rated separation is not typically required. Confirm separation requirements with U-M Project Manager.

Hatches:
Hatches are often required to maintain reasonable access to sections of the tunnel system. Location of hatches must be carefully coordinated with U-M project coordinator and UPE-Tunnels. In general, hatches must be designed to allow installation of 20 foot long pipe sections. All sidewalk or grade level exits will be equipped with a crash bar type opening mechanism and sufficient lifting assistance mechanisms to allow a worker in a diminished physical state to fully open the hatch with one hand. Include steel ladder at each hatch. Refer to Tunnel Toolkit detail.

General Requirements and Design Considerations

Coordination with City of Ann Arbor:
Work on tunnels is often affected by City of Ann Arbor requirements associated with right of ways, street closings and paving, etc. Review proposed concepts and issues with the City of Ann Arbor in early stages of design. Coordinate all contact with the City through the U-M University Planners Office, U-M AEC Civil department and U-M Project Manager.

Coordination with U-M University Planners Office, U-M AEC Civil department:
Coordinate soil erosion control, tree protection, and staging through the U-M University

Planners Office, U-M AEC Civil department and U-M OSEH department, in conjunction with the U-M Project Manager.

Tunnel Access and Confined Space:
The Tunnel Access/Use Protocols and Work Rules must be read and the Acknowledgment Form signed and returned to the Tunnel Supervisor prior to any personnel accessing the Tunnels. In addition, portions of the tunnel system are considered "confined space", and are therefore subject to associated U-M OSEH requirements.

Field Surveys:
Design must be based on actual field surveyed conditions. U-M has extensive records on modifications made in the tunnels. However, design must be validated by field inspection prior to release of construction documents.

Mechanical Requirements and Considerations

Ventilation:
Provide thermostatically controlled ventilation on all tunnel projects. Confirm ventilation needs with U-M Design Manager and Utilities. Tunnels are ventilated primarily with outside air, through the use of supply and/or exhaust fans. Kiosks are used extensively to house ventilation intake and relief. In some areas of campus, a more aesthetically sensitive alternative may be necessary. Design ventilation system to maintain no more than 115F, based on entering outside air at 90F.

Water Detection:
U-M is concerned about rapid detection and response to water leaks in the tunnel system, and has installed water sensors at several system low points. Confirm water detection requirements during design. Typically, install a water sensor at low point in any new tunnel section if any point in the new tunnel section is lower than the connection point to the existing tunnel. Water sensors should be connected to the Building Automation System.

Drains:
Tunnel system does not typically include floor drains, footing drains or sumps. However, a sump with a simplex high temperature sump pump should be installed at vaults and building entrances.

Electrical Requirements and Considerations

Lighting:
Lighting shall be designed to maintain a minimum light level of 25 FC at the walk surface. Fixtures shall be 24 watt minimum, compact fluorescent type, with globe glass and guard. Lighting should be controlled by 20 amp manual dial timer (12-hour) located at tunnel entrances, and at intervals of 200 feet.

Electrical Receptacles:
Duplex Receptacles are typically required throughout the tunnel system. Receptacles shall be 20 amp GFCI type with waterproof covers. They shall be installed at each tunnel entrance, and at intervals of 300 feet throughout the tunnel.

Cable Trays:
All tunnels shall include an aluminum ladder-type cable tray for future use for ITCom, and other services. Tray should be approximately 12" wide x 4" deep, with 9" rung spacing and 12" minimum bending radius, unless project specific requirements are higher. Tray should be located just outside the piping supports, near the ceiling.

Conduit:
Conduit in Utility tunnels, and box trenches shall be fiberglass-reinforced epoxy, or Schedule 80 PVC, with matching fittings. Provide expansion joints every 100 feet and on both sides of every change in direction. In utility tunnels that are completely dry, consult U-M Design Manager as to whether rigid galvanized steel conduit may be specified instead. Building tunnels (non-Utility tunnels) may use EMT conduit.

Fire and Smoke Detection and Alarm:
The Utility Tunnel system does not typically require a fire alarm system or notification appliances.

DESIGN GUIDELINE 5.10
GENDER INCLUSIVE ROOMS

Scope

Each new building or major renovation project requires the inclusion of at least one single occupancy gender inclusive restroom, as part of the project. Buildings that contain locker rooms, shower rooms, or other gender specific facilities shall include at least one single occupant, gender inclusive room for each function. Exceptions may be granted by Associate Vice President for Facilities and Operations, only under unusual, well-documented circumstances provided in writing by the unit or division funding the project.

Related Sections

U-M Design Guideline Sections:
6.0 DG 101400 Signage
6.0 DG 102800 Toilet Accessories
8.2 Architectural Preferred Manufacturers List

Design and Installation Requirements

Gender inclusive rooms shall be barrier free and located on a barrier free path of access. Construction documents and room signage shall label them simply by room function (i.e. “Restroom”, “Shower”, etc.).

Restroom: Locate at least one restroom so that it is convenient for the majority of building occupants. Signage shall include room name “Restroom” or "Gender Inclusive Restroom", room number, international symbol of accessibility, and changing table pictogram (if provided).

Locker room: Locate locker room near separate gender locker rooms and with equivalent access to adjoining rooms and facilities. Review quantity needed with Design Manager. Signage shall include room name “Locker Room”, room number, international symbol of accessibility, locker pictogram, and changing table pictogram (if provided).

Shower: Locate shower room near separate gender shower rooms and with equivalent access to adjoining rooms and facilities. Review quantity needed with Design Manager. Signage shall include room name “Shower”, room number, international symbol of accessibility, shower pictogram, and changing table pictogram (if provided).

Provide the following:

- Door with a privacy lock (lockable with thumb turn inside, single function for egress, keyed override, and room occupancy indicator)
- Equivalent amenities to separate gender facilities.
- Restroom:

- Water closet and lavatory as a minimum. Where other restrooms in the building provide showers, changing areas or other amenities, include those as well.

- Applicable restroom accessories. Consider additional accessories such as a baby changing station.

APPENDIX A: SIGNAGE STANDARDS FOR SPECIFIC ROOM TYPES

SINGLE OCCUPANT
RESTROOM
BARRIER FREE
CHANGING STATION

SINGLE OCCUPANT
RESTROOM
NOT ACCESSIBLE
CHANGING STATION

GENERAL NOTES

1. REMOVE WORD "ACCESSIBLE" IF NEAREST IS NOT ACCESSIBLE.
2. REMOVE INT. SYMBOL OF ACCESSIBILITY IF FACILITY IS NOT ACCESSIBLE.
3. PICTOGRAMS ARE LOCATED IN QUANDRANTS. IF A PICTOGRAM IS NOT NEEDED, DO NOT REARRANGE REMANING PICTOGRAMS.
4. ROOM NAME OPTIONS FOR SINGLE OCCUPANT ROOMS:
   "RESTROOM" (SHOWN)
   "GENDER INCLUSIVE RESTROOM"

GENDER INCLUSIVE RESTROOM SIGN STANDARD GUIDELINES

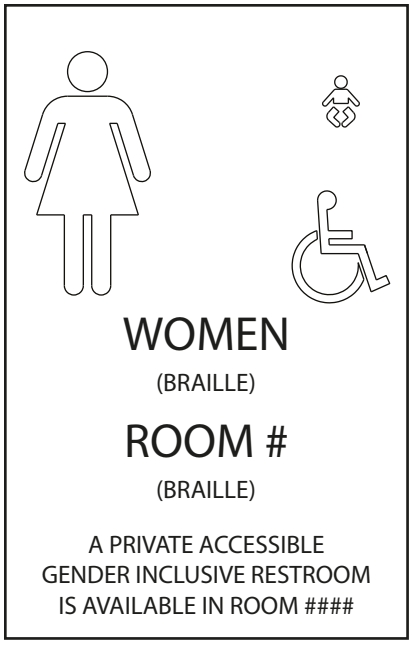

WOMEN'S RESTROOM
BARRIER FREE
CHANGING STATION

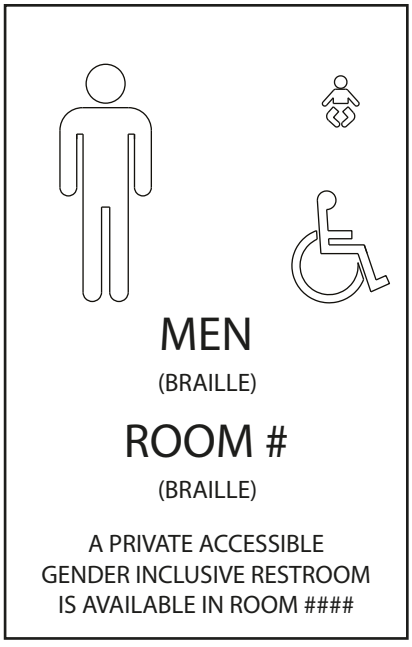

MEN'S RESTROOM
BARRIER FREE
CHANGING STATION

GENDER SPECIFIC RESTROOM SIGN STANDARD GUIDELINES

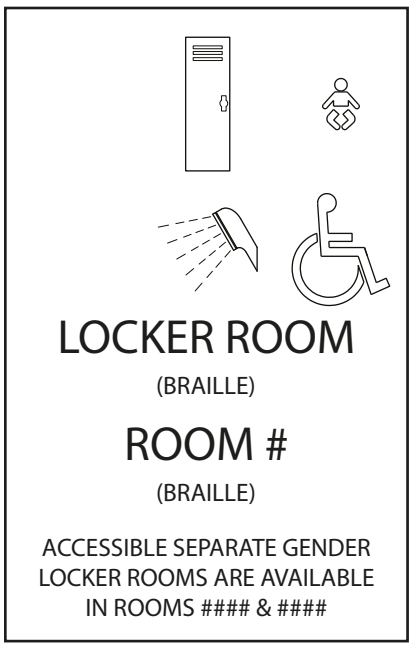

SINGLE OCCUPANT LOCKER ROOM
NO RESTROOM/SHOWER
BARRIER FREE
CHANGING STATION

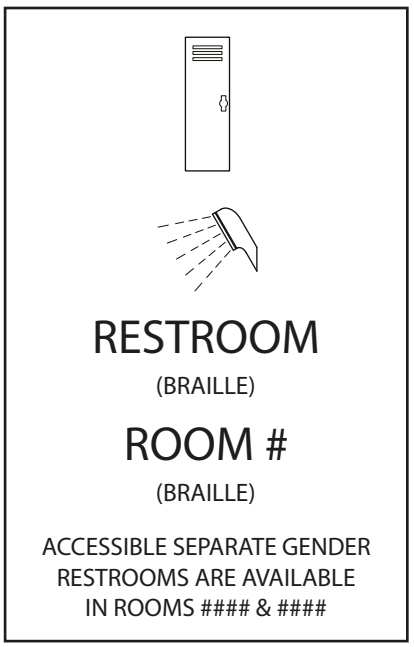

SINGLE OCCUPANT LOCKER ROOM
WITH RESTROOM/SHOWER
NOT ACCESSIBLE

GENERAL NOTES

1. REMOVE WORD "ACCESSIBLE" IF NEAREST IS NOT ACCESSIBLE.
2. REMOVE INT. SYMBOL OF ACCESSIBILITY IF FACILITY IS NOT ACCESSIBLE.
3. PICTOGRAMS ARE LOCATED IN QUANDRANTS. IF A PICTOGRAM IS NOT NEEDED, DO NOT REARRANGE REMANING PICTOGRAMS.
4. ROOM NAME OPTIONS FOR SINGLE OCCUPANT ROOMS:
   "_____ ROOM" (SHOWN)
   "GENDER INCLUSIVE ____ ROOM"

SINGLE OCCUPANT SHOWER ROOM
NO RESTROOM
NOT ACCESSIBLE

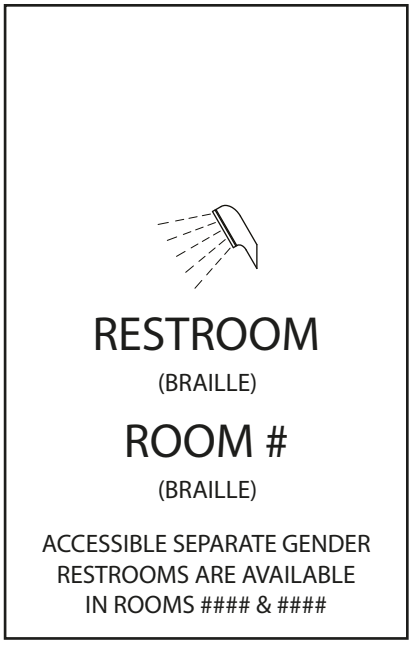

SINGLE OCCUPANT SHOWER ROOM
WITH RESTROOM
NOT ACCESSIBLE

GENDER INCLUSIVE ROOM SIGN STANDARD GUIDELINES

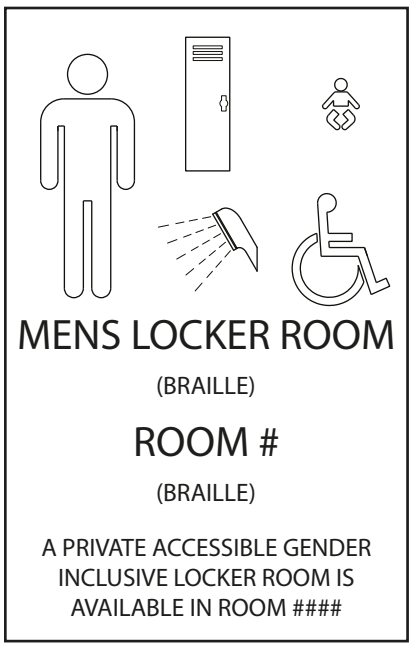

MEN'S LOCKER ROOM
NO RESTROOM/SHOWER
BARRIER FREE
CHANGING STATION

WOMEN'S LOCKER ROOM
WITH RESTROOM/SHOWER
NOT ACCESSIBLE

GENERAL NOTES

1. REMOVE WORD "ACCESSIBLE" IF NEAREST IS NOT ACCESSIBLE.
2. REMOVE INT. SYMBOL OF ACCESSIBILITY IF FACILITY IS NOT ACCESSIBLE.
3. PICTOGRAMS ARE LOCATED IN QUANDRANTS. IF A PICTOGRAM IS NOT NEEDED, DO NOT REARRANGE REMANING PICTOGRAMS.
4. LOCKER ROOM NAMES OFTEN INCLUDE SPORT NAME. REVIEW WITH DESIGN MANAGER.

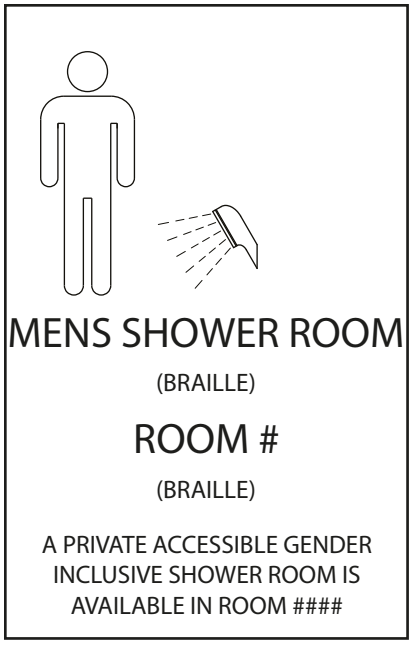

MEN'S SHOWER ROOM
NO RESTROOM
NOT ACCESSIBLE

WOMEN'S SHOWER ROOM
WITH RESTROOM
NOT ACCESSIBLE

GENDER SPECIFIC ROOM SIGN STANDARD GUIDELINES

APPENDIX B: UM STANDARD LACTATION ROOM PICTOGRAPH

DESIGN GUIDELINE SBA 5.11
FIRE COMMAND CENTER

Scope

This design guideline clarifies how certain Michigan Building Code (MBC) requirements for Fire Command Centers are to be applied on University of Michigan projects.

Related Sections

Design Guideline Technical Sections:
DG101400 – Signage
DG230900 – Mechanical System Controls
DG263000 – Engine-Generator System
DG273523 – Emergency Responder Radio Coverage
DG283100 – Fire Detection and Alarm

U-M Master Specifications:
MS263000 – Engine-Generator System
MS283100 – Fire Detection and Alarm System

References:

NFPA 72, "National Fire Alarm and Signaling Code"

Fire Command Center Room

Locate the Fire Command Center (FCC) on the ground floor and near the building entrance designated for first response by the Division of Public Safety and Security (DPSS) and the Ann Arbor Fire Department. Provide access to the room from the interior of the building. If possible, also provide access directly from the exterior of the building. Provide room dimensions and fire separation as required by the Michigan Building Code.

Using the room to incorporate other building functions such as a reception desk, security office, or DPSS mini-station shall be reviewed with the U-M Fire Marshal and the State of Michigan Bureau of Fire Safety (if applicable). The layout, location and features of the FCC shall be reviewed with the U-M Fire Marshal to obtain approval of the room and the locations of the various control panels to be located in the room.

Connect safety-related equipment, lighting, and duplex receptacles within the room to the building's emergency power system.

Arrange for the Key Office to key the interior door lock for a special machine room series key. Arrange for the building's Facilities Manager to receive a copy of this special machine room series key. This will enable the DPSS and Plant Operations Shop personnel with machine room master key as well as the Facilities Manager to have immediate access to the room.

If there is an exterior door into the FCC, equip it with a card reader. Arrange for the Key Office to key the exterior door lock for a restricted access series key.

Provide signage at each door with "Fire Command Center" in 1" high, bold red letters. Provide an additional ceiling or wall mounted sign above the door that is clearly visible from the exterior entrance when the FCC is not directly adjacent to the entrance.

Provide a control switch for simultaneously unlocking stairway doors. The control switch shall not unlock exit discharge doors to the outside that are locked by the card access control system.

Provide as-built building floor plans marked by the Architect to indicate the code-required building features. Provide a drawing hanging flat file stand on wheels with a minimum of eight clamp-type drawing sticks.

Provide a Building Information Card containing all the information required by the MBC.

Fire Alarm Control Unit

Locate the fire alarm control unit (FACU) in the FCC. Specify the following FACU features in accordance with NFPA 72 and Specification MS283100:

- An emergency voice/alarm communication system control unit. If the fire alarm system includes building-wide mass notification, also specify pushbuttons capable of initiating the mass notification tones and alert messages.
- A fire department two-way communications system including six pluggable portable handsets, except if the building contains Emergency Responder Radio Coverage (ERRC), do not specify a fire department two-way communications system.
- The FACU's digital annunciator shall display the status of sprinkler valves and waterflow detectors.
- The FACU's digital annunciator shall display the status of the fire pump.
- If the building contains ERRC, the FACU's digital annunciator shall display the status of the ERRC.
- The FACU's digital annunciator shall store and display several hundred past events. No printer is required.

Generator Supervision Requirements

Provide a generator remote annunciator panel and a generator manual start and transfer panel. The generator manual start and transfer panel may be manufactured by the automatic transfer switch (ATS) vendor or field fabricated, and shall include the following:

- A green "normal power" and a red "generator power" indicating light for each emergency and standby power ATS to indicate the position of the ATS. Label each pair of lights to indicate the generator and ATS equipment numbers and whether the loads connected to the ATS are emergency or standby.
- One Plexiglas guarded, two position, maintained contact, non-keyed "AUTO-RUN" selector switch to manually start all generators and enable all ATSs to transfer.
    - The selector switch shall have one Form-C maintained contact for each ATS (except do not provide a contact for a fire pump ATS that is integral to the fire pump controller).

- Provide control wiring from each switch contact to its ATS.
- In the "AUTO" position, each switch contact shall place its associated ATS in normal stand-by mode.
- In the "RUN" position, each switch contact shall simulate a loss of normal power to its ATS. This shall cause each ATS to start its generator and then transfer to generator power when its generator reaches proper voltage and frequency. However, if the building has multiple generators and paralleling switchgear, the generators shall start but the ATSs shall not transfer until normal power is lost.

- A nameplate identifying the panel as "Generator Manual Start and Transfer".

Fire Fighter's Smoke Control Panel

Include in the design documents, a diagram of the fire fighters smoke control panel face. This diagram shall include:

- Schematic diagram of the smoke control system showing all related exhaust fans, air handlers, dampers, actuated doors, etc. with graphical indication of the building area served by each smoke control component. Example: indicate which stair a stairwell pressurization fan serves.
- A legend for the various components on the panel face diagram.
- Labeling required for each component, e.g. SEF-1, West Fire Shutter, etc.
- Location of all switches on the panel face and required labeling, e.g. "OFF-AUTO-ON".
- Location and color of all indicator lights.
- A simplified sequence of operation for the smoke control system(s).
- A clear indication of the direction of airflow.
- The relationship of components relative to one another.

Air Distribution Supervision Requirements (Equipment not associated with smoke control)

To meet the MBC requirements for "Status indicators and controls for air distribution systems" in the FCC, provide the following as a separate DDC building automation system panel:

- Provide a separate air distribution system status panel that shows graphically the location and operating condition of the major air handlers serving the building (not associated with building smoke control). Show the air handler status with two indicating lights - Red and Green.
  1. Air handler is off - the status red light is on.
  2. Air handler is on - the status green light is on.
- Label the air handlers, and depict graphically the area served.
- Provide "OFF-AUTO" switches to turn the air handlers off.

Small air handling equipment such as that serving substation and emergency generator rooms, fan coils, toilet exhaust fans, etc., typically are not required to be included on the status panel. The building automation system will provide the signaling necessary to control the air distribution supervision status lights and switches. The air distribution supervision status panel should be shown as part of the control drawings.

DESIGN GUIDELINE 5.12
LAB DESIGN AND SAFETY

Scope

Lab Design and Safety addresses safety related design considerations for layout and space separation, security, chemical use, safety equipment / supplies, and utilities. Guideline is applicable to both teaching and research laboratories. The intent of this guideline is to illustrate some basic health and safety elements that will contribute to providing a safe environment for researchers to conduct their work. Secondary intent is to allow flexibility for continued safe use as research changes and evolves.

Research takes many forms and involves different risks. The scope of this document is not intended to be comprehensive. It is expected that this document will serve as a springboard for project team discussions that seek to anticipate and evaluate health and safety hazards of planned research. Use this information to design research space in a way that minimizes hazards and facilitates consistent compliance with operational safety requirements. Safety discussions during the design process will contribute to a user education and a culture of safety.

Related Sections

U-M Design Guideline Sections:

5.2 Animal Facilities
6.0 DG 101400 Signage
6.0 DG 115313 Laboratory Fume Hoods, BSC's, Specialty Hoods and Acid Flammable Cabinets
6.0 DG 12345 Laboratory Casework
6.0 DG 132100 Controlled Environmental Rooms
6.0 DG 230030 Laboratory Ventilation Design

U-M Master Specification Sections:

7.0 MS115313 - Laboratory Fume Hoods

Other Related Documents: Comply with these documents and others when applicable

ANSI Z358.1 American National Standard for Emergency Eyewash and Shower Equipment
CDC-NIH Biosafety in Microbiological and Biomedical Laboratories
Department of Agriculture, ARS Facilities Design Standards
Guide for the Care and Use of Laboratory Animals- American Society for Accreditation of Laboratory Animal Care
MIOSHA
National Institutes of Health Design Requirements Manual for Biomedical Laboratories and
NFPA 45 Standard On Fire Protection For Laboratories Using Chemicals
"Safe Handling of Radioactive Materials", National Council on Radiation Protection (NBS Handbook 92)

Definitions:

- **Laboratories:** A room equipped for scientific experiments, research, or teaching, or for the production of drugs, chemicals, or other research materials. This includes both wet and dry lab space as well as lab support.
- **Non-lab areas:** Rooms and areas used for research data analysis, documentation, and discussion in which physical research materials are not used or stored. These typically include offices, researcher desks, meeting rooms, break rooms, etc.
- **PPE:** Personal Protective Equipment, requirements are based on specific research hazards.

Laboratory design requirements:

Layout and space separation:

- Provide physical separation between lab areas and non lab areas.
    - Individuals in a laboratory must wear appropriate attire and PPE. Physical separation of allows researchers to remove PPE while in non-lab areas.
    - It is prohibited to store or consume food/drink, apply make-up, or chew gum within laboratories. This includes desk areas in an open lab. Physical separation of desks from the lab allows for food/drink consumption.
    - Physical separation consists of a partition, floor to ceiling with doors and closers. If a visual connection is desired for safety or operations: consider glass partitions, borrowed lites etc.
    - Some laboratory areas may need to be separated from other research activities depending on research activities.

Access, security, and egress:

- Evaluate security level required for each lab space with user groups. Coordinate with Design Manager.
    - Consider levels of security from public to private. Sequence security from public corridor (low level security), to researcher work space (mid-level security), to lab enclosure (higher security).
- Arrange circulation to allow access to and egress from non-lab areas without going through lab areas.
    - This minimizes lab access and need for PPE.
- Arrange egress pathways to progress from higher hazard to lower hazard areas. Consider placement of fume hoods, equipment, furnishings, and cart storage when laying out egress pathways.

Safety equipment and supplies:

- Provide wall space on corridor side adjacent to lab entry doors for posting laboratory safety signage.
- Provide lab space for a safety station at main entry. Contents of safety station will vary but minimally includes PPE, spill kit, and first aid kit. Provide consistent

location in each lab to encourage researcher use and facilitate safe emergency response.

- In each lab room (separated by a door) that utilizes animals or chemical, biological, or radiological materials, provide hand wash sink with space for adjacent soap and paper towel dispensers.
    - It is important that hands are washed when leaving a laboratory to avoid spreading contaminants. Consider locating sink near egress point.
- Provide emergency shower and eyewash stations as required by MIOSHA regulations and letters of interpretation. Review optional related provisions with user and Design Manager including shower curtains, floor drains, and flow alarms.
- Provide wall phone or emergency hands free phone in each lab or lab suite, to accommodate emergency call. Relying on cell phones is not acceptable.

Chemical use, storage, and disposal:

- Obtain chemical types, concentrations, quantities, and storage needs for each laboratory space early in design phase to inform building planning and related requirements. Coordinate with Design Manager.
- Provide adequate chemical storage that physically separates incompatible chemicals/gases. Do not locate chemical storage shelves above sinks. Do not locate toxic or corrosive liquid storage above bench top.
- Provide adequate space and related provisions for waste materials / containers expected. Consider related safety requirements such as shielding, security, flammability, and separation of incompatible waste materials.
    - Chemical, biological, and radiological wastes are required to be stored in the lab in which they are generated, not in centralized accumulation areas. They are periodically collected and sent to a disposal/ recycling center.
- Although chemical hygiene plans prohibit dumping chemicals into the drain, provide a chemical resistant lab waste system connected to lab sinks, fume hood cup sinks, and similar plumbing fixtures in labs using chemicals.
    - The intent is to prevent damage to piping from spills or accidental discharges.
    - The lab waste system shall normally combine with sanitary waste near the point where sanitary waste exits the building.
- For laboratories using compressed gases provide designated areas for cylinders in use and associated restraints. Separate incompatible gasses and provide ventilated cabinets as required by code**.**
    - Review delivery, staging for spare / used cylinders, and pick-up requirements with researcher, building manager, and Design Manager to ensure that adequate routes and spaces are provided.

Utilities:

- Control lighting with occupancy or vacancy sensors wherever possible, but provide manual switches in areas where the sudden loss of light could be hazardous. Utilize lighting control occupancy sensors to control lab ventilation to conserve energy where approved by OSEH.

- Provide duplex receptacles adjacent to doors in labs and lab support areas for housekeeping. Connect to normal power circuits separate from lab receptacles. Multiple housekeeping receptacles may be on the same circuit. Label as "housekeeping".
- Provide sufficient fire alarm speakers to ensure sound detection when equipment and fume hoods are operating. Design fire alarm strobe light locations and intensities to ensure strobe detection despite visual obstructions such as island benches and suspended lab storage and services.

Renovation of existing laboratories:

For renovation of labs the Design Professional should evaluate if any items of Lab Safety Design Guideline can be incorporated.

Laboratory renovation projects face multiple challenges related to the limitations of existing space and infrastructure, as well as established practices of the building occupants. Physical limitations may dictate the extent to which this guideline is followed. It is expected that the AE, in conjunction with OSEH and the Design Manager will lead discussions, with the user, related the safety and operational impacts of design decisions. At minimum, the following topics should be addressed and documented as a part of the OPR/BOD:

- Relationship between areas for lab and non-lab activities
- Lab access, egress, and security
- Hazardous material use, storage, and disposal
- Safety equipment and supplies
- Compromises in designed functions and features due to existing condition limitations.
- Risks associated with dependence on existing reused systems and utilities

Separation between lab and non lab spaces will affect operational uses. Design Manager shall facilitate discussion between Design Professional, OSEH and users to develop a design that meets the goals of the users and the safety requirements of OSEH. Level of separation required may differ based on lab function.

2101 Commonwealth Blvd, Suite B
Ann Arbor, MI 48105-5759
www.med.umich.edu/facilities/plan/

5.13: UMHHC - HEALTHCARE PROCEDURE ROOM INFECTION CONTROL TYPES AND REQUIREMENTS (SBA-K-H)

General

This Special Building Area (SBA) guideline applies to new procedure rooms within University of Michigan Hospitals and Health Centers (UMHHC) inpatient and outpatient facilities, owned or leased. This SBA applies to clinical areas where invasive to minimally invasive procedures are performed.

The definition for, and the use and understanding of, the various procedure rooms names used within a healthcare setting (i.e. “Operating Room”, “Procedure Room”, “Treatment Room”, etc) varies greatly amongst healthcare codes, industry standards, design professionals, and UMH healthcare staff. Therefore the room types noted below and throughout the document were developed by UMHHC to better clarify the needs and requirements of the various procedure rooms.

This SBA was therefore created to establish a universal understanding amongst our design professionals, construction coordinators and staff, clinicians, infection control, and maintenance on how these spaces should be designed and operated. The information expressed in this SBA is meant to standardize the design and performance of procedure room types and requirements across the UMHHC campuses and is based on close coordination with the State of Michigan Department of Community Health and the UMHHC Infection Control and Epidemiology Department (ICE), along with industry-wide best practices. Where the information in this SBA seems to exceed that of regulating healthcare codes, the AE shall nevertheless utilize the information expressed here in this SBA. Where the information in this SBA would serve to conflict or be in direct violation of regulating healthcare codes, the A/E shall bring this to the attention of the University Project Manager. At no time shall governing healthcare codes be violated.

The use and application of these procedure room types is governed by UMHHC Infection Control and Epidemiology (ICE) in conjunction with the MI Health Facilities Engineering Section (HFES). All determinations on room types, and the procedures performed within, shall be made by UMHHC ICE and MI HFES. UMHHC Infection Control and Epidemiology shall be the authority on room type classifications for specific procedures.

Please refer to SBA 5.16 "UMHHC Requirements for Critical Pressure Sensitive Rooms" for information on detailing and other requirement where air pressure is critical.

UMHHC Definitions:

Semi-Restricted Corridor/Rooms: The corridor area within the “Red Line” where proper attire is required, including scrubs or protective coveralls (“Bunny Suit”) and hair coverings.

Restricted Corridors/Rooms: The sterile core or other restricted areas where proper attire is required, with the possible addition of a surgical face mask as directed by Infection Control.

Operating Room: A room licensed by the state as an Operating Room. (Infection Control “IC” Room Type 1 room as noted below)

Treatment, Procedure Rooms: General clinical room names used to describe clinical rooms where various surgical and non-surgical “procedures” are performed, varying in invasiveness from an Operating Room to an Exam Room. The goal of this document is to clarify these room names by the use of the IC Room Types 1 through 7.

Clear Area (Clear Square Footage): All room areas are to be calculated based on the actual clear floor area, excluding any built in cabinetry, boxed out low wall air returns, columns and the like.

Equipment List: A list of all equipment for a room or space, provided by UMHHC Facilities Planning and Development (FPD) Capital Equipment Planner.

Equipment Plan: A scaled 2-D or 3-D architectural plan which shows all “equipment”, furniture, built-ins and other items graphically within a room or space. These may include floor plans, reflected ceiling plans, and interior elevations, and are prepared by the A/E. “Equipment” here includes all items located in the room, as noted on the Capital Equipment “Equipment List”, Contractor installed equipment and infrastructure items, times provided by Interior Design, Medical Center Information Technology (MCIT) supplied equipment, and/or re-use items.

Equipment Plan and Room Size:

The size of each room type listed below is the minimum per code. In many cases, however the Equipment Plan will dictate that the room needs to be larger than the code minimum based on the equipment to be used within the room and staff movement paths.

For example, a room required to be 400 clear square feet might have overall dimensions within the interior walls of 24’ x 24’ (576 SF) within the walls if 2’ of built-ins, air returns and equipment around the perimeter are required. Additional equipment and staff movement paths may dictate the room be even larger.

Prior to finalizing room size, the A/E shall create Equipment Plans, including all fixed and movable equipment and furnishings to be used in the room for the specific cases expected in the room. If multiple procedures or equipment layouts are expected, each case should be laid out individually. Any equipment to be stored in the room when not in use for a particular case shall be accounted for. The Equipment Plan must include patient and staff locations, and include adequate circulation space (min. 30”) for staff to circulate fully around the perimeter of the room, and through the doors to the room, during the case. A Reflected Ceiling Plan should be created where ceiling mounted equipment are planned. Particular attention should be made to all boom and lighting layouts, and the “Sterile Field” created with the air supply. If a sterile field is to be created, it should be superimposed on the Equipment Plan. In all layouts, the location of the patient must be within the sterile field.

In addition to Equipment Plans, the cases should be mocked up with the actual equipment. The Equipment Plans shall be reviewed and approved by the Clinical department, ICE, and FPD.

Classification of Infection Control Room Types

In an effort to clarify the various types of surgical and procedure rooms and the procedures performed in each, UMH standardizes on (7) seven infection control room types for these spaces. These room types are defined in Table 1 below. UMHHC Infection Control and Epidemiology Department shall maintain a separate list of procedures for each room type.

TABLE 1

Infection Control Room Type	Surgical Procedure/ Invasiveness	Common Terminology (1)
1	Invasive, major surgical procedures, above or below fascia, may involve bone or implants	Licensed Operating Room (OR)/ ASHRAE Class C Surgery/C-Section
2	Invasive, minor surgical procedure, minimally invasive- below fascia, may involve bone or implants	Procedure Room/ Minor Surgical Procedure Room/ ASHRAE Class C Surgery
3	Cardiac Catheterization, Angiography and Interventional Radiology	Procedure Room/ Angiography/ ASHRAE Class B Surgery
4	Minimally invasive- above fascia only	Treatment Room/ ASHRAE Class A Surgery
5	Endoscopic, non-invasive	General Endoscopy/ ASHRAE D&T
6	Bronchoscopy	Bronchoscopy/ ASHRAE D&T
7	Needle guided procedure	Exam Room/ ASHRAE D&T
8	Minimally invasive- above fascia only	Exam Room/ASHRAE D&T

(1) Terminology per HFES Minimum Design Standards for Healthcare Facilities in Michigan, AIA Guidelines and/or ASHRAE Standards.

The A/E shall clearly indicate the Room Name & Room Type (i.e. Procedure Room- IC Type 3) on the preliminary and final construction contract documents, and in the Operational Narrative.

IC (Infection Control) Room Types

The A/E shall ensure that all rooms identified under this SBA shall conform to the criteria stated under Table 2 “Architectural”, Table 3 “Electrical” and Table 4 “Mechanical” at the end of this document.

IC Room Type 1 and IC Room Type 2:

Architectural
Due to the need to maintain space pressurization control, the A/E shall give special attention to providing a sealed space envelope; including extending all walls to the structure above and sealing all floor, wall and ceiling penetrations (i.e. light switch back boxes, conduit and pipe penetrations, etc) as well as the intersection of the wall and underside of the structure above.

In an effort to maintain a sealed, pressurized room envelope, the A/E shall limit the infrastructure (i.e. ductwork, piping, conduit, etc) passing over an IC Type 1 or 2 room to only that which serves the space. All items requiring regular maintenance (i.e. terminal air boxes, etc.) or accessibility (i.e. valves, etc.) shall be located outside of the room envelope so as to preclude the need to access such devices from within the space.

The stretcher access doors shall be automated with touch-less hand actuated sensors. The width will be determined by clinical needs and site conditions; a typical room might have a pair of doors totaling 6 feet wide. A wall mounted shut-off switch for these doors will be located on the room side to prevent accidental usage during a procedure. Where possible, a bi-directional "man-door" should be used for staff traffic. Push paddle hands-free type hardware should be used so that it is possible to enter the room without using hands or arms. All doors shall have closers. The door material should be carefully considered for durability, for example fiberglass rather than painted hollow metal, and door frame protection should also be installed.

Provide properly sized and placed access hatches to allow for maintenance and related activities associated with any equipment placed, or may be placed, above the ceiling. Properly sized meaning they are big enough for a normally sized person, to access and maintain the equipment easily and safety. Where shoulder clearance is required, access hatches shall be a minimum of 24” x 24”.

The Architect shall provide carefully and completely laid out reflected ceiling plan showing all diffusers, lights, surgical column supports, fire suppression sprinklers, smoke detectors, access hatches, A/V equipment, and any other equipment to insure coordination and utility of the design. Also, provide cross-section of above ceiling space, sufficiently detailed to insure proper space and accessibility for all installed systems is available above the ceiling. The ceilings will consist of a gasketed accessible ceiling system. The ceiling tiles shall have a washable surface and must stay in place during the washing process. Tile clips will only be allowed where tiles are less than 2 square feet in size or as directed otherwise by the Design Manager.

All room finishes will be selected by UMHHC FPD, Interior Design, in consultation with IC and other UMHHC staff. Monolithic, non-porous wall surfaces, such as PVC or FRP are preferred. Flooring material and base material shall be monolithic, such as terrazzo or an epoxy flooring product, or a resilient sheet flooring.

Colors of ceilings, walls and floors shall be selected with consideration of their effects on the lighting levels in the room in all room types. Reflectance levels of less than 80% for ceilings, 50% for walls and 20% for floors shall be allowed for in the lighting design.

Flooring patterns may be desired to indicate the sterile field. If provided, construction documents must indicate that floor patterns match the extent exactly. Floor patterns may be desired to indicate other operational or equipment limits, such as gauss lines.

Mechanical
Rooms shall be served by a dedicated HVAC control zone to actively maintain the room’s thermal comfort and pressurization (typically either a dedicated AHU or supply and return terminal airflow control boxes in conjunction with a reheat coil). System shall be controlled to maintain room temperature and balanced to

maintain room pressurization, as measured via a differential pressure monitor across the main doorway from the clean corridor. Dynamic pressure control is neither required nor desired. Return airflow shall be controlled to maintain the active measured supply airflow minus a fixed airflow offset setpoint (initially assume an offset of 300-500 CFM, depending on number & size of doorways into space). Airflow offset shall be determined by test & balance contractor, as required to maintain a room pressurization of 0.04"-0.06"wc.

See Table 4 for mechanical requirements for these spaces.

Space temperature and humidity sensors shall be mounted in the common return air main from the room. DDC shall monitor the door status (ie open/ closed) of all doors into the space. Provide a wall mounted human machine interface (HMI) panel within the room that displays room temperature, temperature set-point, humidity, occupied/ unoccupied mode, space pressurization, door status and airchange rate. All points shall also be integrated into the BMS frontend. Panel shall allow the users to adjust temperature within the room. Panel shall provide local indication if room humidity, air change rate, or pressurization are outside of acceptable limits. Protect wall-mounted panel with a stainless steel "crash-guard" where applicable. HMI shall provide the following local status/ alarms to surgical staff:

Criteria	**Normal (Blue)**	**Alarm (Red)**
Room Humidity	60%RH- 20%RH	>60%RH or <20%RH
Airchange Rate	≥15 ACH	<15 ACH
Room Pressurization (1)	≥0.01" wc	<0.010" wc for ≥ 15 min
Temperature	NA	NA
Occupancy Status	Occupied	Unoccupied
Door Status	Closed	Open

(1) Room pressurization alarms to the BMS frontend shall be disabled when door status is open.

Additional front-end alarms may be required, contact UMH project engineer for standard sequence of operation for OR HVAC systems.

A/E shall clearly state the room pressurization requirement (i.e. goal is 0.04"-0.06"wc) on the design drawings and indicate a means of achieving pressurization (i.e. throttle return/ exhaust airflow).

Rooms shall include controls to automatically reduce ventilation during unoccupied periods for energy conservation. This control system shall include at least two ceiling or wall mounted dual technology (passive infrared plus microphonic sensing) occupancy sensors per room, selected for full room sensing coverage, to automatically determine room occupancy. All room sensors must simultaneously detect unoccupied conditions for a period of not less than 30 minutes in order to enable unoccupied mode operation. The system must be designed such that a failure at any level (i.e. loss of power to sensor, cut or disconnected communication wire, etc.) will cause the system to assume occupancy and operate in an occupied mode. During unoccupied mode operation, airflow shall be controlled down to the minimum level necessary to maintain required room pressurization, and to maintain the room temperature setpoint.

UMHHC preference is to provide humidity control in each room via a central AHU humidifier (set to maintain a discharge air humidity level) in conjunction with a dedicated duct-mounted "booster" humidifier for each room to fine-tune humidity levels to meet individual room set points. Where dedicated room humidifiers are not provided, the maximum number of rooms on a common humidifier shall be limited to four (4) rooms. The A/E shall verify requirements with HFES and UMHHC Mechanical Engineer.

Where ceiling booms are used for medical gas service, in addition to those gases provided on the boom, provide the following properly labeled medical gas outlets on the wall at the head end of the table: (2) MVAC with slides, (1) OX, (1) WAGD, and (1) MA.

Electrical

These rooms shall be served by critical power derived from two separate transfer switches, distributed on separate power risers and served from separate panels. Since these rooms are to be considered 'wet locations', isolated power supplies (IPS), with line isolation monitors, shall be installed in each room – two per room. The isolated power supplies shall be connected to the two critical power sources noted above.

A minimum of 48-outlets (24-duplexes) shall be installed in each room, with 50% fed from one IPS and the balance from the other IPS. Please note that 48 is the minimum, provide more when the program dictates the need for more. [This number of outlets is in addition to any normal power supplied outlets that may be required by code.] The outlets shall be conveniently, and evenly, spaced around the room-including those installed in the surgical booms. All outlets shall be hospital grade.

Outlets shall be served by 20-ampere circuits, using XHHW-2 wire. Normally no more that 4-outlets (2-duplexes) shall be connected to each circuit – unless the circuit is being dedicated to a single purpose. [A good policy is to limit power to 1000-watts per circuit.]

Lighting shall be 5000-K fluorescent, with a maintained room lighting level of minimum 150-footcandles within 6-feet of operating table/theatre. The balance of the room shall have minimum 75-footcandles. Provide switching and controls to permit reduced lighting during portions of the procedures that may mandate this, as noted in the program. All of the lighting will be on critical power, served from two circuits that are fed from different transfer switches. Approximately 33% of the lighting fixtures shall be battery back-up to one of the ballasts in the fixture, to provide illumination during the period before emergency power is restored. [All of the above are in addition to the lighting provide by the surgical lights themselves.]

Provide power receptacles, and data outlets, for at least three large, wall-mounted, video display units (large computer screens) at locations defined by OR staff. Carefully coordinate the mounting elevation, and locations, of these with the staff.

Provide a raceway, junction and pull box system, power and data outlets, for installation of A/V equipment that may be provided either in the base project, or at a future date. A detail drawing will be made available to assist in this.

At least 50% of the power outlets, and lighting, in scrub area, shared imaging rooms, and/or adjacent equipment rooms shall be on critical power, but not necessarily on IPS power. The outlets not on IPS shall have GFCI. Coordinate exact needs for power and data with equipment planners and OR staff. In addition, imaging systems, critical for completion of the surgeries, shall be served by critical power.

When program notes need for laser power outlets, these outlets may be supplied by a shared IPS serving several rooms. Carefully coordinate with Capital Equipment Planner, Bio-Medical Engineering and OR staff in the placement and sizing of these outlets.

Provide open channel communications system (in essence hands free) to allow communication for persons anywhere in the room to other defined remote locations. Said locations needing this system will be defined during DD.

No fire alarm strobes or speakers shall be installed in these rooms. Nor shall they be in adjacent corridors, if intervening walls have extensive glass. These instead will be placed in control rooms, or scrub areas not in line of sight of stall working on the patient.

IC Room Type 3:

Architectural
Due to the need to maintain space pressurization control, the A/E shall give special attention to providing a sealed space envelope; including extending all walls to the structure above and sealing all floor, wall & ceiling penetrations (i.e. light switch back boxes, conduit & pipe penetrations, etc) as well as the intersection of the wall and underside of the structure above.

In an effort to maintain a sealed, pressurized room envelope, the A/E shall limit the infrastructure (i.e. ductwork, piping, conduit, etc) passing over a Type 3 room to only that which serves the space. All items requiring regular maintenance (i.e. terminal air boxes, etc.) or accessibility (i.e. valves, etc.) shall be located outside of the room envelope so as to preclude the need to access such devices from within the space. The stretcher access doors shall be automated with touch-less hand actuated censors. A wall mounted shut-off switch for these doors will be located on the room side to prevent accidental usage during a procedure. Where possible a bi-directional "man-door" should be used for normal procedure traffic. Push paddle hands-free type hardware should be used. All doors shall have closers.

Provide properly sized and placed access hatches to allow for maintenance and related activities associated with any equipment placed, or may be placed, above the ceiling. Properly sized meaning they are big enough for a normally sized person, to access and maintain the equipment easily, and safety. The number of hatches shall be based upon equipment installed above ceiling; however, at least two shall be installed regardless. Where shoulder clearance is required, access hatches shall be a minimum of 24" x 24".

Architect shall provide carefully and completely laid out ceiling plan showing all diffusers, lights, surgical column supports, fire suppression sprinklers, smoke detectors, access hatches, AV equipment, and any other equipment to insure coordination and utility of the design. Also, provide cross-section of above ceiling space, sufficiently detailed to insure proper space and accessibility for all installed systems is available above the ceiling. The ceilings will consist of a gasketed accessible ceiling system. The ceiling tiles shall have a washable surface and must stay in place during the washing process. Tile clips will only be allowed where tiles are less than 2 square feet in size or as directed otherwise by the Design Manager.

All room finishes will be selected by UMHHC FPD, Interior Design, in consultation with IC and other UMHHC staff. Flooring patterns may be desired to indicate operational limits. If provided, construction documents must indicate that the floor patterns match the limits exactly.

Mechanical
See requirements for IC Room Type 1 & 2 above.

Electrical
These rooms shall be served by critical power derived from two separate transfer switches, distributed on separate power risers and served from separate panels, two per room. Since these rooms are to be considered 'wet locations', isolated power supplies (IPS), with line isolation monitor, shall be installed in each. The isolated power supplies shall be connected to the one of the critical power sources noted above.

A minimum of 36-outlets (18-duplexes) shall be installed in each room, with 50% fed from one IPS and the balance from the second IPS. Please note that 36 is the minimum, provide more when the program dictates the need for more. [This number of outlets is in addition to any normal power supplied outlets that may be required by code.] The outlets shall be conveniently, and evenly, spaced around the room-including those that may be installed in the surgical booms. All outlets shall be hospital grade.

Outlets shall be served by 20-ampere circuits. Use XHHW-2 wire for all wiring in these rooms. Normally no more that 4-outlets (2-duplexes) shall be connected to each circuit – unless the circuit is being dedicated to a single purpose. [A good policy is to limit power to 1000-watts per circuit.]

Lighting shall be 5000-K fluorescent, with a maintained room lighting level of 75-footcandles within 6-feet of operating table/theatre. (IR shall have 150 fc) The balance of the room shall have min 25-footcandles. Provide switching and controls to permit reduced lighting during portions of the procedures that may mandate this, as noted in the program. All of the lighting will be on critical power, served from two circuits that are fed from different transfer switches. Approximately 33% of the lighting fixtures shall be battery back-up to one of the ballasts in the fixture, to provide illumination during the period before emergency power is restored. [All of the above are in addition to the lighting provide by the surgical lights themselves.]

Provide power receptacles, and data outlets, for at least two large, wall-mounted, video display units (large computer screens) at locations defined by OR staff. Carefully coordinate the mounting elevation, and locations, of these with the staff.

Unless noted otherwise in the program statement, provide a raceway, junction and pull box system, power and data outlets, for installation of A/V equipment that may be provided either in the base project, or at a future date. A detail drawing will be made available to assist in this.

At least 50% of the power outlets, and lighting, in scrub area, shared imaging rooms, and/or adjacent equipment rooms shall be on critical power, but not necessarily on IPS power. The outlets not on IPS

shall have GFCI. Coordinate exact needs for power and data with equipment planners and OR staff. In addition, imaging systems, critical for completion of the surgeries, shall be served by critical power.

When program notes need for laser power outlets, these outlets may be supplied by a shared IPS serving several rooms. Carefully coordinate with Capital Equipment Planner, Bio-Medical Engineering and staff in the placement and sizing of these outlets.

Provide open channel communications system (in essence hands free) to allow communication for persons anywhere in the room to other defined remote locations. Said locations needing this system will be defined during DD.

No fire alarm strobes or speakers shall be installed in these rooms. Nor shall they be in adjacent corridors, if intervening walls have extensive glass. These instead will be placed in control rooms, or scrub areas not in line of sight of staff working on the patient

IC Room Type 4:

See Tables 2, 3, 4. All doors shall have closers.

IC Room Type 5 and 6:

See Tables 2, 3, 4

IC Room Type 7:

See Tables 2, 3, 4.

IC Room Type 8:

Architectural
Refer to typical Infection Control Room Type layout drawings on Standard Details page. Doors should be 3'-2" minimum. Privacy should be provided at doorway by way of curtains and/or hinge gasketing. Walls should be full height to structure above, and acoustically insulated. If plenum returns are used, walls should extend as far as practical above ceiling plane and return-air acoustical boots should be installed. Wall finishes should be durable and cleanable. Wall protection should be installed. Sink should be located as close to the doorway as practical. Flooring should be seamless, with an applied cove base typically.

TABLE 2: ARCHITECTURAL

Infection Control Room Type	Access Restrictions	Minimum Room Size (Clear Square Footage) Actual size determined by Equipment Plan	Min. Room Ceiling Height (ft)	Floors Monolithic	Base	Walls
1	Access from semi-restricted hall in a semi-restricted suite, room is restricted during procedure	400 sq. ft. min. clear/ 600 for ortho, cardiac. Equipment may dictate significantly larger	10'-0"	Yes	Integral	FRP/PVC
2	Access from semi-restricted hall, room is semi-restricted or restricted during procedure Not to be a shared semi-restricted hall that also serves Room Type 1 above.	250 sq. ft. code minimum; Equipment may dictate significantly larger	10'-0"	Yes	Integral	FRP/PVC
3	Access may or may not be from a restricted hall, room is unrestricted when sterile field not present	400 sq. ft. code minimum. (Note 1) Equipment may dictate significantly larger	10'-0"	Yes	Integral	FRP/PVC
4	Access may or may not be from a restricted hall, room is unrestricted when sterile field not present	250 sq. ft. code min. Equipment may dictate significantly larger	9'-0"	Yes	Applied	Washable
5	Unrestricted access and room	250 sq. ft. code min. Equipment may dictate significantly larger	9'-0"	Yes	Integral	Washable
6	Unrestricted access and room	250 sq. ft. code min. Equipment may dictate significantly larger	8'-0"	Yes	Integral	Washable
7	Unrestricted access and room	Highly dependent upon equipment	Highly dependent upon equipment	Yes	Applied	Washable
8	Unrestricted access and room	120 sq. ft. (inpatient) 100 sq. ft. (outpatient) Code min.	8'-0"	Yes	Applied	Washable

References:

- Minimum Design Standards for Healthcare in Michigan, 2007
- ASHRAE/ASHE Standard 170- Ventilation of Health Care Facilities, 2008
- UMH Infection Control Policy, Surgical Site Infection Prevention, 2008
- Guidelines for Design and Construction of Health Care Facilities, 2010

Note:

1. IR Single plane, 600 SF; BiPlane 650 SF; CT/Biplane (Hybrid) 700 SF
   IR Equipment room Single plane 60 SF, BiPlane 80SF, CT/Biplane (Hybrid) 200 SF
   IR Control Room: Single plane 180 SF, BiPlane 200 SF, CT/BiPlane (Hybrid) 250 SF

TABLE 3: ELECTRICAL

Infection Control Room Type	Wet Location	Number of Power Sources (Note 1)	Isolated Power (IP) Required	Number of IP (Note 5)	Minimum Number of Outlets (Note 2)	Multi-level Room Lights (Note 12)	Battery Lights	Green (Color) Lights (Note 6)	Fire Alarm 'Horns' and Strobes	Hands Free 'Intercom' (Note 8)	Audio/Visual 'Ready' (Note 9)	Flat screen monitor (White Board) Ready (Note 10)	Radiology Display Ready (Note 10)	Booms (Note 9,11)
1	Yes	2 (Note 3)	Yes	2	48	Yes	Yes	Yes	No	Yes	Yes	Yes	Yes	Yes
2	Yes	2 (Note 3)	Yes	2	48	Yes	Yes	Yes	No	Yes	Yes	Yes	Yes	Yes
3	Yes	2 (Note 3 and 13)	Yes	2	36	Yes	Yes	(Note 7)	No	Yes	Yes	Yes	Yes	No
4	(Note 4)	1 (Note 14)	(Note 4)	(Note 4)	24	Yes	Yes	No	No	No	No	No	No	No
5	No	1 (Note 15)	No	0	24	Yes	No	No	Yes	No	No	No	No	No
6	No	1 (Note 15)	No	0	24	Yes	Yes	No	Yes	No	No	No	No	No
7	No	1 (Note 15)	No	0	16	Yes	No	No	Yes	No	No	No	No	No
8	No	1 (Note 16)	No	0	16	Yes	Yes	No	Yes	No	No	No	No	No

General Notes:

- In room types 1, 2, 3 and 4 provide sufficient battery backed lighting to maintain a minimum of 30-fc, in at least the sterile field area of the room, for the 10-seconds required to bring on line the generator power.
- In rooms needing green lighting, provide multi-lamp fixtures with individual switching controls for at least the sterile field area of the room. Critical Power shall be provided as noted in the following example. The green color shall be achieved through the use of standard 5000-K lamps, but with green color sleeves over the lamps. [One such design scenario might include the use of six-lamp fluorescent fixture system, in the area of the sterile field. In such a design the middle two (5000-K) lamps would be tied to a Critical Power circuit and would have battery back-up, the two lamps nearest the sterile feed (5000-K) would be tied to a second Critical Power (but with no battery back-up), and the final two would be the green color lights, also tied to Critical Power.]
- Nurse station area in the room, shall have dimmable task light - LED or equivalent.
- Newer Type 1, 2, and 3 rooms have been equipped with lighting control system to control all lighting in the room. Base systems have typically had 6-buttons – up to 5 'scenes' plus off. Control stations at entrance to room from sterile corridor, and another at the nurse's station in the room. Provide manual over-rides to accommodate failure of lighting controller when appropriate.
- Low, recessed, wall mounted lighting (LED or equivalent) shall be provided for the safety of the staff in the room, when main lighting is off as may be required for any given procedure.
- All receptacles served from Critical Power shall be red, with red cover plates. Those fed from normal power shall be ivory, or brown, to match the building standard.
- When Normal Power is the second source to a room, the number of equally spaced receptacles shall be similar to the number of Critical Power receptacles. In rooms with only one power source being needed, and that source is from the Critical Power branch, also provide at least one normal power receptacle on each wall.
- In room types 4, 5, 6, and 7, located in buildings without generators, provide battery-backed power in the overhead lighting fixtures (or by separately mounted

wall 'bug-eye' fixtures) to provide a minimum of 15-foot-candles of lighting for 20-minutes or more.

Notes:

1. When two sources of power are required as noted above, and there is Critical Power from independent transfer switches, use these two Critical Power sources. In other cases use one Critical power source, and one normal source.
2. The noted number of outlets indicated is minimum number required by codes to meet clinical needs, supply additional outlets as clinical needs and/or good practice requires. (Note that the number indicated here is for the number of 'outlets', the number of duplexes is half of these numbers).
3. The outlets from the two sources shall be equally spaced around the room, except as modified by Note 5.
4. Normally not a wet location. Ask chief clinician if any of the Type 4 rooms will have procedures that should be considered 'wet'. If wet location designation applies to any (or all) such rooms, provide one isolated power (IP) system in those room(s). Rooms, not defined as 'wet location', and not having isolated power, should have a sign at the entrance noting "Room is not equipped with isolated power supplies".
5. When only one isolated power (IP) system is noted or required, confer with clinician on placement of IP outlets within room (evenly spaced or not).
6. Noted rooms shall normally be designed for green (color) lighting as a supplement to the white lighting. This green lighting is used in cases where normal white lighting is inappropriate. Affirm need with chief clinician assigned to project team.
7. Confer with chief clinician assigned to project team regarding the procedures to be done in some, or all, of the Type 3 rooms in project scope.
8. At minimum, intercom shall be among noted rooms and main nurse station (or control station) in suite. Ask if additional locations need to be included in the hands free intercom system.
9. Provide microphone, camera and speaker boxes in ceiling with raceways to an A/V 'hub' location in the room. Also, provide one 2" conduit from each boom to the hub, and two 2" conduits from the hub to a 12"x12" recessed box at nurse's desk. Provide power from isolated power system to the hub location, and to the nurse's desk. Affirm details on quantities of boxes and raceway sizes with assigned Electrical Engineer and Capital Equipment Planner.
10. Normally provide a duplex outlet, and data outlet, on wall at locations defined by chief clinician and/or their designee.
11. Provide power, data, A/V, gases, and other services to booms, confer with Capital Equipment planner.
12. Verify if dimming of lights is also required for certain procedures.
13. Imaging machines and associate controls shall be served by UPS power or sufficient space shall be allotted in the machine room for a future stand-alone UPS unit.
14. Critical power source required with one receptacle in room served by normal power.
15. Normal power source is acceptable with one receptacle in room served by critical power.
16. Normal power source is acceptable.

TABLE 4: MECHANICAL

Infection Control Room Type	Room Air Pressure	Pressure Monitor	Pressure Control (0.03"-0.10"w.c.)	Min. Air Changes/ Hr. (Outside air)	Min. Air Changes/ Hr. (Total)	Humidity (%RH)	Temperature range (User adjustable) (Note 1)	Final Filtration (MERV)	Air Supply Centered above surgical site	Non-Aspirating Supply	Ducted Air Return	Return Near Floor (Minimum two opposite locations)	Re-circulated Air Units	Hand Wash Sink in Room	Scrub Sinks Outside of Room	Washable Devices (i.e. thermostats, etc)
1	Out/ Positive	Yes	Yes	4	20	30-60	62-73	17	Yes	Yes	Yes	Yes	No	No	Yes	Yes
2	Out/ Positive	Yes	Yes	4	20	30-60	68-73	17	Yes	Yes	Yes	Yes	No	No	Yes	Yes
3	Out/ Positive	Yes	Yes	4	20	30-60	68-73	17	Yes	Yes	Yes	Yes	No	No	Yes	Yes
4	Out/ Positive	N/A	N/A	3	15	30-60	70-75	14	N/A	N/A	Yes	N/A	No	Yes	No	No
5	Out/ Positive	N/A	N/A	2	15	30-60	68-73	14	N/A	N/A	Yes	N/A	No	Yes	No	No
6	In/ Negative	Yes	Yes	2	12	30-60	68-73	14	N/A	N/A	Exh	N/A	No	Yes	No	No
7	Neutral/ Positive	NA	NA	2	6	Max 60 (Note 2)	70-75	NA	NA	N/A	Yes	NA	N/A	Yes	No	No
8	N/A	N/A	N/A	2	6	Max 60	70-75	N/A	N/A	N/A	Yes	N/A	N/A	Yes	No	No

References:

- Minimum Design Standards for Healthcare in Michigan, 2007
- ASHRAE/ASHE Standard 170- Ventilation of Health Care Facilities, 2008
- UMH Infection Control Policy, Surgical Site Infection Prevention, 2008

Notes:

1. Consideration must be given to user requests for elevated temperatures and / or rapid increase of room temperature based on the protocol of the procedures being performed, for example the need to maintain a 90 degree room temperature. Where non-aspirating supply is required, controls must be in place to maintain the air flow pattern (i.e. “sterile field”) while the temperature is increased.
2. Confirm minimum and maximum humidity levels with imaging or other equipment.

MICHIGAN MEDICINE
UNIVERSITY OF MICHIGAN

2101 Commonwealth Blvd, Suite B
Ann Arbor, MI 48105-5759
www.med.umich.edu/facilities/plan/

5.14: UMHHC - PATIENT CARE AND SUPPORT SPACES ROOM TYPE REQUIREMENTS (SBA-L-H)

GENERAL

This Special Building Area (SBA) guideline applies to new and renovated patient care and support space types within the University of Michigan Hospitals and Health Centers (UMHHC) that are not covered by SBA-K-H – "Healthcare Procedure Room Infection Control Types and Requirements". That document addresses room types such as Operating and Procedure rooms. This document addresses all of the subsequently listed room types in UMHHC either owned or leased.

The information included in this SBA is meant to standardize the design and performance of a variety of typical spaces across the UMHHC campuses and is based on close coordination with the State of Michigan Department of Community Health and UMHHC Infection Control Department, along with industry-wide best practices. Where the information in this SBA exceeds that of regulating healthcare codes, the A/E shall utilize the information expressed in this SBA. Where the information in this SBA would serve to conflict or be in direct violation of the governing regulating healthcare codes, the A/E shall bring this to the attention of the University Project Manager. Under no circumstances shall the governing healthcare or any other code be violated.

In general, use the latest edition of the Facilities Guidelines Institute's "Guidelines for the Design and Construction of Health Care Facilities" as a design guideline. Review any discrepancies with the Design Manager.

Please refer to SBA 5.16 "UMHHC Requirements for Critical Pressure Sensitive Rooms" for information on detailing and other requirement where air pressure is critical.

TABLE OF CONTENTS **PAGE**

GENERAL 1
PROTECTIVE ENVIRONMENT (PE) & AIRBORNE INFECTION ISOLATION (AI) ROOMS 2
PREPARATION/RECOVERY BAY/ROOM 2
NURSING STATION 3
MEDICATION ROOM 3
NOURISHMENT ROOM 4
SOILED UTILITY/SOILED HOLDING ROOM 4
CLEAN UTILITY/CLEAN HOLDING ROOM 5
CONFERENCE ROOM 5
CLASSROOM 6
CONSULTATION ROOM 6
ON-CALL ROOM 7
PATIENT WAITING ROOM/AREA 7
BILLING OFFICE 8
RADIOLOGY IMAGING ROOM 8
RADIOLOGY READING ROOM 9
STAFF LOUNGE/BREAK ROOM 9
PUBLIC AND/OR STAFF TOILET ROOM 10
BEHAVIORAL HEALTH AREAS 10

PROTECTIVE ENVIRONMENT (PE) & AIRBORNE INFECTION ISOLATION (AI) ROOMS

All PE & AI rooms shall be designed per 2003 CDC HICPAC "Guidelines for Environmental Infection Control in Health Care Facilities" to facilitate an immunocompromised patient with an airborne infectious disease."

Architectural
All Protective Environment, Airborne Infection Isolation and Combination rooms shall have Anterooms, with self-closing doors. The Anteroom shall be sized to accommodate storage of personal protective equipment and space for staff to don PPE. Disposal of PPE shall be considered. All room exit doors shall have self-closing doors. Rooms shall have monolithic ceilings and seamless floors with an integral base. Walls and furnishings shall be easily cleanable. Viewing panels for patient observation shall be installed in doors and/or walls, with blinds or privacy curtains.

Due to the need to maintain space pressurization control, the A/E shall give special attention to providing a sealed space envelope; including extending all walls to the structure above and sealing all floor, wall & ceiling penetrations (i.e. light switch back boxes, conduit & pipe penetrations, etc) and the intersection of the wall and underside of the structure above.

In an effort to maintain a sealed, pressurized room envelope, the A/E shall limit the infrastructure (i.e. ductwork, piping, conduit, etc) passing over a PE/AI Room to only that which serves the space. All items requiring regular maintenance (i.e. terminal air boxes, etc.) or accessibility (i.e. valves, etc.) shall be located outside of the room envelope so as to preclude the need to access such devices from within the space.

Mechanical
Rooms shall be served by a supply and return/ exhaust constant volume terminal box (ie CAV), balanced to maintain a room airflow offset (typically 150-200 CFM/ door), as required to maintain a room pressurization of 0.02" wc (measured at the door between patient room and anteroom). The supply CAV shall utilize a HW reheat coil to actively maintain the adjustable setpoint of the room's thermostat.

Airborne Infection Isolation rooms utilizing ante-rooms shall be designed with negative patient rooms and positive ante-rooms, per CDC guidelines.

Room shall utilize a room differential pressure monitor mounted on the corridor wall adjacent to the door into the patient room/ anteroom. Monitors for rooms with ante-rooms shall monitor space pressurization between the patient room and ante-room as well as the ante-room and corridor. All monitors shall be integrated back to the BMS.

A/E shall clearly state the room pressurization requirement (i.e. design of 0.02" wc, minimum 0.01"wc per HFES MDS) on the design drawings and indicate a means of achieving pressurization (i.e. throttle return/ exhaust airflows).

PREPARATION/RECOVERY BAY/ROOM

These areas are used for holding patients prior to or after medical procedures and/or surgeries and are part of a larger suite that include support spaces for this particular function. ***Note: A full size mock-up of this space type is required during the design phase to validate all design elements. Reference Architectural Design Guideline 102500-H – 'Service Wall.***

Minimum Standards

- Three walls + cubicle curtain at front for visual privacy
- Minimum 10' 6" wide bay.
- Minimum 4' clear on each side of bed. Holding area shall be designed to allow for routine movement of patients and equipment without infringing on the individual cubicles or designated areas. Designs should strive to maximize self-sufficiency with a maximum visibility of patients by staff and minimum travel distances.

- Provide a minimum four normal and four critical power duplexes, as well as two data outlets for computer. Charting and patient monitoring equipment requires one critical power quad as well as two data outlets installed in close proximity to each other.
- Provide necessary medical gases
- Air supply should be located in “corridor” area with air return in bay/room.
- Lighting should be ambient/reading/exam combination fixture.
- Staff assist button on each side of bed.
- Equipment rail system for BP monitoring, glove boxes, sharps container, etc.
- Wall protection on head and side walls
- Guest and/or patient seating (at least one bariatric)

Optional Features

- Consult with user group for specific design requirements (such as bariatric beds, etc.)

NURSING STATION

These areas are used for nursing staff to attend to tasks other than direct patient care. Nursing station should include furniture/furnishings to provide for minimum storage, ergonomic seating and work surfaces for computers and/or paperwork. The station should be separated from the corridor or from other general traffic to provide a modicum of privacy for information exchange between shifts or consultation among care staff.

Minimum Standards

- Station to accommodate a minimum of two staff - more as unit requires
- Systems furniture panels for separation and acoustic control.
- Outside “walls” of panels should be hard surface, not fabric.
- Minimum of 42” high counter/transaction top + 30” high section for wheelchair accommodation.
- Work surface for writing and computing.
- Binder bins with sloped tops and locking doors.
- Light switch specific to night lighting over workstation (on critical power)
- Tackspace, whiteboard and tasklighting.
- Pencil drawer
- Box/pedestal drawer
- Ergonomic, adjustable armless task seating with casters (appropriately specified for either carpet or hard surface flooring).
- ”Slatwall” components for organizing paperwork.
- Power (regular + critical hardwired)/data/phone, nurse call, intercom outlets and control ‘stations’ appropriate for size of station.
    - Separate raceway paths for normal power, for emergency power, and for data, including wiring management provisions.
- Finishes to coordinate with adjacent corridor (sheet vinyl/base, painted walls, etc.)
- Dedicated HVAC zone of control
- Medical gas alarm panel (on back or adjacent wall)

Optional Features

- Master nurse call
- Emergency phone
- Monitoring/CIC equipment, etc. (on back or adjacent wall)
- Wall protection
- Sign to clearly identify station

MEDICATION ROOM

These rooms are used to securely store medications for easy access by authorized personnel.

Minimum Standards

- Door with key pad or card reader. Door shall include glazing.
- Sink with splash guard (see 064040-H – 'Architectural Woodwork')
- Omnicell with adjacent undercounter refrigerator
- Sharps container
- Work counter
- Computer + OMP + printer
- Critical power for Omnicell, refrigerator and OMP (provide normal power outlets for when repairs to critical power are required)
- Wire carts for storage
- Angled shelving
- Tackboards
- Hooks for IV prep
- Sheet vinyl flooring / base with painted walls

Optional Features

- n/a

NOURISHMENT ROOM

These areas are used to store and provide patient nourishment on inpatient floors. Access to these areas should be clear and convenient to the patient.

Minimum Standards

- Refrigerator (full or undercounter)
- Coffeemaker with instant hot water
- Ice Machine
- Sink – solid surface single bowl integral with countertop (see 064040-H – 'Architectural Woodwork')
- Paper towel and soap dispensers
- Waste & Recycling Receptacle
- Cold and hot drink cup storage
- Locked overhead/undercounter cabinets + drawer storage for surplus supplies and condiments
- Minimum 36" wide countertop

Optional Features

- Door on room
- Low level night lighting (multi-level)

SOILED UTILITY/SOILED HOLDING ROOM

This room receives and stores soiled items from clinic or inpatient areas. The room must be closed off from other clinic or inpatient areas to insure proper infection control measures are enforced.

Minimum Standards

- Door(s) with keypad or card reader (TBD during design)
- Stainless steel or solid surface counter with integral sink compartment
- Open compartment under sink (no storage)
- Open shelving above counter or wire carts
- Space for soiled carts + recycling and biohazard containers
- Wall protection (stainless steel, solid surface or vinyl, etc.)
- Floors should be vinyl tile or sheet vinyl with standard 4" wall base
- Standard fluorescent light fixtures with occupancy sensor

Optional Features

- Sheet vinyl floor with integral base if excessive water is used in this area.

CLEAN UTILITY/CLEAN HOLDING ROOM

This room type is used to store clean items/supplies for clinical and/or inpatient areas.

Minimum Standards

- Door(s) with keypad or cardreader
- Wire cart or plastic bin storage
- Quad outlets (minimum of two) for recharging equipment
- Data outlets
- Vinyl tile or vinyl sheet flooring with standard 4" wall base
- Painted walls
- Standard fluorescent light fixture with occupancy sensor
- Size of room depends on location within clinic/inpatient area – Generally 80 – 300 SF with minimum width of 6 feet

Optional Features

- n/a

CONFERENCE ROOM

This room type is used for meetings with multiple participants. Larger conference rooms may have video conferencing capabilities.

Minimum Standards

- Minimum size for conference room should be 10' wide x 12' long. Example: This size room has an 8-10 person capacity.
- Room size should not be less than 10 SF per person.
- Rectangular table or tables (can be ganged or simply abutted)
- Chairs around table should be arm chairs with casters
- Supplemental seating around perimeter of room should be stacking; casters preferred
- Markerboard (minimum of 4' x 4')
- Tackboard (minimum of 4' x 4')
- Clock
- Adjustable lighting level (dual switching for small rooms; dimming for large – 20 + occupants)
- Projection screen/overhead projector with data and power cabling in larger rooms
- Data outlets
- Credenza storage (for supplies or audio-visual equipment)
- Speaker phone
- Coat hooks
- Two large waste receptacles
- Acoustical considerations (keep conversation within room and attenuate sounds from entering room, i.e. sound attenuators on ductwork serving the space, as needed)
- Dedicated HVAC zone of control
- Door(s) with lite; key lock
- Carpeted floor; painted walls; acoustical ceiling

Optional Features

- Video conferencing capability
- Table top power/data access
- Podium
- Motorized projection screen

- Flat screen monitor w/anti-theft lock
- Wall mounted house telephone outside rooms with 20+ occupants
- Acrylic holder outside room for posting daily meeting schedule (Size: 8-1/2" x 11")

CLASSROOM

This room type is used primarily for teaching and should be set up for flexibility to accommodate various teaching styles (traditional instructor at front of class or circular set-up). Secondary use is for meetings. ***Note**: Lecture halls/auditoriums (building location and user specifics are not addressed in this SBA.)*

Minimum Standards

- Classrooms should accommodate a minimum of 20 participants with a minimum of 10 SF per person
- Tablet arm chairs should be used (some accommodating left handed participants). Tablet arms should be able to swing out of the way if the participant chooses not to use it. Chairs should stack or nest and be easily movable for maximum flexibility.
- Podium for instructor w/adjacent power/data outlets
- Speaker phone
- Motorized projection Screen/overhead projector
- Video Equipment display/storage or credenza
- Markerboard (minimum two 4' x 6')
- Tackboard (minimum 4' x 4')
- Clock
- Data outlets (at podium)
- Door(s) with lite; key lock
- Adjustable lighting level fixtures (dual switch for small rooms; dimming for large)
- Two large waste receptacles
- Coat hooks
- Hard surface floors; painted walls
- Dedicated HVAC zone of control

Optional Features

- Narrow, rectangular folding tables and chairs in lieu of tablet arm chairs
- Video conferencing capability
- Folding tables and chairs in lieu of tablet arm chairs
- Power/data outlets at tables
- Flatscreen monitor w/anti-theft lock
- Wall mounted telephone outside room

CONSULTATION ROOM

A small room for a physician or other clinical support to discuss treatment, protocol and/or follow up with a patient and their family/caregiver. This often is accomplished via A/V equipment or paper format.

Minimum Standards

- Room size to comfortably accommodate 4-6 people in either lounge seating or around a table with chairs (20 SF per person). Room for A/V equipment.
- 4' x 4' markerboard
- 4' x 4' tackboard
- Small credenza or desk to accommodate computer (to be viewed by all in room) and paper storage (take away instructions, brochures, etc.)
- Binder bin or "slatwall" components
- Speaker phone
- Power/data outlets for A/V equipment/computer
- Flatscreen television monitor

- Variable light levels in room – both overhead and table lamps
- Acoustical privacy
- Carpet; painted walls

Optional Features

- Staff assist button
- Additional square feet depending on location (OR, ICU, ED, etc.)

ON-CALL ROOM

These rooms are sleeping/resting rooms for on-call residents. House Officers Association should be consulted before moving or renovating and for current contractual requirements for these rooms.

Minimum Standards

- Room to be located in proximity to inpatient floor or service unit
- Minimum size to be 80 SF (8'x 10')
- Room to accommodate one single or one bunk bed with ladder, small desk for computer, desk chair
- One phone per bed
- One computer per room
- Power/data outlets
- Coat hooks
- Lockable storage bins or lockers, one per bed. Full length lockers preferred
- Door with key lock or keypad lock
- Acoustical privacy

Optional Features

- Lounge chair/recliner
- Wall mounted television
- Designated toilet room in reasonable proximity to on call room
- Clock
- Reading lamp(s)
- Baseboard night light
- Door with card reader
- Toilet/shower – accessible from on-call room
- Small refrigerator

PATIENT WAITING ROOM/AREA

These rooms/areas are used by patients & visitors to wait for clinic or procedure visits. Patient privacy is important as is maintaining a clear view across the waiting area by reception/check-in staff. Accommodations must be made for varying levels of patient ambulation and ability.

Minimum Standards

- Provide at least 15 SF per person
- Supportive, comfortable and easily cleanable seating
- Some bariatric seating and some double seating for parents/caregiver and children/patient
- Occasional and end tables
- Coat storage (hooks or closet)
- Wall mounted television (controlled by staff)
- Tackspace for patient notices
- Magazine rack(s)
- Computer workstation(s) for patients/visitors
- Artwork
- Visual access to reception/check-in

- Power/data as appropriate
- ”Hot phone” for patients (insurance verification, appt. scheduling, etc.)
- Direct and indirect lighting with dual switching
- Borrowed lite to corridor or lite in door
- Acoustical isolation
- Carpet; paint

Optional Features

- Refreshment station
- Wall protection/chair rail
- Lounge chair/recliner (inpatient rooms)

BILLING OFFICE

This office is used for patient consultation regarding matters of charges for services, arranging payment plans and other clinical financial matters.

Minimum Standards

- Office must be a minimum of 10’ x 12’ with two doors
- Door for patient access must have window to corridor or waiting room
- Door for billing clerk should be at back of office for exit away from office guest (security measure) with card reader
- Desk and workspace for billing clerk with desk chair
- Lockable binder bins above or behind desk
- Small office safe (stored under desk)
- Cash drawer
- Computer/printer
- Desk telephone
- Phone/data outlets
- Two guest chairs in front of desk
- General ceiling lighting with some lighting at work surface
- Acoustical privacy within office
- Carpet; paint

Optional Features

- Security buzzer/alarm system mounted to underside of desk (for clerk)

RADIOLOGY IMAGING ROOM

A suite of rooms for clinical imaging such as mammography, CT scans, fluoroscopy, etc. Usually consists of a control room, an imaging room and occasionally an equipment room.

Minimum Standards

- Minimum 9’ high ceiling
- Shielding according to code or as required by equipment type, manufacturer and University physicist
- Minimum acceptable working clearance around equipment to be determined by manufacturer
- Room humidification to be controlled per manufacturer’s recommendations
- Ground wire size to be in compliance with manufacturer’s requirements
- Floor slab to be sufficient depth to accommodate floor trough to equipment type & weight
- Power sources to mechanical/electrical systems to be coordinated (both on emergency or normal power)
- EPO shall be open contact parallel configuration
- Data/power outlets to be specific to equipment
- Lighting to include direct and indirect fixtures and dimmable downlights

- Heavy duty door (See FPD Design Guidelines)
- Window blinds in control or imaging room
- Sheet vinyl flooring, paint on walls, vinyl wall protection
- Recessed pulls on cabinetry
- Wall sign listing existing shielding installed within walls, ceilings and floors of imaging room
- Handwash sink, paper towel and soap dispenser, waste receptacle
- Apron rack and coat hooks
- Guest chair *(note: in MRI room, no metal fasteners may be used in chair)*
- Step stool (to assist patient access to equipment)

Optional Features

- Automatic door operator
- Intercom between control and imaging rooms
- Cubicle curtain
- Sharps container/glove boxes
- View boxes
- Patient Lift
- Art panel in ceiling light fixture
- Isolated power supply
- Tack board/marker board

RADIOLOGY READING ROOM

A room with one or more reading stations for reviewing/diagnosing digital images.

Minimum Standards

- Minimum cubicle size 7' x 7' for each reading station
- Lighting – not to exceed more than one foot candle (or below)
- Provide appropriate lighting levels for housekeeping
- Sufficient lighting for exiting
- Full length black cubicle curtain (no mesh at top of curtain)
- Black or charcoal acoustical wall covering and black acoustical ceiling
- Dark carpet
- Additional sprinkler heads to coordinate with curtain layout according to code
- Arm and armless chairs at workstations
- Specialty workstations for digital imaging reading
- Adequate ventilation to coordinate with curtain layout
- Power/data to accommodate workstations
- Layout of fire alarm notification appliances to take into account acoustical surfaces, ceiling-to-floor curtains and dark finishes

Optional Features

- n/a

STAFF LOUNGE/BREAK ROOM

This is a space for multiple staff to rest, renew and/or lunch away from the work environment. The room should be enclosed for privacy and adjacent to or in the work area.

Minimal Standards

- Door with lock
- Occupancy sensors for lights
- Lounge seating and/or tables and chairs
- Sink + counterspace *(Note: soap and paper towel dispensers at sink)*

- Refrigerator with ice maker, microwave oven (mount on millwork shelf under overhead cabinet – deep enough to accommodate plug with dedicated circuit), commercial coffeemaker (per current UM contract).
- Restricted appliances: toaster oven and popcorn popper
- Space for drinking water dispenser (outlet needed) + water bottle storage
- Large waste receptacle and recycling bins
- Tackboard, markerboard and fire board
- Clock
- Coat hooks
- Sheet vinyl floor with rubber base; painted walls

Optional Features

- Dishwasher and/or garbage disposal
- Vending machine(s)
- Computer workstations
- Staff mailboxes and/or magazine holders
- Adjacent toilet room(s)
- Card reader (at door)
- House phone and/or nurse call staff station (intercom)
- Staff lockers (size to be determined on each individual project)

PUBLIC AND/OR STAFF TOILET ROOM

These rooms can be single occupancy or multiple “stall” toilet rooms.

Minimum Standards

- Single occupancy – sheet vinyl floor, rubber base, painted walls (semi-gloss)
- Multiple occupancy – ceramic tile floor and walls
- Acoustical ceiling tile
- Solid surface counter with integral sink with mirror above
- Soap dispenser
- Hand dryer and/or paper towel dispenser
- Stainless steel partitions; floor mounted with ceiling support
- Fold-down “purse” shelf within stall; coat hook within stall
- Toilet paper dispenser per current UM contract
- Lighting over mirror/sink; recessed cove lighting at back of stalls
- New construction: floor mounted bariatric water closet
- Renovation: address bariatric requirements for existing water closet
- Occupancy sensor

Optional Features

- Ceramic tile floor/wall in single occupancy toilet room
- Hard ceiling
- Hands free entry door for multiple stall toilet room
- Hands free plumbing fixtures (sinks, water closets & urinals)
- Diaper changing deck

BEHAVIORAL HEALTH AREAS

Minimum Standards

- Apply design principles from the latest version of the “Design Guide for the Built Environment of Behavioral Health Facilities”.
- All tamper resistant screws shall be the “snake eye” type.

2101 Commonwealth Blvd, Suite B
Ann Arbor, MI 48105-5759
www.med.umich.edu/facilities/plan/

5.15: UMHHC - PATIENT AND STAFF PROTECTION: FALLS, BARIATRICS, LOW VISION, ERGONOMICS (SBA-M-H)

GENERAL:

In general, follow the guidelines below when specifying and designing facilities for UMHHC. Unless specifically indicated otherwise, these guidelines are not intended to restrict or replace professional judgment. Comply with all building and accessibility codes listed in 1.0 Codes and Regulatory Agencies. However, note that codes are minimums, but may not be best practice.

Architects, Engineers, Equipment Planners and Interior Designers shall take patient and staff safety into consideration throughout the design of facilities.

Many patients have low vision, limited mobility, and/or medical equipment issues. Staff areas should be designed with ergonomics in mind.

Note that Safety Management Services and Nursing have guidelines and staff training on Safe Patient Handling.

Integration of Safe Patient Handling and Movement program (SPHM) within UMHHC Capital Projects

The typical stages of a capital project that includes construction or renovation of a clinical space providing patient care are summarized below. At each project stage, roles and responsibilities have been clarified for integrating SPHM into capital projects.

1. ***Project Request:***
    a. Request for a construction investigation is entered into PDS2, using the "Facilities Planning and Development" link on the Support Services LINK web page. https://uhintwebspr1.mcit.med.umich.edu/hos/link/
    b. Facilities Planning and Development (FPD) Design Manager is assigned and shall include Safety Management Services (SMS) in the initial project investigation kickoff meeting for clinical projects. This ensures SPHM is addressed in step one of the process.

2. ***Investigation Phase:***
    a. SPHM Assessment initiated by SMS with the Unit/Clinic Area Manager.
    b. SPHM Manager Planning checklist is completed by Unit/Clinic Area Manager with assistance from SMS, and signed off by SMS Representation and Unit/Clinic Area Manager.
    c. SPHM Manager Planning checklist identifies facility and equipment needs for scope and budgeting purposes, and is provided to FPD Design Manager for inclusion in project budget and documentation.

3. ***Design Phase (after funding is obtained):***
    a. Upon project funding, the FPD Design Manager or AEC Project Manager will schedule a design kickoff meeting with the project team, including the Unit/Clinic Area Manager and SMS Representative. Any change in the original project funding request and final funding obtained will be brought forward at the design kickoff meeting, and problem solved with the Unit/Clinic Area Manager and FPD Design Manager to determine next steps.
    b. The Design Manager will work with the Unit/Clinic Area Manager, Capital Equipment Planner, and SMS representative to integrate SPHM identified from the checklist into the design.
    c. Design documents are developed and updated through the design process, and any funding changes are addressed.

d. FPD Design Manager to distribute 95% review drawings for final project team review. SMS representative and Unit/Clinic Area Manager shall review and provide comments on drawings to ensure that SPHM design requirements are met, prior to construction initiation.

4. Construction and Activation Phase

a. Project team shall problem solve any SPHM unexpected consequences as they arise.
b. Unit/Clinic Area Manager and FPD Design Manager shall agree upon on any design/construction changes that impact SPHM.
c. Unit/Clinic Area Manager will confirm SPHM requirements in the project have been completed within the construction schedule, and will notify the FPD Design Manager of any concerns.

PATIENT PROTECTION GUIDELINES:

Colors and patterns should be selected to clearly differentiate between floors and walls. Floor and wall patterns with sharp contrast should be avoided; however a contrast between floor and wall is desirable.

Corridor handrails should be provided in in-patient areas and outpatient settings where dictated by program. Note that sloped floors less than the code minimum for ramps may require handrails and intermediate landings to make travel ergonomic.

Designated barrier-free toilet and bathing facilities must meet code, but all patient toilet and bathing facilities should be equipped with grab bars. All patient showers should be equipped with built in, folding seats capable of supporting a minimum of 900 pounds.

All toilets should support a minimum of 1000 pounds, which requires they be floor mounted. Special bariatric toilets, capable of supporting even greater weights, should be considered where clinically appropriate.

Provide patient emergency nurse call pull cords in toilet rooms and in bathing facilities within clinical areas. Outpatient clinics should include these pull cords unless specifically not required by clinical and risk management review. Refer to UMHHC door hardware design guidelines for emergency access requirements into patient toilet and bathing facilities.

The distance between the patient bed and the toilet facility should be minimized. Ideally a handrail should be installed between the bed and toilet facility. A nightlight should be provided to light the path. Do not install grab bars or towel bars on doors.

Slip resistant flooring and walk off mats should be specified. Loose walk off mats should not be provided.

All accessories and fixtures should be installed with in-wall blocking to secure the item to the wall. Exceptions would be small items that are not expected to bear weight, such as soap dispensers and hand sanitizers.

Seating choices in an area should accommodate bariatric patients, and include chair arms in many locations. Wheelchairs must be accommodated within the seating arrangement.

Additional clearances should be considered for oversized wheelchairs and transportation, and in bariatric service areas.

Glare should be minimized in materials, exterior windows, daylight control and in lighting selection. Within the sight path, maximum to minimum lighting levels should not exceed a factor of 10. Consider the effect of windows and finish materials.

Even small thresholds and building expansions joints can be problematic for patients and staff moving IV poles or other equipment, or using canes, crutches or walkers. Changes in floor elevation should be avoided; when unavoidable, care should be taken to create a smooth transition.

Many patients at UMHHC are in oversized wheelchairs or scooters, and spaces should be designed to accommodate them. Rooms accessed by patients should be provided with oversized doors per the door design guidelines, and consideration given to door hold open devices, automatic operators, and delayed closers.

To the greatest extent possible, all outpatient areas should be accessible by stretcher.

Staff and patient ergonomics, length of reach, and flexibility for individual ergonomics should be considered in the design, for example: reception desks, work stations, appliances and equipment locations, trash receptacles. Height adjustable treatment and transport surfaces should be included.

Safety Management Services has extensive information available on patient lift design and installation.
For permanently installed lifts, consider:

- Structural design of the floor or roof deck above.
- Ceiling locations of sprinklers, smoke detectors, lighting and HVAC supply and returns, soffits, booms, telemetry and wireless repeaters, privacy curtain tracks, IV tracks and AV equipment.
- Wall location of cabinetry, AV and medical equipment in relation to the lift tracks and travel.
- An accessible location for the lift parking station with a dedicated electrical outlet, normal power, for charging.

In locations where mobile lifts might be used, working clearances and maneuvering space to operate the chosen devices, including:

- Turning radius
- Door and pathway width clearance
- Load/unload clearance at all transfer destinations.
- Smooth, level, low friction finished floor surface without significant threshold barriers or obstacles to allow free base movement during use.
- Retrieval clearance at high risk fall locations, to allow transfer of fallen patient from the floor.
- Compatibility of the furnishings with the base support of the lift.
- Storage area for each piece of equipment and accessories identified where it will be convenient and readily available.
- Electrical outlet for charging in storage location for all battery powered equipment.

At all locations where lifts or other SPH (Safe Patient Handling) equipment are used, storage should be planned for clean equipment, soiled holding space for soiled equipment, space for a laundry hamper for soiled slings and fabric equipment, staging area for clean delivery and soiled pick up.
At off-site locations, consider an on-site laundry washer/dryer or drying rack.
Point of service cleaning of safe patient handling items, including space to allow fabric items to hang to dry after disinfection.

Facilities should be designed to accommodate the future installation of patient lifts.

Any glass doors and guardrails should be designed to clearly indicate glass is present; i.e. patterns or other materials included in the design.

No power, data, other cords or other trip hazards should run across walking paths on floors.

OUT TO BID

DESIGN GUIDELINES

1.0 CODES AND REGULATORY AGENCIES

2.0 PROJECT PROCEDURES

3.0 SUSTAINABILITY

4.0 SPECIAL INSTRUCTIONS TO DESIGNERS

5.0 SPECIAL BUILDING AREAS

6.0 TECHNICAL REQUIREMENTS

6.1 ARCHITECTURAL

6.2 MECHANICAL

6.3 ELECTRICAL

6.4 SITE/CIVIL

7.0 MASTER SPECIFICATIONS

8.0 PREFERRED MANUFACTURERS LIST

9.0 STANDARD DETAILS AND SCHEDULES

10.0 CHANGES TO DESIGN GUIDELINES

6.0 TECHNICAL REQUIREMENTS

Technical Sections (CSI Divisions 1 -14, 21-23, 26-28, 31-33) contain system specific design criteria and design approach.

For University of Michigan Hospitals and Health Centers (UMHHC) funded projects, click here for a list of T echnical Requirements specific to work at UMHHC.

6.1 Architectural

6.2 Mechanical

6.3 Electrical

6.4 Site/Civil

© 2018 Regents of the University of Michigan
Design by Michigan Creative

326 East Hoover, Ann Arbor, MI 48109-1002
Phone: (734) 763-3020
Contact Us

OUT TO BID

DESIGN GUIDELINES

1.0 CODES AND REGULATORY AGENCIES

2.0 PROJECT PROCEDURES

3.0 SUSTAINABILITY

4.0 SPECIAL INSTRUCTIONS TO DESIGNERS

5.0 SPECIAL BUILDING AREAS

6.0 TECHNICAL REQUIREMENTS

6.1 ARCHITECTURAL

6.2 MECHANICAL

6.3 ELECTRICAL

6.4 SITE/CIVIL

7.0 MASTER SPECIFICATIONS

8.0 PREFERRED MANUFACTURERS LIST

9.0 STANDARD DETAILS AND SCHEDULES

10.0 CHANGES TO DESIGN GUIDELINES

6.1 ARCHITECTURAL

1 GENERAL REQUIREMENTS	Last Update	Previous Version	Replaces
013100 Coordination	July 2014	April 1995	01040 Coordination
013639 Tree Preservation	July 2004		01141 Tree Preservation
017329 Roofing Materials Cutting and Patching	June 2014	April 1995	01045 Roofing Materials Cutting and Patching
017823 Operations, Maintenance and Training	February 2008	April 1995	01730 Operations, Maintenance and Training
3 CONCRETE			
033000 Concrete	July 2014	April 1995	03300 Concrete
4 MASONRY			
042000 Unit Masonry	March 2014	April 1995	04200 Unit Masonry
5 METALS			
051000 Metals	May 2014	April 1995	05100 Metals
6 WOOD AND PLASTICS	Last Update	Previous Version	Replaces
7 THERMAL AND MOISTURE PROTECTION	Last Update	Previous Version	Replaces
072700 Air Barriers	Replaced by Building Envelope	January 2011	
075000 Roofing Systems and Accessories	July 2016	July 2015	07500 Roofing Systems and Accessories

078413 Firestopping	July 2014	February 2008	07841 Firestopping
079200 Joint Sealant	June 2014	June 2012	07920 Joint Sealant
8 DOORS AND WINDOWS	Last Update	Previous Version	Replaces
081113 Hollow Metal Doors and Frames	October 2014		081113 Hollow Metal Doors and Frames
081416 Flush Wood Doors	July 2014	February 2008	08211 Flush Wood Doors
08370 Frames, Power Operated Doors	Removed October 2014 and incorporated into 081113 Hollow Metal Doors and Frames and 087100 Finish Hardware		
084113 Aluminum Framed Entrance and Storefront Systems	January 2012	May 2011	08410 Aluminum Entrance and Storefront Systems
084413 Glazed Aluminum Curtain Wall	November 2011		08911 Glazed Aluminum Curtain Wall
085113 Aluminum Windows	January 2012	August 2011	08520 Aluminum Architectural Windows
087100 Finish Hardware	October 2014	October 2010	087100 Finish Hardware
088000 Glazing	March 2018	October 2016	08800 Glazing
9 FINISHES	Last Update	Previous Version	Replaces
092116 Gypsum Board Assemblies	January 2014	April 1995	09260 Gypsum Board Assemblies
093000 Ceramic Tile and Waterproofing	May 2014		
095100 Acoustic Ceilings	November 2017	July 2014	09510 Acoustic Ceilings
096229 Cork Flooring	May 2014		
096500 Resilient Flooring	May 2015	October 2013	09650 Resilient Flooring
099100 Low-Emitting Paint And Coating Products	August 2011		09900 Low-Emitting Paint And Coating Products
10 SPECIALTIES	Last Update	Previous	Replaces

		Version	
101400 Signage	November 2017	February 2017	10400 Signage
102113 Toilet Compartments	January 2014	February 2008	10162 Toilet Compartments
102800 Toilet Accessories	May 2015	February 2015	10810 Toilet Accessories
104400 Fire Extinguishers	September 2014	April 1995	10520 Fire Extinguishers
11 EQUIPMENT	Last Update	Previous Version	Replaces
115313 Laboratory Fume Hoods, Bsc's, Specialty Hoods And Acid Flammable Cabinets	July 2011	June 2004	11610 Laboratory Fume Hoods, Bsc's, Specialty Hoods And Acid Flammable Cabinets
12 FURNISHINGS	Last Update	Previous Version	Replaces
122000 Window Treatment	March 2014	April 1995	12500 Window Treatment
123553 Laboratory Casework	May 2015	April 1995	12345 Laboratory Casework
13 SPECIAL CONSTRUCTION	Last Update	Previous Version	Replaces
132100 Controlled Environment Rooms	September 2014	June 2014	13041 Packaged Environmental Room
14 CONVEYING SYSTEMS	Last Update	Previous Version	Replaces
140000 Conveying Systems – General Requirements	February 2014	September 2012	14000 Conveying Systems – General Requirements
144200 Wheelchair Lifts	Request from Designer	February 1999	14420 Wheelchair Lifts

326 East Hoover, Ann Arbor, MI 48109-1002
Phone: (734) 763-3020
Contact Us

© 2018 Regents of the University of Michigan
Design by Michigan Creative

DESIGN GUIDELINE 013100
COORDINATION

Scope

All work in ceiling spaces, mechanical rooms, reflected ceiling plans, etc. shall be coordinated to provide maximum accessibility. Consider additional drawing sections or extraordinary construction measures to assure this. Pay particular attention to this when the user and/or other design staff have consciously decided to install mechanical equipment in marginally accessible locations.

Ladders, Catwalks and Platforms

Ladders, stairs, catwalks and platforms should be provided to areas where access is required for inspection or maintenance. Access to fans, balancing and flow control dampers, steam traps, sanitary clean outs, and sensors located high above suspended ceilings are particularly important. Do not rely on walking across duct work to reach these components.

Catwalks and / or platforms should be provided in accessible shafts and plenums for inspection maintenance and/ or future modifications.

In Mechanical rooms arrange ceiling suspended fans with clearance below to allow access from a jack stand.

Drawing Requirements

The A/E must place notes on the drawings, as appropriate, directing the Contractors to coordinate all work to allow free access to mechanical and electrical equipment for servicing. Particular attention must be given to assure access to panels, doors, service entrances, etc.

The removal of other components such as light fixtures in order to service any equipment shall be discouraged. Access routes should not encourage abuse (i.e., stepping on ductwork). The specifications should require that coordination drawings be submitted by the General Contractor for major renovation and new construction projects. These drawings shall clearly show the priority by trade required to assure access to the equipment and devices in the ceiling cavity. Of particular importance is the free access to all variable volume boxes, reheat coils and their controls -- including free and easy removal of the entire box. Nothing shall be located beneath these devices. (Fire protection or other piping is to be offset around the device footprint, etc.) The A/E must witness the construction to assure that the required accessibility is achieved.

Design Professional shall mark access panel locations on plans to promote coordination.

DESIGN GUIDELINE 013639
TREE PRESERVATION

Introduction
This document delineates requirements for tree preservation on the University of Michigan campus.

Tree Survey
A tree survey will be done as part of the pre-design work for campus development projects. The survey will show the locations of the existing trees located within the bounds of the site, as well as on any surrounding areas that may be impacted by the project. The Design Manager (DM), together with the University Forester (UF), shall categorize the trees on the survey as follows:

- Memorial trees (including tree tag #) and their associated plaques.
- Trees to remain and be protected.
- Trees that can be relocated (transplanted).
- Significant trees that can be relocated.
- Significant trees that can be removed.
- Trees that are not significant or are of low quality.

If the preliminary survey includes significant trees or memorial trees that are to be relocated or removed, it shall be submitted to the Associate Vice President for Facilities and Operations (AVPFO) for approval. The survey shall be accompanied by a written summary prepared by the DM, the UF and the University Planner that describes the significance of the trees and the reasons for relocation and/or removal.

The tree survey as approved shall be provided to the Architect/Engineer (A/E). The A/E shall develop building and site concepts that are in accordance with the requirements identified on the survey. Deviation from the tree designations and dispositions as shown on the tree survey will not be permitted.

Protection
Existing trees that are to be preserved shall be protected during all phases of the construction project.

Specific Procedures for Protecting Trees
- The Contract Documents shall identify all trees to remain and to be protected, including those outside the construction limit line. The protective zone around each tree shall be clearly identified. The protective zone for significant trees shall not encroach on the canopy dripline unless there is a compelling reason why this is not practical. In such a situation, approval for the deviation must be obtained from the UF.
- For other trees, the protective zone shall extend to the tree canopy drip line where possible.
- The Construction Documents shall instruct the Contractor that no activity, including parking or storage of materials, will be allowed within the protective zones, and that protective fences or other methods of protection will not be moved, removed, or altered.

- Include aeration and gator bags as remediation measures for trees that have been negatively impacted by construction.

Relocation or Removal

Relocation and transplantation of existing trees will be accomplished by either tree spade or by the balled and burlapped method. The UF along with the University Planner will determine the new location.

Removal includes cutting the tree down and debris disposal

Specific Procedures for Removal and Relocation

- During design the UF and DM will decide whether the removal will be done by in-house crews or by the Contractor.
- The project responsible for removing the trees will fund the cost of transplantation or permanent removal by cutting the tree down.
- If the Contractor is removing trees, include instructions that felled trees and all associated debris shall be removed from the project site within 24 hours.
- Replacement trees will replicate the individual or cumulative caliper of the trees removed. For example, two 5" caliper trees could be replaced with one 10" caliper tree or five 2" caliper trees. The replacement trees will be planted on the project site or elsewhere on campus as determined by the UF and UP.

DESIGN GUIDELINE 017329
ROOFING MATERIALS CUTTING & PATCHING

Scope

Scope: Cutting and patching of roofing.

Related Sections

U-M Design Guideline Sections:
6.1 075000 Roofing Systems and Accessories

U-M Master Specification Sections:
7.2 017329 Cutting and Patching

Reference Documents:
National Roofing Contractor's Association "Roofing and Waterproofing Manual"

Design and Installation Requirements

Important considerations to remember when specifying roofing cutting and patching are:

Warranty patching work must be performed in a manner which will not void the manufacturer's warranty. Installers must be licensed by the roofing manufacturer to perform patching work. All AEC/ Construction Services improvement projects affecting newer roofs within the first 2 years of installation shall contact the original installers. They carry the 100% labor/ materials repairs. After 2 years the contractor shall be a licensed applicator for the manufacturer for the remaining years on the roof warranty. Design Manager shall provide existing roofing system manufacturer and warranty information.

For asbestos test cuts, worker must have certification for asbestos sampling. Contact OSEH for coordination and procedures.

Roofing contractor shall provide min. 2 year workmanship warranty for patching.

Include the following information in project specifications:

Quality Assurance article of the cutting and patching specification:

Installer Qualification:

Arrange for cutting and patching of roofing systems by firm experienced in similar work, and licensed by manufacturer of roofing system to perform required repair work.

Pre-Construction Conference:

Contractor to arrange, through the Construction Manager and attend a meeting with a representative of roofing firm to determine procedures for cutting and patching roofing system.

In the "Part 2 - Products" portion of cutting and patching specification, include your standard language conveying the following ideas:

Use materials for patching identical to existing materials. Use materials for patching that result in equal-or-better performance characteristics.

In the "Part 3 - Execution" portion of cutting and patching specification, include the following requirement:

Before cutting and patching roofing materials, obtain the Construction Managers approval to proceed.

DESIGN GUIDELINE 017823
OPERATIONS, MAINTENANCE AND TRAINING

Scope

Operations and maintenance costs are of prime concern to the University and thus the A/E shall design the systems to be both energy efficient and easily maintainable.

Where justifiable and appropriate, systems and components are to match existing. A written justification for sole-sourcing is normally required in such cases.

Systems are to be simple to operate and designed to fail in the least harmful position. Protect mechanical and electrical services from physical abuse. Provide permanent access routes as appropriate.

Show on plan and elevation drawings required clearances at equipment needed for maintenance.

Related Sections

U-M Design Guideline Section:
Section 230000 – Basic Mechanical Requirements

U-M Master Specification Sections:
Section 017823 – Operation and Maintenance Manuals
Section 230900 – Mechanical Systems Controls

Training Requirements

The A/E is responsible for meeting with the U of M Maintenance Manager (contact the Design Manger) early in the design phase of the project in order to determine the number of training sessions required, and to reflect this in the construction specification. Most training should be conducted both in a classroom and at the system/equipment location.

The need for training will vary, in part depending on the complexity of a system, its uniqueness (at the U of M), and the familiarity of the area maintenance staff with that system, material, or application.

For particular equipment, materials or components, the Contractor or supplier will normally conduct training. For complex systems such as HVAC systems, special lighting controls or communications systems, the A/E must conduct the training so that the design intent can be fully explained. It may be appropriate for systems training to be conducted jointly with a major vendor (e.g., the automatic temperature controls contractor may assist the A/E in presenting an HVAC training session).

Operating and Maintenance Instruction Manuals

Four sets of **job specific** operations and maintenance manuals shall be provided for each project. The construction specifications shall require the contractor to submit job specific O & M manuals a minimum of two (2) weeks prior to any scheduled training. The manuals shall be collected in indexed three ring binders and contain manufacturer's operating and maintenance literature for every equipment item furnished for the project. Generic wiring or piping schematics are NOT acceptable; they must be job specific, reflecting the actual furnished equipment, including all options and interfaces with other equipment or systems.

DESIGN GUIDELINE 033000
CONCRETE

Scope

Designing and specifying concrete work including structural, slab on grade, site work, sidewalks, etc.

Related Sections

U-M Design Guidelines:

6.4 321000 Walks, Roads and Parking Paving: Sidewalks

6.1 093000 Cermic Tile and Waterproofing

U-M Master Specification Sections:

7.2 033053 Miscellaneous Cast-in-Place Concrete

Design and Installation Requirements

Design Requirements

Structural Elements: ACI 318, designed for calculated structural requirements. A/E's may use their own office standards for details such as chamfered vs. square edges. Include the following language in specifications:

Water shall not be added to concrete at the jobsite.

Floors, General: The University supports the use of floor flatness and levelness "F-numbers" as described in ASTM E 1155-87 and ACI 117. Flatness and levelness specified in terms of "1/8-inch in 10 feet" or similar descriptions are difficult to enforce. Job-site quality control will be provided by a testing firm engaged and paid for by the Owner, unless otherwise determined by the Design Manager.

Strength: As required, but not less than 3500 psi at 28 days.

Flat Slabs-On-Grade: Design slabs-on-grade to comply with the following requirements:

- Vapor Barriers: Usually required. Omit vapor barriers only in consultation with Design Manager. The practice of perforating vapor barriers to avoid the phenomenon of "slab curling" is not acceptable.
- Thickness: Comply with the following:
  - General: 4 inches, or greater if required by expected live load.
  - Mechanical Rooms: 5 inches, or greater if required by expected live loads.
  - Strength: As required, but not less than 3000 psi at 28 days.

Equipment Bases and Foundations:

- Minimum Compressice Strength: 4000 psi at 28 days.

Finishes:

- Chamfer exterior corners and edges of permenantly exposed concrete.
- Mechanical, electrical, storage rooms etc. shall have clear sealed finish. Rooms that are typically unoccupied and have an exposed concrete floor shall be sealed for easier maintenance.
- Include moisture, alkalinity and adhesion testing in specifications to verify concrete is cured appropriately to accept finishes.

Floor and trench drains:

- Design professional shall provide details, minimum 3"=1'-0" for each type of floor or trench drain. Detail shall include termination of surface finish materials, crack isolation membranes, and waterproofing materials.

DESIGN GUIDELINE 042000
UNIT MASONRY

Scope

Guidelines for designing and specifying clay and concrete masonry and accessories.

Face Brick Selection

Brick Selection Process: The Design Manager will coordinate brick selection with the A/E, University Planner and University Architect. Brick selection prior to bidding is required. If cash allowances must be included, be sure to provide for special shapes. Cash allowance prices must be approved by the Director of Construction Management before bidding. Typically the selection process is as follows:

- Step 1 - Early in design phase, determine if a brick selection is required. Discuss with A/E, University Architect and University Planner to determine the criteria / objectives of the selection.
- Step 2 - The A/E shall contact several brick suppliers and formally request a submittal that will meet the criteria/objectives determined in step 1. The brick supplier's submittal shall include a thin 1' x 2' sample and a statement of unit cost along with any necessary specification data.
- Step 3 - The A/E will compile the submittal information and eliminate any submittals that clearly do not meet requirements or criteria. The remaining choices shall be reviewed at the site with the Design Manager, University Architect and University Planner.
- Step 4 - The suppliers of the acceptable samples shall be requested to build a mock-up panel 4' x 4', at the site, for final selection.
- Step 5 - Chosen samples (should seek a minimum of three) shall be included in the specification and bid as a part of the General Contractor's responsibility.
- Step 6 - The specifications shall call for the supplier of choice to build a 4' x 6' mock-up panel, at the site, that will be used for confirmation of match with mock-up panel referred to in Step 4, mortar selection, and installation workmanship. This final panel will be the panel used to measure appearance and workmanship for the project. The specifications must direct the General Contractor to construct the 4' x 6' mock-up panel to match the 4' x 4' panel and to meet certain workmanship criteria. This 4' x 6' mock-up panel must be reviewed and approved by the A/E and the owner. The General Contractor is entitled to include any of the specified brick material in his bid price. In addition, specify that the General Contractor must remove all existing mock-up panels from the site by the completion of the project.

Face Brick Specification

General**:** Brick complying with the ASTM C 216 face brick standard is not necessarily durable in this climate, nor suitable for installation in every season; nor does C 216 address the important issue of initial rate of absorption. Consequently, the University requests A/E's to modify ASTM C 216 as indicated below.

Modifications of ASTM C 216**:** Modify face brick standard as follows:

- Strength - As determined by the A/E.
- Type and Grade - Both type and grade must be clearly specified, since the ASTM C 216 default values are not acceptable:
    - Type - Suitable for architectural effect intended, but if other than FBX, coordinate with Design Manager.
    - Grade - SW, in all applications.

ASTM C 216 Table 2 "Physical Requirements" - Add the following Initial Rate of Absorption requirement:

- Initial Rate of Absorption - Not more than 22 gram/min./30 sq. in.; where cold weather installation is anticipated, not less than 6 gram/min./30 sq. in.
- If, during selection process, face brick with an IRA higher than 22 gram/min./30 sq. in is selected in order to match existing face brick, limit the average saturation coefficient to less than 0.74, or alternatively, limit absorption to 8.4 percent. Brick outside these limits has a higher potential for durability problems.

Coring - Modify Article 10 to delete frogged brick. Frogged brick is not permitted since incompletely filled cavities permit moisture to collect, possibly freezing, lifting brick and destroying mortar bond. A 3-core pattern is preferred over other patterns, whenever possible, for improved mechanical keying.

Waivered Brick: Where face brick that has been waivered under ASTM C 216 is selected in order to match existing face brick, require manufacturers to submit written certification of acceptable past performance in the local climate.

Finishes Over Face Brick: Do not include painting or waterproof coatings such as silicone over clay masonry units. Specify that brick units with factory applied silicone coatings are not acceptable.

Installation: Some brick exhibits a wide range of color between those brick near the outside of the stack during firing, and those near the inside. Unless masons take care to mix these brick at the site, the resultant effect may be an unpleasant grouping of dark and light colors. Consequently, for brick susceptible to this phenomenon, require that brick be broken out of pallets and intermixed on the site before installation, to ensure pattern randomness.

Cleaning: Avoid specifying acidic cleaners for masonry in areas adjacent to stone surfaces, and where existing landscaping materials may be damaged by run-off.

Concrete Masonry Units (Block)

Standards**:** No special standards beyond ASTM C 90 requirements.

Mortar for Unit Masonry

Mortar**:** The University accepts the use of either Portland cement/lime mortar or masonry cement mortar. Calcium chloride is not permitted as an additive.

Mortar Spreading Technique**:** Specify that mortar be spread using the "beveling" technique described in BIA 21C-78. Beveling helps keep cavities free of mortar droppings, and assists in filling 3-hole brick cores.

Joints**:** Specify tooled joints in masonry exposed to weather. Avoid the use of raked, struck, or other similar joints in masonry unless units will not be exposed to weather. Require full head joints on brick masonry.

Flashing

Lead and asphalt coated lead materials are not acceptable due to the reputed incompatibility of lead and mortar, and potential toxicity issues. PVC and similar plastic flashings are not acceptable due to brittleness problems caused by stress or loss of plasticizer.

Installation**:** The following requirements are based on BIA and NCMA recommendations: Mechanically attach flashings to substrate for support. Adhesive attachment is not acceptable. Extend flashing over openings at least 4-inches beyond opening sides and form ends into dams. Carry flashing out of wall to ensure proper function. Because manufacturers of asphalt coated or rubberized asphalt flashings require their products to be cut off 1/2-inch behind the wall face, combination flashings consisting of rubberized asphalt sheet terminating in metal through-wall flashing pans is recommended.

Thin Brick

Installation and use of thin brick products are an option for interior applications only. Care shall be taken in pattern layout and jointing to preserve the look of full depth masonry.

Thin brick installation is not accepted in exterior applications.

Miscellaneous

Weep Holes: Construct weep holes in the head joints in exterior wythes of the first course of masonry immediately above embedded flashings and as follows:

- Form weeps by keeping head joints free and clear of mortar. Cotton wicks and plastic tubes are not acceptable.
- Space weep holes 24 inches o.c.
- The use of brick vents for weep holes is not encouraged.

Cavity Drainage Materials: - Provide free-draining mesh, made from polymer strands that will not degrade within the wall cavity.

DESIGN GUIDELINE 051000
METALS

Scope

Structural steel, metal deck, and metal fabrications.

Design and Installation Requirements

Structural Steel

Structural Steel Lintels and Shelf Angles - Lintels and shelf angles provided for support of masonry veneers exposed to weather must comply with the following requirements:

- Units must be hot-dip galvanized after fabrication or stainless steel.
- Leg thickness must be sized for structural loads, but not less than 3/8-inch thick.
- All exposed structural steel, not encased in fire protection, or composed of stainless steel shall be painted.

Metal Roof Deck - All metal roof deck must be hot-dip galvanized (ASTM A 525 G60 coating).

Miscellaneous Metal Fabrications

Guardrails and Handrails - Specify hot-dipped galvanized steel for all exterior locations exposed to weather. Alternatively, stainless steel, bronze, anodized aluminum and other materials may be used with the approval of the Design Manager.

Handrails in concrete paving and walks may be set in sleeves or core drilled holes. Depth of core must be not less than 4-inches deep and of a diameter not less than 1-inch wider than outside pipe diameter. Set rails in non-shrink, erosion resistant grout.

DESIGN GUIDELINE 075000
ROOFING SYSTEMS AND ACCESSORIES

General

In general, follow the guidelines below when designing and specifying roofing systems. Unless specifically indicated otherwise, these guidelines are not intended to restrict or replace professional judgment.

Related Sections

U-M Design Guideline Sections:
3.2 Energy and Water Conservation
4.8 Fall Protection on Roofs
6.0 DG 051000 Metals
8.2 Architectural Preferred Manufacturer List

UM Master Specifications:
7.0 MS 075316 - Chlorosulfonate-Polyethylene (CSPE) Roofing
7.0 MS 075323 – Ethylene-Propylene-Diene-Monomer (EPDM) Roofing

Reference Documents:
ANSI/SPRI VF-1 External Fire Design Standard for Vegetative Roofs
ANSI/SPRI RP-4 2008 Wind Design for ballasted Single-ply Roofing Systems
ANSI/SPRI RP-14 Wind Design Standard for Vegetative Roofing Systems

Roofing Materials

General - Specify that roofing materials for a given project are provided by a single manufacturer, and that all accessory materials be approved by that manufacturer as necessary to obtain the manufacturer's warranty.

Preferred System - Fully Adhered, Single Ply, Black, Ethylene Propylene Diene Monomer (EPDM)

Alternative systems listed below may be preferred for specific applications, such as aesthetics, condition of installation, or chemical resistance. Consult with the Design Manager for advice and consent regarding the use of other systems.

Alternative Single-Ply Systems

- EPDM, White: When considering the use of fully adhered, single ply white Ethylene Propylene Diene Monomer (EPDM) to reduce heat island effects, energy modeling shall be used to determine potential savings for white (high-albedo) vs. black roofs. Discuss results of energy modeling with the Design Manager.
- EPDM, Inverted and Ballasted (IRMA) and CPE: Not acceptable.

- Hypalon (CSPE): Consider fully adhered hypalon systems when resistance to chemical attack is paramount, such as on roofs with a substantial number of fume hood exhaust stacks or where repeated exposure to oil or coolant fluid leakage is likely. Mechanically attached systems are acceptable when desirable for condition of installation.
- Poly Vinyl Chloride (PVC) and Thermo-Plastic Olephine (TPO) Membranes: Acceptable under vegetative roof systems only, 60 mils thick minimum.
- Atactic PolyPropylene (APP) and Styrene Butylene Styrene (SBS) Modified Asphalt Membranes: Not approved for use, except for small roof areas and patching.

Alternative Roofing Types - Other types of roofing systems that may be considered include natural slate, clay tile, asphalt shingle, and standing seam sheet metal roofs. There are currently no explicit University standards for these systems. Comply with manufacturer's and industry standards, and professional judgment for materials and installation.

- Composite materials with the appearance of slate or clay tile are generally not approved for use.
- Multiple-ply built-up asphalt roofing systems are not permitted on campus areas due to objectionable odors.
- Vegetative roof systems are new to the University and are used in select applications. Close coordination with Design Manager is required for system selection and detailing.

Vapor Retarder

Use of asphaltic vapor retarders are not preferred due to objectionable odors.

Walkway Protection - For single-ply roof systems, provide walkway protection from roof access points to all roof mounted equipment requiring routine maintenance. Walkway protection should generally consist of a minimum 100-mil thick EPDM or Hypalon membrane, to match roofing material.

Provide minimum of 4 sq. ft/ of walkway pad directly adjacent to equipment access panel for toolbox and parts to be set down during routine maintenance.

Insulation - Comply with DG 3.2 requirements. Polyisocyanurate is the acceptable insulation material. Insulation products shall be 25 psi minimum. Provide insulation coverboard, 200 psi minimum.

Accessories

- Roof sumps - Specify all cast iron components.
- Roof and equipment hatches - Specify the following minimum requirements
    - Anodized aluminum hatches with insulated double wall lids and insulated double wall curb frames
    - Integral mounting flange and counter-flashing.
    - Heavy duty stainless steel hardware.

- Access ladders - Specify galvanized steel ladders fabricated from tube steel side rails with 1-3/4" tread grip rungs. Extend side rails above top rung. Paint finish optional.

Quality Assurance

Pre-Installation Conference - Require conference for all University roofing projects, including small repair or penetration work. This conference should be attended by, at least, the general contractor, the roof installer, Design Professional and University Construction Manager.

Warranty Requirements - Comply with the following requirements for warranties:

- New Membrane Roofs, Single-Ply Systems: Require a 15 year, single source warranty covering the full roofing system (including all accessories) for materials and labor.
- New Membrane Roofs, Vegetative Roof Systems: Require a 30 year, single source warranty covering the full membrane/waterproofing system (including all accessories) for material and labor.
- Repairs/Modifications: For roofs still under warranty, require that the original manufacturer's material be used and that the installer be approved by the manufacturer. Contractor should notify roofing manufacture with the warranty and University Project Manager in writing of the changes to the roof under warranty.

Design Requirements - New and re-roofing projects

General

- Provide access to all areas of roof.
- All roof work should be watertight and weatherproof, on a daily basis, before contractor leaves the project site.
- Project must comply with the requirements outlined in DG 4.8 Fall Protection on Roofs.
- Maintain minimum of 36” clear between mechanical units and adjacent structures, units, walls etc. for roofing repair and or replacement in the future.

EPDM, White Roofs (and other high albedo roofing systems) – An energy model shall be completed to determine payback and reviewed with the Design Manager. Also, ensure that the following conditions are met:

- Provide dewpoint calculations.
- Specify conductors and wiring, used to control rooftop HVAC equipment, capable to withstand reflected heat from the roof.
- Design placement of rooftop equipment to prevent ice buildup and additional risk for maintenance staff.

Flat Roof Design - Generally comply with good roofing design practices outlined in the NRCA "Handbook of Accepted Roofing Knowledge". Specifically, ensure that the following conditions are met:

- Slope roof as required by Code and not less than 1/4-inch per foot. Pitch roof by either sloping structure or by using tapered insulation.

- Slopes to drain should be unobstructed by above-roof building elements, equipment curbs, or similar objects. Where such obstructions are unavoidable, provide cants, saddles or other means to restore positive pitch to drain.
- Maximize parapet heights and run single-ply roofing materials up, over the top and down the face of parapets beneath stone coping caps and beneath metal trim. Metal coping caps are not preferred.

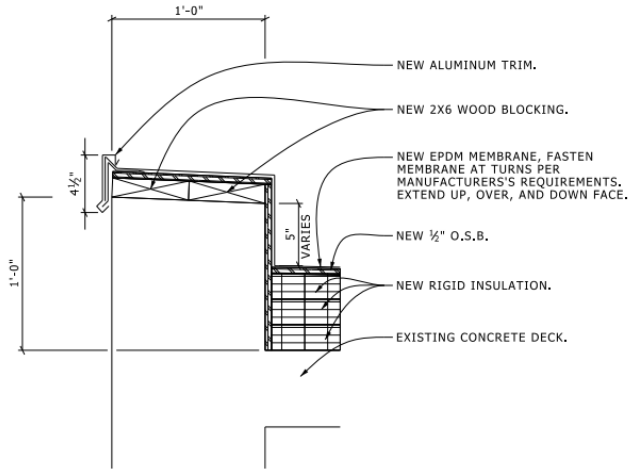

- Optional Roof Edge Detail **ROOF EDGE DETAIL**
- Specify that no EPDM single-ply membrane field seams be located within 5 feet of sumps (3 feet for Hypalon).
- Specify that no buck laps are permitted anywhere in single-ply roofing membranes.
- Specifically reference Factory Mutual 1-60, 1-75, or 1-90 roof requirements, as appropriate for the application.

Vegetative Roof Design - Generally comply with good roofing design practices outlined in the NRCA "Vegetative Roof Systems Manual". Specifically ensure that the following conditions are met:

- Limit slope design to a 2 to 12 pitch. A sloped structure is preferred to achieve necessary roof pitch in lieu of the use of tapered insulation.
- Provide a 6 foot minimum continuous fire break around roof edge, rooftop structures and rooftop equipment that contain combustible vertical surfaces. Non-vegetative fire breaks should consist of an ASTM E108, Class A system.
- Provide an 18 inch minimum continuous break around roof edge, rooftop structures and rooftop equipment that contain non-combustible surfaces.
- Comply with all manufacturer requirements to maintain warranties for underlayment systems.

- Provide access to at least one fire hydrant.

- Underlayment systems should consist of, at a minimum, a waterproof membrane system, membrane protection, root barrier, drainage/water retention layer, aeration/water retention layer, filter layer and soil substrate.

- Install indigenous and/or adaptive plantings only.

- Inverted insulation systems are not acceptable. Insulation must be installed below the waterproof membrane; the compressive strength must be appropriate for the expected dead and live loads of the selected system.

- Waterproofing membrane should be fully adhered to the substrate, not mechanically fastened or loose laid.

- Membrane flashings should be a minimum of 4 inches above the surface of the growth medium.

- For existing buildings, coordination with a structural engineer is required to determine the live load capacity of the existing structure.

- Structures supporting vegetative roofs should have a minimum live load capacity of 100 pounds per square foot or meet the requirements of the code, whichever is more strict.

- Vector mapping systems are recommended, but not required. For projects including vector mapping, coordinate with the Design Manager.

- Where tray systems are used over an existing conventional roof membrane, membrane protection is required.

- Water test(s) of waterproof membranes prior to installation of subsequent systems is required. Coordinate with the Design Manager.

Equipment Supports for Mechanical and Electrical Equipment and Panels. - Generally, steel support frames are preferred wherever practicable, since curbs tend to interfere with roof drainage. Coordinate the following roofing issues with mechanical engineers.

Steel Frames: Steel angle, channel or wide-flange shape frames with pipe column supports. Comply with the following requirements:

- Carry support legs down to solid structural framing (i.e. steel joists or beams, or concrete beams or deck, if analyzed and known to be structurally adequate). Do not place support legs on metal deck.
- Column supports to be round or square tubes only.
- Minimize the number of legs. For example, use 1 support centered on a gang of pipes instead of 2 wherever possible.

- Design supports for not less than 18 inches clearance above finished roofing surface. 24-inches is preferred clearance where possible and aesthetically permissible for smaller equipment units that can be reached just past center of unit from each side.
- Larger equipment shall be mounted 36”-48” above roof surface to allow for re-roofing and repair of equipment from underside.

Curb Type Supports: Construct curbs of pre-fabricated metal or site-built, preservative treated, lumber.

- For length or width dimensions greater than 48-inches, provide a saddle at the high side of the curb (against direction of slope-to-drain) to prevent water ponding behind curb.
- Generally limit the longest dimension of curb to 60 inches. Use steel support frames where a longer dimension is required.
- Do not use open-ended (two-sided) curbs. These curbs make re-roofing beneath equipment impossible.

Special Requirements - Re-roofing Projects.

Noise and Vibration - Attachment of underlayment, insulation, and other roofing materials may cause noise and vibration problems. This is especially true for applications over concrete roof structures where the structure may transmit noise throughout the building. Consult Design Manager to determine whether special requirements for evening or weekend work are necessary.

Dust Protection - Specify the provision of dust protection over occupant's equipment and furnishings where appropriate. For example, specify protection for top floor areas that are occupied (not penthouses) and that do not have suspended ceilings. Where occupant's activities may be particularly sensitive to dust, specify protection regardless of presence of suspended ceiling. Note that dust protection should be applied and removed in coordination with occupant's operations. Consult Design Manager.

Special Requirements - Construction Projects Impacting Existing Roofs.

Quality Assurance

- Standards: Require cutting and patching work in compliance with University Roofing Department and with recommendations of the National Roofing Contractors Association "Roofing and Waterproofing Manual".
- Installer qualifications: Require that cutting and patching of existing roof systems is completed by contractor licensed by manufacturer of existing roofing system.

Temporary Roof Protection

- Require protective measures for areas of existing roof used for construction access, work, or material storage. ¾" plywood tied together over 1 1/2" ISO insulation.
- Require filter fabric over roof drains.

DESIGN GUIDELINE 078413
FIRESTOPPING

Scope

For University of Michigan Hospitals and Health Centers projects refer to Design Guideline 078413-H.

Properly installed firestopping is critical to the successful fire performance of the building.

Specifications and details (where applicable) for firestopping should be included for both new construction and renovations, whether or not the renovation project involves new penetrations. Survey existing conditions for deficiencies in firestopping and unprotected wall openings, identifying both Code violations and other deficiencies. Present a summary to the Design Manager, who will determine the extent of remediation for each project.

Related Sections

U-M Design Guidelines:

Reference Documents:

Manual of Practice of the Firestop Contractors International Association (F.C.I.A.)

Design and Installation Requirements

Firestopping Design Standards

Include the Manual of Practice of the Firestop Contractors International Association (F.C.I.A.) in the "References" article of the specifications.

Firestopping Product Selection

Select products from recognized manufacturers which have been tested by one of the following agencies: Underwriters Laboratories (UL), or Intertek/Warnock-Hersey (WHI).

Include T and L ratings in addition to F ratings where applicable and/or where required by Code.

Floor Sleeves for Mechanical and Electrical Penetrations

Sleeves are highly recommended for floor penetrations to protect contents on the floor below the penetration from leakage or flooding caused by pipe breaks, sprinkler discharge, etc. In deciding where floor sleeves will be required, the Design Manager will evaluate the level of protection desired in the project and the likelihood of water damage.

Require coordination by the firestop contractor with mechanical and electrical trades so that the proper firestopping systems are selected.

Drawing Requirements

Design Professional to provide project specific details of each firestopping installation.

UL Design numbers shall be included on firestopping details

Inspection of Firestopping Installations

Normally, inspection of firestopping installations will be carried out by UM inspectors. If there are special circumstances, large project with multiple types of applications, which require an independent testing/inspection agency, direction will be given by the Design Manager . If a testing agency is employed, include reference to it in the specifications.

DESIGN GUIDELINE 079200
JOINT SEALANTS

Scope

Material and installation requirements for Joint Sealants.

VOC content of joint sealants.

Related Sections

U-M Master Specification Sections:
8.1 079200 – Joint Sealants

U-M Design Guideline Sections:
SID 4.2 Building Envelope

Reference Documents:
South Coast Air Quality Management District (SCAQMD) Rule 1168, Adhesive and Sealant Applications, amended January 7, 2005 with an effective date of July 1, 2005.

Design and Installation Requirements

General Design Requirements

For each joint, select products with a performance rating which matches the anticipated location, use and design movement of the joint. Detail joints with appropriate backing so that sealants will perform as designed.

To ensure proper adhesion in critical joints specify pre-construction adhesion testing by a certified independent laboratory. Specify primers when necessary to attain proper adhesion to the substrate.

For joint sealants within the weatherproofing envelope specify low-VOC products complying with SCAQMD Rule 1168.

- If the project is expected to encounter extreme temperature and/or humidity conditions, verify whether low-emitting sealants will meet the project's performance requirements. When an exception to the use of low-emitting sealants is proposed, describe in writing the reasons why low-emitting products will not perform adequately.

Provide a Joint Sealant Schedule which lists products for each type of joint, in addition to backing and primers, if required.

Provide details, minimum 3"= 1'-0" scale for each type of building envelope enclosure sealant joint and condition. Termination of vapor retarders and air barriers shall be included.

Fireproofing Joint Sealants

All joints in fire rated construction shall be detailed with a UL Design Number which matches the surrounding construction and the required rating.

DESIGN GUIDELINE 081113
HOLLOW METAL DOORS AND FRAMES

Scope

Scope: Hollow metal doors and frames, interior and exterior applications.

Related Sections

U-M Design Guideline Sections:
6.1 - 08 14 16 Flush Wood Doors
6.1 - 08 71 00 Door Hardware

U-M Master Specification Sections:
08 11 13 Hollow Metal Doors and Frames
08 14 16 Flush Wood Doors
08 71 00 Door Hardware

Design and Installation Requirements

Exterior Doors and Frames

- Exterior doors and frames, including anchors shall be galvanized: ASTM A653/ A653M, commercial quality, G90 coating designation.
- Frame min. 16 Gage
- Provide weep hole openings in bottom of exterior doors to permit moisture to escape. Seal joints in top edges of doors against water penetration.
- Exterior Doors: Provide doors fabricated with thermal-resistance vlue (R-Value) of not less than 4.0 deg D x h x sq.ft./Btu when tested according to ASTM C 1363.
- Exterior Doors & Frames: Referece ASHRAE Standard 90.1, 5.4.3.2. Doors and Frames labeled certified by the manufacturer. Product shall be tested by NFRC certified lab.
- Frames shall be fabricated with mitered or coped and welded face corners and seamless face joints.
- Fabricate frames as full profile welded.

Interior Frames

- Frames shall be fabricated with mitered or coped and welded face corners and seamless face joints.
- Frame min. 16 Gage
- Fabricate frames as face welded.

Doors

- Reference ANSI A250.8 and A250.4

- Heavy Duty, Model 2 (Seamless) min. 16 Gage face sheets
    - Exterior applicaton
    - Interior application, as needed based on use, potential abuse.
- Moderate Heavy Duty, Model 2 (Seamless), min. 18 Gage face sheets
    - Interior application

Door Frames metal thickness min. 16 gage.

Prepare doors and frames to receive mortised and concealed finish hardware, including cutouts, reinforcing, drilling and tapping.

Shop paint exposed surface of doors and frames units. Verify compatibility with manufacturer baked-on rust inhibitive primer.

Installation

- Apply bituminous coating to non fire rated frame interiors to receive grout fill.
- At masonry and concrete walls solidly fill space between frames and masonry/ concrete with grout.
- Metal stud partitions, solidly fill space between frames and metal stud with grout
- Consider installing a conduit for future card reader within grout filled frames.

DESIGN GUIDELINE 081416
FLUSH WOOD DOORS

Scope

For University of Michigan Hospitals and Health Centers projects refer to Design Guideline 08211-H.

In general, follow the guidelines below when specifying wood doors.

Related Sections

U-M Design Guideline Sections:

6.1 – 081113 - Hollow Metal Doors and Frames

6.1 – 088000 - Glazing

Design and Installation Requirements

Design Requirements for Flush Wood Doors

Design

Generally, aesthetic considerations are the prerogative of the architect. Consult with the Design Manager concerning visual effects which do not correspond to general design features stated in this guideline.

Quality Standards

Either AWI or WDMA I.S.1-A should be referenced as the quality standard in the specifications. Reference the latest edition of whichever standard is used.

Construction

In general, manufacturer's standard products are acceptable, provided they comply with the following requirements:

- The University's standard interior wood door is solid core, of flush construction, and Custom grade. Consult with Design Manager before specifying stile and rail doors or other construction grades.

- 5-ply cores shall be provided. Hot ply application for veneers are preferred. If cost considerations are paramount cold ply application will be acceptable. Lifetime warranty against delamination is required. Consult with Design Manager to determine appropriate quality level.
- Preference is for factory fitted doors.

Veneers

Do not specify exotic grades of wood with potentially long lead times and significant upcharges.

Glazing

For fire doors with lites, fire-rated safety glazing is required.

Wired glass is prohibited in door applicatons.

Factory glazing should always be specified for fire-rated openings and non-rated openings.

Finish

Specify factory finishing for transparent finishes. Factory finishing of adjacent wood frames is recommended to maintain a consistent appearance. Opaque finishes may be field painted but should be factory primed. Specify Medium Density Overlay in lieu of wood veneers for opaque finishes.

Fire Doors

Specify prefitting and premachining for fire doors.

Hardware

Factory machine doors for hardware that is not surface applied.

Warranty

Specify a warranty period lasting the life of the door for flush wood interior doors. Do not design doors which will void the warranty because of oversized cutouts or insufficiently sized stiles and rails.

DESIGN GUIDELINE 084113
ALUMINUM-FRAMED ENTRANCES AND STOREFRONTS

Scope

This section includes aluminum entrances and storefront. Aluminum windows installed in the storefront are covered in another section.

Use curtain wall framing instead of storefront for extensive exterior applications, particularly in areas where dimensions and configuration would require reinforcement. Typically, specify curtain wall for framing exceeding 12 feet in height.

Related Sections

U-M Design Guideline Section:
3.2 – Energy and Water Conservation
1.0 – Codes and Regulatory Agencies
6.1 - 084413 – Glazed Aluminum Curtain Walls
6.1 - 085113 – Aluminum Windows
6.1 - 087100 – Door Hardware
6.1 - 088000 – Glazing
8.2 - Architectural Preferred Manufacturer List

U-M Master Specification Sections:
084413 – Glazed Aluminum Curtain Walls
084113 – Aluminum-Framed Entrances and Storefronts
085113 – Aluminum Windows
088000 – Glazing

Reference Documents:
ASHRAE 90.1-2007, "Energy Standard for Buildings Except Low-Rise Residential Buildings"
AAMA/WDMA/CSA 101/I.S.2/A440-2008: NAFS – North American Fenestration Standard/Specification for Windows, Doors and Skylights
National Fenestration Rating Council (NFRC) Technical Documents

Design and Installation Requirements

Design Requirements for Aluminum Entrances

Single source responsibility - Specify that all of the storefront components, including the glazing, windows and doors, be assigned to a single contractor. In addition, the storefront, windows and doors should be provided by the same manufacturer.

Construction - In general, manufacturer's standard products (with the exception of hardware) are acceptable, provided they comply with the following requirements:

- Storefront System Construction: Thermally broken.
- Door Opening Frames: Applied stops only; blade stops are not acceptable.
- Doors: Medium stile (3-1/2 inch nominal) or wide stile (5 inches or more) doors. Medium stile is preferred. Do not specify thin or narrow stile doors. Comply with current barrier-free code for bottom rail height.

Glazing - Specify glazing per Design Guideline 08 8000 and as follows:

- Exterior storefront and doors exposed to weather: Insulating glass to match window or curtain wall systems.
- Interior storefront and doors: Single pane glazing, unless insulating glass required for acoustic properties.
- Minimum glass thickness for single panes or individual components of insulating glass used in door and storefront systems should be 1/4 inch.
- Specify factory-glazed doors where feasible.
- Carefully coordinate the selection of glazing to achieve appropriate U-value and Solar Heat Gain Coefficient (SHGC) of the assembly. Specify total assembly U-values, not center-of-glass. SID-D requires designers to investigate the payback for improved U-values and SHGC.

Finish - Typically match window or curtain wall system finish.

- For most new and replacement work, specify2-coat 70% polyvinylidene fluoride coating. Require 3-coat systems for organic coatings applied to doors.
- For anodized finishes, specify AAMA 611 Class 1 finish, clear or color anodized, as suited to project.

Hardware - Do not use door manufacturer's "standard" hardware for aluminum entrance doors. Comply with requirements of Guideline 087100 "Door Hardware" and Preferred Manufacturer's List.

Other Considerations

Pay careful attention to specifying and detailing connections to adjacent construction, moisture control and the potential for incorporating enhanced thermal performance. Regardless of Delegated Design requirements (see below) for the storefront, the A/E is responsible for the interface between the storefront and the surrounding building (adjacent jamb, head and sill conditions). Perimeter flashing, sealants and insulation, continuity of the air barrier, anchoring and clearances must be thoroughly detailed at head, sill and jamb conditions.

In buildings with higher than typical humidity, perform a thermal analysis of the storefront assembly to ensure that condensation will be avoided on both the frame and the glazing. For buildings with typical humidity criteria it should be adequate to specify a minimum Condensation Resistance Factor (CRF) that takes into account the anticipated interior conditions. Refer to Design Guideline Section 22 0500 for typical mechanical design requirements.

Delegated Design

UM recognizes that it is common practice to specify structural performance criteria for curtain walls and to delegate the actual design needed to meet these criteria to the curtain wall manufacturer. Indicate the design loads and the displacement on the drawings. The A/E should utilize the Delegated Design language in contained in AEC Masterspec Section 084113.

Testing

UM requires the storefront manufacturer to submit documentation of preconstruction testing showing that the designated system meets the performance criteria. If standard systems are being used the manufacturer is allowed to submit standard test reports for that system.

In-place field testing is also usually required for storefront installations. In special circumstances where the storefront is very limited in extent (especially if it is limited to entrance doors and framing), the requirement for in-place field testing may be waived by the Design Manager (DM). Obtain DM's approval in writing if field testing is to be waived. In most circumstances U-M will contract with a testing service for witnessing and validating testing, as well as for performing enhanced field inspections. The actual testing will normally be performed by the Contractor. In order to achieve testing of representative workmanship, samples for testing will be selected on a random basis by the A/E and the testing company (not the Contractor). At a minimum, field testing should be done twice; once fairly early in the installation process and again at the completion of the process.

Refer to language in AEC Masterspec Section 084113 ("Manufacturer Testing" in Part 1 and "Field Quality Control" in Part 3) for appropriate language regarding testing.

DESIGN GUIDELINE 084413
GLAZED ALUMINUM CURTAIN WALLS

Scope

This section includes exterior aluminum framing and glazing. Glazing materials and methods are specified in another section. Aluminum entrance doors and windows which may be installed in the curtain wall system are also covered in other sections.

Related Sections

U-M Design Guideline Section:
3.2 – Energy and Water Conservation
1.0 – Codes and Regulatory Agencies
6.1 - 085113 – Aluminum Windows
6.1 - 087100 – Finish Hardware
6.1 - 088000 – Glazing
6.2 - 220500 – Basic Mechanical Requirements

U-M Master Specification Sections:
084413 – Glazed Aluminum Curtain Walls
084113 – Aluminum-Framed Entrances and Storefronts
085113 – Aluminum Windows
088000 – Glazing

Reference Documents:
ASHRAE 90.1-2007, "Energy Standard for Buildings Except Low-Rise Residential Buildings"
AAMA CW-DG1 "Aluminum Curtain Wall Design Guide Manual"
National Fenestration Rating Council (NFRC) Technical Documents

Design and Installation Requirements

General

Use curtain wall for all significant window wall installations, including multi-story, vertical spans of greater than twelve feet and extended horizontal lengths.

Single source responsibility - Specify that all of the curtain wall components, including the glazing, windows and doors, be assigned to a single contractor. Further, the curtain wall, windows and doors should be provided by the same manufacturer.

Curtain Wall Requirements

The curtain wall design shall incorporate the following features:

- Pressure-equalized system for managing moisture.

- Compliance with the appropriate AAMA and NFRC standards (see "Reference Standards article in AEC Masterspec Section 08 4413)

Other Considerations

Pay careful attention to specifying and detailing connections to adjacent construction, moisture control and the potential for incorporating enhanced thermal performance. Regardless of Delegated Design requirements (see below) for the curtain wall system, the A/E is responsible for the interface between the curtain wall and the surrounding building (adjacent jamb, head and sill conditions). Perimeter flashing, sealants and insulation, continuity of the air barrier, anchoring and clearances must be thoroughly detailed at head, sill and jamb conditions.

Carefully coordinate the selection of glazing to achieve appropriate U-value and Solar Heat Gain Coefficient (SHGC) of the assembly. Specify total assembly U-values, not center-of-glass. DG 3.2 requires designers to investigate the payback for improved U-values and SHGC.

In buildings with higher than typical humidity, perform a thermal analysis of the curtain wall assembly to ensure that condensation will be avoided on both the frame and the glazing. For buildings with typical humidity criteria it should be adequate to specify a minimum Condensation Resistance Factor (CRF) that takes into account the anticipated interior conditions. Refer to Design Guideline section 220500 for typical mechanical design requirements.

Delegated Design

UM recognizes that it is common practice to specify structural performance criteria for curtain walls and to delegate the actual design needed to meet these criteria to the curtain wall manufacturer. Indicate the design loads and the displacement on the drawings. The A/E should utilize the Delegated Design language in contained in AEC Masterspec Section 084413.

Finishes

The preferred finish for most curtain wall work is 2-coat 70% polyvinylidene fluoride paint. For metallic finishes and on doors specify a 3-coat system.

Anodized finishes may also be acceptable for some projects; review with the Design Manager. For anodized finishes specify AAMA 611 Class 1 finish, clear or color anodized, as suited to project.

Testing

UM requires the curtain wall manufacturer to submit documentation of preconstruction testing showing that the designated curtain wall system meets the performance criteria. If standard systems are being used the manufacturer is allowed to submit standard test reports for that system.

In-place field testing is also required for curtain wall installations. U-M will contract with a testing service for witnessing and validating testing, as well as for performing enhanced field inspections. The actual testing will normally be performed by the Contractor. In order to achieve testing of representative workmanship, samples for testing will be selected on a random basis by the A/E and the testing company (not the Contractor). At a minimum, field testing should be done twice; once fairly early in the installation process and again at the completion of the process.

Refer to language in AEC Masterspec Section 084413 ("Manufacturer Testing" in Part 1 and "Field Quality Control" in Part 3) for appropriate language regarding testing.

DESIGN GUIDELINE 085113
ALUMINUM WINDOWS

Scope

Aluminum fixed and ventilating windows, including windows which are installed as part of a storefront or curtain wall system.

Related Sections

U-M Design Guideline Section:
3.2 – Energy and Water Conservation
6.1 - 084113 – Aluminum-Framed Entrances and Storefronts
6.1 - 084413 – Glazed Aluminum Curtain Walls
6.1 - 088000 – Glazing
8.2 - Architectural Preferred Manufacturer List

U-M Master Specification Sections:
084413 – Glazed Aluminum Curtain Walls
084113 – Aluminum-Framed Entrances and Storefronts
085113 – Aluminum Windows
088000 – Glazing

Reference Documents:
ASHRAE 90.1-2007, "Energy Standard for Buildings Except Low-Rise Residential Buildings"
AAMA/WDMA/CSA 101/I.S.2/A440-2008: NAFS – North American Fenestration Standard/Specification for Windows, Doors, and Skylights
National Fenestration Rating Council (NFRC) Technical Documents

Design and Installation Requirements

General

Follow the guidelines below when specifying aluminum architectural windows and related items. Unless otherwise indicated, these guidelines are not intended to restrict or replace professional judgment.

Design Requirements

Standards

Comply with AAMA/WDMA/CSA 101.I.S.2/A440-08 specifications.

- Minimum performance class: Specify AW performance class windows for both fixed and ventilating units.

- Minimum performance grade: As required by calculated wind speed for location and exposure category.

Single Source Responsibility

Specify that windows, glazing and sealants be the sole responsibility of a single prime contractor regardless of the location within the specification. In addition, the windows should all be the provided by the same manufacturer.

Tests

Require submittal of test reports of a qualified independent laboratory indicating compliance with requirements. Review requirements for in-place field testing with Design Manager. Specify Owner's field testing for installations of more than 10 units.

Engineering

- Indicate structural loads on drawings.
- Specify delegated design submittals, signed and sealed by an engineer registered in the State of Michigan.

Supplemental Performance Requirement

In addition to the requirements in DG3.2 and AAMA class AW, specify units tested to a minimum condensation resistance factor (CRF) based upon anticipated interior temperature and humidity conditions to ensure that there will be no condensation on the window surface.

Construction

Specify thermal-break construction without exception.

Glazing

Require glass surfaces to be located in the same plane, with a tolerance of 1/8 inch.

Carefully coordinate the selection of glazing to achieve appropriate U-value and Solar Heat Gain Coefficient (SHGC) of the assembly. Specify total assembly U-values, not center-of-glass. DG3.2 requires designers to investigate the payback for improved U-values and SHGC.

Refer to Design Guideline 088000 for further requirements.

Finish

Comply with the following:

- For partial renovations and replacement projects, match existing adjacent units to the greatest extent possible.

- For most new and entire building replacement work, specify a 70% polyvinylidene fluoride coating. See PML for acceptable manufacturers.
- Color: In general, specify non-metallic dark bronze. Coordinate other color selections with Design Manager.
- Specify two-coat application technique; or three-coat for applicable colors/metallics.
- Siliconized polyester and similar coatings are not acceptable.
- When an anodized finish is judged appropriate, specify AAMA 611 Class 1 finish, clear or color anodized, as suited to project.

Requirements for Ventilators

General:

- Specify ventilator units with full weather-stripping.
- Specify insect screens for Housing projects and food preparation areas only.

Office Installations: UM standard practice is to provide a minimum of one ventilating unit per office. Review project requirements with Design Manager.

Housing Installations: Specify 6" sash limiters on all residential windows. Coordinate with Design Manager.

Warranty

Require a 10-year warranty on all components of window system.

Other Considerations

Pay careful attention to specifying and detailing connections to adjacent construction, moisture control and the potential for incorporating enhanced thermal performance. Regardless of Delegated Design requirements (see below) for the windows, the A/E is responsible for the interface between the windows and the surrounding building (adjacent jamb, head and sill conditions). Perimeter flashing, sealants and insulation, continuity of the air barrier, anchoring and clearances must be thoroughly detailed at head, sill and jamb conditions.

In buildings with higher than typical humidity, perform a thermal analysis of the windows to ensure that condensation will be avoided on both the frame and the glazing. For buildings with typical humidity criteria it should be adequate to specify a minimum Condensation Resistance Factor (CRF) that takes into account the anticipated interior conditions. Refer to Design Guideline section 22 0500 for typical mechanical design requirements.

Delegated Design

UM recognizes that it is common practice to specify structural performance criteria for windows and to delegate the actual design needed to meet these criteria to the manufacturer. Indicate the design loads and the displacement on the drawings. The A/E should utilize the Delegated Design language in contained in AEC Masterspec Section 085113.

Testing

UM requires the storefront manufacturer to submit documentation of preconstruction testing showing that the designated system meets the performance criteria. If standard systems are being used the manufacturer is allowed to submit standard test reports for that system.

In-place field testing is also usually required for window installations. In special circumstances where the extent of window work is very limited, the requirement for in-place field testing may be waived by the Design Manager (DM). Obtain DM's approval in writing if field testing is to be waived. In most circumstances U-M will contract with a testing service for witnessing and validating testing, as well as for performing enhanced field inspections. The actual testing will normally be performed by the Contractor. In order to achieve testing of representative workmanship, samples for testing will be selected on a random basis by the A/E and the testing company (not the Contractor). At a minimum, field testing should be done twice; once fairly early in the installation process and again at the completion of the process.

Refer to language in AEC Masterspec Section 08 5113 ("Manufacturer Testing" in Part 1 and "Field Quality Control" in Part 3) for appropriate language regarding testing.

DESIGN GUIDELINE 087100
FINISH HARDWARE

Scope

Requirements for finish hardware on all doors, including aluminum entrance, fire rated doors, glass doors, and coordination with card readers.

For University of Michigan Hospitals and Health Centers projects refer to Design Guideline 08710-H.

Related Sections

U-M Design Guideline Sections:
1.0 Codes and Regulatory Agencies
3.2 Energy and Water Conservation
4.7 Building Access Control
084113 Aluminum Framed Entrances and Storefronts
8.2 Architectural Preferred Manufacturer List

UM Master Specifications:
Section 087100 Door Hardware
Section 281600 Security System General Requirements
Section 281300 Access Control & Monitoring System

Design Requirements

General:

- Do not use cash allowance provisions for hardware.
- Include a hardware schedule on drawings or in specifications. Note key side on door schedule.
- Egress:
  - Do not specify locks of any type on fire egress stair doors without approval from Design Manager.
  - Where required stairway door locks that restrict re-entry onto any floor without an exit discharge door will need a fail-safe electrically controlled lever that are connected to the fire panel.
  - Configure doors and select hardware to mitigate the risk of chaining doors together, thus preventing egress and emergency responder access. (e.g. same handing of

entrance door banks, flush mounted panic devices, etc…). Review approach with Design Manager.

- In areas of new construction, locate hardware in accordance with Door and Hardware Institute (DHI) "Recommended Locations for Architectural Hardware for Wood Flush Doors" and "Recommended Locations for Architectural Hardware for Standard Steel Doors and Frames." In renovated areas, obtain direction from Design Manager concerning whether to match existing hardware locations or whether to follow DHI recommendations for new construction.

- Trim Styles: Unless otherwise approved by the Design Manager, trim styles used in renovation work should match hardware currently in the building. Contact the Design Manager for information regarding existing hardware.

- Finishes: Unless otherwise approved by the Design Manager, comply with the following:

  - Specify standard uniform hardware finishes throughout the project. Obtain Design Manager approval for custom finishes.

  - For renovation work, match hardware finish of existing units.

  - For aluminum entrances, match the finish color of the door.

- Do not connect door hardware to fire alarm system unless required by code or UMHHC operating procedures.

- Where an interconnection with building fire alarm system is required, comply with the following:

  - Provide interposing interlocks using fire alarm system control modules. Program the control modules to change state only when the fire alarm system actuates.

  - Fire door hold-open devices and door operators: Provide normal (non-battery backed) power from fire alarm system. Upon a fire alarm system actuation or upon the loss of normal power to the fire alarm system, the door hold-open devices and door operators shall be de-energized. Held open doors shall close. Power operator doors shall operate by manual means only. Changes to operation described will also occur during a fire alarm 24 hour battery test. Review operational impacts with Design Manager.

  - Electrically operated access control door hardware: Provide power from access control system. When required, fire alarm system shall provide output relays or control modules to interrupt normal power to the door hold open devices upon a fire alarm system actuation. This means the status of door hardware devices shall remain unchanged during a fire alarm 24 hour battery test, but will change upon a fire alarm system actuation. The sequences of operation for door hardware devices upon fire alarm system actuation shall be defined in the design documents and executed by the

door access control system. Card access control system shall permit the card reader to function for access during a fire alarm condition. Card access control system shall have battery back up power for a minimum of 4 hours.

- Access Control: Provide operational narrative for all electrified door openings, include within hardware set in specifications.

Mechanical Hardware Requirements

Hinges:

- Interior doors (wood and hollow metal): 5 knuckle heavy duty ball bearing hinges with non-removable pins with set screw, not merely non-rising type with knurled pin. Specify steel base material unless there is an expected corrosive environment.

- Exterior doors (hollow metal): 5 knuckle heavy duty brass base metal or stainless steel ball bearing hinges with non-removable pins with set screw.

- Aluminum entrances: Heavy-duty continuous gear hinges.

- Do not specify pivot hinges.

  - Exception: pivot hinges are permitted for use on lead lined and interior all glass doors.

Closers:

- Specify surface mounted units only; concealed closers are not permitted (including aluminum entrance doors).

  - Exception: concealed closers are acceptable at interior all glass applications. Head closers are preferred.

- Door closers shall be cast iron body construction.

- Require closers to be mounted on least public room side of doors.

- Never specify hold-open function in conjunction with exterior building entrances and vestibules.

- Provide closers, adjustable to meet field conditions and barrier free requirements for opening force. Installation requirements shall require that closers be installed and adjusted to meet barrier free opening force requirements.

  - For doors that are part of the primary entrance and discharge, and are on an accessible path for which the closer force must exceed 5 pounds to allow positive latching,

consider the installation of a power assisted door operator in lieu of a pneumatic closer.

- All parallel arm closers shall be provided with manufacturer's heavy duty parallel arm bracket. Regular duty parallel arm brackets are not permitted.

- Doors that are part of the primary entrance and discharge, and are on an accessible, and are connected to the lobby, and for which the closer force must exceed 5 pounds to allow positive latching, then consider the installation of a power assisted door operator in lieu of a pneumatic closer.

	CLOSERS SCHEDULE			
Typical Usage	**Maximum Size Interior Door**	**Maximum Size Exterior Door**	**LCN Catalog Number**	**Sargent - Catalog Number**
Interior Doors: closer mounted on pull side of door.	Up to 54 inches	n/a	4011 REG	**281 O**
			4011 H (hold open)	**281 H**
Interior Doors: closer mounted on push side of door.	Up to 54 inches	n/a	4110 EDA	**281 P10**
			4110 H-EDA (hold open)	**281 PH10**
			41110 CUSH (stop arm)	**281 PS**
Exterior doors, or interior doors where the closer cannot be mounted on the door side of the frame. This closer mounts on the room side of the frame. It requires four inches or more clearance above the door opening.	Up to 54 Inches 60 inches	Up to 48 inches	4021 REG 4021 LONG	**281 OZ** **281 OZA**

Exterior doors, or interior doors where the closer cannot be mounted on the door side of the frame and the mounting space on the frame is less than four inches. Design the door header to avoid this closer when possible.	Up to 54 Inches	Up to 48 inches	4021 w/ 18G plate	**281 OZ w/ 281-B plate**
Exterior doors and interior doors where hold open is required.	Up to 54 inches	Up to 48 inches	4111 H-CUSH	**281 PSH**
			4111 SH-CUSH	**281 CPSH**
			4111 SCUSH	**281 CPS**

Pulls: Through-bolt all pulls. Do not specify offset pulls on doors unless needed to match existing.

Locksets:

- Specify lever handles on each new lockset. In locations of potential abuse, specify vandal resistant free wheeling lever trim. For locksets with thumbturn locking, specify ADA compliant thumbturns.

- Specify the following standard functions by space type:

    - Offices, laboratories, small conference rooms and other non-classrooms occupied spaces: Office lockset with thumb turn inside (ANSI F04). Specify thumb turn installation that provides vertical orientation for locked / horizontal for unlocked.

    - Classrooms: All classrooms should be lockable from inside the room and provide visual indication of door status on classroom side. Review required function with Design Manager.

        - Mortise lockset type M1 (When locked, door remains locked except by key outside or thumb turn inside): Schlage L9050 with indicator: 09-611 x XL12-431.

        - Mortise lockset type M2 (When locked, door reverts to unlocked when door is opened): Schlage L9056 with indicator: 09-611 x XL12-431.

    - Gender Inclusive restrooms: Privacy lockset with "Occupied" indicator and keyed override. Schlage L9496

- Service areas: Service/store lockset (ANSI F07)

- Provide knurled handle surfaces on doors to hazardous areas. Hazardous areas include mechanical rooms, elevator machine rooms, electrical closets and substation rooms, and stairways.

- Strikes: Specify curved-lip strikes; flat (reversible) strikes are not acceptable. Require extended lip strikes where required to protect door frame from being marred by latch bolt (frequently needed at wood door frames). Specify 7/8 inch lip to center strikes for pairs of doors with an overlapping metal astragal.

- Cores: Specify 7-pin small format interchangeable cores (SFIC). Refer to "Architectural Preferred Manufacturers List" for manufacturers. In limited renovations of existing buildings, match existing core type. Review with Design Manager.

- Construction Keying: For project security, provide a construction core as determined by the Design Manager. Always include construction cores for building entrance doors with cylinders.

- Keying: Include keying and master keying. Specify that keying and master keying will be coordinated with the University Key Office. Indicate keyed side on door schedule.

- Cylinder Housings: Furnish mortise and rim cylinder housings from the same manufacturer as the locksets to be furnished for each project.

Panic Hardware: Either cross bar or push pad type crash bars are acceptable, provided the type selected will meet the requirements of the application. Dogging, where provided, should be hex-key wrench type as opposed to key cylinder type. Exit devices with concealed vertical rods are not permitted in any application. In addition, comply with the following:

- Cross bar type panic devices are only permitted for use on non-electrified applications.

- Single doors: Select rim-type panic hardware; do not specify mortise units.

- Double doors with mullions: Provide rim-type, center latching devices. Preferred locking arrangement for maximum security and minimum maintenance.

- Double doors without mullions: Provide the following exit device types for each indicated application:

    - Aluminum Entrance Doors:

        - Applications without mullions are not permitted.

        - Medium or Wide Stile doors are encouraged. If narrow stile doors are preferred, verify compatibility with required hardware.

- Typically specify a pair of surface vertical rod devices. Omit bottom rods for interior locations without security requirements. Where bottom rod is required, specify ADA compliant rod and latch guard.

- For applications where the doors are required to be both latching and securable, doors with rim and mortise type panic device applications (requiring an active lever handle), provide an exterior-side cylinder that retracts the latch bolt (but will not unlock outside trim) in conjunction with an interior-side, separately keyed cylinder, mounted in the latch head, that will unlock the outside trim.

- Specify pulls in conjunction with panic hardware, except where levers are required for fire-rated devices, or are necessary to match adjacent trim. Do not specify lever handles on public entrance doors to buildings.

Coordinators: Review locking options for pairs of doors to determine if a coordinator is required. Locking configurations that do not require a coordinator are preferred.

Removable Mullions: On double doors, where a fixed mullion is not included, provide a removable mullion. Steel key operated mullions are preferred for durability and security. Aluminum mullions are also acceptable in aluminum entrance systems where preferred for aesthetics. Where provision of a mullion is not considered feasible, provide special exit device hardware indicated above.

Thresholds: Require that aluminum thresholds be cut-in, scribed, around mullions, frame members, and stops, not simply butted to them, to provide a continuous surface across the full width of the opening from jamb to jamb.

Stabilizers: Require stabilizer sets on all aluminum entrance doors and frames.

Door surface protection: Consider kickplates on push side of all doors with closers and armor plates on doors that are in the path of cart traffic. Coordinate the armor plate height with the user's specific cart requirements. Consider providing hardware protection/ shield on doors in the path of cart traffic.

Electrified Hardware Requirements (connected to campus central access control system):

- General:

  - Do not specify magnetic locks or delayed egress devices without prior approval of the Design Manager. For BFS buildings, special locking arrangements require separate submittal to the State.

  - Where feasible, request to exit (REX) switches that are integral in hardware devices in lieu of passive infrared REX devices

- Hardware types / components:

- Electric strikes: Only specify for doors that are equipped with barrier free operators where latching is required.

- Electric mortise lockset: Specify with built-in request to exit switches.

- Electric panic device: Specify with built-in request to exit switches.

    - At all exterior door applications and interior locations where latching is not required, specify devices with motorized electrical latch retraction in in lieu of devices that control the locking and unlocking of lever trim.

    - At interior and exterior applications with banks of doors that will be unlocked on a schedule via the access control system, furnish electrified devices for every door leaf in the bank.

    - Interior applications where latching is required, specify devices that control the locking and unlocking of lever trim.

- Specify devices that can be powered from lock power supply at access control panel assembly in lieu of local power supply.

- Electric power transfer (EPT): Provide heavy duty mortise type only. Electrified hinges and door cords are prohibited without prior approval of the Design Manager.

- Power Supplies: Specify power supplies for all electrified hardware to be furnished and installed by the security system integrator. Power supplies are to be located adjacent to the access control panel. DO NOT LOCATE POWER SUPPLIES AT THE DOOR.

- Door contacts: Specify 1" recessed door contacts where possible to be furnished and installed by the security system integrator. Coordinate with Div. 28 specifications. Generally, specify a door contact for every exterior door and every door equipped with a card reader. Specify at other locations as directed by the Design Manager.

All Glass Entry Systems

- All Glass Door systems are acceptable for select interior applications and prohibited in exterior entry applications

- Special attention is required for security applications, card readers and room schedulers. Review with security and operations Design Manager and Key office.

- Closers preferred location is at head of door.

Fully Integrated Door Systems – NOT Allowed

- Fully Integrated Door Systems are not acceptable for cross corridor and area separations.
- University of Michigan Key Shop does not support or repair Fully Integrated Doors Systems.

DESIGN GUIDELINE 088000
GLAZING

Scope

In general, follow the guidelines below when specifying glazing and related items. Unless otherwise indicated, these guidelines are not intended to restrict or replace professional judgment.

Related Sections

U-M Design Guideline Section:
3.2 – Energy and Water Conservation
6.0 DG 084113 – Aluminum-Framed Entrances and Storefronts
6.0 DG 084413 – Glazed Aluminum Curtain Walls
8.2 Architectural Preferred Manufacturer List

U-M Master Specification Sections:
MS088000 – Glazing
MS088010 – Glazing (Interior Applications)

Reference Documents:
IGCC/IGMA Certification for Insulating Glass Seals
GANA "Glazing Manual"
ASTM C 1036 Standard Specification for Flat Glass for Annealed Float Glass
ASTM C 1048 Standard Specification for Heat-Treated Flat Glass – Kind HS, Kind FT Coated and Uncoated Glass for Heat-Treated and Coated Glass
ASTM C1172-09 Standard Specification for Laminated Architectural Flat Glass
16 CFR 1201 Safety Standard for Architectural Glazing Materials for Glass in Hazardous Locations
ASTM E2190-08 Standard Specification for Insulating Glass Unit Performance and Evaluation
ASTM E1300-09a Standard Practice for Determining Load Resistance of Glass in Buildings
Insulating Glass Certification Counceil (IGCC)

Design and Installation Requirements

Design Requirements for Exterior Glazing

General

Specify 1-inch thick, low-e coated, argon gas filled insulating glass in all vertical vision glass panels. Where spandrel glass is used, do not specify units with insulation board adhered to inside surface. Where metal filler panels are used, specify 1-inch thick aluminum sandwich panels with rigid insulation core.

Provide insulating glass units (IG) certified by the Insulating Glass Certification Council (IGCC) and Insulating Glass Manufacturers Alliance (IGMA).

Determine whether heat strengthened glass is required due to the effects of differential shading, tinting/coating of glass, size of units, or other conditions. Typically restrict fully tempered glass to hazardous locations.

Design shall allow option for maximum of one treatment per glazing surface, ie. low e coating and frit on different surfaces.

Tint and Appearance

Most older University buildings, including those with recently retrofitted windows, have non-reflective, bronze tint outer panes paired with clear inner panes. The current standard is insulating units with clear outer and inner panes and solar control low-e coatings which are clear in color. The goal is to maximize visible light transmittance while minimizing solar heat gain. The use of other tints and reflective coatings is discouraged. Review aesthetic, performance and budget implications of glass selection with Design Manager.

In most retrofit projects in which current ceiling heights are lower than the window head heights, use a non-vision spandrel panel composed of a 1" insulating glass unit with an outboard lite matching the tint and coating of the outboard lites in the vision panels and an inboard light of non-tinted patterned glass. Determine whether the patterned inboard lites require heat strengthening, since patterned units tend to be weaker than clear float glass.

Where bronze tint glass is specified, include bronze anodized spacers unless "warm-edge" spacers are specified. Consider other color coated spacers where appropriate and available.

Require the glazing contractor to submit an adequate number of samples to display the color range of the glass. Because of difficulties with color variation in clear low E glazing, the following language, which is more rigorous than ASTM C 1036 and ASTM C 1376, should be included in the Quality Assurance article of the glazing specification if this type of glazing is included in the Project:

"Sealed Insulating Glass Units: In addition to other requirements in this Section, comply with ASTM D 2244- 09b Standard Practice for Calculation of Color Tolerances and Color Differences from Instrumentally Measured Color Coordinates. Obtain written acceptance by the Architect and the Owner's representative of permissible color tolerance between test specimen and reference and the procedure for calculating the color tolerance for each material and condition of use."

Thermal Performance

Vertical/Slope/Horizontal Glazing

Thermal performance characteristics for all exterior glazing types should be evaluated and selected based on the requirements of DG 3.2, including ECM's.

Since the Energy Code requires that U-value and SHGC maximums be determined for the entire fenestration assembly (not center-of-glass values), U-value and SHGC should ordinarily be specified in the accompanying Div. 8 aluminum framing sections ("Aluminum Storefront", "Glazed Aluminum Curtain Wall" and/or "Aluminum Windows") rather than in the "Glazing" section. Wherever possible, however, utilize very high performance glazing (maximum U-value of 0.3 and maximum SHGC of 0.33)

Other Performance Criteria

- Determine whether control of UV transmittance is required to minimize damage to furnishings, draperies and/or collections. Review with Design Manager.
- Determine whether controlling visual glare is a project requirement and if so, apply appropriate methods to achieve the desired performance.

Low-e Coating

For most vertical glazing apply low-e coating to the second surface of insulating glass units.

For sloped glazing applications apply low-e coating to the third surface of insulating glass units.

Fritted Glass

Use of fritted glass to improve performance and control glare, especially in skylights, sloped, and horizontal glazing, is acceptable

Fabrication and Installation

Specify pre-glazing wherever possible.

There is some evidence to suggest that wet-dry glazing systems tend to perform better over the long run than dry gasketed systems. However, not all manufacturers' products will support a wet-dry system. Verify glazing details with manufacturers. If sealants are to be used, specify pre-construction testing for sealant compatibility and adhesion.

The Drawings and Specifications should include details and requirements for each glazing condition.

Require insulating glass products to be sealed with dual seal method.

Fire Rated Glazing

Use the appropriately labeled fire-rated glazing in doors and windows requiring a fire rating.

Special Warranties

Require special project warranty on insulating glass of 10 years.

Require special project warranty on coated glass of 10 years.

Require special project warranty on laminated glass and dual glazed gel-filled fire-rated units of 5 years.

DESIGN GUIDELINE 092116
GYPSUM BOARD ASSEMBLIES

Scope

In general, follow the guidelines below when designing and specifying Gypsum Wallboard Assemblies and accessories.

Related Sections

U-M Design Guideline Section:

6.1 079200 Joint Sealants

6.1 099100 Low Emitting Paint and Coating Products

6.1 093000 Ceramic Tile and Waterproofing

7.2 Interior Finishes in Division 9

Application Review:

- Evaluate project application for materials cost vs. benefit.
  - Abuse resistant gypsum product is more expensive than standard gypsum board. If the standard gypsum is installed in 2 layers it is more expensive than a single layer of the abuse resistant gypsum.
  - Abuse resistant gypsum board shall be installed full height. The finish surface of abuse resistant is slightly different from standard drywall. This finish difference is noticeable in a finished partition.
  - Installing abuse resistant drywall full height, even above the ceiling, is beneficial versus having 2 different board types. It is more cost effective to install full height abuse resistant than to change to another material above the ceiling and risk the wrong product installed.

Design and Installation Requirements

Generally follow design practices outlined in manufacturer's literature and standard industry manuals.

Design non-loadbearing partitions in accordance with steel stud and drywall manufacturer's published recommendations regarding stud depth and gage for each application.

Incorporate steel or plywood sheet backing into gypsum board partitions where required to support equipment, panels, or furnishings, and as otherwise deemed necessary by the Design Manager.

Clearly mark fire-rated and smoke rated assemblies on drawings with either Underwriter' Laboratories or Gypsum Association design numbers, and with required fire rating in hours.

- Partitions shall be marked with UL designation above ceiling to prohibit unauthorized penetrations of mechanical items or conduits.

Design assemblies to provide sound control ratings established by the Project program or by the Design Manager.

Plastic trim is generally acceptable for interior applications, except specify metal trim at outside corners and other locations subject to impact damage.

Material Requirements

Gypsum General: Usually specify gypsum board for partition applications a minimum of 5/8-inch thick; and for suspended ceilings, soffits and fascias a minimum of 1/2-inch thick. Thinner units are acceptable where required for bending, compliance with UL or GA Design requirements, or other design requirements.

Abuse Resistant: Abuse Resistant materials are generally designed to withstand abrasion, which typically occurs when hard objects are dragged along or across a surface. Utilize Abuse Resistant gypsum board products in areas of expected high use and abuse. Material selection shall be evaluated based on type of abuse expected, penetration, indentation, scraping etc.

- Utilize in all high cart traffic corridors, residence floor areas and corridors.
    - Certainteed; Air Renew Extreme Abuse.
    - Georgia-Pacific Gypsum DensArmor Plus Abuse Resistant Interior Panel
    - Continental Building Products [Lafarge]; Protecta AR 100 Abuse Resistant Panels
    - National Gypsum Company; Hi-Abuse Brand XP Wallboard (XP= extra protection)
    - United States Gypsum Co.; Fiberrock Brand Abuse-Resistant Gypsum Panels.

Impact Resistance: Impact resistant materials are designed to withstand dents and punctures when directly struck with hard or heavy objects. Product resistant to surface indentation and penetration.

- Utilize in all public and common spaces, lab facilities and corridors.
    - Certainteed; "AirRenew Extreme Impact Gypsum Board"
    - Georgia-Pacific Gypsum; DensArmor Plus Impact Resistant Interior Panels.
    - Continental Building Products [Lafarge]; Protecta HIR 300 High Impact Resistant Panels.
    - National Gypsum Company' Hi-Impact Brand XP Wallboard
    - United States Gypsum Co.; Fiberrock VHI Brand Abuse-Resistant Gypsum Panels.

Glass Mat Faced: Utilize Glass Mat Faced in wet areas as wall tile backer (toilet or locker rooms with ceramic tile that do not include showers, no pool or sauna areas and not submerged in water). Product is not accepted as a finish product. Verify with each manufacturer if product can be utilized for tile backing.

- Design professional shall evaluate project specific application.
    - Certainteed; "Diamondback Tile Backer"
    - Georgia Pacific Gypsum Corp.; "Dens-Shield Tile Backer"
    - National Gypsum Company; "Gold Bond e2XP Tile Backer"
    - United States Gypsum Co.; "Fiberrock Auq-Tough Tile Backerboard"

Acoustical Gypsum Wall board: Provide gypsum wall board as part of an overall tested, certified system, including sealant, insulation and framing. Provide for specific program driven applications.

- National Gypsum Company; Soundbreak wallboard
- Certainteed; Silent FX
- Quiet Solutions; Quietrock 530

Cement Board: Utilize cement board for substrate in partitions for showers and toilet rooms directly adjacent to showers that are in high humidity areas to receive full height tile applications.

- Reference Ceramic Tile section for further information regarding cement board products, waterproofing and applications.

Flexible Gypsum Wallboard: Utilize at tight radiused applications.

- Georgia Pacific ToughRock FlexRoc Gypsum Board
- USG; Sheetrock Brand Flexible Gypsum Panels

Metal Stud Framing

Provide framing gauge as needed for partitions on a project specific basis.

- Provide studs with cut outs to accommodate conduit.
- Dimpled studs are acceptable provided they can accommodate deflection criteria established by design professional.

Metal Stud Framing Size Guidelines:

- Provide 3 5/8" minimum metal studs for interior office partitions and general spaces.
- Provide 4" minimum metal studs for interior partitions where there may be large conduit runs or as required by height requirements for partitions.
- Provide 6" minimum metal studs for interior partitions at locations with mechanical piping / plumbing located within the partitions.

DESIGN GUIDELINE 093000
CERAMIC TILE AND WATERPROOFING

Scope

Scope: Material selection, substrate selection, waterproofing choice, and installation.

Related Sections

U-M Design Guideline Technical Section:
6.1 Section 092116 Gypsum Board Assemblies

U-M Master Specification Sections:
7.2 Section 092116 Gypsum Board Assemblies
7.2 Section 093000 Tiling

Reference Documents:
TCNA "Tile Council of North America" for tile installation and guidelines.

Design and Installation Requirements

Material selection -

When selecting tile for installation consider the intended use, long-term installation, cleanability and application. Special attention is necessary in areas such as food service, toilet rooms, showers, and serveries. In areas with a presence of water or grease evaluate appropriate slip resistance factor.

Tile Substrate Application –

- Cementitious Backer Unit – Backing and underlayment material that can be installed in wet or dry locations. Suitable for floor, wall and ceiling applications. Cement board is recommended in high moisture (not submerged in water) areas to receive full height ceramic tile.
    - Typically installed in community toilet rooms, housing toilet rooms, and shower rooms. Cement board is more expensive and durable than gypsum based products. Although cement board is more costly than gypsum board products it provides a higher performance as a tile substrate.
- Coated Glass Mat Water-Resistant Gypsum Backer Board – Backing substrate for wet and dry applications. Suitable for floor, wall and ceiling applications.
- Fiber-Cement Underlayments – A dispersed fiber-reinforced cement backer and underlayment that can be installed in wet or dry areas. Suitable for floor, wall and ceiling applications.

- Fiber Reinforced Water Resistant Gypsum Backer Board/ Underlayment – Backer board/ underlayment conforming to ASTM C1278, can be installed in wet or dry areas. Suitable for floor, wall and ceiling applications.

Waterproof membranes- Membranes may be single or multi component liquid applied or a sheet membrane.

- ANSI A118.10 Compliant
- Liquid applied is preferred in areas with multiple corners and drains for increased coverage and ease of installation.
- Utilize under tile in toilet rooms, laundry rooms, dining facilities, shower rooms, any area that is near a water source that could flood or over flow. Install in areas that receive frequent mopping and cleaning.
- In shower areas and areas to be frequently power washed install waterproofing full height behind tile.

Crack Isolation membranes- Install crack isolation membranes in areas of existing slab on grade or concrete on metal deck. Utilize in areas with existing cracks in slabs. Refer to manufacturer recommendations for size of cracks that can be accommodated. Membrane isolates tile from in-plane substrate cracking.

- ANSI A118.12

Installation Requirements: Specify the Following

Water Testing – A water test is required to be performed at completion of waterproofing installation and again at completion of tile application. Drains shall be plugged and room flooded with minimum 2" of water for minimum 24 hours. If no leakage is evident from underside of slab or adjacent floor areas continue with next stage in construction. Note, water testing is required at every shower/ drain location.

Waterproofing installation at wall location – Waterproofing from floor application shall return up wall 6" and overlap wall waterproofing by minimum 4".

In all cases where spillage or flooding is possible, caulk around all new and existing through-floor pipe and sleeve penetrations. Coordinate sealing requirements with mechanical engineer.

Specification Format

In specifications include a tile installation schedule to include the type of installation, tile, grout mortar and specific information for each type of tile. One source documentation that

includes everything the contractor will need to bid, purchase and install each type of tile included within a project.

When specifying ceramic tile follow format below:

3.__ Interior Tile Installation Schedule

A. Type of installation (Interior Floor Installations, Concrete Subfloor, wall installation etc.):

1. (description: wall, floor, ceiling etc.) Tile Installation (insert TCNA # if applicable): Description

a. Tile Type: utilize same abbreviation as shown on finish schedule

b. Thin-Set Mortar: type of mortar

c. Grout: Type of Grout

d. Other specific information about tile install, i.e., pattern, membrane installation etc.

DESIGN GUIDELINE 095100
ACOUSTICAL CEILINGS

Scope

This section provides guidance for designing and specifying acoustical ceilings. Reference Design requirements below for oversized or specialty type panels.

For University of Michigan Hospitals and Health Centers projects refer to Design Guideline 095000-H: CEILINGS (09510-H).

Related Sections

U-M Master Specification Sections:
7.0 MS 220500 – Common Work Results for Mechanical

Design and Installation Requirements

Submittals

For buildings subject to the jurisdiction of the State of Michigan Bureau of Fire Services (Instructional Spaces and Dormitory Spaces), include requirement for Affidavits of Compliance.

Design Requirements

In general, exposed grid suspended ceilings are preferred over concealed systems. Avoid spline and other non-accessible systems when any mechanical systems or equipment will be concealed above ceiling.

There are currently no standardized product types for acoustic panels. However, the following general guidelines apply:

- 2 foot by 2 foot panels are preferred over 2 foot by 4 foot panels.
- Rabbeted edge panels are preferred except where economy is paramount.
- All cut edges of tile shall be painted to match exposed surface color.
- 3/4 inch thick panels are preferred over 5/8 inch panels.
- If the acoustical ceiling has multiple levels, provide metal trim transitions between levels by ceiling manufacturer. Vertical application of ceiling tile is not acceptable.
- Fiberglass panels are not acceptable.
- Where possible, specify humidity-tolerant acoustical panels carrying a minimum 10 year warranty.
- Specify gypsum board or other washable panels and moisture resistant grid in food service areas. Product shall be certified for intended use, ie. USFDA for food service.
- Oversized or large format ceiling tiles and panels are allowable with caution. Due to panel size most panels in an application end up with al least one item,

diffuser, sprinkler, light etc. anchoring them down. This creates a ceiling plane that is virtually unaccessible. Large format panels are also susceptible to sagging long term. A thoroughly designed system that accounts for long term rigidity and accessibility would be accepted. Large format panel applications shall be reviewed with Design Manager.

Where ceiling-mounted items obstruct the regular spacing of hanger wires, design "trapeze" structures with additional steel supports to bridge the obstruction.

DESIGN GUIDELINE 096229
CORK FLOORING

Scope

Applications and design considerations for cork flooring in University buildings.

References

South Coast Air Quality Management District (SCAQMD) Rule #1168, corresponding to an effective date of July 1, 2005 and rule amendment date of January 7, 2005.

Applications

Cork is comfortable, reduces noise, and can have sustainable properties. As a natural wood product, it is not suitable in all locations. Do not specify for locations with any of the following characteristics:

- Chemical exposure from occupant activities or cleaning requirements
- High sun exposure - cork will fade in direct sunlight
- Building entries with high foot traffic and salt / snow
- Potential for standing water
- Locations with high point loads

Design Requirements

Wear surface density: Minimum 30 lbs per cubic foot

Thickness: Engineered material of sufficient thickness to allow product to be sanded and refinished on a 3-5 year cycle. Expectation is floor can be sanded and refinished 2 or 3 times prior to replacement being required.

Finish: Specify the following:

- Raw cork for field finishing
- Multi-component high performance polyurethane coating - 3 coats minimum. Coating shall be recommended in writing by flooring manufacturer.
- Note that installer qualifications, substrate preparation, and dry times between coatings are critical for material performance.

Sustainability requirements

VOC content – Follow the requirements of SCAQMD Rule #1168 regarding VOC content of flooring adhesives and finishes.

DESIGN GUIDELINE 096500
RESILIENT FLOORING

Scope

Scope: Material selection, VOC content, installation, and cleaning of resilient flooring.

For University of Michigan Hospitals and Health Centers projects refer to Design Guideline 096500-H.

Related Sections

UM Master Specifications:
7.0 MS 096500 Resilient Flooring

Reference Documents:
South Coast Air Quality Management District (SCAQMD) Rule #1168, corresponding to an effective date of July 1, 2005 and rule amendment date of January 7, 2005.

Design and Installation Requirements

General - Given the wide variety of flooring materials and applications throughout the University, there are no widely applicable standards for flooring selection. Consult the Design Manager for specific types of flooring to be used.

Demolition - In the event that existing resilient flooring or adhesive contains asbestos, consult the Design Manager.

Laboratories - Several campus units require use of sheet vinyl floors with heat welded seams and integral, coved base to contain spills in laboratories. Consult the Design Manager for specific types of flooring and installation standards to be used.

VOC content – Follow the requirements of SCAQMD Rule #1168 regarding VOC content of flooring adhesives. Avoid the use of chemical welding for sheet vinyl seams unless necessary for project, since the products used for this purpose tend to have very high VOC content. For LEED projects, use products complying with the FloorScore standard unless there are special requirements which necessitate the use of a noncompliant product.

Installation - In all cases where spillage or flooding is possible, caulk around all new and existing through-floor pipe and sleeve penetrations. Coordinate sealing requirements with mechanical engineer. In general flooring shall be installed under casework.

Cleaning - Specify that the contractor clean floors of construction debris, dirt and grease as a requirement of Substantial Completion. The contractor must not wax new flooring; the University will clean, seal and wax floors as necessary after acceptance.

DESIGN GUIDELINE 099100
LOW EMITTING PAINT AND COATING PRODUCTS

Scope

VOC content of paints, coatings and wood finishes products.

Related Sections

U-M Master Specification Sections:
099100 – Painting

Reference Documents:
Green Seal Standard GS-11, Paints, 1st Edition, May 20, 1993
Green Seal Standard GC-03, Anti-Corrosive Paints, 2nd Edition, January 7, 1997
South Coast Air Quality Management District (SCAQMD) Rule 1113, Architectural Coatings, rules in effect on January 1, 2004

Design Requirements

Follow the guidelines below when selecting and specifying paint products. Use low-VOC products complying with the referenced standards except when circumstances conform to the stated exceptions.

- For interior paints comply with Green Seal Standard GS-11, Paints, 1st Edition, May 20, 1993.
- For anti-corrosive coatings comply with Green Seal Standard GC-03, Anti-Corrosive Paints, 2nd Edition, January 7, 1997.
- For wood coatings comply with SCAQMD Rule 1113 in effect on January 1, 2004.

White board, chalk board and idea paint types of finishes shall have clearly marked boundries to avoid damage to adjacent standard painted surfaces.

Design professional shall verify compatibility of primer and finish paint, coating etc.

Exceptions: Obtain the written permission of the Design Manager for all exceptions.

- Animal rooms.
- Areas subject to standing water or extremely high humidity.
- Exterior paints and coatings.

DESIGN GUIDELINE 101400
SIGNAGE

Scope

Designing and specifying signage and accessories.

For University of Michigan Hospitals and Health Centers projects refer to Design Guideline 101400-H Signage.

Related Sections

U-M Design Guideline Section:
2.4 Drawing and Construction Document Standards

Reference Documents:
Style Guide: Colors The Official University of Michigan Colors
Campus Wayfinding and Signage Guidelines
University of Michigan Emergency Preparedness

Design and Installation Requirements: Exterior Building Signage

New construction is to include appropriate exterior signage in the form of free-standing UM standard blue and white building ID signs. Consult Design Manager for required quantity, locations and additional information regarding ID signs. All major renovations will also include the upgrade or replacement of existing building ID signs, as the condition of the existing sign(s) warrants. The design, wording, placement, materials, and installation details of exterior signage must be approved by the University Planner's Office.

Consult the Design Manager for information regarding permanent signs on buildings. The Planner's Office will provide policies and guidelines regarding allowable signage on exterior walls, doors and windows of buildings and the design, wording, number, placement and materials of such signage.

Each University facility shall identify its accessible building entrances with the international symbol for accessibility. Additionally, signage is required at inaccessible entrances to direct users to an accessible entrance or to a location at which they can obtain information about accessible facilities.

Design and Installation Requirements: Interior Building Signage

General

Provide signage per code requirements and as noted here. If there is a conflict between these requirements and code requirements, code requirements supersede.

For renovation projects, consult Design Manager for information regarding existing room signs and extent, type, and supplier of new room signs. Usually, where one or only a few new signs will be installed, new signs should match existing signs. However, in areas where only a few signs will be installed, designers should evaluate the feasibility of replacing old, non-compliant signs with new signs in the visibly contiguous area.

For large construction projects (major renovations, additions, and new buildings) the materials and design of new signs are to be selected to be compatible with sign standards of the college or department which will manage the proposed facility.

Signage Characteristics and Room Identification

Permanent room numbers and permanent room types are to be indicated on room signs as both tactile and raised Braille characters. Indented characters shall not be used. Braille characters may be located within an incised area on the face of a sign. Locations that include a permanent room name are limited. Coordinate extent with Design Manager.

Where International Symbol of Accessibility is required, specify raised pictogram.

Restrooms, locker rooms, shower rooms, and other rooms that have both gender specific and gender inclusive facilities require specific room names, pictograms, and text that directs occupants to other facilities in the building. See appendix A for additional graphic information. Appendix drawings are not standard details to be used with editing nor do they show every possible permutation. Edit as applicable for project detail; however, do not use room names, pictograms, or additional text that is not expressly permitted in the appendix. If specific project requirements require changes to standard language or pictograms outlined in the appendix, review specific application and proposed changes with Design Manager.

Personal room and lactation room signs shall be titled “Personal Room” or “Lactation Room” without reference to gender. Provide pictogram as shown in appendix B.

Emergency Evacuation Maps

New construction and major renovation projects are required to include emergency evacuation maps as part of interior signage package. Consult Design Manager, who shall obtain standards from the Office of Emergency Preparedness.

Building Directories

New construction projects are encouraged to include building directories as part of interior signage package. Major renovation projects are also encouraged to upgrade existing and/or install new building directories. Consult Design Manager for guidelines and standards.

Room Number Assignments

Generally include room number signs for newly created or consolidated rooms and areas. In some cases, rooms to be remodeled and rooms within new additions cannot be assigned new

numbers without renumbering rooms outside the project area. In these cases, provisions for new signage outside the project area should be included in the construction project.

Room numbers are assigned by the University's Manager for Space and Facilities Information in Architecture Engineering and Construction (AEC). Only University designated room numbers are to be indicated on construction drawings. Consult Design Manager.

Laboratory Safety Signage

University standard laboratory safety signage is required at the entryway of each main research laboratory space where hazardous materials are stored and/or used. Additionally, signage is required at special use inner rooms where hazardous materials exist, including but not limited to: environmental, procedure, tissue culture, weighing, and pilot production. Safety signage is not required for dedicated waste storage/transfer rooms within large research buildings or animal holding/containment rooms which have a separate signage system developed specifically for the animal handlers. Review required locations with Design Manager.

Construction projects should include 8.5" x 11" clear acrylic holders (portrait orientation) outside of laboratories, typically located on the latch side of the door, below the room identification sign. Safety signage inserts will be provided by the academic unit, the facility management, or UM EHS.

Some existing laboratories have 10” square safety signage. Renovation projects are required to replace old safety signage within the renovated area and are encouraged to replace old signage in the visibly contiguous area. Review with Design Manager.

Appendices

Appendix A: Signage standards for specific room types

Appendix B: UM standard lactation room pictogram

APPENDIX A: SIGNAGE STANDARDS FOR SPECIFIC ROOM TYPES

SINGLE OCCUPANT
RESTROOM
BARRIER FREE
CHANGING STATION

SINGLE OCCUPANT
RESTROOM
NOT ACCESSIBLE
CHANGING STATION

GENERAL NOTES

1. REMOVE WORD "ACCESSIBLE" IF NEAREST IS NOT ACCESSIBLE.
2. REMOVE INT. SYMBOL OF ACCESSIBILITY IF FACILITY IS NOT ACCESSIBLE.
3. PICTOGRAMS ARE LOCATED IN QUANDRANTS. IF A PICTOGRAM IS NOT NEEDED, DO NOT REARRANGE REMANING PICTOGRAMS.
4. ROOM NAME OPTIONS FOR SINGLE OCCUPANT ROOMS:
   "RESTROOM" (SHOWN)
   "GENDER INCLUSIVE RESTROOM"

GENDER INCLUSIVE RESTROOM SIGN STANDARD GUIDELINES

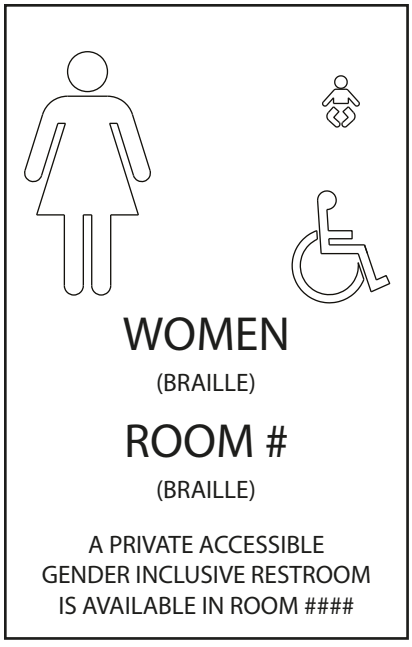

WOMEN'S RESTROOM
BARRIER FREE
CHANGING STATION

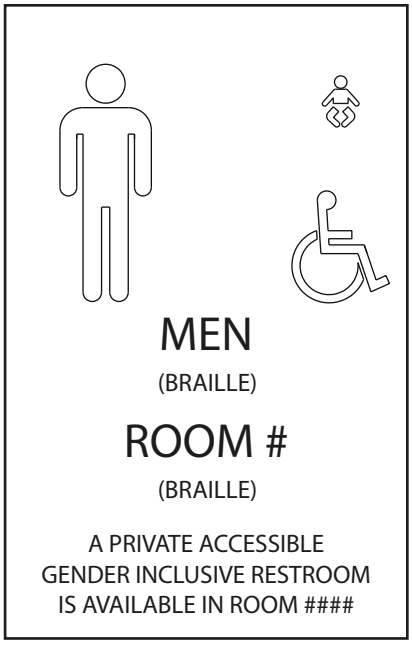

MEN'S RESTROOM
BARRIER FREE
CHANGING STATION

GENDER SPECIFIC RESTROOM SIGN STANDARD GUIDELINES

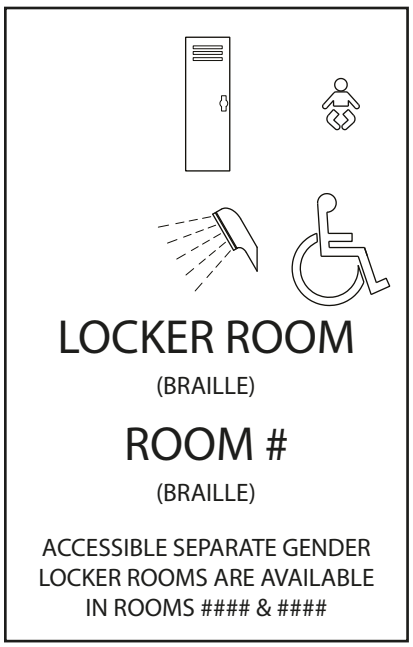

SINGLE OCCUPANT LOCKER ROOM
NO RESTROOM/SHOWER
BARRIER FREE
CHANGING STATION

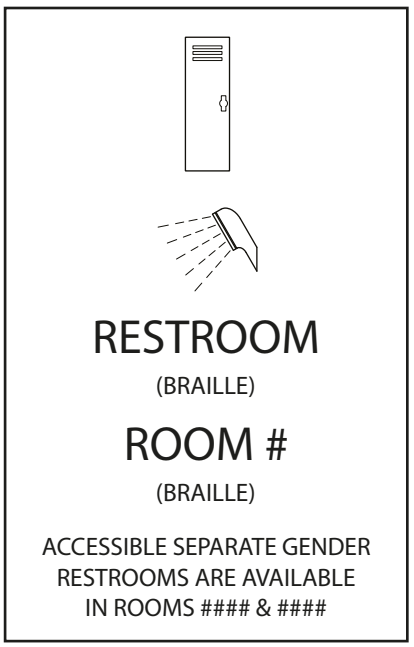

SINGLE OCCUPANT LOCKER ROOM
WITH RESTROOM/SHOWER
NOT ACCESSIBLE

GENERAL NOTES

1. REMOVE WORD "ACCESSIBLE" IF NEAREST IS NOT ACCESSIBLE.
2. REMOVE INT. SYMBOL OF ACCESSIBILITY IF FACILITY IS NOT ACCESSIBLE.
3. PICTOGRAMS ARE LOCATED IN QUANDRANTS. IF A PICTOGRAM IS NOT NEEDED, DO NOT REARRANGE REMANING PICTOGRAMS.
4. ROOM NAME OPTIONS FOR SINGLE OCCUPANT ROOMS:
   "_____ ROOM" (SHOWN)
   "GENDER INCLUSIVE ____ ROOM"

SINGLE OCCUPANT SHOWER ROOM
NO RESTROOM
NOT ACCESSIBLE

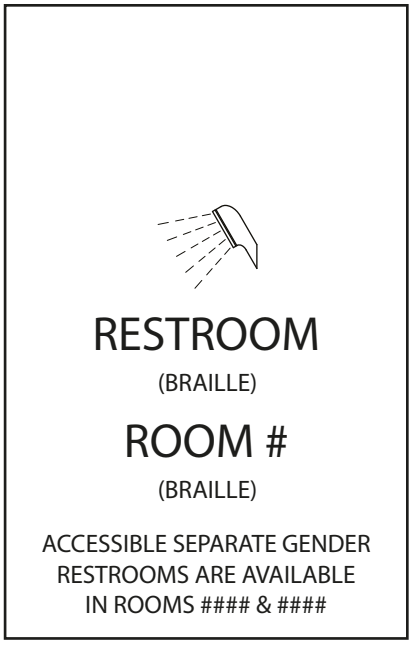

SINGLE OCCUPANT SHOWER ROOM
WITH RESTROOM
NOT ACCESSIBLE

GENDER INCLUSIVE ROOM SIGN STANDARD GUIDELINES

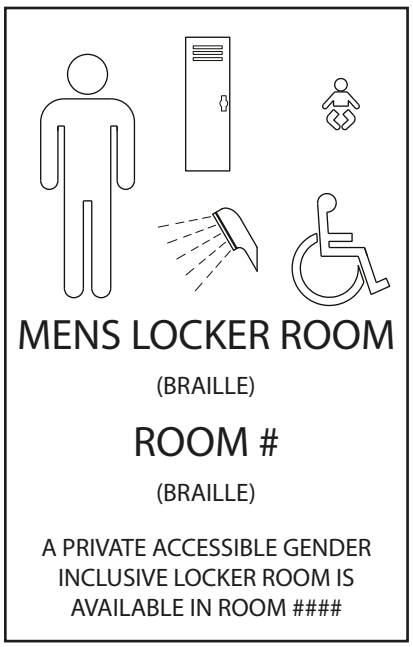

MEN'S LOCKER ROOM
NO RESTROOM/SHOWER
BARRIER FREE
CHANGING STATION

WOMEN'S LOCKER ROOM
WITH RESTROOM/SHOWER
NOT ACCESSIBLE

GENERAL NOTES

1. REMOVE WORD "ACCESSIBLE" IF NEAREST IS NOT ACCESSIBLE.
2. REMOVE INT. SYMBOL OF ACCESSIBILITY IF FACILITY IS NOT ACCESSIBLE.
3. PICTOGRAMS ARE LOCATED IN QUANDRANTS. IF A PICTOGRAM IS NOT NEEDED, DO NOT REARRANGE REMANING PICTOGRAMS.
4. LOCKER ROOM NAMES OFTEN INCLUDE SPORT NAME. REVIEW WITH DESIGN MANAGER.

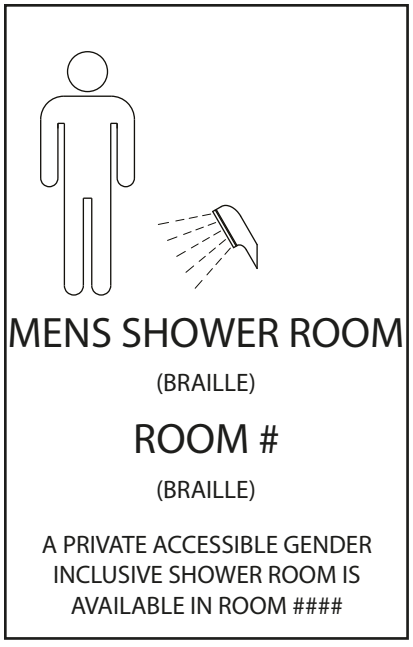

MEN'S SHOWER ROOM
NO RESTROOM
NOT ACCESSIBLE

WOMEN'S SHOWER ROOM
WITH RESTROOM
NOT ACCESSIBLE

GENDER SPECIFIC ROOM SIGN STANDARD GUIDELINES

APPENDIX B: UM STANDARD LACTATION ROOM PICTOGRAPH

DESIGN GUIDELINE 102113
TOILET COMPARTMENTS

Scope

Designing and specifying toilet compartments.

Related Sections

U-M Design Guideline Section:
6.0 DG102800 Toilet Accessories
8.0 Preferred Manufacturers List

Design and Installation Requirements

Generally, ceiling hung partitions are preferred for ease of cleaning. Coordinate ceiling hung units with supplemental structural steel support work. Steel support shall be designed by a structural engineer to resist rotational forces as well as weight concerns. Unbraced channels are not sufficient to stabilize panels.

Ceiling hung partitions are not recommended for ceiling heights in excess of 8'-0". Where ceiling suspended units are not feasible, provide floor supported units with headrail bracing at door openings. Wall and floor cantilevered units are generally not as stable and should be avoided.

Urinal screens shall be wall mounted to provide visual privacyand allow for ease of cleaning of floor below. Floor mounted option shall be reviewed with Design Manager.

Material Selection:

Provide Class A or Class B fire rated materials. Design Professional shall determine compliance of material required based on occupancy and use. Note Class A material is substantially higher cost and should only be specified if required by code. Otherwise provide Class B materials for cost saving and larger selection of product available.

Panel thickness shall be industry standard for material chosen.

- Painted Metal Panel: Constructed of galvannealed steel with a high-grade synthetic enamel or powder coated finish.
    - Economical partition material.

- HDPE (High Density Polyethylene): Constructed from 1" thick high density polyethylene with homogenous color.
    - Preferred for housing and campus building projects
    - Mid-range partition material.
- Phenolic: Constructed of a solid phenolic core with a high-pressure decorative matte surface finish as an integral part of the core material.

    - Mid-range partition material.
- Stainless Steel: Constructed of minimum 20 gauge panels.
    - Premium partition material.

Hardware and Accessories:

- Provide stainless steel hardware with tamper resistant fasteners.
- Hinges: Either surface-mounted or cutout inset type, adjustable to hold door open at any angles up to 90 degrees.
- Latch and Keeper: Provide slide latch unit, with provision for emergency access.
- Barrier Free Latch and Keeper: At each out swinging partition door, in addition to standard hinges, coat hook and other specified hardware, provide manufacturer's standard ADA-compliant latch and keeper. In addition, provide the following:
    - Handles: Provide manufacturer's standard ADA-compliant pull handles on both the interior and exterior sides of partition doors.
    - Barrier-Free Latch and Keeper shall allow user to close and secure the door with a single motion of one hand.
- Coat Hook and Bumper: Mfr's standard unit, rubber tipped.
- Purse Shelf: Stainless steel pull down purse shelves are desirable in women's toilet compartments.
- Door Pulls: Mfr's standard, exterior of standard stall doors and both sides of barrier free stall doors.
- Brackets and fittings shall be stainless steel.

DESIGN GUIDELINE 102800
TOILET ACCESSORIES

Scope

Designing and specifying toilet Accessories.

For University of Michigan Hospitals and Health Centers projects refer to Design Guideline 10810-H available at:

http://www.med.umich.edu/facilities/plan/dg/06/doc/a/102800H.pdf

Related Sections

U-M Design Guideline Section:
6.0 DG 102113 – Toilet Compartments
5.10 Gender Inclusive Toilet/ Lockerroom

Product and Installation Requirements

Provide hand towel dispensers unless hand dryers requested instead by Design Manager.

Hand Towel Dispenser

The University provides hand towel dispensers for installation by the Contractor. The standard unit which is provided is a plastic body accommodating towel rolls. Units should be provided in sufficient quantity for the number of lavatories, but not less than 1 unit for each 3 lavatories. The Project Manager will arrange for delivery of the units to the job site in coordination with the Contractor.
Note: Units are 10" or greater in depth. Units shall be placed as required by code. Minimum of 1 unit per toilet room shall be placed to meet current ADA requirements.

- Roll Towel Dispenser Kimberly-Clark 09736
- Touch Free Dispenser Kimberly-Clark 09990 (not ADA compliant)
- Verify Specific Paper Dispenser with Design Manager.

Waste Receptacle

Avoid recessed or surface mounted stainless steel receptacles. Provide space for free-standing painted metal receptacles with vinyl bumper edge.

- Provide space for the waste receptacle near lavatories and adjacent to exit door. Locate outside of door operation clearances required by code.
- Waste receptacle is 23 gallon, 20"Long x11"Wide x30"High durable plastic.

Feminine Napkin/Tampon Dispensers

If requested by department, specify stainless steel units dispensing both products. Recessed, semi-recessed or surface mounted types are acceptable. Units to be with 25 cent coin operation. Note that dispensers are not filled and maintained by Building Services department. Review operational impact with department.

- Note a recessed model shall require a deeper partition stud depth.
- Mount so all operational and dispensing components are within required ADA reach range.

Liquid Soap Dispensers

Typically the University provides soap dispensers for installation by contractor. The standard unit which is provided is a plastic body unit with adhesive attachment. Position on wall adjacent to sink.

- If two lavatories are installed a single soap dispenser may be installed between the lavatories.
- Locate dispenser to be ADA compliant at ADA sink location.
- Verify specific soap dispenser with Design Manager.
- Soap Dispensor
    - Spartan #9756 White

Toilet Tissue Dispensers

The University provides toilet paper dispensers for installation by the Contractor. The standard unit which is provided is a plastic body unit for "jumbo" rolls. The University's Project Managaer will arrange for delivery of the units to the job site in coordination with the Contractor.

- Architect of record responsible for placement of toilet tissue dispensers within ADA reach range. Preferred mounting location, above grab bar.
- Verify Specific Paper Dispenser with Design Manager.
- Toilet tissue Dispenser Units – Kimberly Clark
    - 09551 for cored tissue – preferred style of paper
    - 09608 for coreless tissue

Feminine Napkin Disposal Units

Specify stainless steel units. Surface mounted units are acceptable; through-partition units are preferred. Unit shall be mounted in compliance with ADA guidelines.

- Exception in housing facilities. Due to population swing from year to year community toilet rooms servicing dormitory residents shall have free standing feminine napkin disposal units.

Grab Bars

- Concealed mounting anchors are desirable.

- Stainless steel 18 gauge minimum
- Provide non-slip texture.
- Outside Diameter 1 ½".

Pull Down Shelves

Stainless steel pull down purse shelves are desirable in women's toilet compartments.

- Verify with users if shelves are preferred.

General Room Shelves

Provide at least one stainless steel shelf in each toilet room if no other provision has been made for setting down possessions.

- Verify with users if shelves are preferred.

Childcare Accessories

During the programming phase, determine whether diaper-changing stations are to be provided in toilet rooms and in which toilet rooms they are to be located. Regardless of whether changing stations are required for the project, in new construction and in renovations affecting toilet rooms, provide space for mounting a diaper-changing station in each toilet room, men's. women's and gender neutral. Reinforce the wall area at the changing station location adequately to support the changing station. Note proposed location of plans. Changing stations shall be fold-down type supporting a minimum of 250 lbs. of static load when opened and shall project no farther than 4" from the wall when closed.

Shower Accessories

Individual shower compartments shall be provided with the following list of accessories:

- Stainless Steel curtain rods
- Soap Dish, Assess need with end user and confirm with Design Manager.
- Provide fold up ADA compliant bench per grouping of showers, as required by code.
- Preference is to provide a separate private dressing area directly adjacent to shower.
    - Provide minimum 2 robe hooks in dressing area.
    - Provide a built in seat in dressing area.

DESIGN GUIDELINE 104400
FIRE EXTINGUISHERS

Scope

In general, follow the guidelines below when specifying fire extinguishers and fire extinguisher cabinets.

Related Sections

U-M Design Guideline Sections:
5.7 SBA Unit Substation Rooms
6.1 DG140000 Conveying Systems – General Requirements
6.2 DG210000 Fire Protection

Requirements of Regulatory Agencies

Perform all work in accordance with applicable codes, the State of Michigan Building Code, MIOSHA General Industry Safety Standards (Part8, Portable Fire Extinguishers), the NFPA 101 Life Safety Code (where applicable), and NFPA 10 Standard for Portable Fire Extinguishers.

University of Michigan does not accept code exceptions for fire extinguisher installation. Fire extinguishers shall be installed throughout all University buildings. Any deviations from this direction shall be reviewed and approved by OSEH, University Fire Safety Services.

Extinguisher mounting height to conform to the American with Disabilities Act (ADA) Guidelines and State of Michigan Barrier Free Requirements.

General Design Requirements Fire Extinguishers

Types of fire extinguishers:

1. ABC multipurpose dry chemical
    a. Provide UL-listed 4-A; 60-BC, 10-lb. nominal capacity, in enameled steel container.
2. BC carbon dioxide
    a. Provide UL-listed 10-BC, 10-lb. nominal capacity, enameled metal container.
3. "Class K" wet chemical
    a. Provide UL-listed, 6 or 9 liter capacity, stainless steel container, with wall-mounted instructional placard.
4. "Class D" dry powder
    a. Provide FM-approved, in enameled steel container, appropriately sized for the hazard being protected.

Other types of extinguishers (water under pressure, halon agent, aqueous film forming foam, wheeled extinguishers) may be appropriate for specific hazards that are not typically found on

campus, but that could be associated with a particular project (such as electrical power generating stations, heliports, indoor solid-fuel cooking appliances, etc.) The UM Design Manager and University Fire Marshal should be consulted regarding proper extinguisher selection for unusual applications.

Design professional to determine, the appropriate applicable location for each extinguisher based on applicable codes and standards.

Specify units with the following characteristics:

Metal bodies, valve assemblies, discharge levers and carrying handles. Plastic or composite materials are not acceptable in these applications.

Rubber hoses.

Fully rechargeable.

UL-listed, bearing UL "Listing Mark" for extinguisher type, rating, and classification.

Design Requirements Fire Extinguishers Cabinets and Mounting Brackets

Fire Extinguisher Cabinets can be fully recessed, semi recessed or surface mounted depending on location and code requirements.

- Size: To suit type of unit being housed, but not less than 12 inches by 27 inches by 8 inches tub interior.
- Door and Frame Finish: Satin Stainless Steel
- Window: Approx. 2 inches by 24 inches, ¼ inch clear acrylic.
- Signage: Identify extinguisher cabinets with manufacturer's standard red lettering applied to cabinet door, spelling "FIRE EXTINGUISHER". Letter size, style and location selected by Design Professional.
- Locking fire extinguisher cabinets should not be used. If locking cabinets are desired based on an identified theft or vandalism concern, the UM Design Manager and University Fire Marshal should be consulted.

Mounting Brackets: Provide units designed to hold specified extinguishers. Mount brackets with expansion anchors to withstand a 200 pound load applied in any direction.

Signage: Identify bracket-mounted extinguishers with red letter decals with clear backgrounds, spelling "FIRE EXTINGUISHER" applied to wall surface or with three-dimensional projecting signs attached to the wall surface. Identify column-mounted extinguishers with red letter decals with white backgrounds, spelling "FIRE EXTINGUISHER" applied to the other column surface. Letter size, style and location selected by design professional.

Application

In addition to providing units in accordance with code requirements, provide a 4A:60BC, 10 pound (nominal) capacity unit in each individual laboratory. Mount units next to laboratory exit doors, in full view.

End of U-M DG 104400

DESIGN GUIDELINE 115313
LABORATORY FUMEHOODS, BSC'S, SPECIALTY HOODS AND ACID FLAMMABLE CABINETS

Scope

Laboratory chemical fume hoods, biological safety cabinets (BSC), HEPA filtered laminar flow clean benches, hybrid hoods, acid and solvent chemical storage cabinets.

Related Sections

U-M Design Guideline Section:
6.0 DG123553 – Laboratory Casework
6.0 DG221113 – Piping Materials and Methods
6.0 DG230920 – Lab Terminal Air Flow Units and Controls

U-M Master Specification Sections:
MS115313 – Laboratory Fume Hoods, BSC's, Specialty Hoods and Acid Flammable Cabinets
MS123553 – Laboratory Casework
MS230920 – Lab Terminal Air Flow Units and Controls

Design and Installation Requirements

General

Incorporate the requirements of this section taken together with the requirements of Design Guideline 230920, Lab Terminal Air Flow Units and Controls.

Use U-M Master Specification Section 11 5313 Laboratory Fume Hoods, BSC's, Specialty Hoods and Acid Flammable Cabinets as the basis for chemical fume hood specification on all U-M projects. Specification defines fume hood types in terms of face velocity characteristics. Use these definitions when specifying fume hoods and designing fume hood exhaust systems at U-M. Specification has been customized to include many of the Design Guideline requirements. For ease of identification, requirements identified in this document by gray highlighting are already incorporated in the specification. Note that the specification does not include BSCs or any specialty hoods (e.g. perchloric acid, hybrid hoods, etc.).

Edit U-M Master Specification Section 115313 to make it project specific. Extensive editor's notes are included in the specification to assist the A/E. Be sure to turn on hidden text and read those notes.

Fume Hood Design Requirements

Selection and Design

Selection:

- Select hoods in close consultation with the Project Mechanical Engineer, Design Manager and the University's Department of Occupational Safety and Environmental Health (U-M OSEH).
- Complete thorough programming effort with hood users and OSEH to determine the types of work being conducted in the fume hood, the experience of the users, the materials which will be used in the hoods, and any special requirements for the hoods.
- Consider impact on mechanical requirements.
- Select hood size and type to conserve energy. Specify the narrowest width which properly accommodates user needs. When selecting a hood type evaluate hood air volume usage in conjunction with required lab air change rates.
- Evaluate hood density. Densities above three hoods per 5000 net square feet of lab shall be justified. Consider alternatives such as snorkels and chemical storage cabinets.

Performance: Comply with the requirements of ASHRAE Standard 110-95 As Manufactured, and relevant portions of NFPA 45. U-M Master Specification Section 115313 describes the specific ASHRAE 110 performance criteria required for fume hoods used at U-M.

Location: Follow the general recommendations in the National Institutes of Health publication *Methodology for Optimization of Laboratory Hood Containment.* In addition:

- Locate hoods away from excessive traffic, cross drafts and air turbulence from windows, doors, or diffusers.
- Locate hoods such that fire, explosion or toxic material escaping the hood would not cross the immediate path of room egress.
- Perform computational fluid dynamics analysis when hood proximity or density may affect the successful operation of the hoods.

Types

Hood Types: Clearly delineate the hood types required for the project, either in the hood specification or on the drawings (preferred).

- Constant Volume: Partial bypass type are appropriate in most circumstances. Full bypass type are high energy users but may be appropriate in certain applications with U-M OSEH approval.

- Variable Air Volume (VAV) Hoods: Specify VAV hoods if energy analysis proves energy savings. Always specify VAV hoods for combination sashes. For all applications utilizing VAV hoods, specify the corresponding VAV type lab terminal air flow unit control.
- Reduced Face Velocity Hoods: RFV hoods, as defined at U-M, are those that U-M has approved to operate at a reduced average face velocity, currently 70 FPM. They are used to save energy while providing equivalent capture to a conventional hood. The following also applies to RFV hoods:

  - Do not vary from the approved list of manufacturers or models.
  - Do not modify the RFV hood performance criteria.
  - Maximum hood width: 6' nominal.
  - Maximum over-all hood depth: not to exceed 36".
  - Minimum ceiling height in room: 8.5'
  - Use only "bench-top" style hoods, not floor model, perchloric acid, or radioisotope hoods.
  - Balance to provide 70 FPM average face velocity and alarm at 60 FPM face velocity. Clearly indicate air balance information in the mechanical documents.

- Bench-top hood: Designed to rest atop a counter or base cabinet, usually about 36" above the finished floor. Consider accessibility requirements when specifying height and configuration.
- Floor model hood: Used where taller apparatus is required or equipment is to be rolled into the hood. Floor model hoods shall provide a minimum of 78" of working height.
- Radioisotope (RI) hood: Most low-level radioisotope work can be carried out in standard fume hoods. Therefore, if radioisotopes are to be used, consult with U-M OSEH to determine which type of hood to specify.

Sash Type

Clearly delineate the hood sash type for each fume hood, either in the hood specification or on the drawings (preferred).

- Vertical rising sash: Appropriate in most circumstances.
- Combination sash: Specify when justified by the type of hood use. Constant volume hoods of any type are not safe with combination sash arrangements because correct face velocity can't be assured as the horizontal sash is adjusted. Always specify with restricted bypass VAV hoods.

Sash Stops

Specify all fume hoods with integral sash stops. Add-on stops are not acceptable.

Height for sash stops: 14" from the work surface, with a minimum clear opening height of 12" above the airfoil. For airfoils of unconventional design, adjust the location of the sash stop to maintain the 12" clear opening height.

Equip all hoods with sash alarms.

Work Surfaces

Solid Cast Epoxy Resin: Typically specify solid cast epoxy resin tops.

Stainless Steel: Specify for specialty applications only, typically RI and perchloric acid hoods.

Linings

Specify linings to meet requirements of NFPA 45, paragraph 9-1.1 (flame spread less than 25). The following are possible choices:

- Fiberglass-Reinforced Polyester Resin Panels (FRP): Typically specify FRP. Note that FRP has limited chemical and heat resistance. Stainless Steel: Provides higher heat resistance than FRP but decreased chemical resistance. Specify only in RI hoods, perchloric acid hoods and when high heat resistance is required.
- Others: Other materials are available from some manufacturers, providing increased chemical resistance. Due to minimal thickness required by application, verify that alternate materials are properly reinforced against breakage during transport and use. Review material advantages and cost/benefit ratio compared with the typical choices listed above.

Baffles

- Fixed baffles: Specify for fume hoods in teaching labs or other locations where users may be unfamiliar with fume hood operation.
- Adjustable baffles: Typically specify for research laboratories.

Controls and Alarms

Chemical fume hood controls and alarms are specified in U-M Master Specification 23 0920 Laboratory Terminal Air Flow Units and Controls. Chemical fume hood controls, including low exhaust flow and sash alarms, are to be provided and installed by the laboratory air flow controls contractor under section 230920, not the fume hood manufacturer. The fume hood manufacturer provides cut-outs for the low exhaust air flow alarm and makes provisions to allow mounting of sash sensors, sash alarm, and other devices provided by the laboratory air flow controls contractor.

Mechanical Service Fittings

Mechanical service fittings for non-specialty fluids and gases (domestic water, compressed air, natural gas, etc.) used in chemical fume hoods are specified in U-M Master Specification Section 115313 Laboratory Fume Hoods, BSC's, Specialty Hoods and Acid Flammable Cabinets. Specify factory piped units whenever possible. Piping within the fume hood shall match materials in Division 22 Mechanical Specifications.

If RO or DI water service fixtures are required, edit 115313 to include a specification for these fixtures. Specify plastic materials (PP, PVDF, etc.) and a fixture design (dead-end or re-circulating) compatible with the purity requirements of the distribution system supplying the fixture.

If other specialty fluids or gases are required (e.g. medical gases), specify compatible fixtures and fabrication techniques. The related Division 22 mechanical specification should always be referenced in such cases.

Cupsinks may be either side-mounted or mounted in the work surface (with a raised rim), depending on user needs. Coordinate location of sinks mounted in the work surface with raised rims around the perimeter of the work surface.

Electrical

Specify ground fault circuit interrupter receptacles in fume hoods and within 6 feet of fume hoods which contain sinks.

. These separate circuits must be indicated on the electrical drawings.

Additional Superstructure Components

Consider the following components where appropriate:

- . However, rooms without suspended ceilings rarely benefit from enclosure panels.
- Floor Model Hoods: Specify either a stainless steel or epoxy resin floor constructed so as to retain spills, but tapered to facilitate ease of move-in for roll-in items.

Base Unit Design Requirements

Coordinate the specification of base cabinets with fume hoods for size, depth and finish match. Specify products from a single distributer to facilitate construction coordination.

Typically specify both a flammable/solvent and a corrosives storage base cabinet, each equal to half the length of the hood. Where standard cabinet lengths make this impossible, or where special storage requirements dictate additional storage capacity, locate supplemental storage units elsewhere in the laboratory. Do not locate supplemental flammable/solvent storage cabinets next to the hood superstructure. Specify either wood or metal:

> Corrosives Storage Units: Specify units vented directly to the fume hood exhaust duct, not the hood exhaust chamber. Provide a detail on the architectural/lab planning and the mechanical drawings. Specify polyethylene lining with coved corners.
>
> Flammable/Solvent Liquid Storage Units: Do not vent. If the client requests venting, review with Design Manager and U-M OSEH.

Review potential conflicts between flammable storage base cabinets and cupsinks. Not all manufacturers have resolved this conflict for their standard cupsink sizes and locations. Avoid placing cupsinks over flammable storage base cabinets. Non-standard placement or non-standard size of cupsinks may also cause problems.

Biological Safety Cabinets, Laminar Flow Clean Benches, Hybrid Hoods

Before specifying, verify with the Design Manager that they are to be included as part of the fixed construction. Select the type, size and class of these units in conjunction with the Design Manager and U-M OSEH representative.

If an exhaust connection is required to a Biological Safety Cabinets, verify with U-M OSEH the type required, direct or thimble connect. Connection are typically made via an indirect, hood mfg. provided, thimble (canopy) connection.

For BSCs, provide a minimum of 12" clearance on each side of the cabinet and between the top of cabinet and the ceiling, to allow service and testing. Provide an electrical outlet for the BSC power plug in a location that allows unplugging without moving the BSC (mount the outlet on a wall or casework to the left or right of the BSC or in the leg space below the BSC).

Performance and Testing: Fume Hoods/BSCs/Clean Benches/Hybrid Hoods

Laboratory chemical fume hoods:

- Typically specify to meet the As Manufactured (AM) ASHRAE 110 performance requirements found in U-M Master Specification 115313 Laboratory Fume Hoods, BSC's, Specialty Hoods and Acid Flammable Cabinets. Performance requirements for both standard (those operating at 100 fpm average face velocity) and RFV hoods are provided in 11 5313. These performance requirements may be inadequate for hoods which are to be used for extraordinary purposes, such as those involving highly toxic chemicals, high production volumes, or high-hazard radioactive materials. In such cases, the Design Manager and U-M OSEH shall provide direction regarding alternative AM or As Used (AU) testing.
- In some locations, additional As Installed (AI) testing may be required for a certain percentage of fume hoods. This is most likely to occur in new research buildings or areas with a high density of hoods. The Design Manager and U-M OSEH will provide direction regarding whether AI testing is required and, if so, the quantity and type to be tested. Indicate the hood quantities and types to be AI tested in the design documents.

Biological safety cabinets, laminar flow clean benches and hybrid hoods:

Provide performance criteria for within the specification sections. When a function of these devices is to provide *personnel protection*, performance requirements *for capture* should typically match U-M's 115313 performance requirements for standard chemical fume hoods.

DESIGN GUIDELINE 122000
WINDOW TREATMENT

Scope

Includes design and installation requirements for roller shades and horizontal venetion blinds.

Related Sections

U-M Design Guideline Section:
8.2 Architectural Preferred Manufacturers List
3.2 Energy and Water Conservation

Design and Installation Requirements

Design Requirements

General - A University-wide standard for window coverings does not exist. Window coverings are determined for each building individually, and are based on exterior and interior appearance, building use, environment, existing window coverings in adjacent areas, use and maintenance considerations.

Aesthetics - Base standards for new buildings on both exterior and interior appearance. When designing remodeling projects within an existing building, consider using the same type of window coverings as existing adjacent areas.

Environment - Consider requirements for protecting areas from the glare and heat of the sun. Also consider the environmental conditions in which the coverings will perform, such as exposure to chemicals, humidity, dirt or grease. Review flame retarding properties of window coverings for compliance with codes and condition of use.

Use – Public and student occupied areas need to withstand significant abuse.

Installations – Window treatments shall be installed in such a manor to allow full access to the window for cleaning, screen removal and window operation shall not be impaired.

Style of Window Treatments

Roller Shades – Roller shades should be considered for new construction or major renovation including new window treatments throughout the facility.

- Consult with user to establish openness factor, fabric style and color.
- Consider dual roller in meeting rooms, conference rooms or performance spaces that are on exterior of building. Dual roller option would allow for partial or full room darkening capabilities.
- Operation, consult with user to determine type of use and operation required. Determine Manual, motorized or automated with sensors.

    - Manual, provide nickel plated metal bead style chain. Operation function shall stop and hold shade at any position in ascending or descending travel.
    - Motorized: Motor location preferred within roller tube. Coordinate with manufacturer for maximized motor operation.
        - Connect as many shades as possible to maximize use of motor and minimize operators and cost.
        - Determine if operation is switched near motor, remote, or keyed for security purposes in student areas.
    - Automated: Motorized operation monitored by solar type sensors may be considered.
        - Automated shades allow for the shades to be lowered as the solar gain increases within a space.
        - The sensors also bypass human interaction and may be more effective for managing heat gain.
        - Prior to proceeding with automated shades with sensors develop a cost analysis with a cost payback timeframe for utilities to be saved vs. the cost of the sensor system installed.
- Mounting Recessed: Recessed within a ceiling pocket permitting easy removal and replacement without damaging roller shade or adjacent surfaces and finishes.
- Mounting Surface Mounted: Surface mounted to face of partition above glazing or from ceiling or soffit area above glazing. Provide enclosure, for streamlined view and protection of roller from dirt, dust and debris.
- Direction of roll: Regular from back of roller
- Bottom Bar: metal bar or welded seaming.
- Size: Larger windows need larger shades that can be heavy. Evaluate splitting large sections of glazing into multiple shades. Larger heavy shades may be difficult to operate.

Horizontal Venetian Blinds - Typically specify heavy ladder, top slat and bottom rail construction, good quality of slat materials, and operating mechanisms that eliminate overdrive (preventing damage to worm gear or control wand). Private offices may use blinds fabricated of lighter weight material and without overdrive protection. ConsultDesign Manager.

- Venetian blinds may be utilized in renovation projects to match existing building standard horizontal blinds.

Maintenance –

The University Building Services Department can be requested to clean or repair blinds on a customer pay request basis. Building Services has the abilty to clean standard horizontal blinds up to 10 feet in length. Preferred style for cleaning and maintenance is 1" aluminum mini blinds, preferably by Hunter Douglas..Consult with Design Manager and obtain departments' approval before specifying other types of window coverings. Select only those coverings with acceptable warranties.

Documentation-

Consider having installers visit site to assess mounting surfaces and existing conditions. A site visit can reveal potential issues as well as ensure accurate cost estimates up front.

Ensure notation for the following: Shades/ window treatments should be installed in a manner which will not inhibit operation of the window treatment or the window's function. It is the responbsibilty of the installer to verify function of the window as well as the window treatment as part of a standard installation.

Installation –

The University requires that a qualified dealer purchase and install blinds or shades composed of parts from the same manufacturer (single-source responsibility for both supplier and manufacturer) and labeled as to manufacturer and brand name.

End of Section.

LABORATORY CASEWORK

Scope

Includes laboratory casework, countertops, service fixtures, and related items.

Related Sections

U-M Design Guideline Sections:
DG SBA 5.12 Laboratory Design and Safety
DG 115313 Laboratory Fume Hoods, BSC's, Specialty Hoods and Acid Flammable Cabinets

U-M Master Specification Sections:
MS 115313 - Laboratory Fume Hoods
MS 123553 - Laboratory Casework
MS 260513 - Medium, Low and Control Voltage Cables
MS 262726 - Wiring Devices
MS 265100 - Interior Lighting

Reference Documents:
SEFA 8 - Casework Recommended Practice

Design and Installation Requirements

General:

- Design overall lab layout, provide details, and select materials to facilitate cleaning and decontamination. Review specific requirements and potential 3rd party regulations with Design Manager and OSEH.
- Review laboratory casework / countertop material compatibility with planned chemical usage.
- Review anticipated shelf and casework load requirements.

Casework:

- Specify laboratory grade, SEFA tested, wood or metal casework. Both fixed and flexible systems are acceptable. Select in conjunction with the Design Manager based on the following considerations:
  - Specific user or 3rd party requirements
  - Ease of matching casework selections in future renovations
  - Materials and finishes of existing casework in other areas of existing buildings.
- Fixed casework:
  - Specify secure anchorage to substrate.
  - Specify closed toe kicks, continuous filler panels, closed back panels, and other details to eliminate openings and cavities that could harbor pests.
  - Scribe to adjacent construction for cleanable joints.
- Flexible casework: Configure casework to allow sufficient mobility for cleaning.

Hardware
Specify manufacturer's standard commercial quality, corrosion resistant, heavy duty hardware and as follows:

- Standard surface mounted pulls.
- Full extension, linear ball bearing slides rated at 100 pounds minimum that allow drawer removal without the use of tools.
- Heavy duty shelf clips. Surface mounted metal support strips and clip are not acceptable.

Finish:

- Specify SEFA certified finishes unless chemicals used in project dictate more stringent finish requirements.
- All surfaces exposed to view shall be finished.

Miscellaneous Fillers, Base and Scribes
Specify fillers at gaps between individual cabinets, and between walls and cabinets. Include removable closure panels at back surface of all knee spaces to conceal pipe spaces. Fillers and scribes should match adjacent materials and finishes.
Coordinate extent of flooring and applied base with resilient flooring specifications.

Countertops

- Specify impervious countertops with appropriate characteristics for research needs and as follows:
    - Epoxy Resin: Specify where chemical and heat resistance are needed.
        - 1 inch minimum thickness with 2" overhang from face of cabinet body. Include drip edge
    - Chemically resistant solid phenolic: Specify where a reduced chemical resistance is acceptable and on site fabrication or reduced weight is needed. Before specifying, review impacts to future lab adaptability with Design Manager.
    - Stainless Steel: Specify where seamless surfaces are required, such as processing areas for highly radioactive materials or surgical suites.
    - Acid resistant plastic laminate: Specify only in dry labs with no sinks or chemical use. Before specifying, review impacts to future lab adaptability with Design Manager.
- Do not specify solid surface, hardwood, or other top materials unless approved by Design Manager.

Shelves and Shelf Supports

- Specify 1" minimum thickness impervious shelving materials with appropriate characteristics for research needs.
    - Epoxy Resin: Specify where chemical resistance is paramount. Epoxy shelves are heavy and not needed in most laboratories. Storage of toxic and corrosive liquids is not permitted above the benchtop.
    - Chemically resistant solid phenolic: Specify where a reduced chemical resistance is acceptable and/or there is a need for reduced weight or on site fabrication.
    - Chemically resistant plastic laminate: Specify only where limited chemical resistance and durability is acceptable and as approved by Design Manager. Provide edge banding on all edges.

- Design shelving systems to withstand expected loading and in configurations that promote safe use.
    - Do not specify laboratory shelving installed higher than 6'-6" or 30" below finished ceilings, whichever is lower.
    - Notch shelves around standards to eliminate spaces between shelves and adjacent surfaces. A 1" high raised retaining lip on rear edge may be specified in lieu of notched shelves.
- Design shelving systems to maximize flexibility within both the individual lab and the overall building. Consider the following:
    - Provide consistent shelf lengths of 30" or 36" to maximize interchangeability in the lab.
    - New buildings: Consider ability to obtain additional components for future modifications.
    - Existing buildings: Provide support systems consistent with building standards.

Accessories

Sinks

Select sink materials that match countertop materials, unless research processes are incompatible.

- Do not specify epoxy resin sinks where thermal shock from dry ice or liquid nitrogen is expected.

Mechanical Service Fittings

Show and specify mechanical service fittings such as sinks, faucets, gas, vacuum and air outlets, and similar devices as part of Section 123553, for installation by plumbing trades.

Fittings for water, gas, air, vacuum and similar services should be brass, with at least 81 percent copper content.

Water fixtures should always be specified with integral vacuum breakers in every application. Integral vacuum breakers are available for almost all types of fittings, however, in the rare case where integral vacuum breakers are not available for a required fitting, provide in-line type units.

For deionized or reverse osmosis water outlets, specify a material that matches the distribution piping material. Consider chrome plated brass with a lining material matching the distribution piping material, for outlets likely to be abused. Recirculating type faucets should normally be specified for very high purity DI applications (≥10 mega ohm-cm).

Electrical Service Fittings

For modular casework systems, specify electrical service fittings (outlets, switches, and similar devices) as part of Section 123553, for installation by electrical trade. Comply with associated electrical master specification sections and preferred manufacturer list. For fixed casework systems, specify electrical service fittings as part of divisions 26 and 27.

Coordinate locations of electrical/data outlets, surface raceway, lighting, and similar electrical items with casework layout. Consider the following:

- Equipment layout and impact to cord length and configuration

- Ground fault circuit interrupter receptacles, as required by code.
- Task lighting to reduce the need for artificial ambient lighting and to lessen shadows on the work-surface.
- Consider continuous dual channel raceway for future flexibility.

DESIGN GUIDELINE 132100
CONTROLLED ENVIRONMENT ROOMS

Scope

In general, follow the guidelines below when specifying package environmental rooms and related items. Several aspects of environmental rooms require close coordination with work of other sections. Among these are:

- Casework and shelving.
- Structural steel.
- Mechanical utilities.
- Electrical utilities.

Clearly indicate in specifications and on drawings all mechanical and electrical work which is required within the controlled environment room and which is required for connection to building utilities. Make sure that the equipment specification contains language that this work must conform to the requirements of Division 21, 22, 23 and 26 specification sections.

Include in the Specifications a requirement for submitting an Installation Manual (with the other project submittals) and an Operations and Maintenance Manual (prior to project completion).

Environmental rooms should be included in the list of equipment requiring commissioning in the project.

It is the Architect/Engineer's responsibility to obtain from the client and the Design Manager a complete understanding of how the environmental room(s) will be utilized and occupied and the required operating conditions (including special requirements such as the need for backup power and cooling). Backup power and cooling should not be provided routinely. It should be reserved for critical operations.

Related Sections

U-M Design Guideline Section:
1. Code and Regulatory Agencies

Design and Installation Requirements

General

No University-wide standards exist for interior and exterior panel materials or finishes. Most commonly, painted aluminum exteriors are specified with either painted aluminum or stainless steel interiors.

Size unit to suit user requirements and available area. Specify height requirements as well as length and width. Manufacturers have unique standard sizes, so close tolerances will need

special coordination during design. In general, avoid specifying units with less than 7.5 feet interior height (approximately 8 feet outside dimension).

Provide necessary wall reinforcement for shelving, countertops, equipment and any other wall-mounted items.

The door hardware must include a break-away type latch (with cylinder lock if needed) and inside safety release handle so that the door can be opened from the inside even if it is locked.

Provide slip-resistant flooring.

Provide adequate access, clear of any interference from other building elements, to the condensing unit and any other equipment mounted exterior to the unit. This access must incorporate a reasonable means of getting from the floor to the top of the unit (for example room for a ladder from the floor to the above-ceiling space). In most circumstances, access through a 2 x 2 ceiling grid will not be considered adequate unless portions of the grid can be easily dismantled to allow for a larger opening. Include a fluorescent light fixture, power receptacle, and switch mounted in the ceiling space to provide illumination and power for servicing at top of unit. Clearly delineate the required access on the drawings.

Consider enclosure panels around the top of units which do not meet suspended ceiling height. Panels may need to be vented and removable to accommodate roof-mounted equipment.

For environmental rooms that will be used for crystallization, provide the following special features:

- Remote mounted compressor/condenser units (not mounted on roof of environmental room).
- Self-closing and sealing doors.
- Quiet relays and switches.
- Refrigeration system piping, blower, dessicant wheel (if any) and other vibration sources mounted on vibration isolators, and not along environmental room walls.

For environmental rooms that will be used to house animals, provide quiet switches and relays.

Operating Requirements

Specifications should include information regarding at least the following project specific criteria:

- Operating temperature range.
- Control range
- Uniformity range
- Estimated door openings per hour and maximum per day
- Number of occupants (maximum at any time and average).

- Heating load in watts of operating equipment (scientific apparatus, etc.) within room. If this load cannot be determined during design, assume heat load will equal 50 percent of outlet power capacity.
- Humidity range if applicable. Do not specify range if special humidity control is not required.
- Ambient conditions of the space in which the room will sit. Identify the maximum adverse condition likely to be encountered.
- Temperature range of process chilled water, if a water-cooled condenser is being used.
- Temperature and humidity range of makeup air (see Mechanical Design Requirements below) being supplied to the environmental room.

Furnishings and Equipment

Manufacturers

Shelving is available through the suppliers of environmental rooms, and is a recommended source of shelving if no casework from another source is to be provided in the environmental room.

Some laboratory casework is available from environmental room manufacturers. Refer to suppliers use inside environmental rooms.

Materials:

- Casework: Painted metal
- Countertops: Epoxy resin
- Free standing shelving: Stainless steel wire post and shelf systems. Consider specifying specifying the following:
  - Inlay mats to creat a flat surface for small items.
  - Lateral stability clips
- Wall mounted shelving: Adjustable heights stainless steel wire shelving designed for environmental room use or standard laboratory solid phenolic shelves on adjustable brackets and standards.

Coordinate design of shelving / casework in environmental rooms with overall lab design.

Structural Steel

Structural steel support frame may be required if remote mounted condensing units are selected. For example, support frames will usually be required when mounting units on building roofs, and when condenser is to be located within the laboratory area, but not on the roof of the environmental room (occasionally necessary, due to overhead space limitations).

Mechanical Design Requirements

Coordinate utility installation, and ensure mechanical design takes into account the following:

- Makeup air to the environmental room: Provide makeup air if the room is to be occupied (rather than just used for storage of materials and samples). Follow Code requirements for ventilation. For other circumstances, the A/E must establish whether ventilation is required or advantageous. In general, if there is not a specifically identified need for ventilation, UM recommends not providing it, since makeup air may introduce unwanted humidity in environmental rooms. If makeup air is provided, exhaust or relief must also be provided. Provide ducted exhaust connections (hard pipe or thimble connection as required) to meet the requirements for both environmental room exhaust and/or dessicant dryer exhaust. Do not allow exhaust to be discharged from the environmental room into the ceiling plenum.
- Heat from condensing coil must be rejected to building exterior or a cooling loop.
- Water-cooled units should normally be specified. Do not specify air-cooled units which reject heat into occupied space or suspended ceiling plenum. Water-cooled units using city water as the primary cooling fluid are not permitted. However, if continuous operation of the environmental room is critical, consideration must be given to backup cooling which might include City water. If city water backup is required, specify an alarm to notify BAS that the unit is operating with city water cooling.
- Provide accessible filters for the evaporator coil.
- Utility piping may be factory installed and concealed in environmental room walls, or may be surface mounted in the field. Either method is acceptable, as long as appropriate coordination of factory and field work requirements is provided. Note that crystallization rooms require piping mounted on vibration isolators.
- Pipe penetrations through environmental room walls must be coordinated with room supplier. Room suppliers may, or may not, want to make the penetrations themselves. Mechanical specifications should call for coordination; leave final decision of who makes the penetration to the Contractor. Penetrations must be sleeved and sealed.
- A drain line must be shown from the evaporator unit drip pan to a safe waste (one containing an air gap). In freezer rooms, the drain line from the evaporator unit drip pan should be routed outside of the room. Coordinate location and consider installing floor drain to accommodate drain line.
- Humidification: If required, the A/E must evaluate the most cost-effective method for providing humidification for the environmental room. If house steam can be made available cost- effectively at the room location, it should be used for humidification. If a steam generator is specified, the water quality for the steam generator must be coordinated with the manufacturer's requirements. Some manufacturers may require treated water of certain resistivity. If this is not available in the building, it may be necessary to provide additional treatment as an option for the steam generator.
- Dehumidification: If required, the A/E should determine the most appropriate and economical method of dehumidification based upon the operating requirements and the type of equipment available from manufacturers. If a dessicant-type dryer is utilized, exhaust must be provided. See additional information regarding exhaust covered previously in this section.

Electrical Design Requirements

Coordinate utility installation, and ensure electrical design takes into account the following:

- Electrical panel and control panel must be provided by room manufacturer
- Electrical outlets and conduits may be factory installed and concealed in environmental room walls, or may be surface mounted in the field. Either method is acceptable (although concealed conduits are preferred), as long as appropriate coordination of factory and field work requirements is provided.
- Conduit penetrations through environmental room walls must be coordinated with room supplier. Room suppliers may, or may not, want to make the penetrations themselves. Electrical specifications should call for coordination; leave final decision of who makes the penetration to the Contractor. Penetrations must be sleeved and sealed.
- Refer to Specification Section 262000 for information regarding the electrical panel.

    1. The panel should feed not only the loads within the room, but also the evaporator unit, compressor unit, control panels and any other equipment associated with the operation of the environmental room.
    2. If possible, locate the electrical panel next to the control panel. Do not locate it on the roof, or remotely from the controlled environment room.
    3. The electrical panel may be incorporated into the control panel, if this is the standard for the manufacturer. If this is allowed, the panel buses shall be braced for the available fault current, and the breakers rated to interrupt the available fault current of the distribution system. The panel shall also be UL listed for the application.

Coordinate connection of refrigeration unit, room controls and recorder, lights and outlets that are specified in Division 26.

- Lighting should be fluorescent (except incandescent for rooms with less than 0° F.).
- Specify UL labeled, vapor-tight light fixtures equipped with two lamps. Refer to Design Guideline Section 265100, and Specification Section 265100 for information on the lamps and ballasts. Provide electronic ballasts where suitable for application.
- Refer to Master Specification Section 262726 for specification information for light switches.
- Provide a minimum of 3 receptacle circuits to the receptacle inside the unit. Refer to Specification Section 132100 and 262726 for specification information on receptacles. Provide ground fault circuit interrupter receptacles within 6 feet of sinks or other water sources. Receptacle circuits shall be 20 ampere rated, and each circuit shall serve no more than 3 duplex receptacles. Adjacent receptacles shall be fed from different circuits.
- Provide a 1" raceway path for any 'data outlet' installed inside the environmental room.
- Data outlets shall be two gang, deep, boxes unless installed in surface raceway. See also Section 272000.
- The controller should be digital and electronic. It should be programmed to maintain the environmental room within the operating criteria. Battery backup of the controller should be considered in critical applications to maintain temperature logs during

power outages or other disruptions. Controller shall be located near access door and maintained in clear view on exterior of unit.

- Recorders: Review with the Design Manager whether the manufacturer's standard chart will be adequate. Recorders for humidity-controlled rooms must include humidity as well as temperature readings.
- Alarms: Ascertain user requirements for both local and remote alarms. For remote alarms, consult with the Design Manager to determine whether alarms will be directly monitored by BAS (Building Automation System), which is typical for University Buildings, or to the Department of Public Safety (via MOSCAD) in special circumstances. At a minimum, provide the following alarms:

  - Common alarm for setpoint deviation or system trouble of temperature, humidity, etc.
  - CO_2 set point deviation alarm and automatic CO_2 safety alarm (for elevated CO_2 rooms only).

DESIGN GUIDELINE 140000
CONVEYING SYSTEMS – GENERAL REQUIREMENTS

Scope

This section defines general requirements for various conveying systems. Refer to individual Division 14 sections for additional requirements.

Consult with the U-M Design Manager for project specific requirements.

Related Sections

1. Codes and Regulatory Agencies
5.6 Parking Structures

U-M Master Specification Sections:
MS142123 – Electric Traction Passenger Elevator
MS142423 – Hydraulic Passenger Elevator
MS144200 – Wheelchair Lift
MS146000 – Hoists and Cranes

Design and Installation Requirements

Preferred Manufacturers and Sub-Contractors

Refer to individual Division 14 Specification Sections.

Operation and Maintenance

On the Ann Arbor Campus, all conveying systems discussed in this section (except as noted) are operated and maintained by the Plant Operations Elevator Shop (734-647-2059) which can be contacted for specific maintenance records, for inspection information or access, and for renovation or replacement recommendations. Most general fund buildings are maintained directly by the Elevator Shop. The elevators at the U-M Hospital are covered under a maintenance contract with an outside contractor, with limited oversight by the Elevator Shop.

The Elevator Shop shall be consulted during the design of all conveying systems, and should assist with review of shop drawing submittals, and O&M manuals for conveying systems.

Inspection and Licensing Requirements

Most conveying systems in the State of Michigan discussed in this section are inspected and certified by the State of Michigan. Refer to 1. Codes and Regulatory Agencies.

Elevators -

Definition

Passenger/service elevators with horizontally sliding door typically for general use of all types, including cars, entrances, controls, safety equipment, and elevator machinery.

Freight Elevators include vertically sliding bi-parting doors with automatic power operation used for transporting food and other equipment.

Application

Passenger elevators are preferred over freight elevators in almost all cases, including "service" applications, where users expect to be moving trash, equipment and materials in the elevator on a regular basis.

Requirements of Regulatory Agencies

Perform all work in accordance with applicable codes, the State of Michigan Elevator Code, the National Electrical Code, and the American Society Mechanical Engineering Code for Elevators, ASME A-17.1 (latest edition accepted by State of Michigan). All tests shall be made in the presence of the authorized representative of such authorities and the Owner's representative.

Comply with U-M Barrier free Elevator Guidelines attached herewith.

Design and Construction Method

The delivery method for elevators specifies installation of specific non-proprietary components with which the University has a successful track record. Installation is done by a pre-qualified **elevator installation contractor**. Installation of "elevator manufacturer's standard" elevator is not acceptable. Refer to Master Specification Sections 142123 and 142423.

Non Proprietary

The non proprietary delivery method shall be evaluated by the design team. A non proprietary elevator allows for maintenance to be done by the elevator shop or an authorized elevator repairman. The componants do not require specific manufacturer knowledge or tools for repair. Non proprietary elevator applications may have a higher purchase and installation cost. This higher installation cost may be offset by lower long term maintenance costs.

Proprietary

The proprietary delivery method shall be evaluated by design team. A proprietary elevator is limiting in that only the manufacturer may service the installed elevator and may require special knowledge for repair. Typically a proprietary elevator is purchased with an ongoing

maintenance plan for a specific term. Service by the Elevator Shop is limited. Consideration should be given to lifecycle cost for installation. A smaller up front purchase and installation cost may be outweighed by the long term maintenance contract requirements. Business units considering this application may consider the impact to their annual maintenance budgets versus original construction costs.

Selection of Type of Equipment

Building end use shall determine elevator type traction or hydraulic. Design Professional to evaluate and provide documentation to support decision. Choice shall be included in BOD and OPR documentation,

For Rise Up To 45 Feet: Select hydraulic or traction type elevator machine. Specify a dry pumping unit. That is, the pump, motor and valves should not be located in the hydraulic reservoir. (Note: Piston stabilizers not allowed)

For Rise Above 45 Feet: Select electric traction elevator machines.

Elevator Speed

Electric Traction Elevators Passenger/Service

- Minimum: 200 ft/min.,
- Maximum: 350 ft/min.

Electric Traction Elevator Freight

- Minimum: 200 ft/min.
- Maximum: 350 ft/min.

Hydraulic Passenger

- Minimum: 100 ft/min.
- Maximum: 150 ft/min

Roped Hydraulic

- Minimum: 100 ft/min.
- Maximum: 150 ft/min.

Hydraulic Freight

- Minimum: 100 ft/min.
- Maximum: 150 ft/min.

ElevatorControl/Controller

For both hydraulic and electric traction elevators: Specify non-proprietary microprocessor controls. Specify remote diagnostics shall be compatible with existing U-M system.

Elevator Type: Traction vs. Hydraulic

Hydraulic elevators are often less expensive than electric traction elevators, and don't require an elevator machine room above the hoistway, and are therefore often preferred by AEs. However, there are limitations and drawbacks to their application. Traction elevators should be installed in lieu of hydraulic elevators where any of the following apply:

- Where total travel exceeds 45 feet.
- High volume applications, where speed of travel is a high priority

Elevator shaft, lobby and machine room location considerations:

Location: Coordinate with the Architect for location in the building for optimum service for the building. elevators should be near stairs

Security: Provide access control at building doors, not with card readers at the elevator landings or in the elevator cars. For security, locate the elevator within the building's access controlled area.

Access to mechanical rooms/ penthouse: Provide access to mechanical rooms/penthouse or basement via a controlled lobby with stair access and a locked keyed to mechanical room in penthouse or in the basement.

Roof access and lighting: Provide a safe access and path from roof access to the elevator machine room.

Elevators Air Lock: An air lock or transition chamber for controlling air pressure during ingress and egress from a multistory building (10) the interior of which is at an elevated air pressure.

Machine Room

Machine Rooms: Elevator machine room may be located overhead, basement or adjacent to hoistway for traditional traction or hydraulic. For machine room less (MRL) it shall be located at the top of the hoistway. The electric driving machine shall be located in a machine space within the elevator hoistway (MRL) or outside the hoistway in an elevator machine room.

Control spaces, and Control rooms: A controller shall be accessible only from a machine room, control room.

Machine/Control Room Lighting: Fluorescent lighting with guard shall be provided in the elevator machine room. Lighting shall be positioned so it does not create shadows while

service personnel are working on major equipment. Minimum of 19 foot candles measured at floor level at any point in the machine room.

Fire Extinguisher: appropriate classification shall be 15 pounds for a fire extinguisher. Mount on the wall of elevator machine room near main entrance.

Machine/Control Room Door: Appropriately fire rated labeled self closing, self locking door.

Machine Room/Control Rooms Door Hardware: Keyed to U-M BEST "ZV" key system.

Elevator Machine Room/Control Rooms Painting: Paint elevator machine room floor with light gray gloss oil based paint. Paint elevator machine room walls and ceiling with white semi-gloss latex paint.

Elevator Machine Equipment: Paint elevator machine light gray with zinc primer paint

Hoist beam: In the elevator machine room above the machine. Size shall be suitable for largest live load.

HVAC: Machine rooms for traction and hydraulic elevators require HVAC systems to maintain temperature between 50F and 95F. System must be capable of operating 24/7/365. Size system for full load (building skin and internal loads, including oil cooler for hydraulic elevators). Ductless split system is generally preferred.

Vents: Many existing, older traction machine rooms include a floor vent that communicates directly with the hoistway. Where found, remove vents and provide 2-hour rated separation in its place.

Area of vents: The area of vents shall not be less than 3.5% of the area of the hoistway nor less than 3 square feet. Control damper with heat sensing.

Pressurization: The elevator machine room serving a pressurized elevator hoistway shall be pressurized upon activation of heat or smoke detector located in the elevator machine.

Plumbing and Mechanical systems: Pipes or ducts conveying gases, vapors or liquid and not used in connection with elevator operation shall not been used in the elevator machine room or hoistway.

Elevator Machine Room Access/Machinery Space: An approved means of access shall be provided to elevator machine rooms and overhead machinery spaces. Access to machine rooms shall not be through restrooms, locker room or associated vestibules. Direct access from a public corridor is strongly encouraged.

Isolation Transformer: Provide isolation transformer per elevator controller manufacturer's recommendation.

Machine Room Less Elevators (MRL)

Control Room Location: The control room shall comply with the code and manufacturer requirements.

Communication: Two-way visual communication shall be installed between the car and the control room. Car position, movement, location and direction shall be monitored from the control room.

Other equipment: No other equipment is allowed in control room.

Signage: A permanent sign shall be placed on the door that will read "MRL ELEVATOR CONTROL ROOM". The letter size shall a minimum of 3/4 " and shall be of contrasting color with that of the background.

Main Floor Signage: A permanent sign shall be mounted on the head jamb of the main floors entrance which shall read "MRL-CONTROL ROOM LOCATED ON _ FLOOR". The letter size shall a minimum of 3/4 " and shall be of contrasting color with that of the background

Working Clearance: A working clearance of at least 3'-6" shall be maintained in front of the elevator controller at all times with the control room door closed.

Disconnect Switch: A heavy duty disconnect switch shall be installed in the control room and in the hoistway within sight of the elevator driving machine and shall be designed so that it can be locked out and tagged out in the open position. When activated, it shall cause power to be removed from the driving machine and brake. It shall also be designed to open a contact in the stop position switch circuit and render the elevator inoperative.

Other Control Room Disconnect Switch and Receptacle: See electrical requirements.

Ventilation: The control room and hoistway must be vented for control of hot smoke and gases. If ventilation is accomplished by means of a horizontal duct, the duct shall have the same rating as the hoistway. Venting may be required by the building code additional make-up air may be required. Design Professional shall evaluate.

HVAC: The control room and hoistway shall be required to maintain at neither a temperature of not less than 55 deg. F. nor more than 90 deg. F. and with manufacturers requirements either by natural air circulation or by an HVAC system.

Hydraulic Elevator Cylinder Unit

Pumping Unit: Pumping unit shall be dry and have the valve and motor located outside reservoir. The unit must be mounted on isolation pads.

Hydraulic Oil Line Access: Provide clear access for hydraulic oil line between machine room and hoistway. No underground piping.

Hydraulic Oil Lines: shall remain in conditioned space from end to end and remain within the building footprint. No buried or counseled lines are allowed.

PVC Pipe: Comply with master hydraulic elevator specs

Cylinder: Comply with master hydraulic master specs.

Cylinder Exterior: Comply with master hydraulic master specs.

Other Hydraulic Elevators

Roped: The car is supported by steel hoist ropes and sheaves, which are moved up and down by a holeless single section piston in a cylinder.

Holeless: The car is connected on each side with a single section position that moves up and down in a cylinder, which mounted on top of the pit floor.

Hoistway

Shaft Enclosures: Comply with SID-F shaft enclosures shall have a fire-resistance of not less than 2 hours where connecting four stories or more and not less than 1 hour where connecting less than four stories. The number of stories connected by the shaft enclosure shall include any basement.

Hoistway Entrance: entrance shall consist of flush hollow metal door panels, bolted unit type frames, sills.

Sills: sills shall be of extruded aluminum or nickel silver construction with non-slip wearing surface. Supported on steel brackets and securely fastened to the floor. If cast sill is in acceptable condition re-use.

Class of Loading for Elevator: Class C1, C2 and C3 loading shall be for sill and platform for all type of elevators.

Shaft Paint: Painting shall include approximately 80% wall coverage with one coat of white paint. Painting required in Housing Building, Parking Structure and Medical School Building. Painting is not required in general fund buildings.

Shaft Lighting: single tube continuous fluorescent light fixture strip (full height of hoistway) with guard. Provide minimum one fixture per floor. Design Professional shall evaluate use of LED in lieu of fluorescent fixtures. This lighting shall be operable from a switch located in the elevator machine room, pit area and at the top floor. Shaft Lighting required in Housing Buildings, Parking Structures and Medical School Buildings. Shaft lighting is not required in general fund buildings.

Hoistway ventilation: Hoistway venting is required per code. Venting of hoistways is not required where the building is equipped throughout with an approved automatic sprinkler system.

Location of Vents: Vents shall be located below the floor at the top of the hoistway and shall open directly to the outer air or through noncombustible ducts to the outer air with back draft damper.

Piping in Hoistway: No piping, duct, electrical conduit, or other materials, etc. for non-elevator related equipment shall be allowed.

Exterior Hoistway: Provide automatically controlled heat in hoistways to provide minimum temperature of 50F, accounting for building envelope losses and infiltration at doors. Finned tube radiation is generally preferred with traps and shut-off valves shall be provided in accessible locations outside the hoistway or use listed/certified electric heaters with disconnect switch for each unit heater.

Pit Area

Construction at bottom of hoistway: Pits extending in the ground shall have noncombustible floors and be designed as to prevent entry of ground water into the pit. The pit floor of any hoistway not extending to the ground shall be of the fire resistive construction having fire-resistance rating at least equal to the required hoistway and have no habitable are under pit.

Pit Lighting: Lighting in pit area shall be a minimum of 10 ft candle measured at any point in the pit area at floor level.

Sump Pumps

- Provide sump pumps in compliance with the Michigan Elevator Code per ASME A-17.1 (latest edition accepted by State of Michigan) and Michigan Plumbing Code.
- Subsoil drains shall not be connected or discharged to elevator pits or sumps.
- Specify a simplex submersible sump pump for each hoistway with a minimum capacity of 3000 gallons per hour.
- Multiple hoistways may be served by a common sump pump sized to remove 3000 GPH per hoistway.
- Provide a union, a check valve, and an isolation valve on the pump discharge.
- Pumps ≤ 1 HP should normally be 120 VAC single phase.
- Pumps > 1 HP should normally be 208 VAC three phase.
- Pump voltages greater than 300 VAC are not permitted by code.
- The pump power cord shall be plugged into a non-GFCI power receptacle located in the hoistway. This arrangement shall serve as the pump disconnecting means in the hoistway. Power to this receptacle shall be controlled by the pump controller to cycle the pump on and off. The receptacle and cord cap shall be protected by a weatherproof cover.
- For *new hoistways* indicate that, at the contractors option, the sump may be either (1) cast- in-place and water-proofed with the same sealer used to water-proof the hoistway floor, or (2) a fiberglass sump. In either case, a sump cover shall be provided.
- For *existing hoistways*, the design should typically include a fiberglass sump with cover.

- Pumps shall be controlled by dual non-mercury float switches consisting of a "normal" level float switch and a "high level" float switch. "Oil Smart" or similar level controls shall not be used. The pump controller shall include a dry alarm contact for monitoring by the Owner's Building Automation System (BAS). This contact shall energize under two conditions: any time the pump runs and any time high level is detected.

    - For elevator hoistways where ground water intrusion into the sump is expected and thus the pump is expected to run frequently, only the high level float shall alarm at BAS (Building Automated System).

- Pump power cord shall not be run in conduit. Float switch, oil level detector cords (where oil separators are used) and any other control wiring shall be run in PVC conduit properly secured to the hoistway wall and floor. Conduit shall be connected to the sump cover and the conduit's inner diameter shall be sealed with sealing putty.
- Pump control panels and oil separators shall not be installed in hoistways or elevator machine rooms.
- Pumps Serving Traction Elevators:

    – Pumps shall discharge to a sanitary drain via an indirect connection.
    – Status lights (pump running, high level) and alarm annunciators associated with pump operation **shall not** be provided. Control panel **shall not** include a pump "on-off" or "hand-off-auto" switch on the panel face.
    – Typical Sequence of Operation for Pump (modify to make project specific): The Pump shall be cycled by the "normal" float switch to maintain normal fluid level in the pit. If high fluid level is detected by the "high level" float, the pump shall start (if not already running). The pump controller shall include a common dry alarm contact (non-latching) for monitoring by the Owner's Building Automation System. This contact shall energize <u>whenever the pump runs</u> and when high level is detected

- Pumps Serving Hydraulic Elevators:

    – Pumps shall discharge to an oil separator. Oil separator shall discharge to a sanitary drain via an indirect connection. Size the oil separator to contain 110% of the volume of the largest elevator hydraulic circuit.
    – Status lights (pump running, high level) and alarm annunciators *associated with pump operation* **shall not** be provided. Control panel **shall not** include a pump or oil detection system "on-off" or "hand-off-auto" switch on the panel face.
    – Specify controls to monitor "half full" and "full" oil level conditions in the oil separator. Specify an annunciator, silence button, indicator lights, and BAS contacts to provide the sequence of operation indicated below.
    – Typical Sequence of Operation for Pump (modify to make project specific):

    The pump shall be cycled by the normal float switch to maintain "normal" fluid level in the pit. If high fluid level is detected by the "high level" float, the pump

shall start (if not already running). The pump controller shall include a common dry alarm contact (non-latching) for monitoring by the Owner's Building Automation System. This contact shall energize whenever the pump runs and when high level is detected.

- Typical Sequence of Operation for Oil Separator Level Alarms:

  When the oil sensor detects a "half full" oil condition, it shall energize the Half Full indicator light, the common annunciator, and the Half Full BAS alarm contact. Pushing the alarm silence button shall silence the alarm but the indicator light and BAS contact shall remain energized until the oil level drops below half filled.

  When the oil sensor detects a "full" oil condition, it shall energize the Full indicator light, the common annunciator (even if previously silenced), and the Full BAS alarm contact. Pushing the alarm silence button shall silence the alarm but the indicator light and BAS contact shall remain energized until the oil level drops below the full level.

Pit Painting: Paint pit floor and walls (up to sill) with two coats of light gray, gloss, and oil based paint. Paint all exposed metal in hoistway (except Guide-rails) with light gray paints two coats of rust inhibitive paint.

Electrical Receptacles: (1) GFCI duplex at 48" A.F.F., and (1) non-GFCI duplex (for sump pump) receptacle at 24" A.F.F.

Access Ladder: Galvanized steel ladder to be mounted to floor and wall shall have skid resistant rungs.

Elevator Car Enclosure:

Car Lighting: Indirect fluorescent or LED coved lighting minimum of 10 foot candle in car at floor level install fixture equally on both side of elevator cab to balance the light. Lighting shall be easy to access to replace. Downlights or drop ceiling are not acceptable.

Emergency Lighting: provide emergency lighting with a battery unit in compliance with code requirements.

Car Dimension: Based on requirements of ADA Guideline and square footage floor requirements for landing per Michigan Code and ASME A17.1 Elevator Code.

Car Door: Flush hollow stainless steel panel's with sound deadening insulation.

Car Ceiling: Canopy ceiling shall be provided, painted white. Drop ceiling systems are not acceptable.

Car Flooring: Finished floor shall be heavy duty "Rubber tile sheet type vinyl" all shall be class "A" securely connected in place "commercial grade carpeting tile" or heavy duty tile or ¼" thick (minimum) checkered aluminum with matte finish. Materials such as stone or

ceramic tile flooring add significant weight to the elevator car increasing equipment sizing and wear over time on equipment. Stone and ceramic tile flooring materials are strongly discouraged. Coordinate flooring material selection with end user and design manger.

Pads and Pad Hooks-Locks: provide pads and pad hooks with locks on walls near top 12" O.C provide educate size and storage cabinet.

Electrical Receptacle in Car: GFCI type duplex electrical receptacle in car approximately 2" above finished floor below car operating panel.

Ceiling Height in Elevator Car: Minimum of 8'-0" car heights.

Elevator Lobby

Hallway Position Indicator: LED (Light Emitting Diode) digital type and good for minimum of 5-years as part of hallway push button.

Hallway Push Button: Vandal resistant illuminated LED type hall push button shall be installed at each floor, fixture shall have up and down buttons at intermediate floors and single buttons at top and bottom floors, buttons shall be vandal resistant stainless steel with integral arrows and shall illuminate to indicate a call has been registered. Button shall remain illuminated until the call has been answered.

Hoistway Access: Hoistway Access features operable from top and bottom landings mounted on door jamb.

Lobby Lighting: 10 foot candle measured 1 foot from the sill at floor level. Feed the lighting with emergency generator power if the elevator can operate on generator power, or provide emergency egress lighting if the elevator cannot operate on generator power.

Landing System

Landing System: The landing system shall provide high speed stepping signals, one-floor-run stepping signals, leveling, and door zone signals. Shall be compatible with controller manufacturer.

Leveling: The leveling and stopping accuracy of the system shall be within 1/4 inch of the floor level and shall correct for over travel or under travel to within the same accuracy, regardless of load variations or direction of travel.

Electrical Requirements

Disconnect Switch location: Locate all disconnecting means for all elevator(s) on the inside surface of the machine room wall next to the strike jam side of the machine room door. Ensure each disconnect is within sight of the elevator equipment it controls.

Main Disconnect Switch: Provide a 3 pole fused elevator power disconnect switch. Switch shall be lockable in the open position.

Lighting Disconnect Switch: Provide a 2 pole, 240 volt, 30 amp fused elevator car lighting disconnect switch. Switch shall be lockable in the open position and contain 20 amp fuses. Feed the switch with a 20 amp emergency power circuit if generator power is available, or normal power if generator power is not available.

Car Receptacle and Fan Disconnect Switch: Provide a 2 pole, 120 volt, 30 amp fused elevator car receptacle and fan disconnect switch. Switch shall be lockable in the open position and and contain 20 amp fuses. Feed the switch with a 20 amp standby power circuit if the elevator can operate on generator power, or normal power if the elevator cannot operate on generator power.

Elevator HVAC: Elevator HVAC unit shall have a dedicated branch circuit with disconnect switch inside the machine room. Feed the switch with standby power if the elevator can operate on generator power, or normal power if the elevator cannot operate on generator power.

Receptacles: Provide 120V GFCI receptacles in each machine room within 6'-0" from the governor location, elevator controller and machine. In the pit area GFCI and non GFCI shall be provided.

Machine Room Light: Machine room light fixtures shall produce a minimum of 19fc at floor level and have lamps protected by wire guards. Light switch shall be located at the point of entry on the lock-jamb side of the access door. Feed the lighting with emergency generator power if the elevator can operate on generator power, or provide emergency egress lighting if the elevator cannot operate on generator power.

Pit Lighting: Locate light with wire guard more than just below (with clearance) the fully compressed buffer. Locate light switch on wall inside the hoistway adjacent to the top of the pit ladder. Feed the lighting with emergency generator power if the elevator can operate on generator power, or provide emergency egress lighting if the elevator cannot operate on generator power.

Isolation Transformer: Individual isolation transformers and individual choke reactors for each hoist motor (controller), and filtering of harmonic distortion when Variable Voltage Variable Frequency (VVVF) AC controllers are utilized.

Electrical Ground Wiring: Ground wire shall be the same size as feeder per Controller Manufacturer requirements.

Emergency Power Operation

Emergency power: Coordinate the need of emergency power with the activity use and project architect. Emergency power is usually needed for high-rise facilities as defined by code.

Standby Power: In building or structure where standby power is required.

Emergency Power Operation: when emergency power is detected, cars shall return to the main lobby one elevator at a time, and remain there with doors open. While each car is being

returned, the other cars shall be shut down so as not to overload the emergency power generator.

One or More Cars: Once all car(s) have been returned to the lobby, one or more cars may be selected to run under emergency power, depending on the capability of the emergency power generator. Selection of the cars that run under emergency power shall be done by the group system. Or If more than one elevator is provided determine with activity input how many elevators are to operate on emergency power

Automatic Selection: the automatic selection may be overridden through manual selection. The actual number of cars allowed to run under emergency power shall be a pre-programmed value and the number of cars allowed to run shall not exceed this value

Disconnecting Means and Panel Location: Must disconnect the elevator from normal lockable power and from emergency power. Automatic transfer switch and disconnect shall be located outside the machine room. The panel for the manual selection switches for each group of elevator will be installed at a location determined by the university.

Override Switch: Manual override switch shall be provided in the main elevator lobby area(s) to override the automatic emergency power selection.

Manual transfer: Standby power shall be manually transferable to all elevators in each bank.

Mechanical Equipment: Where emergency power is connected to elevators, the elevator machine room ventilation, air conditioning equipment and hoistway ventilations shall be connected to the standby power source.

Fire Suppression

Machine Room Sprinkler: In elevator machine room's automatic sprinklers of ordinary or intermediate temperature rating shall be provided with guard. Sprinkler head shall not be installed over any elevator equipment. Provide a supervised shut-off valve with flow tamper switch in the sprinkler line supplying the pit. Locate the valve outside of and adjacent to the elevator machine room.

Pit Area Sprinkler: Sidewall sprinkler(s) with sprinkler guards in the pit area. Locate the sprinkler no more than 2'-0" above the floor. Provide a supervised shut-off valve in the sprinkler line supplying the pit. Locate the valve outside of and adjacent to the pit.

Hoistway Sprinkler: Provide a sprinkler(s) at the top of the hoistway for hydraulic elevators with cylinder or supply piping extending above second finished floor elevation. Provide a supervised shut-off valve, flow tamper switch. These items shall be located outside of and adjacent to the elevator hoistway.

Signage: Provide signage on valve outside of elevator machine room and pit area and shall read "Sprinkler Shut-off Valve for elevator ----"

Test Valve: Provide inspector test connection per code requirements.

Fire Alarms

Fire Alarms Devices: Only visible alarm notification shall be provided in elevator machine rooms.

Fireman Phone Jack: Provide a phone jack in the car as part of COP (Car Operating Panel) for fireman phone jack for high rise building phone jack is required in the elevator machine room.

Fire Alarm: A fire alarm initiating device shall be in the control space and tied in to elevator's fire emergency services.

Smoke Detectors: Stand-alone smoke detectors system shall be installed by elevator contractor

Speakers/Horns For Mass Notification: Speakers shall be mounted in car with a adjustable volume control that shall be adjustable at the elevator car top. Horns shall not be installed inside the car, hoistway or in the elevator machine room.

Hoists and Cranes - Section 146000

Definition

Manual and motor.

Application

Because of the infrequency with which these systems are installed, the University has no established guidelines for these systems. Furthermore, operation and maintenance may not be handled by the Elevator Shop. Consult Project Coordinator.

OUT TO BID

DESIGN GUIDELINES

1.0 CODES AND REGULATORY AGENCIES

2.0 PROJECT PROCEDURES

3.0 SUSTAINABILITY

4.0 SPECIAL INSTRUCTIONS TO DESIGNERS

5.0 SPECIAL BUILDING AREAS

6.0 TECHNICAL REQUIREMENTS

6.1 ARCHITECTURAL

6.2 MECHANICAL

6.3 ELECTRICAL

6.4 SITE/CIVIL

7.0 MASTER SPECIFICATIONS

8.0 PREFERRED MANUFACTURERS LIST

9.0 STANDARD DETAILS AND SCHEDULES

10.0 CHANGES TO DESIGN GUIDELINES

6.2 MECHANICAL

21 FIRE PROTECTION	Last Update	Previous Version	Replaces
210000 Fire Protection	March 2015	May 2003	15300 Fire Protection
22 PLUMBING	**Last Update**	**Previous Version**	**Replaces**
220000 Plumbing Design	April 2014	July 1992	15450 Domestic Hot Water 15455 Water Booster Pumps
220010 Plumbing Specialties	October 2016	April 2014	15430 Plumbing Specialties
220020 High Purity Water Systems	December 2005	July 1990	15460 High Purity Water Systems
220513 Motors	September 2012	April 2009	15170 Motors
220514 Variable Frequency Drives	September 2012	November 2008	15960 Variable Frequency Drives
220519 Thermometers and Gauges	April 2014	May 2003	15130 Thermometers and Gauges
220523 Valves	April 2014	April 1995	15100 Valves
220553 Mechanical Identification and Painting	December 2017	April 1995	15190 Mechanical Identification and Painting
220719 Mechanical Insulation	April 1995		15250 Mechanical Insulation
221113 Basic Piping Materials and Methods	April 2014	September 2012	15060 Basic Piping Materials and Methods 15140 Pipe Hangers
23 HVAC	**Last Update**	**Previous Version**	**Replaces**
230000 Basic Mechanical Requirements	June 2013	January 2001	15010 Basic Mechanical Requirements
230010 HVAC Design	June 2013		15070 HVAC Design

BUILDING COMMISSIONING

CONTRACTS & AGREEMENTS

CONTRACTOR RESOURCES

OTHER LINKS

230011 Fans and Accessories	September 2012	July 1990	15870 Fans and Accessories
230012 Air Filters	May 2007	July 1990	15885 Air Filters
230013 Air Handling Units	April 2014	July 2005	15855 Air Handling Units15850 Air Blending Devices
230014 Packaged Roof Top Air Conditioning Units	May 2003	July 1992	15780 Packaged Roof Top Air Conditioning Units
230015 Fan Coil Units and Blower Coil Units	April 2014	May 2003	15830 Fan Coil Units and Blower Coils Units
230016 Computer Room Air Conditioning	April 2014	March 2004	15785 Computer Room Units
230017 Window Air Conditioning Units	July 1990		15784 Window Air Conditioning Units
230020 Duct System Design	September 2008	February 2007	15890 Duct System Design
230021 Terminal Air Flow Units	March 2009		15896 Terminal Air Flow Units
230022 Grills, Registers, Diffusers and Air Balancing Accessories	April 1991		15880 Grills, Registers, Diffusers and Air Balancing Accessories
230030 Laboratory Ventilation Design	October 2016	December 2014	15910 Laboratory Ventilation
230040 Hydronic Systems and Specialties	May 2003	February 1999	15515 Hydronic Systems and Specialties
230041 Pumps	April 2014	October 2005	15160 Pumps
230050 Chilled Water Systems	October 2005	February 1999	15680 Chilled Water Systems
230051 Water Chillers	October 2005		15681 Water Chillers
230052 Cooling Towers	May 2003	July 1992	15710 Cooling Towers
230060 Mechanical Sound & Vibration Control	March 2004	July 1992	15240 Mechanical Sound & Vibration Control
230593 Testing, Adjusting and Balancing	September 2008		15990 Testing, Adjusting and Balancing
230900 Mechanical Systems Controls	August 2015	March 2015	15975 Mechanical Systems Controls
230930 Refrigerant Monitoring System	August 2015	March 2004	15635 Refrigerant Monitoring System
232216 Steam Specialties	April 1991		15525 Steam Specialties
235000 Hot Water Heating Systems	July 2017		

© 2018 Regents of the University of Michigan

326 East Hoover, Ann Arbor, MI 48109-1002
Phone: (734) 763-3020
Contact Us

DESIGN GUIDELINE 210000
FIRE PROTECTION

Scope

Fire protection requirements specific to the University of Michigan including design document requirements, density requirements, special requirements for dry systems, fire and jockey pump requirements, and other miscellaneous requirements.

Related Sections

U-M Design Guideline Sections:
104400 - Fire Extinguishers
283100 - Fire Detection and Alarm Systems

U-M Master Specification Sections:
211313 - Wet Pipe Sprinkler Systems
213113 - Fire Pumps

General

All new buildings shall be protected by a hydraulically designed wet-pipe sprinkler system, designed to comply with requirements of NFPA and Factory Mutual (FM).

The University normally requires the installation of wet-pipe sprinkler systems in existing buildings undergoing major infrastructure upgrade not presently protected by fire protection systems.

In existing buildings with hydraulically designed systems, any additions, deletions and/or changes shall not compromise the integrity of the system. Water supply shall be tested and improved as required to meet requirements of NFPA , FM and City of Ann Arbor Standards. A/E shall arrange for testing by U-M Plumbing Shop through U-M Project Coordinator.

Provide standpipe system where required by code.

Design Requirements

Design drawings (plans) shall include, at a minimum, location of :

- In-coming water supply and fire department connection(s) (Siamese)
- Fire pump and controller, jockey pump, and test header
- All risers, standpipes, zone control valves, fire department valves and fire hose cabinets
- All mains four inch diameter and larger
- Inspector test /drain, service drains

- Sprinkler head locations, sprinkler zoning (with area and criteria stated)

Design shall include fire protection system riser diagram, with at minimum:

- In-coming Water supply and Siamese connections
- Fire pump and controller, jockey pump, and test header
- All risers, standpipes, zone control valves, flow switches, fire department valves and fire hose cabinets
- Inspector test /drain

Design shall include, at minimum, calculation, selection and detail of in-coming water service, fire department connection, fire and jockey pumps, test header, stand pipe/ inspector test/ zone control valves, pipe penetrations, and special systems.

Wet Suppression Systems

Sprinkler density shall be per U-M Master specification.

Discharge from test connections be piped to building exterior or indirect drain of adequate capacity.

Provide dry pendant heads for any room operating at or below 40° F (including cold rooms, environmental rooms and freezers). For areas where piping is subject to freezing, dry sprinkler heads or dry pipe systems should be used in lieu of antifreeze systems due to antifreeze flammability concerns. Whenever possible use dry sprinkler heads instead of dry pipe systems. Wet pipe sprinkler system shall normally be installed throughout including electrical rooms, substations, mechanical rooms, telephone closets, and computer rooms.

Dry Pipe Sprinkler Systems

Due to significant problems with microbiologically induced corrosion (MIC), the following requirements for dry pipe systems apply to U-M's Ann Arbor campus:

Piping for dry systems shall be specified as **Schedule 40** ASTM 53 **galvanized steel in all pipe sizes**, screwed galvanized cast or malleable iron fittings through 2", grooved couplings for 2-1/2" and larger pipe sizes.

Dry pipe systems shall be specified as installed with the longitudinal weld seam located above the horizontal centerline of the pipe, and with drain valves installed at all low points regardless of trapped water volume. Require that mains and branch lines be pitched at least $^1/_2$ in. per 10 ft in all locations, including in non-refrigerated areas (areas not subject to freezing).

Fire Pumps

Install automatically controlled fire pumps on all fire protection systems where hydraulic calculations indicate that the city water pressure is not adequate to supply the building sprinklers and/or standpipe systems. Fire pump size shall be based on the requirements of

NFPA. Water supply to fire pumps shall meet the requirements of NFPA. When a fire pump may feed multiple buildings, special approval from the University Project Coordinator is required for issues related to fire alarm system coordination; possible multiple building conflagrations; and system sectionalizing.

Jockey Pumps

Install jockey pumps on all fire protection systems where flow is detected and monitored, even if a fire pump is not required. Jockey pump head shall be adequate to maintain static pressure required at the top of the system. Size pump flow per NFPA.

Special Systems

Special fire suppression control systems should be located outside the area served. Supply cylinders should be stored in a room or location other than the protected room. A separate room is preferred.

Dry chemical extinguishing systems should be used in all kitchen and cooking locations where grease and oil are used.

Material Requirements

Pipe material per UM Master specifications.

Installation Requirements

Shop drawings shall be forwarded to FM, the Architect/ Engineer and the State of Michigan Bureau of Construction Codes and Fire Safety. Refer to U-M Master Specification.

Install sprinkler heads in center of 2'x2' ceiling tiles, and in center of 2'x2' area for 2'x4' ceiling tiles.

Pressure Testing

Pressure test fire protection systems per NFPA and FM.

Pressure testing is not required for minor relocations of sprinkler heads.

DESIGN GUIDELINE 220000
PLUMBING DESIGN

Scope

General plumbing design, booster pumps.

Related Sections

U-M Master Specification Sections:
221123 Domestic Water Booster Pumps

Design Requirements

New Construction

Potable hot water should be obtained from the Central Campus Power House, as delivered through existing utility tunnels. The A/E should coordinate the tie-point to the existing tunnel distribution system with the University's Utilities Engineer through the University Project Coordinator. Prior to this coordination meeting, the A/E should calculate the maximum demand and average consumption requirements of the new facility.

Physically handicapped hot water should be tempered with cold water to maintain 110°F water at the fixture. Provide check valves in both hot and cold connections to tempering valves. Pressure compensating designs shall always be used.

In all new facilities the hot water distribution system shall be of the continuous recirculation design.

Renovation

Potable hot water to meet the needs of new fixtures in renovation projects should be obtained from the existing building system.

The A/E must demonstrate to the satisfaction of the University Project Coordinator that the existing building distribution, primary heating and secondary heating systems are sufficiently large to support the new demands imposed due to the addition of fixtures in a renovation project without adversely affecting other users within the buildings. If the existing systems need to be enlarged, this determination should be made early enough for funds to be allocated within the renovation project.

Domestic Water Booster Pumps

U-M Master Specification Section 22 1123 shall be used as the basis for domestic water booster pump specifications on projects. The A/E shall edit the U-M specification to make it project specific. Turn on hidden text and read all spec. editor's notes when editing the specification.

Typically specify variable speed systems. Consider constant volume staged pump control when friction losses are low relative to fixed head (static head and residual pressure) requirements.

When using variable speed pumps, the pressure sensor(s) used to provide the controller input of distribution pressure should be located at the most hydraulically distant location, in a location accessible for maintenance. The sensor may be located in a small reservoir tank (approximately 5 gallon capacity) which will act as a capacitor to dampen out the impulsive pressure changes.

DESIGN GUIDELINE 220010
PLUMBING SPECIALTIES

Scope

Water hammer arrestors, back flow preventers, pressure reducing stations, city water meters, mixing valves (hand washing), floor drains, trap primers, eye washes, small RO systems to improve drinking water.

Related Sections

U-M Master Specification Sections:
221119 Domestic Water Piping Specialties
224200 Plumbing Fixtures

U-M Standard Details:
15300001 - Fire Service System Detail
15411001- Domestic Water Service System Detail

Design and Installation Requirements

Water Hammer Arrestors

Water hammer arrestors shall be elastic chamber type in stainless steel casings certified to PDI standard WH 201, as specified in U-M Master Specification 221119.

Install ball valves for isolating water hammer arrestors for service.

Backflow Prevention

Utilize the U-M details indicated above. These details are intended to reflect both City of Ann Arbor and U-M requirements, but shall be revised as required to make project specific (e.g. to reflect parallel backflow preventers for those projects using such an arrangement). For reduced pressure zone type back flow preventers, indicate where the preventer drain is to be routed to.

Type of Back Flow Prevention Device Required:

The type of backflow prevention device *at the building entrance* must be approved by the City of Ann Arbor. The following reflects what is typically acceptable to the City, projects should therefore initially propose (with explanation) the following backflow prevention devices for City approval. *In all cases, correspondence with the City shall be made through the U-M Design Manager.*

Domestic Water At Building Entrance:

All building types except hospital and medical buildings, and high chemical hazard buildings:

Buildings without pressure booster pumps and a single feed from the city main: No back flow prevention required at entrance. Protect individual backflow hazards within the building with the type of backflow prevention device required by code, located at the hazard.

Buildings with two or more feeds from the city main, or with pressure booster pumps: Testable UL approved double check valve assembly on each feed from the city main. Protect individual backflow hazards within the building with the type of backflow prevention device required by code, located at the hazard.

Hospital or medical buildings, and high chemical hazard buildings:

Provide UL approved reduced pressure zone (RPZ) backflow preventer (BFP) type. Normally provide two RPZ assemblies each sized for 50% of the total required flow rate, piped in parallel, to allow one RPZ to be repaired while the other remains in service. Note that the City does not consider most lab buildings as high chemical hazard buildings. Protect individual backflow hazards within the building with the type of backflow prevention device required by code, located at the hazard.

Fire Service At Building Entrance, All Building Types:

Normally a testable double detector check valve assembly approved for fire service is acceptable. Protect individual backflow hazards within the building, e.g. a glycol zone at a loading dock, a small dry pipe zone chemically protected against microbiologically induced corrosion (MIC), with an RPZ BFP device located at the hazard. For buildings where extensive portions of the fire protection system are chemically treated to avoid MIC or for other purposes, provide a RPZ BFP device at the building entrance. Normally provide two RPZ assemblies each sized for 50% of the total required flow rate, piped in parallel, to allow one RPZ to be repaired while the other remains in service.

Back Flow Prevention and City Water Meters Located in Vaults:

Contact City of Ann Arbor through the U-M Design Manager for specific requirements regarding vault construction.

Individual Hazards Within Buildings:

Install backflow preventers within building as required to isolate hazards from distribution piping. Typical locations are make-up to chilled and heating water systems and cooling towers, and equipment connections, such as lab and vivarium equipment. When cost effective, aggregate such connections onto a non-potable water circuit to reduce the number of BFP assemblies, in particular RPZ type. When RPZ type BFPs protect systems that produce rapid pressure fluctuations downstream of the RPZ, provided a soft seated non-slam check valve immediately downstream of the RPZ. This prevents spitting out the RPZ drain port. Examples are systems with fast closing valves or rapidly cycling pumps (RO machines).

Pressure Reducing Valve (PRV) Stations

The A/E should separate the potable water distribution risers in high-rise buildings with only the upper floors served by booster pumps to preclude the need to add PRVs to the lower floor piping.

The PRV shall be sized for 25 percent reserve capacity at a 250 psi working pressure.

As appropriate, PRVs should be equipped with a smaller auxiliary regulator to handle low demands. The valve should include a full compliment of gauges and accessories.

Cold Water PRV set points shall be coordinated with hot water system pressure and/or hot water PRV set points, in particular when using the Campus hot water system, to prevent significant pressure imbalance between the two systems.

City Water Meters

Each building shall contain a water meter.

Provide calculations demonstrating the expected range of city water flow rate at the building entrance, for City of Ann Arbor review. For new buildings as well as major renovations in existing buildings, the size of the meter will be negotiated with the City. The City may request that existing meters be replaced. *In all cases, correspondence with the City shall be made through the U-M Design Manager.*

A separate city water meter is required for the following:

- Domestic water (building entrance)
- Cooling tower make up water
- Cooling tower blow down
- Irrigation system
- Other significant uses which do not ultimately discharge to the city sewer

Route cooling tower overflow drains through the cooling tower blow-down meter.

As indicated on U-M's Fire Service System Detail, for fire service to a building, the City will provide a FM and/or UL approved bypass meter for the testable double detector check valve assembly.

Coordinate meter installation with the University Design Manager. The meters shall be purchased by the University (include cost in project budget) from the City of Ann Arbor. Installation shall be performed by the contractor.

City magnetic flow meters require 120VAC power with a lockable disconnect located at the meter.

City meters require a remote read-out device (a small, wall mounted box) hard-wired to the City meter. This allows the City to read the meter remotely with wireless technology. The City

system has good range and typically can read the device even when mounted on a high building roof. The remote read-out device must be mounted above grade and normally should be located on an outside building wall. However, the device usually works when mounted inside the building on an outside wall, which may be preferable when the distance between the meter and an accessible outside wall location is excessively long. Devices that don't work will require relocation. Meters located outside (e.g. on a roof near a cooling tower) can have the read-out device mounted at a convenient, appropriate location near the meter. In all cases the device must be mounted at a location accessible (no ladders required) to a City meter technician; inside locations should typically be mechanical rooms.

Thermostatic Mixing Valves for Hand Washing Facilities

The Michigan Plumbing Code section 607.1 (2) (h) has been modified by local rule as follows:

> An ASSE 1070 mixing valve (water temperature limiting device) is permitted to control up to 5 accessible plumbing fixtures within the same room. The ASSE 1070 mixing valve shall be certified for a minimum flow rate of 0.5 gpm or less.

Therefore accessible plumbing fixtures at U-M do not require dedicated mixing valves for the conditions stated above. This modification is incorporated into the U-M Plumbing Fixture Specification 224200.

Floor Drains

Generally, floor drains shall not be installed in laboratory areas or below emergency showers. Consult with the U-M Design Manager and building users for possible exceptions. Consider need for installing floor drains at high traffic building entrances (e.g. below walk-off mats).

Trap Primers

Trap primers are not required at the University of Michigan, regardless of Michigan Plumbing Code dictates, except for high hazard circumstances, (eg., BSL3 and BSL4 labs), and applications where a dried trap might pose an undetected IAQ problem, (eg., floor drains located inside air handling units), or where it is difficult to re-prime a trap, e.g. below walk-off mats. Therefore trap primers should not be specified for toilet room, mechanical room, safety shower, and similar low hazard floor drains. The Designer shall identify high hazard or other circumstances as mentioned above and include trap primers for such drains. For drains requiring trap primers, the use of multi-trap primers, including electrically operated types, is permitted. Multi-trap primers should conform to ASSE 1018 or ASSE 1044, but do not have to be specifically listed as conforming to those standards, provided their design incorporates an ASSE approved back flow prevention device.

Emergency Eyewashes and Showers

Freestanding eyewashes shall be designed to drench both eyes simultaneously and have a waste line connected to the building sanitary waste system.

Water supplies to eye washes and showers shall be tempered.

Small RO Systems to Improve Drinking Water

Small RO systems (often located below sinks) used to improve the quality of water for drinking, coffee brewers, etc., are to be avoided due to water waste during operation and on-going maintenance, back-flow and sanitation issues.

DESIGN GUIDELINE 220020
HIGH PURITY WATER SYSTEMS

General

This section describes design requirements for high purity water systems generally used to supply laboratory sinks and equipment, typically know as Reverse Osmosis/De-ionized (RO/DI) systems. This guideline also addresses RO make-up for clean steam humidification systems and soft water make-up for boilers.

Related Sections

U-M Design Guideline Sections:
230000 – Basic Mechanical Requirements

U-M Master Specification Sections:
220514 - Variable Frequency Drives

Schematic Drawings:
RODI DG Schematic.pdf
RO DG Schematic.pdf
Softener DG Schematic.pdf

System Performance Criteria

The A/E shall determine system performance based on a careful evaluation of specific program requirements. High purity water systems typically have high first and on going operational costs, therefore the A/E shall take particular care not to "over-specify" the system. The proposed system performance will be presented no later then SD phase, for approval by the U-M Design Coordinator. It shall be updated through CD phase, as the requirements for the exact equipment served becomes more precisely determined.

The A/E shall provide the following design criteria for approval:

- Make-up rate in gpm
- Daily production in gallons per 24 hour day
- Storage tank size (gallons)
- Distribution loop flow rate (gpm) and head (ft.)
- Distribution loop temperature
- Primary DI loop (to storage) product quality: Resistivity (megohm-cm), silica, total organic carbon (TOC), sodium, chloride, sulfate.

- Distribution loop water criteria: Resistivity (megohm-cm) , silica, TOC, sodium, chloride, sulfate, oxygen, boron, particulate (maximum particle size and quantity per unit volume), bacteria (viable per ml), Ph.
- Point where distribution loop water criteria is to be achieved (e.g. at point of use, leaving post filter, etc).
- Outline calculations identifying how make-up rate and distribution flow rate and head were determined

Not all the criteria listed above will apply to a project, for instance TOC limits typically apply to semi-conductor projects, but not to generic research labs. The A/E shall explicitly indicate which criteria are not applicable when providing design criteria for approval.

Water resistivity above 10 megohm-cm (CAP-1) is not typically required for general lab use, however the A/E shall determine exact resistivity requirements based on the program.

Plans and Specification Requirements

Include a clear statement of the system performance criteria within the specification.

- This statement shall include all the system performance criteria listed above.
- Obtain the most recent city water analysis and include in the specification.
- Include the minimum expected feed-water temperature.
- Indicate that system performance be guaranteed based on the stated feed-water analysis, including temperature.

Plans shall include a detailed system schematic, showing the arrangement of major system components, instruments, meters, isolation valves, gages, etc.

The system schematic shall also indicate make-up flow rate, distribution flow rate, distribution pump GPM and head, and storage tank volume.

The system schematic shall indicate piping materials for feed water, RO water, distribution supply, and distribution return.

Typical Component Arrangement and Requirements

The following sections outline the typical RO/DI system arrangement at U-M and the requirements for individual components, starting at the feed-water input. Outline level schematics for typical RO/DI, RO, and softner systems are provided for reference under the Related Documents section of this Guideline. It is not the intent of this section to dictate exact system arrangement; the A/E shall design a project specific system to meet program requirements. However, variances from this arrangement shall be called to the attention of the U-M Design Coordinator, for approval.

Feed Water

Provide back-flow prevention (BFP) at the feed water input to the system.

Provide a pressure gage up and downstream of the BFP.

Evaluate the benefit of preheating feed water to improve RO system performance (by improving RO membrane production rate, allowing reduction in RO size). Consider mixing valve or heat exchanger. Preheating shall be evaluated on large systems (make-up rates above 10 GPM), however its use typically mandates a distribution loop cooling heat exchanger be employed as well.

Feed Water Pre-Filter

Provide simplex 10 micron cartridge (disposable element) filter with bypass. Specify minimum 20" long cartridges. Provide pressure gages across filter.

Water Softener

Duplex softener arrangement, demand (flow) initiated type, common brine tank, shall be provided. Very small systems not requiring 24/7 production may utilize a simplex arrangement. For simplex arrangements, specify demand initiated/timer based regeneration type softeners interlocked to prevent RO operation during softener regeneration cycle.

Provide a hard piped bypass around the softener arrangement.

Softeners for boiler water make-up systems shall be duplex demand initiated type.

Brine tanks shall be specified large enough to hold enough salt for 1 month's soft water production. Maximum brine tank height shall be 4 feet. Indicate that the brine tank over-flow is piped to a floor drain.

For systems with make-up rates above 15 GPM or with an estimated salt use in excess of 1000 lb.s/month, bulk brine storage system shall be provided.

Provide pressure gauges across softener bank.

Carbon Filter

Provide duplex carbon filter piping arrangement. U-M utilizes a carbon bottle exchange program where a vendor replaces expired carbon bottles, therefore back-washing type carbon filters should normally not be specified and will only be considered on extremely large systems. The design should indicate all required piping for a duplex arrangement including flexible hoses for carbon filter bottle connection. Indicate carbon filters are supplied by U-M.

Provide pressure gauges across carbon filter bank.

Reverse Osmosis Prefilter

Provide simplex 1 micron cartridge (disposable element) filter without bypass. Specify minimum 10" long cartridges. Provide pressure gages across filter.

Reverse Osmosis System

Specify a skid mounted system furnished with controls providing automatic and manual operation. RO system shall include low pressure pump cut-out, relief valve, meters to monitor product and reject flow rates (typically rotometers) and isolation valves to allow pump and membrane change-out.

Provide a resetable totalizing water meter that indicates total RO product produced.

Mixed Bed De-Ionization Bottles (Make-Up Loop)

Not normally required. A pair (or multiple pair on large systems) of mixed bed resin bottles, located upstream of the storage tanks, may be required for ultra-pure/semi projects. The same piping arrangement and bottle exchange requirements described for the distribution loop mixed beds applies. See below.

Resin Trap

If mixed bed DI bottles are provided in the make-up loop, provide a resin trap downstream consisting of a basket strainer with a 1/64" mesh opening strainer element. Provide pressure gages across the strainer.

Storage Tank(s)

The A/E shall carefully evaluate storage tank size based on program requirements. Minimum tank sizes adequate to hold a 1/2 day's worth of production are typical.

Tanks shall be translucent with a bottom sloped to the outlet connection. Tank vents and over-flows shall be protected by suitable filters. Provide a tank drain piped to a floor drain.

Tanks shall be equipped with clear, flexible plastic tube ("tygon") type site glasses. Provide isolation valves on site glasses. Specify external tank level sensors located in site glass piping that allows disconnecting the site glass tube to test the level controls without draining the storage tank.

Distribution Pumps

Normally provide 100% redundant distribution pumps.

Indicate isolation valves and pressure gages on the inlet and outlet of each pump, and provide a check valve on the outlet side of each pump.

Provide a means to control pump flow. Variable frequency drives (VFDs) are preferred, except for very small systems. VFDs shall comply with UM master spec section Variable Speed Drives.

Specify a low pressure cutout switch for the distribution pumps.

Due to the relatively fragile piping materials used on RO/DI systems, often at high pressures, a relief valve with discharge routed to the storage tank is recommended.

Ultraviolet Sterilizers (Upstream of Distribution Loop Mixed Bed De-Ionizers)

UV filtration upstream of the mixed beds is not typically required except in special circumstances, such as systems serving semi-conductor fab.s.

Mixed Bed De-Ionization Bottles (Distribution Loop)

U-M utilizes a mixed bed bottle exchange program where a vendor provides re-generated resin bottles as on-line bottles expire. Therefore the A/E specification should indicate that the mixed beds are provided by UM, i.e. *not* provided by the contractor. The standard bottle size utilized in this program is 3.6 cubic feet. Therefore the A/E shall design the mixed bed "farm" utilizing this bottle size. Since bottle capacity is typically 3-4 gpm/cubic foot of resin, multiple pairs of bottles are normally required. Each bottle pair shall be indicated as piped in series, with a "quality light" located between each bottle pair to indicate when the upstream bottle quality has degraded.

On extremely large systems, larger bottle sizes may be considered, not to exceed 15 cubic foot size. Larger bottle sizes must be approved by U-M Plant Engineering.

Normally Type 1 resins are utilized on U-M laboratory systems. Ultra pure systems (e.g. semi-conductor applications) may require special mixed bed resins, such as virgin semi-conductor grade. Such resin requirements shall be reviewed and approved by the U-M Design Coordinator.

Ultraviolet Sterilizers (Downstream of Distribution Loop Mixed Bed De-Ionizers)

Provide a simplex UV sterilizer downstream of the distribution loop mixed beds.

Provide a hard piped bypass around the UV sterilizer.

Post Filters, Distribution Loop

Provide simplex cartridge (disposable element) type filter with bypass, equipped with 0.2 micron absolute filter elements. Specify minimum 20" long cartridges. Provide pressure gages across filter.

Evaluate higher levels of absolute filter performance ("ultra filters") for ultra pure or critical systems (e.g. semi-conductor applications).

Heat Exchanger, Distribution Loop

Provide when the program dictates that a maximum distribution loop temperature be maintained. Evaluate if a distribution loop heat exchanger is required due to feed-water pre-heating or other factors, to maintain loop temperatures within reasonable limits. Give

consideration of final RO/DI water use, pipe expansion concerns, etc. Plate and frame type heat exchangers are preferred.

Sample Ports

Provide sample ports at each location shown on the sample system diagram.

Component Redundancy

For critical systems, in addition to the minimum redundancy requirements specified in the above sections, provide:

- Multiple storage tanks (50/50 or similar type arrangement in lieu of a single tank)
- Redundant final filters

Redundancy for other components, though not typically recommended, may be appropriate. A/E shall evaluate with U-M user and U-M Design Coordinator.

Distribution Piping

RO/DI systems shall be designed for continuous circulation, without dead legs. Dead legs are defined as any dead-ended section of pipe more than 4 pipe diameters long that occurs when a valve is closed. Small less critical systems (total distance from point of use in the 100 foot range) may be non-circulating type

Provide a means of balancing and reading (gpm; rotometers one method) each major supply and return sub-loop, for example: on a floor by floor basis.

Hi purity water faucets with barbed terminations should be the recirculating type with integral back flow preventer, spring return handles preferred.

A back-pressure regulator is typically required on the system return main (near the connection to the storage tank).

Diaphragm or butterfly valves should be specified for supply piping downstream of the distribution loop mixed beds. However, in lower grade systems, carefully evaluate the benefit of diaphragm valves due to the high cost of this valve type. Ball valves may be used on returns and else where. Valve material should typically match associated piping material.

Provide pipe hanger details for hanging plastic pipe.

Bare polypropylene piping should not be run in plenum returns.

Piping Materials

Typical piping materials for RO/DI systems shall be as follows:

RO skid to Storage Tank:

- Sch 80 CPVC, solvent joints (all systems)

Storage Tank to inlet of Distribution Mixed Beds:

- Polypropylene (research labs, and ultra pure applications such as semi)

From Distribution Mixed Bed Outlet (and all RO/DI supply piping in building):

- Polypropylene/fused joints (research labs)
- PVDF/fused joints (ultra pure applications such as semi)

RO/DI distribution loop return piping:

- Polypropylene/fused joints (research labs and ultra pure applications such as semi)

The A/E shall carefully evaluate piping materials, considering specific project performance requirements. PVC/CPVC piping may be considered for low grade high purity applications.

For RO systems serving clean steam generators, piping may be Sch 80 CPVC/solvent joints. Specify stainless steel piping near clean steam generator connection point due to high temperatures in the vicinity of the generator. Provide a check valve in the make-up line near the connection to the generator.

Controls

Specify a complete, central control panel with the following features:

- Distribution loop supply water resistivity and alarm
- Total RO water produced
- Tank level control
- Distribution pump low pressure alarm light
- Distribution pumps off alarm light (activated only if both distribution pumps are statused" off")
- High storage tank level alarm light (latching, requiring manual reset).
- Low storage tank level alarm light (latching, requiring manual reset).
- Common alarm dry contact, for DDC monitoring. To activate upon any alarm condition above, or any alarm condition occurring on the RO skid.
- Panel on/off switch

Though typically not required, the A/E shall consider if other monitoring and alarm features are appropriate, based on the planned use for the system. Small low grade high purity applications may not require all the control features outlined above.

The RO skid shall utilize a PLC based controller. Specify that the vendor shall provide U-M all software, pass codes, etc. to allow U-M full access to the controller programming and settings, as well as a back-up copy of the project specific program.

Electrical

Do not specify a single point power connection for the system. Instead, indicate power connections to the individual components: Softener, RO Skid, control panel, distribution pumps, etc.

The RO vendor shall be designated as providing combination starters for the RO skid pumps, and VFDs (or combination starters) for the distribution pumps.

Start-up/Certification

The entire distribution loop piping system (supply and return) shall be sanitized (with sodium hypochlorite, similar to sanitizing domestic water systems) prior to putting the system into operation. Mixed beds shall not be connected to the distribution piping during sanitization.

The RO/DI system supplier shall provide technicians specifically trained on RO/DI system start-up, for system start-up.

During start-up, the vendor shall, in the presence of U-M, delete the PLC program and demonstrate reloading the back-up copy of the software program.

All systems shall have performance certified by an independent 3rd party, including the taking of samples. On large systems, multiple samples shall be taken, e.g. one per floor. The first sample shall be taken by dumping the system make-up rate for 24 hours, and then taking a sample at a point of use location designated by the owner. The system shall then be run 1 week, and additional sample(s) shall be taken at point of use locations designated by the owner. Specify that a certified performance report shall be provided to the owner.

DESIGN GUIDELINE 220513
MOTORS

Scope

This sections covers requirements for most motors 200 HP and less. This section does not apply to fire pumps, elevators and sealed refrigeration motors, nor does it apply to small motors with stepped down voltage below 115V.

Related Sections

U-M Master Specification Sections:
220513 - Motors

General

U-M Master Specification Section 220513 Motors shall be used as the basis for the motor specification on all projects. The A/E shall edit (append) the U-M motor specification to make it project specific; however do not generally modify the fundamental motor attributes described in the specification. Turn on hidden text and read all spec. editor's notes when editing the specification.

Phase and Voltage

Motors 1/2 HP and larger should be three phase.

Single phase motors may be rated for 115V, 200V, depending on the application, and building power.

Three phase motors should be rated for 460V wherever possible. Where building power does not include 480V distribution, review options with Project Coordinator and consider adding a step-up transformer, and using 460V motors. The long term objective in most buildings is to have three phase distribution at 480V.

Power distribution system serving large motors (100HP and larger) should be examined to ensure across the line motor starting will not adversely impact the system. Consult Project Coordinator and other appropriate University personnel in these applications.

Three Phase Motor General Requirements

For most applications, including air handlers, motor enclosures for fans and pumps should be Open Drip Proof (ODP) type. For cooling towers and other harsh environments, use Totally Enclosed Fan Cooled (TEFC) motors.

Multiple Speed Motors

With the increased viability of variable speed drives, applications for multiple speed motors are few and far between. Where three phase motors require multiple speeds, there shall be a separate winding for each speed. Coordinate electrical requirements carefully with electrical designer.

Motors for Variable Frequency Drives

Review and verify with both the drive and motor manufactueres the maximum cable length for each drive. Also consider other reuirements such as RFI that may affect the cable length.

Consult manufacture guidelines and provide proper grounding.

For all hospital funded projects, provide AEGIS SGR (Shaft Grounding Ring) for all VFD motors. In addition for motors 100 HP or above, also prove an insulted ceramic bearing assembly on the non-drive end of the motor.

DESIGN GUIDELINE 220514
VARIABLE SPEED DRIVES

Related Sections

U-M Design Guideline Sections:
220513 Motors
220514-H Supplemental Variable Speed Drive Guideline for UMHHC Facilities

U-M Master Specification Sections:
220513 Motors
220514 Variable Speed Drives

Variable Frequency Drive Specifications

U-M Master Specification Section 220514 Variable Speed Drives shall be used as the VFD specification on all projects. Edit U-M VFD spec. 15960 to make it project specific. Turn on hidden text and read all spec. editors notes when editing the specification.

Pay special attention to the following when revising the spec. to make it project specific:

- VFDs used in U-M Hospital and Health Care Facilities may need to be 18 pulse type. Refer to the UMHHC Design Guideline 220514-H, and modify the specification to indicate 18 pulse VFDs when required for UMHHC facilities. See additional discussion on VFD pulse requirements, below.
- Additional editing is not typically required. Do not strike features required by the specification without the consent of the U-M Design Manager. Features listed are typically required for all VFDs, even if not immediately utilized by the subject project.

Pulse, THD, Disconnect, Early Break Contact, and Motor Requirements

U-M's master specification for VFDs requires minimum 6 pulse PWM type VFDs. With the exception of some UMHHC locations, 12 or 18 pulse VFDs are not required provided the VFD complies with all other aspects of the U-M master spec. Therefore do not indiscriminately specify higher pulse VFDs.

The U-M VFD master spec. limits the maximum current total harmonic distortion (THD) to not more than 100% of the VFD input current waveform at any VFD operating speed from 20% to 100%, and requires the manufacturer to provide minimum 3 percent AC line reactors and/or minimum 5 percent DC link reactors. It additionally specifies that if the maximum THD is exceeded, the manufacture shall provide additional line reactors to reduce the THD to within specified limits. *Therefore the AE must include the requirement that each VFD's current and voltage THD be measured in the electrical testing section of Division 16.*

Avoid installing VFDs on the same bus as capacitors or harmonic sensitive equipment.

The U-M VFD spec. 220514 requires all VFDs to include a disconnect switch that is pad-lockable in the open position.

For VFDs that are in sight from the motor, no separate disconnect is required between the VFD and the motor.

For VFDs that are not in sight from the motor, provide a separate disconnect between the VFD and the motor that is in sight of the motor.

Exception for VFDs serving air handlers:

If the VFD is in sight of the door that accesses the air handler section containing the motor, a disconnect is not required between the VFD and the motor. If the VFD is not in sight of that door, provide a disconnect adjacent to the door.

When a common VFD serves multiple direct-drive fan array motors, each motor shall be equipped with a separate disconnect switch. These disconnects shall be located at the door. Alternatively, they can be located in the VFD if in sight of the door, after verifying with the VFD manufacturers that it's practical given project conditions. In all cases maintain proper NEC clearances.

"In sight from the motor" is defined by the National Electrical Code as being visible from and not more than 50 feet from.

When a separate motor disconnect switch is provided, the disconnect shall include automatic "early break" auxiliary contacts that deactivate the VFD whenever the motor disconnect switch is opened. The wiring associated with the early break contacts may be run in the same conduit as the power wiring to the disconnect. Assure the electrical drawings indicate the required early break contact wiring. When a common VFD serves multiple direct-drive fan array motors, early break auxiliary contacts are not required.

U-M requires motors driven by VFDs be inverter duty rated per NEMA MG-1 Part 31.

For insulated motor bearings or shaft grounding brushes, see Design Guideline 220513 Motors for requirements.

Redundancy and VFD Bypass Devices

VFDs serving non-redundant equipment shall be scheduled with a bypass device. Examples:

- A variable volume air handler with a single supply and a single return fan: A bypass device is required on both VFDs.
- A variable volume air handler consisting of (2) supply fans and (2) return fans, each of which is sized to handle 50% of the peak load: A bypass device is required on all (4) VFDs.
- A pump set consists of (3) pumps each sized to handle 50% of the peak load, therefore a fully redundant pump has been included. None of the pump VFDs should be scheduled with a bypass device.

The electrical and mechanical systems associated with the VFD shall be sized and braced to allow the driven system to safely start and operate when the VFD is placed in bypass mode. Provide over pressure protection or similar devices that prevent damage to the driven mechanical equipment and associated components such as duct and pipe, when the motor is operated (full speed) across-the-line via the bypass device.

Although rarely required, evaluate the need to provide an automatic bypass feature that automatically connects the motor directly across the line if the VFD faults or fails. When an automatic bypass is provided, motor overload protection, run permissive, and safety circuits shall remain active with the VFD in automatic bypass.

General Design and Design Document Requirements

When a piece of equipment or a system includes multiple motors (e.g. an AHU with a supply and a return fan), provide a VFD for each motor. Controlling multiple motors with the same VFD is discouraged; exceptions may be made when a common VFD serves multiple direct-drive fan array motors. Consult with the U-M Design Manager.

The AE shall schedule the VFDs on the mechanical drawings. The following minimum information shall be indicated in the schedule: Equipment Served, Horsepower, Voltage, Short Circuit Current Rating, Input Signal (typically 4-20 mA), Bypass Device Y/N, Emergency Power Y/N.

U-M's normal convention is to have the mechanical trade furnish the VFD and the electrical trade install the VFD.

VFDs should be located indoors and as close to the driven motor as practical.

VFDs are considered motor controllers by the NEC. Do not locate piping or ductwork directly above the VFD. Maintain proper NEC clearances in front of the VFD panel, typically 42" deep.

VFDs may be mounted on walls or may be free standing. Free standing units shall be designated as mounted on a Unistrut style rack. VFDs shall not be mounted on the housings of mechanical equipment.

DESIGN GUIDELINE 220519
THERMOMETERS AND PRESSURE GAUGES

Scope

Requirements for thermometers and pressure gauges.

Related Sections

U-M Master Specification:
220519 - Thermometers, Pressure Gauges, and Accessories

Standard Details:
15130001 - Thermometer Installation Detail
15130002 - Pressure Gauge Detail

Design and Application Requirements

U-M Master Specification Section 22 0519 shall be used as the basis for thermometer and pressure gauge specifications on projects, with the exception of fire protection. This specification contains the minimum requirements for thermometers and pressure gauges at U-M. Project specific requirements may dictate devices with additional features, higher pressure/temperature ratings, etc. The A/E shall therefore edit the U-M specification to make it project specific. Turn on hidden text and read all spec. editor's notes when editing the specification.

Mercury thermometers are not to be used.

Single pressure gauges should be used across pumps and strainers, piped so that suction/discharge- upstream/downstream pressures can be read separately.

Installation Requirements

The A/E shall show on the drawings or details the locations of all thermometers and gauges.

DESIGN GUIDELINE 220523
VALVES

Scope

Valves for fire protection, plumbing, steam and hydronic service.

Related Sections

U-M Master Specification Sections:
220523 Valves

Design and Application Requirements

General

U-M Master Specification Section 22 0523 shall be used as the basis for valve specifications on projects, with the exception of valves for fire protection. This specification contains the minimum requirements for valves at U-M. Project specific requirements may dictate valves with additional features, higher pressure/temperature ratings, etc. The A/E shall therefore edit the U-M valve specification to make it project specific. While many valve service types are covered in the specification, not all are included. Add to the specification , service types not included, as required for the project. Turn on hidden text and read all spec. editor's notes when editing the specification.

Valves shall be specified with seats, stem seals and disc materials compatible for intended fluid, temperature, pressure and service. Valve pressure and temperature ratings shall be specified to meet or exceed those of the system in which they are installed.

Strainer blow-down valves shall be quarter turn ball valves.

Fire Protection

Valves for use in fire protection systems shall be FM approved.

Potable Water Systems

Valves in city water mains exterior to the building shall comply with City of Ann Arbor requirements.

DESIGN GUIDELINE 220553
MECHANICAL IDENTIFICATION AND PAINTING

Scope

Requirements for identification and painting of mechanical piping, ductwork and equipment, underground pipe identification, valve tags, and labeling architectural access panels; including corresponding labeling requirements on design drawings.

Related Sections

U-M Design Guideline Sections:

U-M Master Specification Sections:

220553 Mechanical Identification

U-M Standard Details:

Reference Documents:

General

U-M Master Specification 220553 shall be used as the basis for the specification covering the identification requirements of piping, ductwork and equipment. The master specification reflects U-M's basic requirements for mechanical identification. It includes the required label size, nomenclature, color, mounting interval, etc. Revise the master specification only as required to make it project specific, e.g. to add a new pipe system type as opposed to revising the label nomenclature already indicated.

Pipe and duct on drawings should be labeled to match the respective drawing identification nomenclature indicated in the U-M master specification.

The U-M master spec. also includes U-M's requirements for underground pipe identification, valve tags, and labeling architectural access panels.

Editor's notes are included in the specification to assist the A/E. Be sure to turn on hidden text and read those notes.

Equipment Identification

During design phase, A/E shall assign equipment numbers to be used in the construction documents, in conjunction with the Project Coordinator.

Numbers for major mechanical equipment such as air handlers, chillers and pumps should be unique within a building and continue the sequence established by existing equipment. As an example, if air handlers AC-1, AC-2 and AC-3 already exist, then a new air handler should be named AC-4 (not AC-1 or AHU-4 or ACU-4). Although many equipment designators are

presently used throughout the University, the A/E shall use the designators listed in the equipment marker section of the U-M master specification whenever possible. Where the first equipment item on a project is not named "..-1", the equipment schedule should note that all the equipment with names preceding it are existing.

All small equipment intended to appear on test and balance reports, including VAV boxes, shall be identified on design drawings with a unique number. Field labeling may not be required for small equipment not listed in U-M Master Specification 220553. Consult with the U-M Design Manager.

Valve Identification

Generally all valves and regulators on all systems, except those located directly at the equipment served, shall be provided with 1-1/2 inch diameter brass tags with stamped numbers and letters. Exact valve tag requirements are described in the U-M master specification *except the A/E must edit the specification to identify which systems are to be tagged*.

Special use valves shall be numbered on the design drawings, e.g. control valves.

The contractor shall develop a directory of valve tags, to be wall mounted and included in the O&M manual, as described in the U-M master specification.

Painting

Interior pipes and ducts are not typically painted, unless required in certain locations for aesthetic reasons, as confirmed by the U-M Design Manager. Exceptions include:

- Fire protection piping in exposed locations shall be painted red
- Pipes in the Central Power Plant. Consult with the U-M Design Manager for specifics.

Exterior uninsulated pipe and ductwork shall be painted the same color as the background building, or a complementary color as directed by the U-M Design Manager. Insulated pipe and ductwork normally does not require painting, provided the insulation material does not require paint for protection. However, review the visibility of insulated pipe and duct with the U-M Design Manager to determine if painting for aesthetic reasons is appropriate.

DESIGN GUIDELINE 220719
MECHANICAL INSULATION

General

Insulation of pipe and duct systems to avoid condensation or to provide personnel protection is required. Cost-benefit analysis and ASHRAE 90A should be used to determine which additional systems should be insulated and the appropriate insulation thickness. A continuous vapor barrier jacket must be provided when condensation is possible. This normally means that hangers and riser clamps may not be in contact with the piping. Insulation of the complete system, including air separators, suction diffusers, chilled water pump casings, shot feeder, airflow measuring stations, etc., is required when condensation is possible.

For normal maintenance and inspection activities, insulation should be segmented for removal without damage to adjacent insulation.

Insulation exposed to outside shall be a weather resistant system, with durable, UV stable, waterproof finish.

Insulation exposed to high physical abuse, such as piping near the floors which is regularly walked over, shall be adequately protected with pre-molded, heavy gage, PVC covers, reinforcing shields, catwalks etc., to ensure the long-term integrity of the insulation system.

Insulation materials should meet applicable requirements of NFPA 90A, and MICA/ NIAC "National Commercial and Industrial Insulation Standards".

Related Sections

U-M Design Guideline Sections:
Codes and Regulatory Agencies

U-M Master Specification Sections:
Section 220553 - Mechanical Identification
Section 221113 - Piping Materials and Methods

Piping Insulation Materials Requirements

General

Fiberglass pipe insulation shall be rigid, pre-molded to size of piping on which it is used.

Indoor Piping

For "hot piping" carrying fluids at 110F and above: Insulate pipe and fittings (excluding unions and valves) using fiberglass insulation with ASJ (all service jacket, with integral vapor

barrier). Closed cell expanded foam insulation (similar to Armaflex) may be used on domestic hot water piping.

For "cold piping" carrying fluids below 70F: Insulate pipe, fitting, valves, unions, flanges and all cold surfaces using fiberglass (with ASJ), or closed cell expanded foam. Ensure all cold surfaces are insulated, and that continuity of vapor barrier is maintained.

Piping carrying fluids between 70F and 110F does not require insulation. Condenser water piping should be considered "cold piping" if used for free cooling.

Indoor pipe insulation can be presized rigid board fiberglass with paintable jacket. Exposed insulation in finished areas should be painted as described in Section 220553.

Tunnel Piping

Piping insulation in tunnels shall include dimpled aluminum jacketing.

Outdoor Piping

For outdoor piping, use insulating materials similar to those stated for indoor use, but add aluminum jacket for fiberglass insulation and premium quality weather resistant coating for expanded foam insulation.

Outdoor compressed air piping should be heat traced and insulated if piping is in service during the winter and if the pressure dew-point is above minus 20F.

Underground Piping

For hot piping (carrying fluid above 110F), a carrier pipe inside a steel or fiberglass jacket pipe, with foam insulation between, is preferred.

Chilled water piping is typically run as uninsulated ductile iron pipe. If ductile iron pipe is not used, consider a carrier pipe inside a PVC jacket with expanded urethane insulation between.

Refer to Section 221113 for pipe material requirements.

Ductwork Insulation Material Requirements

General

Acoustic duct lining should not be used unless part of a double wall duct system with a mylar barrier between the inner duct wall and liner face.

Indoor Ductwork

Indoor ductwork in concealed areas (above ceilings and in closed shafts), may be insulated with blanket type fiberglass insulation with jacket.

Indoor ductwork in exposed areas (such as mechanical rooms, labs with exposed ceilings etc.) should be insulated using rigid board fiberglass with paintable jacket. See Section 220553 for painting requirements.

Particular attention shall be paid to "cold ductwork" to ensure duct supports will not cause condensation.

Exhaust duct shall not be insulated.

Need for insulation on return air ductwork should be evaluated based on air stream and ambient conditions. Typically, air conditioned return duct in unconditioned mechanical rooms should be insulated.

Outdoor Ductwork

Outdoor duct insulation should be high density foam plastic, or rigid fiberglass, mastic sealed and painted with weather resistant finish.

Underground Ductwork

Requirements should be reviewed on a case by case basis with Project Coordinator

Equipment Insulation

Insulate all cold equipment to prevent condensation for the following:

- Chilled water pumps
- Chiller shells and water boxes

Insulate hot equipment as required for personnel protection and on the following equipment:

- Domestic hot water storage tanks
- Large condensate receivers

Installation Requirements

Insulation at joints should not be applied until after pipe, duct and equipment have been final installed, tested, cleaned, and inspected.

All exposed edges of insulation shall be sealed.

DESIGN GUIDELINE 221113
BASIC PIPING MATERIALS AND METHODS

General

In general, follow the guidelines below when designing and specifying pipe, pipe fittings, and accessories. Unless specifically indicated otherwise, these guidelines are not intended to restrict or replace professional judgment. Piping materials shall be compatible with systems served.

Related Sections

U-M Design Guideline Sections:
Division 2 - Sitework
210000 - Fire Protection
220020 - High Purity Water Systems
220719 - Mechanical Insulation
SBA 5.9 -Tunnels

U-M Master Specification Sections:
Division 2 - Sitework
211313 - Wet Pipe Sprinkler Systems
221113 - Basic Piping Materials and Methods
232116 - Hydronic Piping Specialties
232216 - Steam and Condensate Piping Specialties
232300 - Refrigerant Piping

Ductile Iron Pressure Pipe Inside Buildings

In all cases, ductile iron pressure pipe running inside buildings shall be equipped with retrained joints. This includes new construction and renovation work.

Ductile iron pressure pipe should normally not be run inside buildings. A typical case when this is unavoidable is underground domestic, fire protection, or chilled water ductile iron pipe connecting to the associated building piping system. The transition between the underground ductile iron pressure pipe and the building pipe shall be accomplished with a flange located inside the building.

- For new installations, specify that the termination of the ductile iron pipe (and any ductile iron joint inside the building) be factory threaded and equipped with a screw-on, machine tightened, ductile iron flange that complies with ANSI/AWWA C110 and C115, similar to that available from American Ductile Iron Pipe, US Pipe, and others.

For existing buildings with unrestrained plain end or mechanical joint ductile iron piping, replace with restrained flange adapters with actuating screws that break off when tightened to

the proper torque, such as EBAA Iron Incorporated MEGAFLANGE Series 2100. Do not specify restrained flange adapters that do not incorporate break-off actuating screws.

General Material Requirements

Refer to U-M Master Specification for piping and accessory materials and installation requirements, including: Drainage and Vent Piping, Pressurized Plumbing Piping, Hydronic and Steam Piping, Eccentric Fittings, Tees in Welded Pipe, Solder in Copper Piping Joints, Dielectric Protection, Flanges, and Unions – previously addressed in this section. In all cases, pipe materials and accessories must be compatible with systems served (pressure, temperature, corrosion resistance). Master specifications contain extensive hidden text for the specification editor to guide decision making process. Where U-M Master Specifications are used, edit and customize on a project specific basis. Note that only the more typical piping applications are covered in the U-M master specification; assure every pipe application specific to the project is specified. Additional clarification is included in paragraphs that follow.

Mechanical Piping Material Requirements

Refer to U-M Master Specification Sections for details of piping material requirements. Clarifications and exceptions are noted below.

Domestic Cold Water and Hot Water

Domestic Hot Water piping installed in the central campus tunnel system shall use exclusively Victaulic grooved copper pipe and fittings.

Storm and Sanitary Waste and Vent Piping

Vent piping shall be the same as waste piping.

Master specification includes both cast iron and PVC piping. Use cast iron unless specifically instructed by U-M Design Manager to use PVC. While PVC may have some appropriate applications in small projects, there can be smoke/fire related problems with using PVC.

Laboratory Waste and Vent Piping

For most chemistry and biology labs, dumping of acids and other corrosive chemicals is prohibited. As such the waste stream is generally dilute, within Ph limits suitable for discharge to city sanitary sewers. Therefore, in most cases, neutralization pits are not required. Confirm design philosophy on lab waste system with U-M Design Manager.

For general lab applications, above ground lab waste piping is typically specified as corrosion resistant polypropylene, Schedule 40. Joints may be mechanical type or fuse-sealed, depending on application. For new lab buildings, or renovations with extensive new drainage networks, fused joints should normally be specified. Consult U-M Design Manager. Fused joints are generally less prone to developing leaks, but may be more expensive. All sink P-traps shall be of the same material as the waste pipe, and include mechanical fittings for ease of maintenance.

Underground piping shall be polypropylene, Schedule 80. Joints shall be fused type. Consult U-M Design Manager. Double walled underground piping is not generally required.

Alternate piping material shall be considered on a case-by-case basis where high temperature waste or other factors may be present. High silicon cast iron may be considered if the application warrants the added expense. Glass piping may be considered where high temperature waste is present.

High Purity Water Piping

Design piping system to meet project specific requirements. Some applications can use PVC piping (humidifiers), while others require polypropylene (most labs). Consult U-M Design Guideline 220020 – High Purity Water Systems for detailed requirements.

Vacuum Piping

Provide a plugged cross at all turns greater than 45 degrees, slope in the direction of flow and provide hose end drain valves at all low points for cleaning the system.

Chilled Water Piping

Large underground piping should generally be uninsulated ductile iron (Class 52 with Polyethylene wrap). For small piping, consider alternate materials and need for insulation.

Hot Water Heating Piping

Underground piping shall be installed using a preinsulated piping system. Carrier pipe shall match above ground piping. Jacket pipe shall be minimum 10 gauge steel, with butt welded fittings, and a fiberglass reinforced urethane elastomeric coating. Refer to section 220719 for insulation requirements.

(Steam) Condensate Piping

Underground condensate (from steam) piping shall be schedule 80 black steel with extra heavy fittings in a preinsulated system as described for underground hot water heating piping. Condensate piping shall not be run in common jacket pipe with other carrier pipes, unless specifically approved by U-M Design Manager and Utilities Department. Generally, two underground condensate lines are installed – one spare for future use.

Condenser Water Piping

U-M is presently considering non-ferrous (stainless steel, fiberglass, ABS) piping alternatives for improved water quality. Preliminary analysis indicates that non-ferrous piping may be justifiable, especially in applications where the cooling tower is drained seasonally, and where piping is not heat traced and insulated. Schedule 10 stainless steel condenser water piping has been used on some projects. Consult U-M Design Manager.

Underground condenser water piping shall be ductile iron.

Steam Piping

Underground steam piping up to 125 psig shall be Schedule 40 black steel with butt welded fittings, in a pre-insulated system as described for underground hot water heating piping.

Civil Pipe Material Requirements

Generally, underground piping 5 feet or more from building exterior walls is considered to be "Civil Piping". The following piping materials apply to Civil piping only, and may indicate that a change in pipe material takes place at this point. Refer to Tab 2 - Sitework for additional requirements.

Storm Sewer

Shall be reinforced concrete pipe (RCP), ASTM C-76, Class IV, with rubber gasketed joints, ASTM C-443, or High Density Polyethylene with rubber gasketed joints. For small projects with piping limited to 6" and 8", Schedule 80 PVC pipe may be used.

Sanitary Sewer

Shall be extra strength vitrified clay pipe (VCP) with O-ring joints. Sewers 15" and larger shall be reinforced concrete pipe (RCP), ASTM C-76, Class IV, with rubber gasketed joints, ASTM C-443

City Water Mains (for domestic water and fire protection)

Shall be Ductile Iron Class 52 with Polyethylene wrap.

Under Drainage Tubing

Shall be corrugated polyethylene tubing (AASHTO M 252) or corrugated polyvinylchloride tubing (ASTM F 800, with holes conforming to (AASHTO M 252)

Lawn Sprinkler Piping

Coordinate irrigation system design (including sizing water main, backflow preventer, and water meter) and installation with the University Landscape Architects Office and the U-M Plumbing shop, via the U-M Design Manager.

Pipe Hangers and Supports

Refer to U-M Standard Details, U-M Master Specification 230000 for additional hanger and support requirements previously addressed in Design Guideline Section 221113. Refer to Design Guideline Section 230000 for building attachment requirements previously included in this section.

Prior to beginning design, A/E shall review building design and construction and design suitable building attachment and pipe support and anchoring system, verifying that the existing building structure can support new piping loads.

The A/E shall include the following in piping designs:

- Pipe hanger details, including components, hanger spacing.
- Pipe hanger systems that accounts for thermal expansion of piping.
- Details of building attachments, including clarifying when support of piping from concrete slab using expansion anchors is acceptable. "C" type clamp hangers are acceptable for fire protection piping and all piping 2" and smaller when retaining clips are used.
- For large piping or where the design otherwise impacts the integrity of the building structure, indicate locations of all pipe hangers.
- For existing buildings with concrete floors, determine the extent to which vertical drill-in or similar type inserts can be used, and delineate any limitations regarding their use in the specifications. Many older buildings may not have sufficient floor thickness or integrity to allow the use of such inserts.
- Indicate locations and details of pipe anchors, guides and expansion joints or bends.

A/E shall include the following in the Project OPR/BOD document:

- Pipe expansion and stress calculations for hot pipes (120°F and above), 6" and larger. Show compliance with ANSI piping codes.

Large piping and equipment shall be independently supported from building structure, not from roof decks, etc. All piping shall be directly supported from the building, not from other piping, ductwork or equipment.

Dissimilar metal-to-metal contact between pipe and hanger is prohibited. Specify isolators, such as plastic coated hangers for copper pipe, to avoid dissimilar metal-to-metal contact between pipe and hanger.

Hangers for piping that lacks rigidity, such as polypropylene pipe, shall be spaced, as a minimum, as recommended by the manufacturer or preferably, with a continuous support. Since the spacing is typically much closer than for other piping materials, the designer must pay close attention to the implications on the design.

For cold piping systems, design piping hangers to retain integrity of vapor barriers. Specify cal-sil or similar pre-formed inserts and insulation shields for all piping 4" to 12" requiring a vapor barrier (wood blocking is not acceptable). Insulation shields are acceptable for piping 3" and below.

Design for Thermal Expansion:

Account for thermal expansion when designing pipe hangers and supports. Where space allows, expansion bends fabricated from standard piping are preferred over expansion joints.

For Expansion Design Requirements for steam in tunnels, see U-M Design Guideline SBA-H.

For steam tunnels, on low pressure steam (LPS), externally pressurized bellows type expansion joint shall be used. For low pressure condensate (LPC), use externally pressurized bellows type expansion joint or equal expansion bellows type expansion joint. For domestic hot water

(DHW), use equal expansion type bellows joints with all Stainless steel construction (no carbon steel on wetted parts). Refer to U-M Master Specification 220516 – Pipe Expansion Joints.

Pipe Hanger Submittals

A/E shall require that the Contractor submit the following for A/E review and approval:

- Type and model for all manufactured pipe support components, including building attachments, hangers, insulation saddles and shields, expansion joints, anchors.
- Locations of anchors, expansion bends and joints.
- Locations of building attachments where deemed necessary by A/E.
- Details and supporting calculation of additional supports.

A/E shall review contractor's hanger support shop drawings and details to verify that unacceptable pipe movement during all phases of operation of the system (start-up, sudden gpm changes, or shutdown) will not occur.

Pipe Hanger Shields and Preinsulated Pipe Supports

Pipe shields and preinsulated pipe supports shall be used to protect piping insulation and vapor barrier (for cold piping) as described below.

- Horizontal Cold Piping (CHWS/R, CW) sizes 2" and less:
  Provide galvanized insulation protection shields under 180 degrees of piping, between hangers and pipe insulation.
- Horizontal Cold Piping (CHWS/R, CW) sizes 2 1/2 and over:
  Provide 360 degree preinsulated welded pipe shields between piping and hanger.
- For all Cold Piping Vertical Risers:
  Provide preinsulated riser clamps.
- For Hot Piping:
  Account for thermal expansion when designing pipe supports and shields. Where suitable install hangers directly on the pipe and bury hanger in insulation. Where necessary, install pipe saddle on pipe, preinsulated pipe shield or galvanized insulation protection shield.

Pipe Penetrations and Sleeves

Provide pipe sleeves where required, including the following locations:

- Where required by code
- Where required as part of rated penetration, to maintain fire and smoke rating
- To support vertical piping (to support riser clamps).
- Where required to maintain water seal and prevent water penetration.
- Where pipe movement is anticipated (especially due to thermal expansion) at the penetration.

Fire Protection Piping, Compressed Air and other uninsulated piping: Sleeves are generally not required, unless required to maintain integrity of rated walls.

Chilled Water and Cold Water: Sleeves are generally required for all piping 2" and larger penetrating walls and floors.

Steam, Condensate, Heating Hot Water, and other hot insulated piping: Sleeves are required for all piping in walls and floors.

For underground exterior wall penetrations, piping penetrations must be watertight. For new construction, provide cast-in-place pipe sleeve with integral water-stop, oversized for use of linkseal between piping and sleeve. In existing concrete, where concrete can be core drilled and properly sealed with a linkseal, a sleeve may not be required.

For renovation work with existing concrete floors or for new floors where cast-in-place sleeves were not installed, pipes penetrating above grade floors typically require "double core" sleeves, especially in areas where floors are likely to get wet, and where water leaks to floors below would be disruptive to operations. Piping in stairwells does not require floor sleeves.

Include appropriate, project specific penetration and sleeve details for all conditions. Refer to U-M details, and customize as required.

Pipe Pressure Testing Requirements

Include pressure testing requirements in the project specifications or on the project drawings. U-M Standard Detail 221113 – Basic Piping Materials and Methods indicates typical pressure testing requirements and may be used provided it is revised to reflect project specific requirements.

For each system pressure tested, require that a test report be provided using owner furnished forms, certifying that the system was satisfactorily tested and passed.

Flushing and Cleaning of Piping Systems

At minimum, the A/E shall include the flushing and cleaning requirements found in Part 3 of U-M Master Specification 221113 – Basic Piping Materials and Methods. Refer to the spec. editors notes in U-M Master Specification 221113 for additional information.

Dye Testing Requirements for Storm and Sanitary Piping

Dye testing is required on most new connections to new and existing storm and sanitary waste piping. Refer to Master Specification Section 221113 (including hidden notes) and OSEH Dye Testing Guidelines for Storm Water & Sanitary Systems.

Where practical, dye testing of underground piping should be done during design phase to validate that the design is in compliance with effluent discharge codes and regulatory requirements. Special attention should be paid to mechanical room floor drains and cooling

tower overflow drains, both of which are now required to be routed to sanitary waste. Testing may also require services of the U-M Plumbing Shop. Coordinate with U-M Design Manager.

Require construction phase dye testing by the contractor, after final connection is made, and before system is put into service. See the U-M Master Specification Section 221113 for additional guidance. To facilitate efficient and effective testing, indicate location of appropriate validation points on plans. This is typically the first manhole outside the building.

DESIGN GUIDELINE 230000
BASIC MECHANICAL REQUIREMENTS

General

Within the scope defined by the Program Documents, perform the project mechanical design work and produce the project mechanical construction documents in accordance with these Design Guidelines.

Related Sections

Codes and Regulatory Agencies

Design Requirements - Codes and Standards

In addition to the **Codes** listed in section "Codes and Regulatory Agencies", the following **Standards** apply to mechanical projects. Use most current update. Where these **Standards** conflict with related **Codes, Code** shall take precedence.

- State of Michigan Fire Marshal Division, "Fire Damper Clarification".
- NFPA 101, "Safety to Life from Fire in Buildings and Structures".
- NFPA 90A, Installation of Air Conditioning and Ventilating Systems.
- SMACNA HVAC Duct Construction Standards - Metal and Flexible.
- Factory Mutual loss prevention data sheets.
- NFPA 13 "Installation of Sprinkler Systems".
- ANSI/ASHRAE/IES 90A Energy Standard.
- ANSI/ASHRAE/IES 100.5 Energy Standard.
- AABC National Standards for Total System Balance.
- ACGIH Industrial Ventilation.
- ASHRAE Handbook - Fundamentals, Equipment, HVAC Systems and Applications, Refrigeration.
- ASHRAE 62 Ventilation for Acceptable Indoor Air Quality.
- SMACNA - HVAC Testing, Adjusting and Balancing.
- NEBB - Procedural Standard for Testing, Adjusting and Balancing of Environmental Systems.
- AWS D 9.1 - Welding of Sheet Metal.
- AMCA - Standards, Definitions, Terms and Test Codes for Louvers, Dampers and Shutters.
- NFPA 14 - Standpipe and Hose Systems.
- Michigan Occupational Safety and Health Act.

The enforcing authority is the University of Michigan.

Design Requirements - Future Growth, Spare Capacity, Existing Conditions

When designing new installations, consider providing spare capacity for future growth. When designing renovations to existing installations, verify the existence of spare capacity before utilizing it for the new loads. Also field verify existing conditions - do not assume that existing design drawings are complete or accurate.

Design Requirements - Maintenance Accessibility

Locate equipment requiring maintenance so that it is easily accessible. Avoid installations that require the use of lifts or scaffolding, or the removal of other equipment for routine maintenance. Provide access doors to all maintainable equipment located behind walls or above permanent ceilings.

Preferred Manufacturers List

The University (Facilities Planning and Design) maintains a "Mechanical Trades Preferred Manufacturers List" (PML). This list is updated regularly, generally in February and August. The A/E shall use this list in developing construction document specifications. Obtain a current copy from the University Project Coordinator. This list is also available through this website.

Where specific manufacturers are specified in U-M AEC specifications other manufacturers listed in the PML may be added provided a model with similar quality exists, subject to the approval of the U-M Design Manager.

Demolition Requirements

To maximum extent feasible, remove abandoned branch piping and ductwork back to risers/mains. Remove abandoned conduit and equipment.

The A/E must caution the Contractor that all shutdowns of systems serving occupied spaces outside the area of this project shall be absolutely minimized. This will require that, for example, branch duct runs shall be capped and sealed at the time of partial duct removal to allow use of the remaining duct system until the new ducts are installed. Temporarily rebalance if pressure relationships are critical. Ducts cannot be left open unless the entire system can be taken out of service throughout the full construction period.

Other systems which are presently operating that are to be abandoned, as well as those previously abandoned should be removed.

Operating and Maintenance Instruction Manuals

Four sets of **job specific** operating and maintenance (O&M) manuals shall be provided for each project. These manuals shall be collected in indexed three ring binders and contain manufacturer's operating and maintenance literature for every equipment item furnished for

the project. Typical wiring or piping schematics are NOT acceptable; they must reflect the actual furnished equipment, including all options and interfaces with other equipment or systems. O&M manuals shall include a steam trap inventory with individual trap identification, service, manufacturer and model.

A single copy of each **job specific** O&M manual shall be submitted immediately after all shop drawings have been approved. This copy will be reviewed by the A/E and University personnel, then sent back to the contractor for corrections. All four corrected copies must be received by the University two weeks prior to any scheduled training.

Drawing Requirements

The amount of outdoor air for each air handling system must be shown on the equipment schedules.

Prepare the following mechanical drawings (as applicable to the project) for use during construction:

- Demolition plans and details
- Plumbing plans, including underground (within 5 feet of the building)
- Piping plans and details, including all utility meter locations
- HVAC plans and details
- Mechanical room layouts showing free space required for maintenance
- Plumbing, piping (including specialty gases) and HVAC (SA, RA, EA) risers

The drawing shall be of high quality in accordance with the Construction Documents Section of the Special Instructions to Designers.

Shop Drawings and Air/Water Test and Balance Reports

The University will retain three copies of all such submittals and the A/E will retain one copy. Therefore, the Contractor will be required to submit four copies of all such submittals plus however many copies he wishes to retain.

Access for Maintenance Operations

Add access hatches as required to service valves, dampers, coils, VAV boxes and mechanical equipment.

Structural Supports

All supports for piping and equipment shall be selected so that deflection caused by the load does not exceed 1/240th of the span.

Dust Protection

All mechanical and electrical equipment shall be protected from construction dust. Before start-up, motors must be covered or enclosed in a dust free manner. After start-up the surrounding area must be kept as dust free as possible by regular and frequent cleaning, dust control compound etc.

DESIGN GUIDELINE 230010
HVAC DESIGN

Scope

General requirements for HVAC design including zoning, design weather data, temperature and humidity, acoustics, and ventilation.

Related Sections

U-M Design Guideline Sections:
SID 2.1 - Owner's Project Requirements and Basis of Design Documents

Definitions

Zone: A group of one or more spaces having a single thermostatic control.

HVAC Zoning

Normal zoning for offices and office like spaces at the University of Michigan shall be:

- Exterior Spaces: Two spaces per thermostatic control zone.
- Interior Spaces: Four spaces per thermostatic control zone.

However, zoning for these as well as all other space types shall be configured to assure that the required temperature and humidity control ranges are attained.

Conference rooms and spaces on corner building exposures should be on a separate zone.

When establishing zones the following shall be considered:

- Similarity of sensible and latent loads
- Occupancy
- Occupant transiency
- Space type, e.g. lab, open office, class room, etc.
- Exterior exposure location/number of exterior exposures
- Allowable temperature and humidity range
- Impact of zoning on potential energy conservation opportunities
- Energy code requirements
- LEED credits

This is not a comprehensive list. The A/E shall determine the considerations specific to the project and design the zoning accordingly.

Mechanical System Design Criteria

Determine project specific temperature, humidity, air change rate, cleanliness, acoustic, and other design criteria for each space by consulting with the User and the U-M Design Manager. Indoor and outdoor design criteria shall be stated in the Owner's Project Requirements/Basis of Design Documents (OPR/BOD). When no OPR/BOD is planned, indicate this information on the drawings (first sheet of the applicable section).

Outdoor Air Design Conditions (Summer: ASHRAE Detroit Willow Run airport data)

HVAC Winter: Negative 10F & 0% RH

HVAC Summer: 87.9F DB / 72.7F WB (ASHRAE 1%) for lab/research areas
84.5F DB / 70.9F WB (ASHRAE 2.0%) for office/classrooms

Cooling Towers: 95F DB / 78F WB

Dehumidification (critical spaces): Select 0.4% or 1% ASHRAE dehumidification data in consultation with the U-M Design Manager.

Typical Indoor Design Conditions - Acoustics

Class/Meeting	rooms:	NC/RC	30
Offices/Labs:		NC/RC	40

Labs with Fume Hoods: NC/RC 50

Indoor Air Temperature and Humidity

Design projects to produce acceptable indoor comfort. Consider the design application, all HVAC loads, as well as initial and operating costs of various alternatives. To minimize cold drafts, provide new and existing buildings with perimeter radiation heat unless this requirement is specifically waived by the University Design Manager. At the same time, consider optimization of building skin to allow perimeter heat to be eliminated without compromising comfort.

Humidification is generally required, except where specifically waived by the University Design Manager. Criteria must be carefully selected to balance human comfort with building skin integrity. General winter humidification criteria: 30% RH. Central power plant steam contains amines; when used for direct injection humidification this may be objectionable in some cases. For office and other areas with relatively low outside air requirements a "clean steam" humidification system may be appropriate. Clean steam typically consists of a steam to steam heat exchanger with RO make-up water. In lab areas and other high outside air environments, direct steam is often acceptable. Consult with the User and the University Design Manager early in the design phase to clarify project specific humidification requirements.

Typical Space Design Criteria

(These are the minimum performance levels the HVAC system shall be designed to achieve when the User or the U-M Design Manager is unable to provide specific requirements):

Office/Classrooms/Labs

Summer: 75F maximum dbt, 60% maximum RH

Winter: 72F minimum dbt, 30 % minimum RH

Typical Space Set Points

The following set points shall be indicated on the project control drawings when the User or the U-M Design Manager is unable to provide specific requirements for a space:

Office/ Classrooms/Labs:

Heating Setpoint: 71°F

Cooling Setpoint: 76°F

Throttling Range (DDC controls): minus 1°F heating, +1°F cooling.

Dead Band (minimum): 5°F

Ventilation

Provide designs that comply with the Michigan Mechanical Code (MMC) and with the latest edition of ASHRAE 62.1 Ventilation for Acceptable Indoor Air Quality. However, the natural ventilation requirements of the MMC shall govern over the requirements found in ASHRAE 62.1. The natural ventilation approach shall typically be limited to dormitories.

For any air handling system exceeding 5000 CFM that has multiple recirculation paths, use the Appendix A approach of ASHRAE 62.1 to optimize the System Ventilation Efficiency to adjust the required system outdoor air rate to the point which provides the lowest over-all energy cost. This is most easily accomplished using energy modeling software such as Carrier Hourly Analysis Program.

DESIGN GUIDELINE 230011
FANS AND ACCESSORIES

Scope

Fans and accessories. Fan arrays.

Related Sections

U-M Design Guideline Sections:
220514 Variable Speed Drives
230013 Air Handling Units

U-M Master Specification Sections:
233400 - Fans

General

U-M Master Specification Section 233400 - Fans shall be used as the basis for fan specifications on all projects. The A/E shall edit the U-M fan specification to make it project specific. While many fan types are covered by this specification, not all fan types are included. Turn on hidden text and read all spec. editor's notes when editing the specification.

Direct drive fans are preferred for fans driven by variable frequency drives.

Limit belt driven fan speeds to approximately 1400 RPM.

Limit direct drive fan speeds to approximately 2700 RPM. However, it is strongly preferred that fan speeds not exceed 1800 RPM.

Forward curved fans shall not be specified accept when air foil or backward inclined fans are unavailable, or when a forward curved fan provides significant performance advantages. Modular air handlers are often available with either forward curved or backward inclined/air foil fans. If backward/air foil type are available specify that type, except as qualified above.

For plenum fans, the impacts on fan performance from any inlet mounted back draft dampers shall be compensated for when selecting such fans. Backdraft dampers should be actuator driven.

Extended lube lines shall be specified where bearings are difficult to access or for units providing service to areas that might be compromised by opening an access door for bearing lubrication, e.g. clean room units, lab units with stringent temperature, pressure, or humidity controls, etc.

Fan Arrays

Fan arrays are not preferred except when space or redundancy requirements demand them. Each fan in an array requires a separate motor overload, and each fan should typically have a separate electrical disconnect. Refer to Design Guideline 220514 for additional requirements related to variable frequency drives. Typically additional air flow stations and controls are required. This all adds to complexity, cost, and maintenance. Fan arrays of more than 4 fans in particular are not preferred since they typically use more fan energy and do not save space when maintenance clearance requirements are considered. Therefore the A/E shall provide an analysis comparing the energy use, space savings, and any other benefit that results from various fan quantities, for any fan array system proposed to use more than 2 fans. This analysis shall include the impact of fan and motor efficiency differences between the various alternatives, as well as the cost for additional disconnects, fan motor overloads, air flow stations, controls, etc. .

Fan speeds in fan arrays should be limited to the range indicated for direct drive fans, above.

Each fan in a fan array should be equipped with its own variable frequency drive. Controlling multiple fans off the same VFD is discouraged and shall be approved by the U-M Design Manager. If multiple fans are controlled by a common VFD, provide a separate electrical disconnect for each fan. In such cases, early break contacts may be omitted from the individual fan disconnects.

Equipment Room Exhaust Fans

A single fan in the exhaust duct is preferred, provided the negative static pressure at the equipment room remains within reason. For rooms deep in the building, both supply and exhaust fans will be required.

DESIGN GUIDELINE 230012
AIR FILTERS

Scope

This Design Guideline covers air filters for general HVAC use. It does not pertain to clean rooms or other spaces requiring High Efficiency Particulate Air Filters, or filters in laboratory equipment such as bio-safety cabinets. It does not cover specialty filter requirements that may be required for a specific project.

Related Sections

U-M Design Guideline Sections:
230013 - Air Handling Units

U-M Master Specification Sections:
234000 - HVAC Air Cleaning Devices

General

Filters shall be specified using U-M master specification 234000 - HVAC Air Cleaning Devices. Edit this specification section to make it project specific. Turn on hidden text and read all spec. editor's notes when editing specifications.

Air filters shall be scheduled on the design drawings. Minimum schedule data shall include:

- Service
- Location
- Filter type (bag, pleated, etc.)
- MERV (Minimum Efficiency Rating Value)
- Dust spot efficiency
- Filter dimensions including depth
- Clean filter pressure drop
- Dirty filter pressure drop (1" w.g. typical)

For the typical air handler, specify filters and frames capable of a dirty filter pressure drop of 1" w.g. In all cases, size air handling (and exhaust) systems so that design air volumes can be delivered at the dirty filter pressure drop condition, not at some intermediate filter drop condition.

For filter efficiencies above 30%, bag filters shall be specified. Due to problems with disposal, box style filters shall not be used except in unusual circumstances, when approved by the Design Manager.

Roll type filters shall not be used.

Washable filters shall not be used.

Filters shall be designated as face mounted with the filter seals sealing against the upstream side of the filter frame. *Side slide filters shall only be used in unusual circumstances.*

For air handling equipment above 5000 CFM, always provide a prefilter and a secondary filter, located upstream of the first coil in the unit. This includes units equipped with final filters at or in their discharge.

Design filters so that the maximum air flow velocity across the filter does not exceed 500 FPM.

In all cases the AE's design must provide adequate access to allow changing filters. It shall not be necessary to remove fixed items, including ceiling grid, to change filters.

Filters and filter rack design should be based on the use of 24"x24" filters whenever possible. The use of 12"x24" filters to complete rack configurations is acceptable. If 24"x24" and 12"x24" modules are not possible, use industry standard filter sizes.

Filter Efficiency Guidelines

The below are guidelines only. Specific project requirements may mandate higher efficiency ratings.

Very small or non-critical air systems serving spaces less susceptible to dirt, e.g. mechanical rooms, may be designed with prefilters only.

Pre-filters shall be 2" deep, 30% efficient, MERV 8, pleated panel type. Provide pre-filters in front of any filter with a dust spot efficiency of 65% or greater.

Secondary filters for air handlers with a significant return air component shall be 65% dust spot efficient, MERV 11, bag type.

Secondary filters for continuous 100% outside air units shall be 95% efficient MERV 14, bag type.

Vivarium animal room filters used to protect exhaust Laboratory Terminal Airflow Units shall be ring panel type filters. These shall normally be mounted in the duct as opposed to on an exhaust grille face, and shall be equipped with a Magnahelic gauge.

Provide the manufacture's standard efficiency filters for packaged terminal air conditioners, fan coils, and similar small equipment. However, when this equipment exceeds 1000 CFM, specify 2" deep 30% efficient MERV 8 filters whenever possible.

DESIGN GUIDELINE 230013
AIR HANDLING UNITS

General

This section describes design requirements, types, and arrangements of air handlers required, sizing considerations, and minimum air handler construction features. Testing, temporary use, and training are also covered.

Related Sections

U-M Design Guideline Sections:
230000 – Basic Mechanical Requirements
230011 – Fans and Accessories
230012 – Air Filters

U-M Master Specification Sections:
230900 – Mechanical Systems Controls
233400 – Fans
234000 – HVAC Air Cleaning Devices
237323 – Custom Air Handling Units
237324 – Semi-Custom Air Handling Units
238216 – Coils and Drain Pans

Design Requirements

Air handlers shall be specified using the U-M master specifications: 237323 - Custom Air Handling Units, or 237324 – Semi-Custom Air Handling Units. Edit these specification sections to make them project specific. Note that when using these specifications the U-M related master specifications for fans (233400), filters (234000) and coils (238216) must be included since these components are not specified within the air handler specifications. Turn on hidden text and read all spec. editor's notes when editing specifications.

For all air handling equipment greater than 2000 CFM, the engineer shall provide a scaled elevation of the unit on the design drawings. This elevation shall indicate component arrangement and identify each unit component: dampers, access sections, doors (including door size), door windows, access panels, pre and final filter, coils, humidifiers, fans, blenders, eliminators, diffuser plates, lights, drain pans, flex connectors, and all significant accessories. Maximum height, width, and depth, as well as base rail height, shall also be indicated.

For all air handling equipment, the plan view drawings shall indicate the arrangement of each component, overall unit size, coil pull space, and access door swings. The plan views shall also indicate the unit's designation and the maximum unit CFM.

Units shall be labeled with sequential alpha-numeric designators. For retrofit designs, do not repeat the numerical designator of existing units; coordinate with U-M Utilities and Plant Engineering via the U-M Design Coordinator to determine the appropriate designator.

Designate adequate roof curb or housekeeping pad height to allow proper trapping of cooling coil drain pans. Provide a detail that indicates the trap height dimensions for every coil trap.

To avoid snow entrainment, limit air velocity through intake louvers to 300 FPM through the louver free area at outside air volumes that occur at 35ºF or less (for example, this volume is the maximum supply air volume for 100% outside air units; for units with return, it is half the maximum supply air volume assuming 75ºF return air and 35ºF outside air being mixed to 55ºF), and limit intake plenum velocities to 500 FPM in all directions. Slope the bottom of plenum/duct connections to the louver so that water drains out the louver.

Air Handling Unit Types

For the purposes of this guideline, semi-custom units are defined as air handlers for light to medium duty use, consisting of manufacturer's pre-engineered standard modules, with limited selections in terms of quality, features, and arrangement.

Semi-Custom units should normally be specified for applications such as offices, class rooms, and light duty lab applications (e.g. dry labs with very few or no fume hoods) where operation is generally limited to 5 days per week, 8-12 hrs/day. However for units greater than 20,000 CFM, the design should normally be based on custom units.

Custom units should normally be specified for large wet labs and dry labs, 100% outside air applications (except mechanical or electrical room ventilation), vivaria, clean rooms, 24/7 applications, and other medium to heavy duty applications.

Contact the U-M Design Coordinator early in the SD phase to establish custom versus semi-custom AHU locations.

Roof top units are not preferred and shall not be used except when approved by the U-M Design Coordinator.

Arrangement

Fan Arrangement: Draw through units are normally preferred, except for exterior units.

Returns fan configurations shall be used. Configurations using exhaust/relief fans or no return fan should be avoided and shall be used only when dictated by unusual circumstances.

Units shall be arranged to allow proper access for routine maintenance of all components. At minimum, access shall be provided for the replacement of the following components: Filters, coils, fan shafts, bearings; without unit disassembly or partial demolition of the unit or adjacencies.

Sizing

For applications where load growth is likely to occur over the life of the unit, e.g. lab buildings, size all air handler components (fans, coils, filters, etc.) with additional capacity for future use. Determine the appropriate additional capacity in consultation with the U-M Design Coordinator.

When sizing units, assume 5% duct leakage and 1°F temperature heat gain in supply ducts.

Fans shall be sized assuming dirty filter pressure drops, which are typically 1" w.g. static pressure drop across the pre filters and 1" w.g. static pressure drop across the final filters.

Construction

Unit Casing

Solid inner walls are preferred whenever possible. Perforated walls should only be utilized when external sound attenuators or other means are found to be ineffective in meeting the required noise criteria.

The minimum wall thickness for semi-custom units shall be 2". The minimum wall thickness for custom units with fiberglass insulation shall be 4", except 2" foam insulated panels are permitted if such panels match the performance of 4" thick fiberglass insulated panels. See the U-M Master Specification section 15854 for more details.

For roof top mounted units, consult the Architect and the U-M Design Manager to determine if a custom paint color or screening is required.

For units above 10,000 CFM, each access section shall be illuminated. See the U-M Master Specifications for details.

Drain Pans

Drain pans shall be designated as above floor type. Avoid floor recessed drain pans whenever possible due to the difficulty of replacement.

Drain pans shall be stainless steel. Plastic drain pans are acceptable in units of less than 2000 CFM.

Access Sections

Access sections shall be provided to allow up and down stream access to every unit component. For example, an access module shall be provided between each heating coil and cooling coil section; both the air entering and air leaving side of each coil shall be visible for inspection. The designer must accommodate these access sections when fitting units into the available space.

For large custom and semi-custom units (> 20,000 CFM), in particular those with a large outside air component, consider (with the U-M Design Coordinator) providing an access section between the pre and final filters of adequate size to allow the final filters to be replaced from the upstream side without removing the pre-filters. As and alternative to the above, a hinged pre-filter section may be specified. For hinged pre-filter configurations, also specify a gap between the pre-filter and final filter frames to allow a static pressure tip to be installed so that a separate pressure drop reading may be taken across the pre and final filter banks.

Access Doors

Hinged access doors are required in each access section.

Minimum door widths are specified in the U-M AHU Master Specifications. For semi-custom units, doors shall be a minimum 18" wide, but 24" width is strongly preferred. Widths narrower than 18" should be avoided and are unacceptable for sections requiring personnel (vs. inspection/arm reach only) access. For custom units, minimum door width shall be 24". In all cases, provide doors that are the full height of the unit, maximum 6' high.

Windows shall be provided in all access doors on units greater than 5000 CFM, and for all air handlers providing service to areas that might be compromised by opening an access door for inspection, e.g. clean room units, lab units with stringent temperature, pressure, or humidity control, etc.

Mixing Box Section/Air Blenders

The use of air blenders is strongly discouraged since U-M's experience is that such devices are ineffective in preventing stratification problems, leading to frequent nuisance freeze stat trips or more severe problems. Instead, arrange outside air and return ducts so that after combining, at least two directional changes occur prior to entering the air handler proper, or utilize blow through or other fan arrangements that completely eliminate such stratification problems. Use air blending devices only as a last resort and only with the permission of the U-M Design Manager.

When used, air blending units should be factory fabricated and should consist of fixed blades capable of providing a mixed air temperature within 6ºF of the theoretical mixed air temperature. In a variable air volume AHU, this 6ºF maximum deviation should apply throughout the CFM range specified. The devices should be sized to provide a maximum pressure drop of 0.15 inches water, with a stratification range not exceeding +/- 6º from the mean temperature. The A/E should lay out the AHU to provide a plenum sized for a minimum of 1/2 blender diameter upstream between return air duct and blender, and 3 blender diameters downstream between the blender and the first air flow obstruction (filter, coil, etc.).

Coils and Face/Bypass Modules

The maximum face velocity for cooling coils in both custom and semi-custom units shall be limited to 450 FPM. This face velocity shall be based on the actual coil face area sans any safing around the coil.

Maximum face velocities shall be based on any future capacity allowance for the AHU.

For units 10,000 CFM or greater, coil tracks and individual coil access panels shall be specified. See the U-M AHU Master Specifications for further details.

Coils shall have a maximum of six rows, and maximum fin spacing of 10 FPI. When these criteria can not be met, provide two coils piped in a series arrangement.

When multiple coils are stacked vertically, each coil in the stack shall be equipped with a balancing valve (circuit setter).

For 100% outside air units, or units with a large outside air component, "run-around" pumped hot water heating coils are preferred in lieu of steam coils (include redundant pumps for critical applications), for preheating applications. If preheat steam coils are used, multiple staged on/off steam coils shall be used, or a face/bypass arrangement may be used. For face/bypass arrangements, internal bypass or "Wing" coils shall not be utilized, rather an external coil bypass shall be utilized. The external bypass shall be routed to the downstream side of all unit coils (i.e. downstream of both the preheat coil and the cooling coil) and shall be sized to exert the same relative pressure drop on the fan as flow through the coils would exert.

Dampers

Damper construction is designated in U-M Master Specification 230900 - Mechanical Systems Controls. The U-M AHU Master Specifications also reference 230900 for damper construction. All air handler specifications shall utilize this damper specification for dampers provided by air handler manufacturers. This includes smoke and combination fire and smoke dampers that are provided by air handler manufacturers.

Filters

Units shall include pre-filters and final filters, except that very small, non-critical units or units serving spaces less susceptible to dirt, e.g. mechanical rooms, may include prefilters only.

Units serving substation rooms shall always be equipped with pre and final filters.

Pre-filters shall be 2" depth, 30% efficient, pleated panel type; final filters shall be bag type. Roll type filters shall not be used.

Filters shall be designated as face mounted with the filter seals sealing against the upstream side of the filter frame. Side slide filters shall only be used in unusual circumstances

Fans

Limit fans speeds to 1200-1400 RPM.

Forward curved fans shall not be specified accept when air foil or backward inclined fans are not available, or when a forward curved fan provides significant performance advantages. semi-custom units are often available with either forward curved or backward inclined/air foil fans. Determine if backward/air foil type are available and always provide a design based on same when available, except as qualified above.

When plenum fans are utilized, specify a "guard cage" around the fan for safety. The impacts on fan performance of such cages as well as impacts from any inlet mounted back draft dampers shall be evaluated when selecting such fans. Assure proper up and downstream and side-to-side (relative to plenum walls and any adjacent fan(s) in the same plenum) clearances are maintained around plenum fans to prevent system effect problems or poor air distribution across upstream components.

Extended lube lines shall be specified where bearings are difficult to access or for air handlers providing service to areas that might be compromised by opening an access door for bearing lubrication, e.g. clean room units, lab units with stringent temperature, pressure, or humidity controls, etc.

Testing, Temporary Use, Training

Factory Testing

Custom units should normally be factory tested for air volume, pressure, leakage, and sound performance. Such factory testing is normally not required for semi-custom units, however it should be considered for air handlers that are not arranged in simple horizontal of vertical configurations, e.g. a fan section stacked on top of the coil sections. See the U-M AHU Master Specifications for further details.

Temporary Use/Field Testing

The U-M AHU Master Specifications contain specific criteria regarding the temporary use and field testing of air handling units.

Training

Training is not typically required on air handlers and should not be specified unless directed to do so by the U-M Design Coordinator. Consider need for training if units include direct expansion cooling.

DESIGN GUIDELINE 230014
PACKAGED ROOF TOP AIR CONDITIONING UNITS

Roof top air conditioning equipment (RTUs) is not preferred and shall be used only when absolutely necessary. Specify high quality roof top air conditioning units only. Refer to list of preferred manufacturers. Where necessary, use a continuous, sound attenuating curb when no access is required to the bottom of the equipment or support the equipment 24" above the roof (18" minimum) so that roof maintenance can be performed. Provide a catwalk for service access to routinely serviced components (such as control cabinets) that will be out of reach.

Typically, rooftop units controls should be U-M standard DDC. Direct expansion compressor and refrigeration controls may be manufacturer's standard.

Generally, units with return fans are preferred to units with exhaust fans.

DESIGN GUIDELINE 230015
FAN COIL UNITS AND BLOWER COIL UNITS

General

This section describes definitions, applications and design requirements for fan coil units and blower coil units.

For purposes of this section:

- Fan coil units (FCUs) refer to a variety of relatively small, unducted, floor or ceiling mounted units, used for cooling and/or heating the room in which they are located.
- Blower coil units (BCUs) refer to small to moderate-sized, ducted, floor or ceiling mounted units, used for cooling and/or heating the room in which they are located, and/or adjacent areas.

Fan coil units are one of the least preferred methods of providing air conditioning at the University. Blower coil units are generally preferred over FCUs, but less preferred than central HVAC systems.

Related Sections

U-M Master Specification Sections:
230900 - Mechanical Systems Controls
238219 - Floor Mounted Fan Coil Units (Un-ducted)
238220 - Horizontal Fan Coil Units
238221 - Blower Coil Units

Design Requirements

The U-M specifications listed above are typically recommended for use as the starting basis for fan coil and blower coil specifications on U-M projects. The A/E shall edit the specifications to make them project specific, in particular in the area of controls. The specification for floor mounted fan coils (238219) includes controls often used on U-M Housing projects, which may not be the appropriate choice for other projects. Turn on hidden text and read all spec. editor's notes when editing specifications.

For FCUs and BCUs, pay close attention to acoustic requirements of space served. FCUs and BCUs are generally not acceptable in classrooms, conference rooms.

Consider possible requirements for future additional capacity, and redundancy.

All FCUs and BCUs shall be individually scheduled and identified on the drawings.

Consider seasonal requirements and capabilities of chilled water, steam, and heating hot water.

Indicate maintenance requirements on drawings, for filter access. Account for access to all components requiring regular maintenance, including all valves.

For FCUs:

- Provide IAQ drain pan and code cpmpliant method of over-flow protection
- Insulate cold piping inside and outside housing.
- Provide removable, replaceable filter.
- Provide multi-speed direct drive fans.
- Generally install floor mounted, non-recessed type. Low profile units are not acceptable due to difficulty in maintaining.
- Do not provide with integral outside air connection. Provide separate minimum ventilation air where required.

For BCUs:

- Provide IAQ drain pan, and code cpmpliant method of over-flow protection
- Insulate cold piping inside and outside housing.
- Provide removable, replaceable filter: 2" pleated, minimum 30% efficiency.
- Provide belt drive fans with adjustable sheaves.
- Floor mounted, non-recessed type or ceiling mounted is acceptable, depending on project requirements, provided maintenance access requirements are met.
- Do not provide with integral outside air connection. Provide separate minimum ventilation air where required. If required, outside air for minimum ventilation load may be ducted to BCU return duct, provided outside air is filtered and includes an integral damper interlocked to BCU operation. BCUs should not be used for 100% economizer cooling.
- Use of BCUs should be limited to systems below 3,000 to 5,000 cfm, and should not be used in conjunction with VAV boxes.
- The generally preferred location of ceiling mounted BCUs is above corridors to allow service without disrupting the occupied space.

For FCU and BCU controls:

- See specification 230900 for control valve and actuator options.
- Do not provide factory-mounted, manufacturer DDC controls. Pneumatic or electronic thermostats, and manually controlled FCU fan speed are generally acceptable where there is little energy savings associated with reset controls. If networking or more complex control strategies are justifiable, provide U-M DDC controls.

Installation Requirements

Specify on the construction documents that the units must be installed to allow for maintenance of all serviceable components within the unit through without removing ducts, piping or other adjacent systems such as light fixtures.

Unions and isolation valves should be installed at all water service points to facilitate unit removal without disruption of service to the remainder of the building.

DESIGN GUIDELINE 230016
COMPUTER ROOM AIR CONDITIONING

General

This section addresses air conditioning requirements for computer rooms (including server rooms), and requirements for computer room units.

Related Sections

U-M Design Guideline Sections:
230000 – Basic Mechanical Requirements

U-M Master Specification Sections:
230900 – Mechanical Systems Controls

Design Requirements

Cooling Loads

Cooling loads vary widely in "computer rooms" throughout campus. The A/E shall work closely with the U-M Design Manager and end user to determine actual peak diversified load based on actual equipment. Consider future growth, redundancy requirements (see additional comments below in "Computer Room Unit Selection"), and seasonal changes, including seasonal limitations on the chilled water system, if used to provide primary source cooling. Clearly define all load and system design assumptions to U-M Design Manager, in a OPR/BOD document.

Temperature and Humidity Criteria

Clarify and document acceptable temperature and humidity criteria (summer and winter, including allowable range) with users and U-M Design Manager. The ASHRAE "recommended" temperature an humidity ranges found in the ASHRAE publication *"Thermal Guidelines for Data Processing Environments"* (most recent edition) should be the design criteria typically utilized for computer rooms. More stringent requirements shall be challenged and validated by the requesting parties because of the higher energy use that will result.

U-M generally discourages humidification for dedicated computer room systems. While humidification criteria is rarely as high as it had been in years past, extremely low RH (below 15%) may not be acceptable. Carefully analyze psychrometrics and alternatives (such as discharge air reset) before including computer room humidification. If humidification is required, steam generator-type humidifiers are preferred.

Source of Cooling

Outside air (air handler economizer cycles), in particular for larger computer rooms, is the preferred source of cooling when the application and infrastructure conditions permit. For critical applications, chilled water is the preferred source of cooling. Where chilled water is not available year-round, or where the chilled water system is prone to unscheduled shut-downs (including loss of chilled water during transition from free cooling to absorption cooling), combinations of chilled water primary and mechanical cooling secondary are recommended. For these applications, the refrigeration circuit may be air-cooled (equipped with low ambient refrigerant side controls) or glycol-cooled (with remote dry cooler).

The use of potable cold water for condenser cooling is not acceptable, except for very short-term temporary or emergency applications. These rare applications should be made only with the approval of the U-M Utilities Group through the U-M Design Manager.

Computer Room Unit Redundancy

While some computer rooms require full "n-1" redundancy (systems that can meet all loads with loss of the single largest component), most do not require this level of redundant capacity. Conversely, most systems will require some level of back-up cooling. For rooms with loads over 5 tons, multiple units should be installed, to offer some cooling capacity in the event of unit failure.

Controls and Alarms

Units that include mechanical cooling may include manufacturer's standard electronic controls. Units with chilled water cooling only should be DDC controlled, integrated into U-M standard DDC system. In either case, unit failure and high temperature alarms should be integrated into U-M DDC BAS system.

Where chilled water is less reliable, where system does not provide full redundancy, and other select applications, consider using high temperature warning at 5F above setpoint to implement a graceful shut-down of non-essential equipment. In this way, users can improve reliability of essential systems. This strategy is not fully adopted by all computer room users.

For units located above a raised floor and other locations where deemed necessary, install a water sensor to detect an overflowing drain pan. Connect alarm to U-M DDC BAS system.

Emergency Power Impact

Computer rooms are not typically fed from emergency power, although many will have UPS systems. In the event that they are fed from emergency power, consider need to put computer room units and all required controls on emergency power. Central chilled water systems are not typically fed from emergency power.

Additional Computer Room Unit Features

A filter should be installed at the air-return opening.

The unit should be supplied with the optional integral fused disconnect switch, and all necessary controls to provide a completely functional unit.

Installation Requirements

At a minimum, chilled water coils should be piped with a 2-way control valve, isolation valves, and individually sized balancing valve (manual or automatic).

The unit should be supported from the concrete sub-floor slab with properly rated supports. Mounting units directly on raised floors is not be acceptable.

DESIGN GUIDELINE 230017
WINDOW AIR CONDITIONING UNITS

General

Window units are acceptable only if specifically approved by the University Project Coordinator.

Design Requirements

The A/E is responsible for field verifying the adequacy of the existing electrical service within the space to assure that the addition of this electrical load will not overload the circuit when all other existing equipment is operating at design capacity. If a new feed is required, it should be a part of this renovation project.

Equipment Requirements

Units which will be used to supply year-round ventilation should be equipped with an electric heating coil.

Units should be furnished with a window sleeve, approved by maintenance personnel.

Installation Requirements

Units should be mounted in the upper section of windows but not through-the-wall above the window (with ductwork to the occupied spaces).

Units should normally be mounted flush with the building exterior, projecting into the room. Deviations require approval by the Exterior Elements Design Review Committee.

DESIGN GUIDELINE 230020
DUCT SYSTEM DESIGN

Related Sections

U-M Design Guideline Sections:
230030 - Laboratory Ventilation Design

U-M Master Specification Sections:
233100 - HVAC Ducts & Casings
233300 - Air Duct Accessories & RGDs

General

A/E duct designs shall, at minimum, be in general compliance with SMACNA standards.

The A/E's duct specification shall state that duct construction shall, at minimum, meet SMACNA duct construction standards . The A/E's duct specification shall state that the Contractor shall provide their duct construction standards as their first shop drawing submittal so that the A/E can verify compliance with SMACNA standards.

Although typically SMACNA's HVAC Duct Construction Standards, Metal and Flexible, will apply, the A/E's spec. should also reference other standards if appropriate, e.g. SMACNA industrial duct standards.

The A/E shall provide a table that identifies the duct construction requirements for the project. At minimum the table shall include the following:

- Service/Location and/or System
  e.g. Fume hood exhaust upstream of laboratory terminal units
- Duct Material
  e.g. Stainless Steel (SS), Galvanized, Galvanized Plastic Coated Duct (PCD), etc.
- Pressure Classification
  e.g. -2.0" w.g.

Design

Future Capacity: The amount of future air flow capacity the duct system shall be capable of handling, if any, shall be determined in consultation with the U-M Design Manager.

For duct pressure classifications greater than +/- 2" w.g., duct velocities shall not exceed 2500 FPM without the specific permission of the U-M Design Manager.

The amount of diversity assumed in the duct design shall be stated in the Design Intent Document.

Duct aspect ratios should be limited to a maximum of 4:1.

Round duct elbows constructed with centerline radius equal to or greater than 1-1/2 duct diameter shall be specified. Gored elbows are not permitted.

For rectangular duct, the AE shall design radiused rectangular elbows with r/W ratios of 1.00 or above, to the greatest extent possible. Squared elbows with turning vanes should be indicated when radiused elbows are impractical to fit .

Transition slopes should generally be 1/3 or less.

Indicate access panels on plans wherever ducts contain devices requiring maintenance or calibration, such as air flow stations, humidifiers, fire and smoke dampers, reheat coils, etc.

Indicate maintenance access by "dashing out" no-fly-zones in front of DDC terminal equipment controllers, laboratory air flow unit controllers, filters, and at other major duct mounted components.

Flexible duct shall be properly supported and shall not exceed 8' in length. The A/E should consider specifying flexible elbow duct supports (sample: www.flexflowelbow.com). Provide a detail demonstrating proper flex duct support.

Flexible duct connected to the inlet of terminal units shall be separated with a 24" long section of rigid metal duct located between the flex and the unit inlet. Provide a detail indicating this requirement.

Duct sound liner that is directly exposed to the air stream shall not to be used, except in exceptional circumstances and only with the permission of the U-M Design Manager. Utilize other duct design methods such as low velocities, directional changes, etc. for noise control. Double wall perforated duct with sound liner behind is permitted, provided a Tedlar or Mylar wrap is located between the sound liner and the perforated metal is specified. Sound attenuators shall be similarly specified or shall be packless type.

Materials/Construction

Galvanized duct shall be specified as G-90.

Fibrous glass duct shall not be used. Exception: This material may be used for "return boots" or short transfer ducts, i.e. for short segments of duct that are not hard connected to the duct system, used for the purpose of sound attenuation.

The A/Es specification shall define seal class as corresponding to the definitions found in SMACNA's HVAC Duct Construction Standards, Metal and Flexible. Specify the following seal classes:

- Ductwork rated for pressure of 2" w.c. or less: Class C (seal transverse joints only.)
- All other ductwork: Class A (seal all transverse joints, longitudinal seams, and duct wall penetrations).

Duct Sealant shall be specified as asbestos free.

Exhaust Duct

The A/E shall research the specific effluent being exhausted and shall specify duct materials and duct joining systems that will cost effectively provide long life and safe operation. Determine if a dedicated exhaust system is required or if multiple effluent sources can be safely exhausted through common exhaust ducts.

For the typical general research laboratory exhausting highly dilute, low corrosivity effluent, the following materials are often selected:

- Fume Hood Exhaust to Main Lateral: PCD
- Room General Exhaust (exhausting room only, to maintain required air change rates, *not* exhausting specific point sources): Galvanized Duct
- Autoclaves, Glass Washer/Glass Dryers, and similar moderately steam laden exhaust, from source to Main Lateral: stainless steel, welded longitudinal joints, duct sealant at transverse joints and duct wall penetrations, sloped down and back toward source to promote condensate drainage.
- Exhaust Mains/Laterals Above Lay-In/Accessible Ceilings, conveying fume hood, autoclave, or similar exhaust that is heavily diluted with room general exhaust: Galvanized duct.
- Exhaust Mains/Laterals/Risers in Shafts: PCD
- Exhaust Mains/Laterals/Risers exposed in penthouses and machine rooms: Galvanized Duct

The A/E' specification shall indicate that duct accessories and fasteners shall match the specified duct material, e.g. SS fasteners in SS duct, plastic coated components in PCD.

Tie rods shall not be permitted in exhaust duct running in shafts.

Exhaust with a heavy steam component, e.g. vivarium cage/rack washers, shall be specified as stainless steel duct with all seams, joints, and duct wall penetrations seal welded.

For positively pressurized sections of hazardous exhaust located inside buildings, including penthouses and machine rooms, specify that all duct seams, joints, and duct wall penetrations shall be seal welded. Locating positively pressurized hazardous exhaust in such locations is poor design practice. Obtain U-M Design Manager's permission first.

See U-M Design Guideline 230030 - Laboratory Ventilation for additional information on laboratory exhaust.

Installation

Duct leakage testing is required on all but very small U-M projects, and shall be specified as follows:

Leakage testing shall occur before duct is insulated or otherwise concealed.

Testing pressure shall match the duct's construction pressure class.

All ductwork with a pressure classification greater than 2" w.g. (positive and negative) or that is specified as "seal welded" shall be leak tested.

Ducts shall be leak tested per the procedures in SMACNA's HVAC Air Duct Leakage Test Manual.

Prior to testing, isolate any components that might be damaged by leak testing.

Duct leakage shall not exceed SMACNA Leakage Class 3.

Duct specified as seal welded shall demonstrate zero leakage.

Reseal and retest as required to achieve the specified leakage class.

Duct shall also pass an audible and touch test (2" from duct), conducted by the owner's representative, regardless of pressure class. All gross leaks and audible noise shall be eliminated.

DESIGN GUIDELINE 230021
TERMINAL AIRFLOW UNITS

Scope

Variable and constant volume non-fan powered terminal airflow units for general HVAC.

Related Sections

U-M Design Guideline Technical Sections:
230030 Laboratory Ventilation Design

U-M Master Specification:
233600 - Air Terminal Units

U-M Standard Details:
15896001 – Supply Air TAU Clearance Detail

General

This guideline covers conventional VAV/CAV terminal airflow units (TAU). It does not cover fan powered boxes. U-M master specification 233600 – Air Terminal Units shall be used as the basis for the VAV/CAV box specification on all projects. The A/E shall edit the U-M specification to make it project specific. Turn on hidden text and read all spec. editors notes when editing the specification.

Commercial grade VAV/CAV boxes shall not be used in laboratories, vivariums, or other spaces requiring accurate room pressurization control. See design guideline 230030 - Laboratory Ventilation Design for the terminal units required for those areas.

Specification Requirements

VAV & CAV Boxes

Lining: dual density thermal/acoustic insulation with a cleanable foil liner is standard at U-M, and is specified in the U-M master specification 233600.

Access panel: Access panels to allow up or downstream access to the reheat coil are not required.

Controls: VAV and CAV box control shall normally be by direct digital control (DDC) with electronic actuators.

For a standard DDC VAV/CAV boxes:

The box manufacturer shall provide the flow sensor and the damper.

The controls contractor shall furnish the following (all specified in U-M's master control specification 230900):

- Electronic damper motor actuator
- Electronic reheat coil valve actuator (if applicable)
- DDC controller enclosure (dust cover)

The box DDC controller, known as the "TEC" (terminal equipment controller) and the room temperature sensor, or "RTS" (thermostat), are provided by U-M to the controls contractor.

For atypical boxes (pressure/tracking control, etc.), carefully review the TEC section of U-M's master control specification 230900 for information about which trade provides specific components related to controls.

The controls contractor *may* elect to ship the controller, cover, and actuator(s) to the box manufacturer for mounting (or may choose to field mount the components), however this construction coordination issue does not need to be covered in the AE's specification provided U-M's master control specification 230900 is utilized on the project.

For the rare instances when a pneumatic controller is required, the *box manufacturer* shall provide a Krueter CSC-3011 controller, a controller dust cover, and a normally open damper with a damper operator. This information is specified in the U-M master specification 233600 - Air Terminal Units.

Design

On the plan views, for each terminal airflow unit, indicate the minimum and maximum CFM setting.

DDC controlled boxes require a minimum of 3' clearance in front of and the width of the DDC controller. DDC boxes shall be labeled with a unique identifier. Use U-M's terminal airflow unit clearance detail, 15896001 – Supply Air TAU Clearance Detail, which identifies clearance and labeling requirements. It is preferred the AE assign the unique identifier (per the detail's nomenclature system) for each box and indicate it on the design drawings.

Boxes should be located in corridors directly above suspended ceilings whenever possible, with unobstructed access for maintenance and removal.

Do not oversize boxes by more than 20%.

Attention shall be given to the take-off size and construction technique at the branch duct to assure sufficient supply air is available at actual branch duct static pressure. The A/E shall provide a take-off detail on the design drawings.

DESIGN DUIDELINE 230022
GRILLS, REGISTERS, DIFFUSERS AND AIR BALANCING ACCESSORIES

Design Requirements

Specify a 24 inches x 24 inches ceiling module whenever possible.

Size diffusers, registers and grills for a maximum space noise criteria of 30 in class and meeting rooms, and 40 elsewhere.

In VAV systems consider sizing to 80 percent design flow to prevent dumping at low flow.

Installation Requirements

All sub-main connections to main duct shall contain opposed blade balancing dampers. Branch connections serving individual outlets may not require dampers. However, volume control devices in or directly above diffusers should not be the primary means for system balancing.

Duct extractors and air flow equalizers should be specified as necessary to assure adequate flow and uniform air distribution.

Specify 2-way throw for corner installations and corridors. Specify 3-way throw at walls.

In rooms where heavier than air gases may be present locate one return air sidewall grill near floor level.

Locate supply diffusers and return/exhaust grills sufficiently distant to prevent short cycling. Distance between devices to be approximately 1 1/2 times the T-50 isovel throw. When this separation cannot be maintained, specify throw-reducing devices or specify a 3-way diffuser.

DESIGN GUIDELINE 230030
LABORATORY VENTILATION

Information for mechanical design engineers as well as architects/lab planners regarding laboratory ventilation design at U-M, including but not limited to the following:

- Equipment information (chemical fume hoods, chemical storage cabinets, BSCs, specialty hoods, and environmental rooms).
- Computational Fluid Dynamic and exhaust stack dispersion modeling requirements.
- Lab HVAC and exhaust design: guidance regarding lab minimum air change rates, duct materials, exhaust fan selection, system diversity, future capacity, etc.
- Vivarium requirements.
- Type and control of terminal airflow units for laboratories.
- Lab energy conservation.

Related Sections

U-M Design Guideline Sections:
SBA 5.2 - Animal Facilities
Sustainability 3.2 - Energy and Water Conservation
115313 Laboratory Fume Hoods
230900 Mechanical Systems Controls

U-M Master Specification Sections:
115313 Laboratory Chemical Fume Hoods
230593 Testing Adjusting, and Balancing
233600 Air Terminal Units
230900 Mechanical Systems Controls
230910 VAV/Combination Sash Fume Hood Laboratory Controls-DDC
230920 Laboratory Terminal Air Flow Units and Controls

U-M Standard Details:
Laboratory Terminal Air Flow Unit Sample Schedule
Supply Air LTAU Clearance Detail
Supply Air TAU Clearance Detail

General

Where this Design Guideline requires consultation with U-M Occupational Safety and Environmental Health Department (OSEH), all such contacts shall be made via the U-M Design Manager.

Lab Equipment Parameters

Chemical Fume Hoods

General:

U-M Master Specification Section 115313 Laboratory Chemical Fume Hoods shall be used as the basis for chemical fume hood specification on all projects. 115313 must be edited to make it project specific.

U-M Master Specification Section 115313 describes fume hood types in terms of face velocity characteristics in a "Definitions" article. These definitions shall be used when specifying fume hoods and when designing fume hood exhaust systems at the University of Michigan. Fume hood air volume requirements depend upon the particular hood type being used, therefore the mechanical designer should carefully review the hood definitions section of 115313. 115313 also describes performance requirements for Reduced Face Velocity (RFV) hoods. Extensive spec editors notes are included in 11610 to assist the A/E. Be sure to turn on hidden text and read those notes.

Multiple fume hood types may be included on a given project. Clearly delineate on the mechanical drawings the air balance and fume hood monitor alarm settings for each hood type. See "Type and Control of Terminal Airflow Units for Labs", below.

The required exhaust flow (CFM), static pressure, and hood opening area (sq. ft.) vary by fume hood manufacturer. Refer to manufacturer's data and then size duct, terminal airflow units (TAU), and fans to accommodate the manufacturer with the worst case (highest air flow and pressure drop) requirements. Provide the hood basis of design (manufacturer and model) on the mechanical design documents.

For vertical opening sashes, U-M requires sash stops be provided to restrict normal sash operation to no higher than 14" above the work surface, NOT the typical 18”. Note that some Reduced Face Velocity fume hoods incorporate an air foil mounted above the hood's working surface. U-M spec section 115313 requires that the sash stop location be adjusted proportionally upward to account for air foils mounted more than 2" above the hood's working surface. The resulting higher sash stop location will result in a somewhat larger fume hood air volume requirement. This should be accounted for in the mechanical design.

Assure the TAB specification requires that the air balancer adjust the TAUs to the air volume required for the particular manufacturer’s hood that is installed. U-M's TAB specification 15990 includes this requirement.

U-M projects use standard chemical fume hoods that operate at an average face velocity of 100 FPM, and Reduced Face Velocity (RFV) fume hoods that operate at an average face velocity of 70 FPM. Refer to the "Design Fundamentals" section of this design guideline for exhaust system sizing requirements for the various hood types.

Constant volume hoods of any type are not safe with combination sash arrangements because correct face velocity can't be assured as the horizontal sash is adjusted. If combination sashes are required, Restricted Bypass VAV hoods shall be used with the corresponding VAV type lab terminal air flow unit control.

Requirements for Floor Mounted Hoods:

- Due to the wide variation of sash configurations available on these type hoods, floor mounted hoods shall be Restricted Bypass VAV hoods.
- Sash stops shall be supplied for every section of vertical sash, set to stop the sash at 14" above the sash's closed position

Fume Hood Monitor:

Fume hood monitors are provided by the lab air flow controls contractor, NOT the hood manufacturer. U-M specification 230900, 230910 and 230920 include specifications for fume hood monitors.

Fume Hoods in Explosion Proof Rooms

Since typical VAV controls are not explosion proof, constant volume hoods are recommended in explosion proof rooms.

Mount fume hood controls and alarm monitors outside of explosion proof rooms. Mount an explosion proof audible and visual low exhaust flow alarm indicator inside the room, triggered by the fume hood alarm monitor.

Laboratory Fume Hoods for use with Radioactive Materials (Isotope Hoods)

Although a special fume hood is generally required for use with radioactive materials, verify the need for special filtration, or a direct exhaust duct route to the outside, with U-M OSEH. Filtration and direct exhaust are not typically required.

In all cases, delineate space for a future filter box directly above radioisotope hoods.

Flammable Liquid and Corrosive Storage Cabinets

Chemicals shall not be stored within fume hoods. Where a storage space for chemicals is required, a storage cabinet below the fume hood may be provided.

Corrosive storage cabinets shall be ventilated at a rate of approximately 2 CFM exhaust per square foot of cabinet footprint. Do not duct into the fume hood bench top. Instead run a separate exhaust from the cabinet up to the exhaust duct. Connect cabinet exhausts to constant volume (CV) venturi style TAUs. This could be a CV venturi style TAU serving a CV hood,

other nearby CV venturi style TAUs (serving snorkels, for example), or, gang multiple cabinet exhausts on to a dedicated CV venturi style TAU. Normally exhaust connections for cabinets should consist of a 2 inch polypropylene vent pipe equipped with a non-corrosive ball valve for balancing.

Flammable liquid storage cabinets shall not normally be ventilated. If the lab occupant requests flammable liquid storage cabinets be ventilated, obtain approval from U-M OSEH before doing so.

Biological Safety Cabinets (BSC) and Other Specialty Cabinets and Hybrid Hoods

Selection of the type, size, class, and manufacturers of BSCs and special "hybrid" hoods shall be made by the researcher and the U-M OSEH representative, in coordination with the Architect/Lab Planner/Mechanical Engineer.

If exhaust connection is required to a BSC, do not assume a direct connection is required since more often the BSC type will allow an indirect, hood mfg. provided, thimble (canopy) connection. Verify the BSC type and the corresponding exhaust connection required, direct or thimble connect, with U-M OSEH.

Many specialty cabinets and hybrid hoods (which often filter downflow supply air) require higher than typical exhaust flow rates (i.e. rates higher than would be suggested based on hood face area) or have high static pressure drop. Always consult the manufacturer's product manuals and design accordingly.

Environmental (Cold) Rooms

Ventilation air is required in all environmental rooms where work with volatile chemicals, compressed gasses, or continuous work activity is planned. Ventilate at 6 air changes per hour or as required by code, whichever is higher.

Ventilated environmental rooms typically require desiccant dryers to avoid excess defrost cycle times. Thus, in addition to a ventilation supply and exhaust air connection to the room, the mechanical engineer will need to provide an exhaust connection for the removal of hot, moist air rejected from the desiccant unit.

Where multiple environmental rooms are located in close proximity to one another, consider ganging the rooms on common CV TAUs, to provide the required supply and exhaust air.

Perchloric Acid Fume Hood Systems

Refer to Appendix B of this Design Guideline.

Lab Room Airflow Modeling

Computational Fluid Dynamic (CFD) studies are typically required when multiple hoods are located near each other and within the same room, unless this requirement is waived by the U-M Design Manager.

New lab buildings with "typical" fume hood alcoves or lab modules shall have CFD modeling done for each module type. CFDs shall demonstrate hood capture effectiveness, optimize air-change-rates (ACH), and evaluate supply outlet and exhaust inlet locations.

CFD Studies shall be considered for other unique air flow arrangements where proper ventilation, air conditioning, or exhaust are considered critical.

HVAC and Exhaust Systems Design

Exhaust Dispersion Assessments

Dispersion studies ensure proper, safe, dilution of exhaust emissions. Dispersion studies shall be done by qualified firms that have a minimum of 5 years of experience performing such studies.

All new lab buildings shall have a comprehensive dispersion study performed.

All critical exhaust sources shall have a dispersion study.

Renovation projects with exhaust fan volumes ≥ 5000 cfm capacity shall have a dispersion study.

Dispersion studies shall be *considered* for all other renovation projects. For example, a project installing a new outdoor air intake on a lab building likely would justify a study.

Since the results of dispersion studies often require the A/E's initial design to be modified, they should be started as early as possible in the design process.

Design Fundamentals

General:

The specific standards that apply to a particular project should be determined during programming. The following are typical requirements:

> Research labs: NFPA 45 Standard for Fire Protection for Laboratories Using Chemicals.
>
> Hospital: All hospital projects governed by the Michigan Department of Health, Health Facilities Evaluation Section, shall comply with the Minimum Design Standards for Health Care Facilities in Michigan, and NFPA 99 Standard for Health Care Facilities.

The guidelines expressed herein are meant to supplement, not supersede, code requirements. Where conflicts exist, the AE shall review with the U-M Design Manager.

Designs may also need to comply with various U.S. Government standards or guidelines (e.g. National Institute of Health, Department of Agriculture, etc.); establish which apply during project programming phase.

Laboratory supply and exhaust air shall be dedicated to lab areas within the building and shall not be part of HVAC systems serving other building areas (offices, toilet rooms, vivariums, etc.).

Because U-M specifications and details specifically address laboratory spaces, it is critical that the A/E clearly delineate on the project drawings which spaces are laboratories.

Lab general and fume hood exhaust shall be manifolded whenever possible, as permitted by code, to reduce first cost and improve energy efficiency and maintainability.

Supply air shall be "once through" (100% outside air); it shall not be recirculated outside a laboratory room. Air may be recirculated within the laboratory room itself, e.g. local fan coils. Some very low hazard level labs may use recirculated air when approved by U-M OSEH.

The use of non-DX type fan coils or chilled beams for sensible loads is encouraged to reduce the amount of outside air required for lab cooling. For labs affecting patient care in hospital facilities, the Minimum Design Standards for Health Care Facilities in Michigan precludes the use of recirculating fan coil units in labs unless outfitted with a HEPA filter.

Rooms and all TAUs serving laboratories shall be scheduled. Provide all of the information contained on the U-M sample schedule Laboratory Terminal Air Flow Unit Sample Schedule.

HVAC systems serving laboratories, including rooms with chemical fume hoods, shall be designed for variable air volume (VAV) using tracking supply, general exhaust and fume hood TAUs. While this means supply and general exhaust shall be variable flow, it does not necessarily mean fume hoods are to be variable flow:

For purposes of initial program budget, the use of VAV fume hoods/controls should be assumed. As the program is further developed, evaluate and justify VAV vs CV fume hoods. When analyzing the potential benefit of VAV type fume hoods, evaluate with and without automatic sash lowering devices.

- Evaluate if the LMVR (see LMVR discussion below) for the room precludes the use of VAV hoods because general exhaust would increase to maintain the LMVR as the hood sash was closed.
- Assume fume hood sashes with automatic devices will result in an average hood air flow reduction of 30%,
- Assume fume hood sashes without automatic devices will result in an average hood air flow reduction of 10%.

- Hood with combination sashes must be equipped with VAV TAUs/controls.

Do not diversify fume hood loads relative to exhaust fan/system sizing; assume all hoods are at 14" sash position at all times .

Size supply and exhaust systems with additional capacity for future use. Determine the appropriate additional capacity in consultation with the U-M Design Manager. Minimum additional capacity: 10%.

Size fume hood TAUs and the associated TAU branch duct as follows:

- Full Bypass Constant Volume Type: For the air volume required to attain 100 FPM at full open sash position.
- Partial Bypass Constant Volume Type: For the air volume required to attain 100 FPM with sash at sash stop position.
- Restricted Bypass VAV Type: For the air volume required to attain 60 FPM at full open sash position, 100 FPM with sash at sash stop position.
    - Combination Sashes: 100 FPM must be achieved with the sashes in the position that creates the maximum free area opening. Example: If the sash has 4 horizontal sashes, the face velocity must be achieved with 2 sashes in the full open position (with the sash vertical position closed).
- Full Bypass Constant Volume **RFV** Type: For the air volume required to attain 70 FPM at full open sash position.
- Partial Bypass Constant Volume **RFV** Type: For the air volume required to attain 70 FPM with sash at sash stop position.
- Restricted Bypass VAV **RFV** Type: For the air volume required to attain 60 FPM at full open sash position, 70 FPM with sash at sash stop position.
    - Combination Sashes: 70 FPM must be achieved with the sashes in the position that creates the maximum free area opening. Example: If the sash has 4 horizontal sashes, the face velocity must be achieved with 2 sashes in the full open position (with the sash vertical position closed).
- Exhaust Valves for Floor Mounted Hoods: Must use VAV type TAU/controls. The exhaust air valve shall be sized so that the required face velocity can be achieved with one sash fully open. Example: If sash is 28" high and can be opened to create a free area opening 28" high, the exhaust air valve must have enough capacity to achieve the required face velocity (e.g. 100 FPM) at 28".

LMVR: Lab Minimum Ventilation Rate

Each lab room shall be ventilated at a minimum Lab Minimum Ventilation Rate. The LMVR shall be established in consultation with U-M OSEH, and shall be in compliance with codes and the Minimum Design Standards for Health Care Facilities in Michigan (when applicable). Typical LMVRs, room pressurization, and air flow control requirements can be found in Appendix A of this Design Guideline.

Snorkels and Similar Local Exhaust Terminations

To obtain U-M OSEH certification, designs shall provide a 100 FPM capture velocity 4" from the centerline of the plane of the device opening. Obtaining 100 FPM may require very high flows in the upstream connection to the device opening, resulting in high pressure drop and noise. Therefore these devices should be carefully selected and specified, and performance capability reviewed and approved by U-M OSEH.

Negative or Positive Pressure

Pressurization in and out of rooms shall be indicated on plans with directional arrows and airflow quantities (CFM).

Sealing of all room penetrations and joints shall be specified to maintain space pressurization.

If a local means of adjusting space pressurization is requested (typically accomplished with a potentiometer), specify that the adjustment device be clearly labeled to identify which direction produces positive or negative pressurization adjustment. Specify a locking enclosure for the adjustment device. Local means of adjusting pressure is discouraged.

Laboratory Pressurization Gauge

All laboratory rooms including animal rooms of all types shall be provided with a room differential pressure indicator so that room occupants can locally verify the direction of room pressurization. Provide room pressurization gauges outside and above the laboratory entrance expected to be most frequently used, in the corridor wall at the lab room. (Provide *inside*, outside, and above all BSL-3 lab doors). Analog gauges shall be used and are specified in U-M master specification 230900 and 230910. The location of the pressurization gauges shall be indicated on the lab HVAC floor plan drawings.

Emergency Operation

Provide emergency power for laboratory systems where a power failure endangers life safety.

Exhaust fans and corresponding supply fans shall automatically restart when power is restored after a power failure.

Fire detection and alarm systems shall not be interlocked to automatically shut down chemical fume hood exhaust. Exhaust fans shall continue to operate in the event of a failure or alarm condition of the supply air system. For example, if the supply air handler trips on freeze stat or smoke detector, the associated lab exhaust fan(s) shall not shut down. Proper door operation for egress shall be maintained when the supply system shuts down and the lab exhaust system continues to operate, creating a pressure differential. Some large systems may require a design that automatically reduces exhaust fan volumes, to prevent excess negative pressure at egress doors.

Indicate in the Design Intent Document, exhaust system operation under all emergency conditions (loss of power, fire, supply air failure, etc.).

Vivariums:

Vivariums require dedicated, fully redundant air handlers. Vivarium air handlers, animal room exhaust systems, terminal units, and controls shall be fed from the emergency power system.

The TAUs serving animal holding rooms shall be selected such that air flow to those rooms can be increased an additional 10% minimum, future. Size the vivarium air handler with sufficient capacity to accommodate this additional air flow capability.

Reheat coils shall utilize normally closed (N.C.) control valves to prevent over-heating animals upon a valve failure.

Each animal room exhaust shall be equipped with a duct mounted filter rack. Exhaust grille style filter frames are not preferred but may be used with the permission of the U-M Design Manager.

Laboratory Exhaust Duct

Materials

The below descriptions are considered normative for U-M lab projects; however the A/E shall give consideration to the nature of materials being exhausted and shall specify appropriate duct materials, construction methods (e.g. gasket and sealant types, etc.), and duct coatings.

> Lab General Exhaust: G-90 galvanized where accessible. Specify plastic coated duct (PCD) in concealed spaces, including shafts.
>
> Chemical Fume Hood Exhaust: PCD from hood to main lateral. If there is insignificant general exhaust flowing through the main lateral, specify PCD for the entire exhaust duct run.
>
> Cage and rack washers, sterilizer and glass washer hoods, and any ductwork carrying moist air: "seal" welded (water leakage tight) 316 stainless steel, from hood to main lateral. Duct shall slope back toward the hood so that any condensate formed in the duct drains away from the main lateral duct. Hoods shall have drain lips, piped to a local floor drain.
>
> Acid Exhaust: Teflon lined stainless steel duct shall be consider in lieu of FRP duct. Note: Obtain concurrence from U-M OSEH that exhaust acidity justifies these specialized materials.

Cage and rack washers shall be exhausted via a dedicated exhaust fan. Therefore the associated duct shall be stainless steel all the way to the exhaust fan, routed as directly as possible, avoiding horizontal runs. TAUs shall not be used.

Construction

Prohibit tie-rod re-enforcement methods for PCD. Prohibit tie-rods in any duct carrying corrosive exhaust.

Exhaust ducts running on the building exterior will typically require insulation to prevent condensation formation inside the duct during cold outside air conditions. Evaluate the need for drains on exterior horizontal exhaust duct work; see "Fan Construction" for additional considerations regarding such drains.

For exhaust duct connected to animal rooms, specify riveted duct upstream of filters.

Fire and/or Smoke Dampers

Not allowed in laboratory exhaust ductwork per NFPA 45.

Exhaust Fans

Fan Capacity

Specify at least 10% additional design flow at the required system static pressure for all lab exhaust fans.

Fan Selection/Number of Fans

For lab exhaust systems over 10,000 CFM capacity, provide 100% redundant standby fans.

For systems 10,000 CFM or less, consider two fans at 50% capacity each.

For all critical exhaust systems, e.g. Biosafety Level 3 labs, provide 100% redundant standby fans.

Cage and rack washers shall be exhausted via a dedicated exhaust fan.

Fan Types

Centrifugal fan systems are preferred, provided it can be shown they safely disperse the effluent. Provide direct drive fans when available.

Direct-drive, high-plume exhaust fans shall be provided on systems above 5000 CFM when no fan redundancy is provided, or when found to be required by dispersion studies.

Location and Design

Exhaust fans shall be located on a roof so that all duct in the building is negatively pressurized. If a roof location is impossible and the fan(s) must be located in a mechanical penthouse or room, design an air tight enclosure around the fan(s) and specify that the discharge duct from

the fan be seal welded. Contact the U-M HVAC/Controls Mech Tech team for additional info on air tight enclosures. Provide windows in enclosures to facilitate maintenance.

The fan stack velocity shall be maintained through the use of normally-closed bleed-in dampers or other means. VFDs on lab exhaust fans to maintain stack velocity or for other reasons are generally not used and if proposed require the review and approval of the U-M HVAC Mech Tech Team.

Orient the fan discharge duct (stack) vertically from the fan outlet. Extend stacks a minimum of 10 feet above the highest local roof. Design the stack to provide a minimum stack discharge exit velocity of 3000 FPM unless a dispersion study demonstrates a lower tip velocity achieves the required dilution target. Stack tips shall be designed to discharge exhaust straight vertically upward without obstruction. Provide designs similar to those recommended by the American Conference of Governmental Industrial Hygenists handbook "Industrial Ventilation - A Manual of Recommended Practice for Design". Rain caps, including those with deflectors, shall not be used.

Fan stacks shall be self-supporting. Guy wires shall not be used without the permission of the U-M Design Manager.

Fan Construction

Fan housings (centrifugal fans) shall be welded construction with a cleanout door.

Typically fans, fan blades, fan plenums, plenum access doors, and fan back-draft dampers should have a Heresite anti-corrosion coating. Specific applications may require different anti-corrosion coatings. It is the A/E/Lab Planners' responsibility to select appropriate coatings. Also specify a heavy-duty coating for the exterior surfaces that prevents corrosion.

Provide a scroll drain for centrifugal fans (drain valve with hose connection). Fans located in enclosures shall have scroll drains piped to the enclosure exterior, with the drain valve and hose bib on the outside, and the drain labeled as a hazard.

Similar to scroll drains, provide drains in exhaust plenums located outside (drain valve/hose connection/cap). Depending on the relative humidity of the space being exhausted, some exterior plenums will require drains that continuously remove routine condensation formation occurring in winter months. Such drains should be routed to termination points inside the building, and be properly trapped. Provide trap primers. Portions of such drains located outside must be heat traced. Similarly, evaluate the need for drains on exterior horizontal exhaust duct work.

Flexible Connectors

On positively pressurized duct work, flexible connectors are prohibited indoors, except for exhaust fans mounted inside enclosures. Fabric flexible connectors shall never be used. One

piece flexible rubber/elastomeric connectors may be used in some low risk applications, with the approval of the U-M Design Manager

Dampers

Motorized control dampers shall be used to prevent back drafting of exhaust fans. Such dampers shall be designed to fail to the "open" position on loss of power. These same dampers shall close when the fan is turned off by normal means.

Motorized bleed-in dampers shall fail to "closed" position.

Damper actuators shall be located outside of the exhaust air stream.

A method of preventing excess negative duct/plenum pressure shall be provided.

Damper construction shall meet or exceed ductwork construction (i.e. protective coating, stainless steel, etc.)

Exhaust Filters

The installation and type of filter in the laboratory exhaust system (if any) shall be determined by the U-M department of Occupational Safety and Environmental Health (OSEH), and for health care facilities in compliance with requirements stated in Minimum Design Standards for Health Care Facilities in Michigan.

Radioactive hoods typically do not require filters.

All exhaust filters shall be provided with a differential pressure gauge to indicate pressure drop across filter.

Exhaust systems with filters that require a specific stack velocity to achieve required dilution targets must include provisions to maintain stack velocities as filters load up.

Exhaust System Fan Control

Exhaust fans shall be controlled by the owners Building Automation/DDC System. See U-M Design Guideline 15975 Mechanical Systems Controls.

Type and Control of Terminal Airflow Units for Labs

In August of 2016 U-M revised its long standing practice of requiring venturi style valves for all laboratory spaces, to only requiring them for labs with VAV or combination sash hoods:

For laboratory spaces which **do not contain VAV hoods or hoods with combination sashes**, (including animal rooms) use conventional terminal air flow units for supply and general room exhaust and venturi style terminal airflow units for constant volume fume hoods and any other constant volume exhaust point. Conventional supply and exhaust TAUs as well as the constant

volume venturi valves are specified in U-M Master Specification Section 233600 Air Terminal Units. The laboratory controls for these rooms, including constant volume fume hood monitors and room differential pressure gauges, are specified in U-M Master Specifiction 230900 Mechanical Systems Controls. *Note that constant volume venturi style TAUs used to serve such rooms must be labeled "CVV Terminal Airflow Units" on the design drawing to match the designation in U-M Master Spec 233600.*

For laboratory spaces which **do contain VAV hoods or hoods with combination sashes** (including animal rooms - rare) use venturi style terminal air flow units for supply, general room exhaust and for variable volume and combination sash fume hoods. Venturi style valves must be used because of the speed of response required for labs with VAV or combination sash hoods. Venturi style valves along with associated controls, fume hood monitors and room differential pressure gauges are specified in U-M Master Specification Section 230910 VAV/Combination Sash Fume Hood Laboratory Controls-DDC. *Note that if constant volume venturi valves are also required to serve spaces with VAV and/or combination sash hoods, U-M Master Specification 230910 requires the contractor responsible for 230910 to supply them.*

Further note that:

- U-M Master Specification **230910** covers **digitally controlled** lab terminal air flow unit controls and is typically used for all new buildings and major renovations.
- U-M Master Specification **230920** covers **analog electronic** lab terminal air flow unit controls and is typically used for smaller renovations where analog electronic air flow controls already exist and it makes sense to reuse them. Generally however projects in such spaces should be upgraded to digitally controlled TAUs. Early in design, consult the U-M Design Manager to establish which type lab controls are to be used for such projects.

Because these U-M specifications specifically address laboratory spaces, it is critical that the A/E clearly delineate on the project drawings which spaces are laboratories.

Sizing fume hood TAUs: See "HVAC and Exhaust Systems Design", above.

Vivarium TAU Sizing: The air valves serving animal holding rooms shall be selected such that air flow to those rooms can be increased an additional 10% minimum, future.

Hood Type: Designate hood type served by each TAU on the architectural/lab plan as well as the mechanical design drawings.

Sash Type: For VAV TAUs, designate if sash is vertical rising or combination type on the design drawings. Combination sashes shall not be used on constant volume hoods.

Sash Alarms: Are to be provided for all hoods. U-M Master Specifications 230900 and 230910 (see discussion above) include fume hood monitor specifications that include the sash alarm features required by U-M.

Air Balancing: Indicate on drawings that the TAU air volume is to be balanced to achieve 100 FPM average face velocity with sash at sash stop position for standard hoods, 70 FPM average face velocity with sash at sash stop position for RFV hoods.

Fume Hood Exhaust Monitor Alarm Setting: Indicate settings on drawings as 80 FPM for standard hoods, 60 FPM for RFV hoods.

Fail Mode: Generally, supply TAUs shall be indicated to fail closed and exhaust TAUs shall be indicated to fail open.

Coatings: Specify Heresite coating (minimum) for TAUs serving chemical fume hoods. Specify other protective coating types, as application dictates.

Balancing Damper: Provide a stainless steel balance damper downstream of all TAUs serving chemical fume hoods, for testing purposes.

Clearances: Utilize U-M Standard Details "Supply Air TAU Clearance Detail" and "Supply Air LTAU Clearance Detail " to indicate required clearances. "Dash out" required clearances at each TAU on the plan views. Require that TAUs be mounted no higher than 2' above the ceiling grid.

Power Requirements for TAUs: Designate circuits in receptacle panels on each floor for TAU power supplies. Work with TAU suppliers to determine the number of 20 amp circuits required. Do not exceed 50 TAUs per 20 amp circuit.

Power Requirements for Fume Hood Exhaust Monitors: Designate circuits in receptacle panels on each floor for Fume Hood Monitors. Work with TAU suppliers to determine the number of 20 amp circuits required. Do not exceed 10 Fume Hood Exhaust Monitors per 20 amp circuit.

TAUs are Prohibited: On exhaust connected to cage and rack washers, due to severe corrosion problems U-M has experienced even when coated TAUs have been provided. A dedicated exhaust fan is required to serve cage an rack washers.

Laboratory Supply Air Diffusers and Registers

Terminal Velocity

Terminal velocity of supply air near fume hoods, bio-safety cabinets, etc., is as important as hood velocity and should preferably be no more than 1/2 the hood or cabinet face velocity (near the hood). Therefore terminal throw velocities in areas with hoods or cabinets should be far less than typical for general lab air supply locations.

Optimize design and layout of supply air devices in consideration of all lab requirements, including velocity, throw and low flow performance.

Perforated Diffusers

To avoid cross draft problems, when supply diffusers must be located near fume hoods or other sensitive cabinets, consider perforated diffuser technology (similar to Titus RadiaTec, VersaTec ,or TriTec) that diffuses supply air at high volumes and low velocity. When RFV hoods are used, Titus VersaTec diffusers shall be specified for the immediate ceiling vicinity near the RFV hood.

Wall Registers

If wall registers are used in labs with hoods or cabinets, they should have double deflection louvers and shall be set for maximum deflection position away from the hood.

First Cost Optimization/Energy Conservation

Comply with U-M Design Guideline SID-D.

Provide fan coils/chilled beams or other strategies to reduce the quantity of "once-through" outside air required for cooling.

In spaces with high once through air requirements (> 6 ACH), evaluate strategies to reduce reheat coil pressure drops, such as larger face area reheat coils or radiant heating panels or floors in lieu of duct reheat coils.

At each phase, the A/E/Lab Planner shall calculate the following and indicate the result in the Design Intent Document:

- Fume hood density per 5000 gsf of building
- Fume hood density per 5000 nsf of lab

Densities above 3 hoods per 5000 gsf shall be justified. Consider alternatives such as snorkels and chemical storage cabinets.

Evaluate the following technologies (also see "HVAC and Exhaust Systems Design", above, for required analysis parameters):

- Variable volume hoods
- Automatic sash closure systems
- Controls to reduce the minimum room air change rate when the lab is unoccupied.

Note: By ruling of U-M OSEH, devices to reduce hood face velocity when users are not standing in front of the hoods, e.g. "zone presence sensors" or other means, SHALL NOT be used.

Evaluate Reduced Face Velocity hoods.

Improve ventilation air flow efficiency by reducing the pressure drop of air system components. The following targets (maximums at full design flow) shall be met for all once through air handlers that will run continuously:

- Air Handler Component Face Velocity: 400 FPM
- Total supply and exhaust duct pressure drop: 2.25 in. w.g.
- Noise Control (silencers) 0.25 in. w.g.

For manifolded exhaust systems, evaluate the energy benefit gained from additional fan staging (i.e., from smaller staging increments), by increasing the number of fans drawing air from common exhaust plenums.

Exhaust Air Heat Recovery: Evaluate heat recovery (enthalpy) wheels, flat plate air-to-air heat exchangers, heat pipes (including pumped type), and run-around coils. Include impact of additional pressure drop through each device type.

Avoid tight temperature and humidity requirements. Normal lab setpoints are:

Summer: 76 dbt minimum, humidity floating but no greater than 60% RH

Winter: 71 dbt maximum, humidity floating but no less than 25% RH.

Setpoints outside these ranges shall be justified in the Owner's Project Requirement/Basis of Design (aka Design Intent) Document.

Measure comparable U-M laboratories to establish HVAC plug/equipment loads during early SD phase, and base the lab design on this measured data. For each comparable laboratory space, obtain 7 days of continuous power metering at the branch circuit panel level of all lab equipment, including plug loads and hard wired equipment, while the spaces are fully occupied. Continuous metering data shall include:

- Apparent instantaneous power
- Real instantaneous power
- Real power averaged over 15 minute intervals

The design heat load criteria shall be based on the 15 minute time averaged Real power draw of the comparable space, unless the lab user group can validate higher heat load requirements. U-M will provide the labor to take the measurements, however the A/E/Lab Planner in conjunction with the U-M Design Manager will identify comparable laboratories and analyze the collected data.

Laboratory luminance levels shall not exceed IESNA Handbook (most recent edition) foot candle levels.

Appendix A

Laboratory Minimum Ventilation Rates (LMVR)

Each lab **room** shall be assigned a Lab Minimum Ventilation Rate (LMVR). The LMVR assigns the minimum air change rates to each lab room based upon an assessment of the potential airborne hazards. This minimum air change rate is the amount of 100% outside air that must be delivered to the space, expressed in air changes per hour (ACH) [1].

The LMVR shall be assigned by U-M OSEH Research, Health, and Safety. The assessment involves a review of potential airborne hazardous materials present, quantities, operations, engineering controls and facility history. Table 1 provides the typical LMVR and other requirements by lab room type, for use prior to U-M OSEH approval. The minimum amount of 100% outside air to be delivered to the lab room shall be the higher of the LMVR or any code (e.g. ASHRAE 62.1) or governing standard's requirement.

There are five LMVR classes ranging from the least hazardous (LMVR 0) to the most potentially hazardous (LMVR 4). Air change rates are provided for both occupied and unoccupied conditions. Where an unoccupied ACH is allowed and implemented, automated methods must be provided to notify lab occupants when the room is in unoccupied mode, and to return the room to the occupied mode air change rate. One method acceptable in many lower risk labs is to set back to unoccupied LMVR based upon occupancy sensors which simultaneously turn lab general lighting off. When the lab is re-occupied, the lights automatically switch back on and the occupied LMVR is reestablished. Local indication, such as by a blinking pilot light near the lab door(s), may be required for higher risk labs. The automatic set back method and occupied/unoccupied indication for each lab room shall be approved by U-M OSEH. Flow rates through fume hoods and similar hazardous exhaust capture devices shall remain the same in both the occupied and unoccupied lab modes.

LMVR 0: No Laboratory Hazards (4 ACH occupied, 1 ACH Unoccupied)

Laboratories in this category have no significant airborne hazards or materials. LMVR 0 typically includes dry research labs, laser labs without gases, electronics labs, machine shops, and fabrication labs, with appropriate engineering controls at low hazard emission sources.

LMVR 1: Low Hazard (6 ACH occupied, 4 ACH Unoccupied)

Laboratories typically in this category are open wet research labs, microbiology, genomics, or proteomics labs with minimal quantities of hazardous chemicals,. Hazardous air emissions may exist but are well controlled with standardized equipment and procedures. Includes standard biomedical research involving CDC Risk Group 1 or 2 agents. Only low hazard compressed gases in small quantities are allowed. A risk assessment of actual conditions of use may dictate a higher LMVR depending on bulk quantities and dispensing methods.

[1]Air exhausted from the space to meet the LMVR must not be recirculated. Supplemental, recirculated, and cooling air does not apply toward ACH.

LMVR 2: Constant Hazard – Constant flow required (6 ACH occupied, 6 ACH Unoccupied)

LMVR 2 labs are relatively low hazard labs. Typical chemical work involves small volumes of solvents, acids and toxic chemicals. Hazardous materials are used with good engineering controls as necessary. Only low-hazard gases are used like CO2 and N2. Well managed clinical labs working with solvent, formaldehyde, and tissue preparation procedures with good engineering controls are included in LMVR 2. Flammable liquid storage rooms are LMVR 2.

LMVR 3: Moderate Hazard (8 ACH occupied, 4 ACH Unoccupied)

Labs working with non-production volumes of many toxic and flammable chemicals and volatile solvents. Use of carcinogens, pyrophorics, acutely toxic materials, sensitizers, and reproductive toxins is in small quantities. Chemistry or pharmacy teaching labs are in this group.

LMVR 4: High Hazard (10 ACH occupied, 6 ACH Unoccupied)

LMVR4 has the highest potential severity of hazards present. LMVR 4 labs typically work with large or production volumes of solvent or corrosives, and/or large quantities of particularly hazardous materials (nanomaterials, chemotherapy agents, highly toxic compounds). Labs working with gas cylinders of toxic, pyrophoric, or flammable gases are included in this rank. Synthetic chemistry and CDC Risk Group 3 biological agents or Select Agents are typically included in LMVR 4. Unique use of hazardous materials, lab equipment, or research fabricated equipment with the potential for air emissions may also be classified into LMVR4.

Table 1:Lab Minimum Ventilation Rate, Pressurization, and Air Flow Control

Room Type	LMVR	Air Flow Control	Pressurization	Comments
Dry Research Labs	0	V	N	
Laser Labs	0	V	N	Without gases
Open Wet Research	1	V	N	Includes both research and teaching type
Microbiology Labs	1	V	N	
Genomics Labs	1	V	N	Including DNA processing type
Proteomics Labs	1	V	N	
Analytical Labs	1	V	N	
Tissue Culture Rooms	1	V	N	Pressure relationship is dependent on project, typically negative.

Linear Equipment Corridors s	1	V	N	And similar equipment rooms
Equipment Rooms with Freezers	1	V	N	
Lab Storage Rooms	1	V	N	Including similar lab support spaces
Autoclave and Dishwashing Rooms	1	V	N	
Flammable Liquid Storage Rooms	2	C	N	
MRI and NMR Rooms	2	V		
Cryogenic Liquid Storage or Dispensing Rooms	2	V		
Animal Holding Rooms: Ventilated Racks	2	C		Pressure relationship is dependent on project. If ventilated racks with rack mounted fan packs are utilized, room air change rates must be as listed for static rack rooms.
Animal Procedure Rooms	2	C		Pressure relationship is dependent on project.
Animal Holding Rooms: Static Racks		C		ACH typically 10 occupied, 10 unoccupied. Pressure relationship is dependent on project.
Chemistry Teaching Labs	3	V	N	
Pharmacy Teaching Labs	3	V	N	
Synthetic Chemistry Labs	4	V	N	
Nano-Labs	4	V	N	
Chemotherapy Labs	4	V	N	
CDC Risk Group 3 Biological Agents or Select Agents	4	V	N	
Laboratories affecting Patient Care in U-M Hospital & Health Center Facilities				See “Minimum Design Standards for Health Care Facilities in Michigan.”

Table Key: LMVR: Lab minimum ventilation rate **C:** Constant Volume **V:** Variable Volume **N:** Negative **A:** Adjustable **P**: Positive

Table Notes:

Table 1 indicates the LMVR, method of air flow control, and room pressurization relative to adjacent spaces, for typical laboratory and vivarium spaces at U-M. The above table is a guide only; requirements must always be validated for the specific project. Air flow control refers

to typical control of supply air to the space and is a generalization; the project must determine the appropriate air flow control for the space.

For variable volume systems, the minimum setting of terminal units (TAUs)shall provide the room air changes per hour (ACH) value indicated by the LMVR designator, or as required by code (ASHRAE 62.1) or governing standard, whichever is higher . Indicate this minimum (CFM) setting on the drawings. The maximum settings, which shall also be indicated on the drawings, shall be as required to account for sensible and latent loads, and for exhaust make-up. Where a unoccupied ACH is permitted by the LMVR designation, such spaces shall, if meeting a 8 year simple payback criteria (SID-D), be provided with methods (e.g. occupancy sensors, etc.) to allow un-occupied setback to the minimum ACH. See the LMVR narrative, above, for additional requirements.

All rooms where bio-hazardous research is conducted shall be designed to provide negative pressure relative to adjacent spaces, and shall include visual pressure indication. Bio-hazardous research is defined as:

A. Recombinant research at BSL 2, 2+, or 3, as classified by the NIH office of Recombinant DNA Activities.
B. Infectious disease research at BSL 2 or 3, as classified by CDC/NIH Biosafety Guideline.

Offices contained within lab areas shall operate as positive with respect to the lab.

Appendix B

Perchloric Acid Fume Hood Systems

Perchloric acid fume hood designs shall be reviewed and approved by U-M Occupational Safety and Environmental Health Department (OSEH). The following are general guidelines. The designer should also adhere to the perchloric hood requirements found in NFPA 45.

Exhaust System:

Provide a dedicated exhaust system for perchloric exhaust. Do not manifold with other exhaust systems (e.g. toilet exhaust, particulate exhaust, etc.).

Terminate vertical stacks no less than 100 feet from an air intake.

Equip the ventilation system with a built-in water wash-down system. Automatic wash-down systems are normally recommended and should be reviewed with the U-M Design Manager and U-M OSEH. Ensure that the system will adequately spray all interior surfaces of the duct, plenum, fan, fan stack, and hood. Additionally, perchloric acid fume hoods shall be provided with wash down nozzles for rinsing the area behind the baffle. Service fitting controls for internal outlets and for the wash-down system shall be external to the hood. Drain(s) shall be provided to catch the wash-down water. The point of drain discharge shall be approved by U-M OSEH. Drain material shall be polypropylene. A backflow preventer shall be provided on the cold water supply to the wash-down system. Provide a frost proof hydrant near the fan/fan stack to allow manual wash-down.

Duct:

Route via the shortest and straightest route possible to the outside, with no offsets or horizontal runs. Provide positive drain back to the hood. Indicate clearly on the design drawings that the contractor may not modify the duct design without written approval from the engineer.

Duct material: acid resistant, non-reactive materials selected for the specific chemical use in the hood; typically shall be all welded 316 stainless steel. For final connections where welded joints are not possible, specify gaskets and sealants that are non-reactive and resistant to perchloric acid. Require 316 stainless steel fasteners or fasteners with corrosion resistance equivalent to the selected duct material. Specify that all duct shall be watertight.

Flexible connections shall not be used.

Provide access to permit visual inspection of duct internals.

Labeling:

Require duct, fans and stacks to be marked as follows:

EXPLOSION HAZARD

Do no service work or inspection on this duct without prior approval from U-M Occupational Safety and Environmental Health Department.

Locate markers near points where ductwork originates or continues into shafts, floors or walls, and at maximum 5' intervals along duct runs.

Fans:

Eductor type fans systems shall normally be used in lieu of conventional fan arrangements.

Specify acid resistant, non-reactive fan materials selected for the specific chemical use in the hood. Teflon or PVC coated blades can typically be used.

Specify Type A spark proof fans.

Specify fan types with fan motors located outside the duct work. Drive belts shall be non-spark conductive type and shall not be located within the ductwork.

Appendix C

Definitions

For definitions of various laboratory chemical fume hood types, refer to U-M Master Specification 115313 Laboratory Chemical Fume Hoods.

Capture Velocity

The air velocity at the hood face or capture device necessary to overcome opposing air currents, and to contain contaminated air within that device.

Face Velocity

Speed of air moving into fume hood entrance or working access opening, usually expressed in feet per minute (FPM).

Hood - Laboratory Chemical Fume

A ventilated, enclosed work space intended to capture, contain and exhaust fumes, vapors and particulate matter generated inside the enclosure. Biological Safety Cabinets are not fume hoods and the two are not interchangeable.

Hood - Auxiliary Air Chemical Fume

A fume hood typically using "raw" outside air for make-up air; should not be used at U-M except by special permission from the U-M Design Manager.

Main (duct) Lateral

Large duct main running on a lab floor with multiple fume hood and general exhaust duct connections such that the large proportion of general exhaust connections is expected to result in a very dilute exhaust air stream.

Make-Up Air (Once-Through Air)

The supply of outdoor air to a building replacing air removed by exhaust ventilation systems.

Seal Welded Duct Joints

Both the longitudinal and transverse duct joints are continuously welded to form a 100% air and water tight seal.

Vivarium

A cluster of animal housing areas and support facilities. Fume hood and other exhaust accessories are often included as part of the design for these facilities, and therefore require special system design considerations.

DESIGN GUIDELINE 230040
HYDRONIC SYSTEMS AND SPECIALTIES

General

This section covers requirements for hydronics systems, including chilled water, hot water heating, and condenser water systems.

Related Sections

U-M Design Guideline Sections:
221113 – Basic Piping Materials and Methods

U-M Master Specification Sections:
221113 – Basic Piping Materials and Methods
232116 – Hydronic Piping Specialties

Design Requirements

Compression/Expansion Tanks

Provide compression tanks on all closed loop hydronics systems. Tanks shall be diaphragm/bladder type, constructed for appropriate design pressure. The tanks should be welded steel, stamped with ASME code Section VIII for appropriate psi design. Indicate system volume, and expansion tank fill and operating pressures on design drawings.

Air Separators

Install air separators to aid removal of air from hot water heating systems and as required for chilled water systems. Separators shall be a tangential type, designed and installed per manufacturers instructions

System Fill and Pressure Relief Valves

The design shall include system fill valve and pressure relief valve with a field adjustable pressure setting.

Balancing and Measuring Devices

All hydronic systems shall have a means of measuring and balancing flow at each piece of equipment and terminal device. Balancing valves shall be sized so they are not closed more than 60% for the flow and pressure expected. Do not base sizing on pipe size alone. If numerous devices are in the project, include a schedule on the drawings.

Automatic Flow Balancing Valves

Installation of automatic flow balancing valves is permitted for terminal devices (coils, finned tube radiation etc.), in lieu of installing manual balancing valves at these locations. Suitability of each application should be carefully considered by the A/E, especially in variable volume systems, and systems where design flow is likely to change and in existing systems.

Strainers and Dielectric Separation

Refer to U-M Master Specification 221113

Glycol Systems

Use of glycol in hydronic systems is generally discouraged due to environmental concerns. Glycol should only be used where other means of freeze protection are impractical. Use only concentrations required to meet design requirements. 30% ethylene glycol is typically acceptable for freeze protection on pumped hydronics systems subject to full winter conditions. Lower concentrations may be acceptable for burst protection or higher design temperature.

Do not provide an automatic cold-water makeup for glycol filled systems. Provide packaged, glycol fill system consisting of polyethylene fill tank (to hold approximately 30 gallons of pre-mixed solution) with hinged cover, fill pump and electric controls. Fill pump is to be energized to maintain system pressure as sensed by pressure switch mounted near compression tank. Provide a two stage low water alarm in the fill tank. The first stage alarms the campus BAS system (or, if BAS is not available, energizes an audible device). The second stage shuts off the pumps and requires a manual reset. Pipe relief valve back to the glycol fill tank.

Make provisions for filling glycol filled systems that ensure reasonable convenience, such that large drums will not need to be lifted up stairs.

Pre-mixed glycol is generally preferred.

Review need for containment with U-M Project Coordinator and U-M OSEH department. At minimum, include a spill pallet below the glycol fill station.

Cooling Tower Water (Condenser Water) Systems:

Tower Water systems generally require installation of side-stream aggregate filters, or possibly centrifugal separators. Consult U-M Project Coordinator. Refer to U-M details for chemical treatment and filters.

Installation Requirements

Expansion tanks and air separators shall be supported independently from piping.

Install air vents at all high points in all hydronic systems. Generally, automatic vents should be installed only in mechanical equipment rooms. All other locations will contain manual vents. Where practical, pipe outlet from automatic air vents to floor drains. Refer to Master specification and standard details.

Flow meters shall be installed with unrestricted lengths of straight pipes as required by the manufacturer.

Install unions, isolation valves and bypass lines on devices requiring removal for maintenance.

Generally, install strainers ahead of all hydronic system control valves, flow measuring devices and pumps.

DESIGN GUIDELINE 230041
PUMPS

Scope

Pump selection. Requirements for the following pump types:

- Domestic boosters
- Storm and sanitary sump pumps
- In-line circulators
- Base mounted end and double suction pumps
- Vacuum pumps
- Steam condensate pumps

Related Sections

Design Guideline Sections:
220000 – Plumbing Design
230040 – Hydronic Systems and Specialties
230050 – Chilled Water Systems

U-M Master Specification Sections:
220523 – Valves
221113 – Piping Materials and Methods
221123 – Domestic Water Booster Pumps
221333 – Packaged Submersible Storm And Sanitary Pumps
230593 – Testing, Adjusting, and Balancing
232123 – Plumbing and Hydronic Pumps

General:

U-M Master Specification Section 221123 shall be used as the basis for domestic water booster pump specifications on projects.

U-M Master Specification 221333 shall be used as the basis for packaged submersible storm and sanitary pump specifications on projects.

U-M Master Specification 232123 shall be used as the basis for plumbing recirculating pumps and hydronic pump specifications on projects.

The A/E shall edit the U-M specification to make it project specific. Turn on hidden text and read all spec. editor's notes when editing the specification.

A/E shall schedule all pump data on the drawings (not within project specifications).

Select pumps and motors to be non-overloading (not into the service factor), at pump run-out (right end of published curve).

Pump efficiency at design conditions should be close to, or left of, peak pump efficiency.

Mechanical seals shall be used on all pumps except fire pumps, where stuffing boxes shall be used.

In general, specify pumps with 1800 rpm motors, unless design condition necessitates alternate motor speed.

Where remote start-stop, or status monitoring is required, use combination magnetic starter or variable speed drive (not manual starter).

Sump Pumps

In general, design sump pumps based on a submersible, duplex pumping system. Include slide rail on all sanitary pumps and on storm water pumps with motors larger than 5 HP, or sumps deeper than 4 feet. Include lifting lugs on pumps, automatic pump alternator and non-mercury float switches. Specify one-point common alarm (indicating high level, pump failure, or seal failure), and connect to Building Automation System.

Base Mounted End Suction Circulating Pumps

Base mounted end suction circulating pumps shall be of the centrifugal single stage type, with back pull-out design. Pump and motor shall be connected through a flexible drive coupling, with safety guard.

Pump and motor shall be properly mounted and aligned on a common, welded, rigid structural steel or cast iron base, with an enclosed perimeter with opening for grouting in place. Base shall be grouted in place.

Base Mounted Double Suction Circulating Pumps

Base mounted double suction circulating pumps, shall be centrifugal, single-stage type with horizontal split case design for servicing the impeller without disruption of the piping. Vertical split case design is also acceptable, where floor space is at a premium.

Provide rigid steel grout base and grout as described for End Suction Pumps section above.

For pumps larger than 30HP, consider need for trimming impeller for improved energy efficiency, following initial testing and balancing. Consult U-M Design Manager.

In-Line Circulating Pumps

In-line circulating pumps shall be single stage; with cast iron body and bronze trim construction, unless special fluid handling dictates otherwise.

Vacuum Pump (Lab and Medical)

Vacuum pumps shall be bronze fitted, or all stainless steel, 1750 RPM and have mechanical seals. Vacuum pump package shall include tank with access hatch and all related controls and piping.

Coordinate equipment selection (rotary vane versus liquid ring) with U-M Design Manager.

System Application Requirements

Consider potential future expansion of pumped systems. Extent of expansion will be determined on a case-by-case basis. Consult with the U-M Design Manager for specific direction.

Domestic Water

Provide all bronze lead free construction or stainless steel construction for all domestic water pump applications.

Storm and Sanitary

Use submersible sump pumps as described in Sump Pumps, above.

Hydronic Systems (Chilled Water, Condenser Water, Hot Water Heating)

Use end suction, double suction or in-line pumps as described in Equipment Requirements above. Typically, use base mounted pumps for all applications over 10HP.

Install fully redundant (N-1) stand-by pumps for heating systems.

For chiller and cooling tower installations, refer to Design Guideline Section 230050.

Steam Condensate Pumps

Typically, use electric condensate pumps for steam condensate. Consider use of air operated condensate pumps (only with U-M Design Manager approval) in steam tunnels, or other spaces with high condensate temperatures.

Design of condensate pumping system must consider receiver size, location, NPSH, flash area, and receiver and flash tank venting (properly sized, routed to outside).

Installation Requirements

Install pumps and accessories in strict accordance with the manufacturer's requirements for maintaining satisfactory hydraulic performance.

Provide the following accessories for each pump (except sump pumps):

- Flexible connector, rated 2 times normal operating pressure, in suction and discharge lines. Refer to U-M Master Specification Section 221113. Flexible connectors are not

typically required on in-line pumps (allowing pumps to be supported from adjacent piping).

- Isolation valving on both sides of the pumps. Not applicable for sump pumps. For condensate pumps, suction valve must comply with U-M Master Specification Section 220523.
- On pump discharge:
  - Triple duty valve and an isolation valve, or
  - Non-slam check valve, throttling valve, means of measuring flow, and isolation valve. Install flow measuring devices in strict accordance with manufacturer requirements to ensure proper performance. Throttling valve shall be eliminated on variable flow (VSD) pumping applications.
- Pressure gauges on suction (prior to and after strainer) and discharge. For small, in-line pumps, pressure-temperature plugs may be used in lieu of gauges. Typically, these three points should use manifolded ½" piping, with isolation ball valves and a single, common gauge.

Provide the following accessories for each sump pump:

- Flexible connectors are not typically required on sump pumps, except where vibration necessitates.
- Pressure gauge, check valve and isolation valve on pump discharge. Separate throttling valve is not typically required.

Provide vibration isolation as necessary to prevent excessive noise and vibration. In general, install large pumps located above grade on concrete inertia base with spring vibration isolators. Where an inertia base is used, support piping near pumps with spring hangers. Support suction diffusers and piping directly in contact with pump from inertia base.

Suction inlet pipe for all pumps should be a straight section of pipe of not less than 10 pipe diameters in direction of flow. Where space conditions will not permit suction inlet pipe of required length, provide a suction diffuser.

Base mounted pumps shall be laser aligned. Typically, this should be specified as part of factory service technician start-up services.

For vibration testing requirements, refer to U-M Master Specification Section 230593.

DESIGN GUIDELINE 230050
CHILLED WATER SYSTEMS

General

The designer shall consult with the U-M Design Manager and Plant Operations before making decisions on chilled water system type and configuration.

Related Sections

U-M Design Guideline Sections:
230051 – Water Chillers
230052 – Cooling Towers
SID 4.6 - University Provided Utilities
Sustainability 3.2 Energy Conservation

U-M Master Specification Sections:
232116 – Hydronic Piping Specialties
236416 – Centrifugal Water Chillers
236500 – Cooling Towers
230900 – Mechanical Systems Controls
232513 – Chemical Water Treatment – Closed Loop
232516 – Chemical Water Treatment – Open Loop Systems

Chiller Plant Sizing, Redundancy, Diversity, Future Growth, Emergency Power

Calculate systems loads based on connected load (total of scheduled load at design condition) and peak diversified load (anticipated or measured actual peak load within a building or system that reflects diversity between loads). Base system sizing on peak diversified load (PDL). Consider potential need for future growth when calculating PDL.

Consider need for system and equipment redundancy. For critical laboratory and animal facilities and for multiple building chiller plants provide plant with multiple chillers to provide "N-1 redundancy" (capacity that can meet PDL with largest chiller, pump or cooling tower out of service). For single building chiller plants, the design shall provide at least, sufficient redundancy for the critical portion of the facility.

For building areas such as vivaria or certain hospital areas, requiring cooling operation during power outage, consider providing a smaller chiller connected to emergency power.

Redundant pumping shall be considered normal for all installations. For multiple chillers, design systems to provide a single redundant condenser water pump and a single redundant chilled water pump that can be manually valved into service for the other pumps of the same service.

Chilled Water Configuration

In general, design systems with constant volume primary chilled water (through evaporator), with a decoupled variable flow secondary, with distribution based on two-way valve control of cooling coils. The decoupler pipe shall be sized to handle the full flow of the largest chiller. Chiller staging shall be via decoupler flow volume. For chiller plants of less than 1000 tons aggregate, serving a single building, variable volume primary systems may be considered with the approval of the U-M Project Coordinator, given a proper volume-controlled bypass arrangement is provided to maintain minimum chilled water flow at the evaporator.

For multiple building chilled water plants, design should normally indicate primary pumping, secondary distribution variable pumping and tertiary building pumping. The tertiary design should indicate a decoupled pumping arrangement with a modulating valve in the secondary return leg, which will maintain the tertiary at +1°F above the distribution temperature. For plants that serve newer buildings, design for a minimum distribution temperature differential ("delta T") of 15° F (eg. 44F CHWS/ 59F CHWR). For plants serving existing buildings, the existing coil performance must be considered when defining system temperatures.

Design for Maintenance

Design piping and machine placement so that complete machine overhaul, including motor replacement, may be performed without the removal of permanent piping. Provide permanent steel rail hoistways or other approved measures for this purpose.

Where possible, locate chiller plant to minimize future work that will be required to replace the chiller.

Design for Cleaning/Flushing

Design system (include appropriate connections, etc.) such that, during construction, pipe cleaning and flushing can be conducted without contamination of the chiller. Design shall require provision of conical startup strainers at the chiller inlets and fine mesh pump startup strainers. Design shall incorporate temporary bypasses of cooling coils to avoid fouling coils during flushing and cleaning.

Water Treatment

Refer to U-M master specifications and guidelines. For systems over 400 tons, the design shall include chemical bulk storage adequate for a two month supply of chemical treatment and shall indicate a piping system for filling from a convenient grade-level loading area. Bulk systems shall be provided with double- wall storage vessels or other approved packaged base containment method. For smaller systems using 55 gallon chemical barrels, design shall include containment via a low, beveled curb that will allow wheeled hand truck passage along its length for barrel movement.

Strainers and Filtration

Basket strainers shall be provided for all cooling tower systems. In addition, provide coalescing type solids separators. Provide combination coalescing solids separator/air separators on the chilled water system. Sidestream separators shall be sized for at least one third of the full system flow.

Free Cooling and Winter Cooling

Where there is a significant winter chilled water load, consider "free cooling" (making winter chilled water utilizing a cooling tower and a plate-frame heat exchanger). Provide life cycle calculations in accordance with the Special Instructions to Designers (SID-J) Energy Conservation section. In addition to energy savings, free cooling can minimize low load short cycling. Filtration and wet-bulb approach controls shall be part of such a system.

Winter-operated cooling towers and outdoor piping shall be winterized in accordance with the Design Guildeline section 230052 - Cooling Towers. Heat-trace systems shall be DDC controlled and monitored; separate programmable controllers are not permitted. Where winter chilled water demand is less than that practical for free cooling, provide a smaller indoor air cooled chiller with remote condenser connected in parallel with the larger chillers.

Drained Condenser Water Piping

If condenser water piping is intended to be drained down during off-season, consider the use of non-ferrous piping (stainless steel schedule 10 or other) for that section of piping to be drained to eliminate off-season corrosion of empty piping. Make provisions in the design (sight glasses and testing ports) so that risers within the building may be tested to insure treated water is present year-around.

Chiller Room Noise and Vibration

Consider noise and vibration criteria in mechanical room and adjacent area. Specify machine noise and vibration limits, and specify testing procedures. Evaluate the need for noise and vibration abatement to achieve acceptable noise levels.

Controls

Use of U-M standard control diagrams and sequences is preferred.

Chillers enable, start/stop functions, sequencing, cooling tower operation and secondary pumps shall be controlled by the Building Automation System (BAS). Use of proprietary chiller or pump control packages is not permitted. Generally, primary chilled water pumps and condenser water pumps are started and stopped by the associated chiller, but where redundant pumps are provided, using BAS to start pumps can be considered.

The design shall indicate manual selector switches, providing digital inputs to BAS, located at an auxiliary panel near the chillers for the following functions:

- Select lead/lag chillers sequence.

- Where BAS starts the pumps, to functionally connect the backup pump with the applicable chiller.

Cooling tower filter or separator blow down valves shall be controlled as the first stage of tower blowdown via the water treatment panel.

Generally, absorption chillers system design shall provide fixed constant condenser water temperature per design setpoint. Centrifugal systems design shall provide condenser water temperature reset; the chiller control panel shall generate a standard 4-20ma linear reset signal output to the BAS. BAS will reset condenser water setpoint, indexed against outside air wet bulb temperature.

Water cooled chillers or chiller groups shall have full-sized condenser water three-way valve bypasses of the cooling tower. Two way valves may only be utilized where specifically approved. The valve shall be controlled by the BAS with pneumatic controlled back up. For combination absorption and centrifugal chiller plants, separate three way bypasses shall be designed to provide higher fixed temperature to absorption and resetable lower temperature to centrifugals.

Control of water treatment shall be by the specified water treatment controller, which will report conductivity to the BAS.

Metering

Metering required:

- Cooling tower make-up water metering and cooling tower blow-down metering shall be in accordance with the City of Ann Arbor requirements and these standards. Meter cooling tower makeup water separately from the building service.
- For a chilled water plant serving multiple buildings, all utilities and services serving the generation of chilled water shall be metered separately from the building in which it resides.
- Each separate building using central plant chilled water shall have chilled water BTU load metering via a magnetic flow meter in conjunction with a BTU meter and sensors with matched calibration in accordance with the U-M Master Specification section 230900 - Mechanical Systems Controls.

DESIGN GUIDELINE 230051
WATER CHILLERS

General

Refer to SID-J, University Provided Utilities, for application of steam absorption chillers on Central Campus. Centrifugal chillers are the standard application for other campus areas. On Central Campus, generally capital replacement of absorption chillers shall be with like absorption chillers. Electric water chilling may be used for new loads.

Consult with the U-M Project Coordinator and Utilities and Plant Engineering before making decisions on chiller type. The following are general criteria:

- Air cooled packaged chillers: 100 tons and smaller.
- Water cooled screw chillers: 100 to 200 tons.
- Centrifugal and steam absorption chillers: 200 tons and larger.

Related Sections

U-M Design Guideline Sections:
230050 – Chilled Water Systems
SID 4.6 - University Provided Utilities
Sustainability 3.2 - Energy Conservation

U-M Master Specification Sections:
230930 – Refrigerant Detection and Alarm
232513 – Chemical Water Treatment-Closed Loop
232516 – Chemical Water Treatment-Open Loop
236416 – Centrifugal Water Chillers
236500 – Cooling Towers

General Requirements

Unless directed otherwise, utilize the following U-M specifications as the basis for chiller specifications on projects. The A/E shall edit the specifications to make them project specific. Turn on hidden text and read all spec. editor's notes when editing specifications.

230930 – Refrigerant Monitoring System

232513 – Chemical Water Treatment-Closed Loop

236416 – Centrifugal Water Chillers

The capacity of the machine shall be based on Standard ARI-550-98 fouling factors for the evaporator, absorber and condenser sections, as stated in the U-M Master Specification.

Normally, for centrifugal and absorption machines, marine water boxes shall be specified for condenser and evaporator. Provide accessory davit arms or hinged covers for both evaporator and condenser boxes. Where marine boxes are not feasible, design shall indicate removable spool pieces between isolation valves and chiller heads, which when removed allow tubes to be pulled or cleaned. Design shall include permanent means to hoist and remove heads and spool pieces.

Chiller or chillers shall be sized to operate efficiently over the full range of the system load profile. Special caution shall be exercised to avoid sizing that results in short cycling in low load ranges. Multiple chillers shall be used if the load profile indicates that short cycling (cycling greater than 30 occurrences during a low load day) will occur. Multiple chillers shall be used in any installation of greater than 600 tons.

For small air-cooled chillers, consider providing an indoor chiller with remote condenser or dry-cooler in lieu of roof top chillers. Air cooled chillers operating year-around shall be rated for partial load performance at -10 F°. Chillers exposed to the outside air shall be designed with antifreeze water treatment for operation down to -10°F.

Chillers shall include manufacturer's standard digital control panel. BACnet panels and interfaces shall be provided only when specifically requested by Plant Operations.

Differential pressure switches for chiller proof of water flow shall be specified, not flow switches.

Provide life cycle cost analysis to evaluate chiller options. Contact Utilities and Plant Engineering for maintenance and utilities costs. Determine the system load profile. Evaluate alternative chiller assemblies. Investigate energy-saving opportunities where additional initial investment produces an acceptable payback in accordance with SID-D Energy Conservation. Consider providing variable speed drives (VSDs) for centrifugal chillers where the load profile exhibits an opportunity for acceptable payback. Use of VSDs on chillers must be approved by U-M Design Coordinator. For chillers larger than 200 tons, the specification shall require the manufacturer to provide, as part of their bid, annual energy usage based on a defined load model or ARI standard conditions, as applicable.

Normally chillers above 200 tons should be separately purchased and assigned to the mechanical contractor for installation. This allows the AE and the University to evaluate the chillers bids from a total (life cycle) cost perspective. U-M shall participate with the AE in chiller post bid evaluations, including attendance at post bid meetings.

Consider noise and vibration criteria in mechanical room and adjacent area. Specify machine noise and vibration limits, and specify testing procedures. Evaluate the need for noise and vibration abatement to achieve acceptable noise levels. See UM Master Specification for performance testing required after installation.

Mechanical Refrigeration Chillers

Centrifugal chillers should be specified to use HCFC-123 or HFC-134A (bidder's option). Screw chillers shall use HCFC-22.

Design and specification shall indicate each chiller to be provided with reseating relief valves and rupture discs. Vent the relief to the outside. Each resetting relief valve shall be designed to provide a digital input (contact closure) to the Building Automation System (BAS) on rupture.

For chillers over 300 tons, unless the chillers are installed near a convenient on-grade entrance, provide pump – down refrigerant reclaim tank and piping with capacity equal to 110% of the largest chiller in the installation.

For low pressure chillers, provide hose connections and power outlet for portable "hot pack" unit (to allow chiller to be heated to positively pressurize for service). Coordinate with U-M Project Coordinator as to whether a portable hot pack unit should be furnished with a new chiller installation.

When removing a chiller, specify and coordinate the removal of refrigerants by Plant Operations - Air Conditioning Shop, per EPA standards.

Specify that the chiller manufacturer conduct a full load factory performance acceptance test for each chiller and provide a certified test report for approval. Indicate that the capacity tolerance shall be zero and the allowable tolerance for other performance measurements shall be per ARI 550. Specify that the chiller not be shipped until the report is approved by the owner. Witness of testing by the owner shall be at the discretion of the owner with all travel expenses paid by the owner.

Specify that the chiller be provided with, on the control panel, a separate Hand-Off-Auto (HOA) switch which will allow selection of remote chiller start/stop or local start/stop. Specify that when the HOA is placed in off or hand, remote signaling shall not be able to control the chiller. Keypad activation is not permitted as a substitute for this function.

Provide refrigerant leak detection and ventilation in accordance with current standards and codes, including ASHRAE 15, Safety Code for Mechanical Refrigeration.

Steam Absorption Chillers

Absorption chillers shall be of hermetic design, factory assembled and leak tested, and selected for 5 psi steam at the inlet to the steam control valve. Unit shall be trimmed to 5 psi. Steam shall be controlled by low pressure drop control valve, limited to maximum 1 psig. The control will be a pressure independent control valves system, controlled by the unit control panel, which will permit operation of the unit at varying pressures (5-15 psig) without going into anti-crystallization mode at higher pressures.

If the unit is supplied with an anti-crystallization device such as a positive concentration limiter (PCL) valve, it must be provided with a factory installed manual bypass switch.

The unit shall be charged at the site with lithium bromide solution with chromate inhibitor or York's Advaguard 750. The lithium bromide solution shall be delivered to the site in approved containers and installed by the manufacturer at the site. The inhibitor shall be premixed into the solution before it is charged into the machine.

Tube wall shall be 0.028" for absorber, evaporator and condenser, and 0.035" for generator. The machine shall be supplied with 95/5 cupro-nickel tubes in the absorber, 90/10 cupro-nickel tubes in evaporator and generator, and 100% copper in the condenser section.

Pay particular attention to the manufacturer's requirement for minimum required vertical drop in the condensate piping between the concentrator outlet and steam trap inlet and proper pitch of the entire machine. Condensate lifting at the outlet of the machine is not permitted.

Instruct Contractor to arrange for a representative from the Plant Department through the University Project Coordinator to be present when the machine is initially charged with lithium bromide and water.

When an existing absorption chiller is to be removed, the lithium bromide is to be removed and legally disposed of by the contractor, with associated hazardous waste manifests filed with the U-M Project Coordinator and OSEH.

Specify that the chiller be provided with, on the control panel, a separate Hand-Off-Auto (HOA) switch which will allow selection of remote chiller start/stop or local start/stop. Specify that when the HOA is placed in off or hand, remote signaling shall not be able to control the chiller. Keypad activation is not permitted as a substitute for this function. Final trimming of absorption chillers by chiller manufacturer shall be done in conjunction with U-M Plant Operations and the Test and Balance contractor under full load conditions at the chiller. Since chiller start-up does not typically take place during peak cooling season, contractor must develop, assisted by the commissioner, a plan to fully load the chiller, either by imposing a false load or waiting to complete the contractually required trimming until a natural load can be developed. After the manufacturer trimming has been completed, manufacturer's representative shall perform final performance verification, measuring and document chiller performance under full load, witnessed by the commissioner.

DESIGN GUIDELINE 230052
COOLING TOWERS

General

This section covers requirements for forced draft and induced draft cooling towers, and related system and component requirements.

Related Sections

U-M Design Guideline Sections:
230050 – Chilled Water Systems

U-M Master Specification Sections:
232513 – Chemical Water Treatment-Closed Loop
232516 – Chemical Water Treatment-Open Loop
236416 – Centrifugal Water Chillers
236500 – Cooling Towers

Design Requirements

Unless directed otherwise, utilize the following U-M specifications as the basis for cooling tower specifications on projects. The A/E shall edit the specifications to make them project specific. Turn on hidden text and read all spec. editor's notes when editing specifications.

232513 – Chemical Water Treatment-Closed Loop

232516 – Chemical Water Treatment-Open Loop

236500 – Cooling Towers

Use 78°F for design entering wet bulb conditions.

Cross-flow induced draft towers are preferred over forced-draft type towers due to energy consumption and ease of maintenance.

If a job requires a forced draft tower, provide adequate space for fan shaft removal.

Make provisions to protect the fill from higher temperatures on absorption chiller applications. Indicate in control sequences to shut the chillers and condenser water pumps.

Fan drive(s) should be through drive shafts and gear reducers, with motor mounted outside of the air stream. Include external oil lines and dip stick. The University discourages the use of V-belt drive cooling towers. If V-Belt drives are used, provide non-ferrous sleeves.

Cooling tower fans shall be driven by a variable speed drive.

Refer to “Editor:” notes in the Master Specifications for access platforms and handrails.

Designer shall review need for vibration isolators with the University Project Coordinator.

For winter operation, a remote, indoor sump or tank is preferred (dry cooling tower sump). Where wet cooling tower sump is used for winter operation, provide basin heater and heat tracing for all outdoor piping. Direct steam injection basin heaters are preferred. Used electric sump heater if steam is not available. Heat tracing may be steam or electric.

Cooling tower located on roof shall be supported on roof steel to provide a minimum clearance of 3 feet to the bottom of steel, to enable roof maintenance and replacement.

Acoustic testing and analysis is typically required for all cooling tower installations. Consult Project Coordinator.

Provide accessible basket strainer at inlet to cooling tower.

Designer shall account for derating factors associated with screenwalls, and reentrainment.

Pipe cooling tower overflow/ drain to sanitary waste. Discharge directly to roof is not acceptable.

DESIGN GUIDELINE 230060
MECHANICAL SOUND AND VIBRATION CONTROL

General

Sound and vibration shall be carefully evaluated on all projects, for both interior and exterior impacts.

Related Sections

U-M Design Guideline Sections:
230010 – HVAC Design

U-M Master Specification Sections:
220548 – Vibration Control
230593 – Testing, Adjusting and Balancing

Sound Design Requirements

Interior Sound Impacts

Typical space noise criteria levels are listed in Design Guideline 230010. For NC/RC levels not listed in that section, levels shall not exceed those listed in Chapter 46 of the ASHRAE HVAC Applications Handbook (most current addition).

NC/RC levels are a general design criteria only. Spaces where sound is of a special concern, such as large lecture halls, theaters, etc., shall be evaluated using more rigorous criteria based on recognized guidelines. Criteria should be reflected in Design Intent Document and/or in Construction Documents.

For new buildings or major renovations, a study by an acoustical consultant should normally be performed. This study should determine expected sound levels for major space types and, where expected levels exceed established criteria, provide project specific alternative solutions. All significant sound impacts shall be evaluated, not just from mechanical and electrical equipment sources; for example, the impact of a large number of people walking on a hard surface that is located over a more sound sensitive space. For renovation projects, the study should include sample testing of existing areas.

For sound control, low cost solutions are the preference in lieu of more conservative solutions, in particular for spaces without special sound concerns. For instance, the use of acoustical flex duct (not to exceed 5') is preferred over equipping all VAV/CAV boxes with sound attenuators. Noise generating equipment should be located outside of more sensitive areas, i.e. over corridors, when possible, etc.

Duct sound liner shall not be used unless protected by a solid or perforated metal liner. Sound liner protected by perforated metal shall in addition be wrapped with an approved flexible liner. Unprotected duct liner may only be used for short transfer duct applications.

Schedules shall indicate the maximum NC levels (sound power) for terminal boxes, diffusers, lab air valves, and similar equipment. Fan and sound attenuator schedules shall indicate the sound power and attenuation levels required in each octave band. Sone levels may be listed for small fans in lieu of octave band levels.

For new buildings or very large renovations, sample sound readings (NC and dBA) for typical spaces should be taken on a post construction basis, to verify if NC levels were achieved. This testing can typically be done by the Test and Balance contractor. More extensive post construction evaluation tests should normally be performed for areas with very special sound concerns, eg. theaters, auditoriums. Further, if these special spaces were renovated, pre-construction sound readings should be taken for comparison to post construction sound levels.

Floating floors should be considered for major mechanical rooms located over sound sensitive areas.

Exterior Sound Impacts

All new construction shall be assessed for exterior sound impacts on surrounding neighborhoods. The normal UM policy is that buildings are not to contribute a perceptible increase to the ambient noise environment. In terms of human perception, a 3 dB change (or less) would typically be considered imperceptible. However the specific characteristics of exterior sound sources shall also be considered, i.e. frequency and reverberant effects, time of day cycling, etc. In no event shall City of Ann Arbor noise guidelines be exceeded. For new buildings or improvements to existing buildings involving the addition of significant sound generating mechanical or electrical equipment to the building exterior, a study by an acoustical consultant should normally be performed. Such studies shall assess sound impacts and, where required to meet the above criteria, provide alternative project specific solutions. Such a study would typically require pre-construction field measurements of existing ambient noise levels to set baselines.

Vibration Design Requirements

Vibration impact and control shall be evaluated for specialized fixed equipment, such as MRIs, as well as building mechanical and electrical equipment.

Vibration Criteria

The maximum allowable vibration levels in the horizontal, vertical, and axial planes for building equipment shall be specified as follows:

Pumps	0.13 in/s RMS
Centrifugal Compressors	0.13 in/s RMS

Fans (all types)	0.09 in/s RMS
Chillers	mfg. recommendation.

Specify that all equipment over ½ HP be field vibration tested. Specify that equipment found to exceed the allowable vibration levels be repaired and retested until within allowable limits, at no cost to the owner.

Vibration Isolation

The minimum vibration isolation required for mechanical and electrical equipment shall conform to the Selection Guide for Vibration Isolation, ASHRAE HVAC Applications Handbook (most current addition).

For spaces with special vibration concerns, eg. clean rooms, theaters, certain medical or research equipment rooms, etc., an acoustical/vibration consultant should be utilized to assess impacts and recommend solutions. During project programming, ambient vibration levels should be recorded if vibration sensitive equipment is planned for buildings adjacent to significant vibration sources, i.e. heavily traveled roads. The results of these tests may dictate that special isolation be provided to accommodate sensitive equipment.

Unless specifically waived by the U-M design coordinator, large pumps and fans installed above grade shall be specified with inertia bases.

Avoid the blanket specification of expensive spring type vibration hangers for piping and duct. Typically when flexible connectors are employed at duct/pipe connections to equipment and the equipment base is properly isolated, spring hangers are only recommended for the first two hangers.

DESIGN GUIDELINE 230593
TESTING, ADJUSTING, AND BALANCING

General

This design guideline describes use of U-M's Test Adjust and Balance (TAB) specification, TAB design considerations, minimum TAB data to be shown on design documents, and the contracting of TAB work.

Related Sections

U-M Design Guideline Sections:
230030 Laboratory Ventilation Design

U-M Master Specification Sections:
230593 Testing, Adjusting, and Balancing
230910 Lab Air Flow Controls-DDC
230920 Lab Terminal Air Flow Units & Controls

TAB Specifications

U-M Master Specification Section 230593 Testing, Adjusting, and Balancing shall be used as the TAB specification on all projects. The A/E shall edit U-M TAB spec. 230593 to make it project specific. Turn on hidden text and read all spec. editors notes when editing the specification.

Pay special attention to the following when revising the spec. to make it project specific:

- Scope of Work Section: Remember to include systems such as domestic hot water return, RO/DI, and process cooling water systems, if TAB work is required on such systems.
- Acoustical Testing Section: Describe the requirements for any needed special accoustical testing. This section also requires sound readings be taken in 6 rooms designated by the AE. It is recommended this requirement always be left in the spec. in case any noise trouble shooting is needed after construction is complete.
- Performance Testing Section: If required, include specific details regarding the tests required.

Review and edit as appropriate, the balancing procedures included in the specification, and add any additional procedures required for unique or complex systems (e.g. BSL3 labs, clean rooms, etc.). If requested by the construction team, participate in the pre-balance conferences described in the spec. to explain the design intent and answer questions about the appropriate TAB procedures.

Be aware that the U-M TAB spec requires submittals relative to the TAB work, including proof of TAB technician qualifications, TAB instrument type and calibration, and proposed reporting forms. The AE must approve these submittals prior to any TAB work commencing.

The U-M TAB spec. requires equipment vibration testing for all rotating equipment ½ HP and larger. If a project is limited to one or two pieces of small horsepower equipment in low risk areas such testing becomes cost prohibitive and the AE should strike it from the spec. Vibration testing should always be included on projects with large equipment or significant rotating equipment quantities.

Note that the U-M TAB spec does not cover ASHRAE 110 fume hood testing.

Note that the U-M TAB spec requires that progress TAB reports be submitted within 3 days and final TAB reports within 1 week of the completion of TAB field work.

Pre-Construction TAB Work

When appropriate, require the TAB trade to perform pre-construction and post-construction TAB work, in particular when spaces are renovated, to measure representative flows, pressures, and/or temperatures of other areas served by common systems. In some cases it may be appropriate to issue a separate contract for pre-construction TAB work.

TAB Design Documents

All required TAB data shall be clearly indicated on the design documents, including the following:

- Code minimum outside air CFM for each air handler
- Air handler supply fan/ return fan/exhaust fan CFM offset (as it relates to building pressurization)
- Dirty filter pressure drops
- Fume hood face velocity alarm point
- Room pressure offsets for rooms designed with CFM offset. Indicate the amount of offset (in CFM) with an arrow pointing in the appropriate direction, across each of the room's doors. Note that the U-M TAB spec. requires smoke-stick tests to validate the offset direction at these room types
- Room pressure offsets for rooms controlled to a setpoint (e.g., to an inches w.c. setpoint) (list on control drawings).

The scope of the TAB work shall be clearly delineated in the design documents. As appropriate, require that the entire system in a renovation project be rebalanced, in particular to assure un-renovated areas are not adversely affected by new work. Include the TAB data for both the new and unaltered portions of the system.

Note that proper architectural patching of room penetrations will be required for any room with pressure offset. The mechanical engineer is advised to assure the project documents thoroughly cover this requirement.

TAB Contracting

The University of Michigan limits TAB work to pre-approved contractors. These contractors are listed in the U-M spec. The AE shall not add or delete from the contractors listed in the spec. unless directed otherwise by U-M.

The preferred and best practice is for the TAB trade to be under contract direct to the Owner rather than as a sub-contractor to another trade. Discuss the TAB contracting arrangement with the U-M Project Manager and prepare bid documents as directed.

Air and water balance should always be done by the same TAB contractor, and is a requirement of the U-M TAB spec. If a project is so large that multiple TAB contracts are required, the scope of work split should be by building area, with one contractor doing all air and water balance for a specific area, and for all systems that serve that area. Splitting all air to one TAB contactor and all water to another TAB contractor significantly dilutes the efficacy of the TAB procedures and is never advisable.

DESIGN GUIDELINE 230900
MECHANICAL SYSTEMS CONTROLS

Related Sections

U-M Design Guideline Sections:
SBA 5.11 - Fire Command Center
DG230030 - Laboratory Ventilation Design
DG230930 - Refrigerant Monitoring Systems

U-M Master Specification Sections:
MS230900 - Mechanical Systems Controls
MS230910 - Lab Air Flow Controls-DDC
MS230920 - Lab Terminal Air Flow Units & Controls

U-M Standard Details:
15635001 - Refrigerant Monitor Control Diagram
15975001 - Differential Pressure Transmitter Installation Detail (Liquid)
15975002 - Typical DDC Panel Assembly

General

This Design Guideline does not apply to laboratory and fume hood air flow controls; see Design Guideline 230030 for these systems.

Direct digital controls (DDC) are the standard for control at U-M. Pneumatic or other non-DDC controls are limited to very small systems and shall only be specified with the Design Manager's permission.

U-M Master Specification Section 230900 Mechanical Systems Controls shall be used as the controls specification on all projects. The A/E shall edit U-M Master Specification 230900 to make it project specific. Turn on hidden text and read all spec. editor's notes when editing the specification.

> Note that generally the U-M controls specification should only have items *added to it* to make it project specific (e.g. a meter which is peculiar to the project and not already covered in the spec.), otherwise it is recommended that the A/E *not* delete materials or devices from the specification.
>
> Exception: If the typical work scope split described below under "U-M vs Contractor Work Scope" is *not* to occur, the A/E will need to edit Part 1 and 3 of the specification to make the work scope split specific to the project. While rare, such editing may be required for certain non General Fund auxiliary unit projects such as for Athletics. Consult the U-M Design Manager.

U-M has an extensive Building Automation System (BAS) that networks to localized DDC controls. This system utilizes propriety Siemens components as well as non proprietary generic controls. UM has negotiated pricing for the proprietary components and purchases these direct from Siemens for projects. U-M also self performs a portion of the DDC control work. Project budgets must (also) include the cost of the proprietary components and U-M's self performed work. During budget planning, the U-M Design Manager will provide information regarding how these costs are to be accounted for in the budget.

U-M vs Contractor Work Scope

The A/E should consult the first few pages of U-M Master Specification 230900 for detailed information regarding the split of control work, university versus contractor. By utilizing U-M's control specification, proper work scope split occurs automatically and is essentially transparent to the A/E design effort. Note that non General Fund auxiliary units may handle controls differently; always consult the Design Manager. In general, the split is as follows:

University of Michigan: Provides proprietary DDC panels, terminates inside these panels, and programs and starts-up the DDC panels. Provides application specific terminal equipment controllers (TECs) for contractor installation (e.g. DDC VAV box controllers) and room sensors for TECs.

Contractor: Supplies and installs: all field devices (transmitters, actuators, control valves, control dampers, transducers, etc.), all control wiring and tubing, all auxiliary control panels, and prepares a complete controls submittal. Mounts U-M supplied DDC panels. Installs TECs and TEC room sensors.

The detail "Typical DDC Panel Assembly" provides a graphical representation of the work split.

Using U-M Master Specification 230900

The A/E shall use U-M Master Specification 230900 as the basis for the control specification and edit it to make it project specific.

When editing this spec, assure hidden text is tuned "on" and carefully review all spec editor's notes.

Special attention should be paid to the following articles:

- Article 1.3: Edit the list of acceptable controls contractors in consultation with and as approved by the Design Manager.
- Article 2.2: Obtain approval for the type of steam condensate meter to be used, and then edit the spec accordingly.
- Article 2.3: U-M supplies application specific TECs for DDC terminal (VAV, CAV, etc.) boxes. The controls contractor is responsible for mounting these TECs on the boxes. The A/E must edit his specification for such boxes to assure the box manufacturer only supplies the components listed in article 2.3 (e.g. pneumatic damper operator and air flow arrays), NOT DDC controllers. *On the rare occasion pneumatic*

VAV box controllers are used, specify that the box manufacturer provide a Krueter model CSC-3011 controller, a normally open damper, and a damper operator.

- Article 2.6: If electrical actuators are used, power for these actuators must be accounted for on drawings. Read the spec editor's note in this article for further direction.

The U-M master specification includes specifications for most types of control components. In some cases the A/E will need to add supplemental specifications for atypical components.

Control or automatic dampers (actuated dampers) are specified in Master Specification 230900. The A/E's specification should include no other control damper specifications, and specification sections requiring factory provided control dampers, e.g. air handler specifications, shall reference Master Specification 230900 for the control damper spec.

Control Drawings

The required scope of a project's controls shall be indicated by the use of control drawings. Each control drawing shall include a detailed sequence of operation.

Control drawings and sequences shall appear on the mechanical drawings; they shall not appear in project specifications.

Control drawings shall utilized U-M's standard controls symbology. Normally, U-M will provide sample control drawings in electronic format for A/E use, which will include sequences of operation. Revise these drawings to make them project specific. Revise sequences of operation to include strategies specific to the project (example: change-over to free cooling). Include all project specific setpoints and alarm values. Provide similar control drawings for systems not available from U-M's samples.

Wiring diagrams shall be provided on the control drawings that indicate the method of starting fans, pumps, and other equipment, safety interlocks, interface to manufacturer's provided controls, etc. These diagrams may be schematic in nature but shall indicate fundamentally how electrical control is accomplished.

"Point Lists" are not required and shall not be used.

DDC Panel Locations, Clearances, and Communication Wiring

The control drawings shall include system architecture diagrams specific to the project. These diagrams indicate the location and quantity of DDC and auxiliary panels. U-M will normally provide this information to the A/E, for inclusion on the project drawings.

The controls contractor will run all communication wiring between DDC panels and TECs. Communication wiring is to be indicated on the system architecture diagram, including wiring back to a telephone closet.

Each DDC panel will have one or more auxiliary panels. See "Typical DDC Panel Assembly". The A/E shall indicate the location of these panels on the plan views. For a typical assembly allow 7'of wall space; note that some panel assemblies require more space, consult with U-M.

Locate panels to provide a minimum of 36" clearance in front of each panel, and designate this clearance on the drawings.

Power for Controls

DDC Panel Assemblies: Each assembly (not each panel in an assembly) shall be provided with (2) 20 amp dedicated circuits (separate circuit breakers). Indicate these circuits on the electrical drawings, home-runned to the panel assembly location.

TEC Power (DDC VAV box controllers, etc.): Designate circuits in receptacle panels on each floor for TEC transformers. Provide one 20 amp circuit for every (50) Terminal Equipment Controllers.

Actuator Power: See Master Specification 230900, Article 2.6.

Power for meters and other control accessories that are provided by the controls contractor: This is provided through a fused disconnect located in the DDC auxiliary panel and is part of the controls contractor's scope of work per U-M Master Specification 230900. Therefore the A/E does not need to typically indicate power for such items on the design drawings. See U-M Master Specification 230900, article 2.5.

Life Safety Control

U-M's DDC system is not listed for life safety use and therefore shall not be used for initiating or alarming life safety applications. Two common examples are as follows:

> Stair Pressurization Control: The building fire alarm system will initiate operation of the stair pressurization fans. Any controls required for stair pressurization shall be stand-alone from (and independent of) the DDC system.
>
> Atrium Smoke Purge: The building fire alarm system will initiate atrium smoke purge. Any controls required for smoke purge shall be stand-alone from (and independent of) the DDC system.

However, the controls contractor will provide the stand alone components (dampers, end-switches, pressure transmitters, etc.) and therefore these components shall be indicated on the control drawings and include complete sequences of operation.

Fire Command Centers

The building code requires status indicators and controls for air distribution systems in Fire Command Centers (FCC). These devices shall be provided as a separate DDC control panel in the FCC. The DDC system (as opposed to the fire alarm control system) shall output status to the panel and provide air distribution system control from the panel. Refer to Design Guideline SBA 5.11 Fire Command Center for additional information.

Manufacturer Provided (Packaged) Controls

Chillers and boilers shall be equipped with manufacturer provided controls. Manufacturer provided controls shall typically be limited to control of the chiller (boiler) itself. Control of the chiller (boiler) plant (chiller (boiler) sequencing, etc.) shall be by U-M's DDC system.

Packaged controls should also be specified for equipment normally equipped that way, such as storm/sanitary pumps, RO/DI systems, vacuum pumps, air compressors, pollution control (air and water treatment) systems, refrigerant leak detection, fuel oil systems, DX systems, condensate pumps, etc. See the respective design guideline for these systems for any specific requirements for the packaged controls.

Packaged controls shall not be specified for air handlers, unless specific permission is given by the U-M Design Manager.

Control Air

For central campus projects, 90 PSIG compressed air is available from the campus steam tunnel system at minus (-) 50 ºF dewpoint. This air shall be utilized for control air use, dryers for control air are not required.

For other campus locations, a control air compressor will normally be required. U-M Master Specification 230900 specifies control air compressors and accessories (PRV stations, refrigerated air dryers, etc.).

In either case, A/E drawings shall indicate the source of control air.

Electric vs. Pneumatic Actuators

Damper actuators and large control valves shall be pneumatically actuated, except for special conditions as approved by the U-M Design Manager. Small dampers and valves controlled by TECs shall utilize electric actuators, as indicated in U-M Master Specification 230900.

Smoke and combination fire/smoke dampers shall be pneumatically actuated.

Typical Alarms to be Monitored by DDC

In addition to the typical status alarms associated with DDC control, the DDC shall be indicated as monitoring the following equipment. Equipment should be specified with a common alarm contact for DDC monitoring, not separate alarm contacts for each alarm condition, except as noted:

- Sanitary and Storm Pumps (common alarm: high level, seal failure, etc)
- Cold/Warm/Environmental Rooms
- Walk-in Freezers
- Heat Trace
- Emergency Generator (generator running, generator trouble)

- Automatic Transfer Switch Transferred to Generator Power (Connect in series each "on generator power" auxiliary contact in each ATS to a single point in a DDC panel to notify BAS if any ATS transfers to generator power.)
- Critical Unitary A/C units (for example, computer rooms)
- RO/DI Systems
- Pollution Control Systems
- Fuel Oil Systems
- Refrigerant Leak Detection Systems
- Chiller Relief Valve Status
- Domestic Water Booster Pump Systems
- Glycol Make-up Systems (separate low pressure and low level alarms)
- Substation Room Temperature

The above list is not exhaustive. The design team shall carefully consider and include alarm monitoring appropriate for the project. *The A/E shall indicate any special alarm setpoints on the control drawings* (e.g. critical humidity limits in a clean room or museum).

Miscellaneous

DDC controlled heating hot water heat exchangers shall include back-up pneumatic control.

DDC controlled cooling towers shall include a pneumatic controller to provide back-up control of the tower condenser water bypass valve arrangement .

Exterior lighting associated with new buildings shall be controlled by DDC. DDC shall turn the lights on and off, and status the lighting contactor (via a current sensing relay). The contract drawings shall indicate a contactor for exterior lighting control by DDC.

U-M utilizes a central weather station that transmits outside temperature and humidity conditions across the BAS network. Therefore local outside temperature and humidity transmitters should normally not be indicated.

Fan systems capable of developing static pressures in excess of the duct system's (air handler casing, plenums, ducts) static pressure rating (positive or negative) shall be equipped with static pressure safeties to turn off the fans prior to damage occurring from excessive pressure. The AE should not indiscriminately specify these devices but shall include them based on an evaluation of the maximum pressure the fan can develop, the pressure class of the duct system, damper pressure ratings, and the degree of risk.

In general, for air handlers, heating coils shall be designated as fail open, and cooling coils shall be designated as fail closed.

For reheat coils in zones serving animal rooms, reheat coil control valves shall be **normally closed** type. This avoids a wild coil condition from severely over-heating the animal room.

Include U-M's "Differential Pressure Transmitter Installation Detail (Liquid)" on any project utilizing liquid DP transmitters.

For all air and liquid flow measuring devices, the AE shall indicate their location on the plan views as well as on the control drawings. Design the duct or piping at the meter location to provide the manufacturer's required up and downstream straight and unobstructed lengths, and indicate these requirements on the drawings. When in doubt as to specific manufacturer's requirements, provide 10 straight diameters upstream and 5 straight diameters downstream.

For information regarding controls related to refrigerant leakage monitoring, see DG230930 Refrigerant Monitoring Systems and the standard detail 15635001 Refrigerant Monitor Control Diagram.

DESIGN GUIDELINE 230930
REFRIGERANT MONITORING SYSTEMS

Scope

Describes U-M requirements for leakage monitoring of refrigerant systems that must comply with ASHRAE Standard 15, including alarms and related controls

Related Sections

U-M Master Specification Sections:

MS230930 Refrigerant Detection and Alarm

U-M Standard Details:

D156535 001 0815 Refrigerant Monitor Control Diagram

General

Provide a refrigerant monitoring and ventilation system in accordance with the mechanical code and ASHRAE Standard 15 (most current edition).

Utilize U-M master specification 230930 as the basis for the specification for the refrigerant monitor. Extensive editor's notes are included in the specification to assist the A/E. Be sure to turn on hidden text and read those notes.

Utilize U-M Standard Detail 15635001 for the refrigerant monitor control requirements. Comply with the designer notes included with the detail.

Revise U-M's master specification and detail as required to be project specific.

The master specification and detail reflect U-M's basic requirements for refrigerant monitoring of low toxicity, low flammability refrigerants (ASHRAE Standard 34 safety group A1 and B1). They do not express requirements for higher toxicity/higher flammability refrigerants such as ammonia systems. In the rare circumstances such systems are being considered, notify the U-M Design Manager and meet with U-M OSEH and other U-M parties to determine specific requirements.

The supply and exhaust fans and related dampers of the refrigerant ventilation system shall be activated through hard wiring from the refrigeration monitor control panel, not through DDC controls.

Self-Contained Breathing Apparatus is normally not required since U-M has a 24/7 emergency response team with trained personnel properly fitted for SCBA.

DESIGN GUIDELINE 232216
STEAM SPECIALTIES

General

Consult with Project Coordinator whenever the quality of the steam is an issue to the A/E. See University Provided Utilities in the SID Section for steam pressures available.

Design Requirements

Where medium pressure steam (60 psig) is available, a pressure reducing station shall be provided to meet the total low pressure (5 psig) load during major breakdowns or planned maintenance.

Where intermediate steam pressure is required (e.g. 15 psig) a jet compressor should be provided to supplement the low pressure steam.

The pressure reducing valve or jet compressor should be insulated and covered with sound attenuation wrapping.

Equipment Requirements

Traps, Strainers and Meters

Float and thermostatic traps - F & T traps should have heavy cast iron bodies. The float valve mechanism should be of heavy brass and should have a variable level action to ensure quick and full opening.

The thermostatic bellows member for venting air should have not less than 10 corrugations and should be protected against damage from water hammer by a brass shield cup.

Inverted Bucket Traps - IB traps should have high-strength cast iron bodies. Bucket should be of brass and the level mechanism should be of heat treated stainless steel operating on knife edges. Removable seats and plungers should be heat treated stainless steel. Steam tight seal between seats and covers should be provided using an automotive type copper gasket.

A vertical tube should be threaded into the inlet opening and capped with a baffle to prevent condensate from impinging on the bucket.

Strainers - Strainers should be of the 'Y' type having heavy cast iron bodies with blow-off tappings in screen covers.

Sizes 1/2 inch through 1-1/2 inches should have a screen of 20 mesh Monel.

Sizes 2 inches and over should be .016 inch thick perforated stainless steel, with 324 holes 1 per square inch, each .033 inch diameter.

Steam and Condensate Meters - Where possible all steam shall be metered by gravity type condensate meters as manufactured by CADILLAC METER CO., or as approved by the University Utilities Engineer through the University Project Coordinator. Flashtanks shall be provided before the meters.

Medium pressure steam that will not be returned as condensate shall be metered directly with an orifice plate and a calibratable, differential pressure cell and transmitter with pressure compensation. "Shunt flow" or by-pass type steam meters are not acceptable.

Meters should be complete with a low voltage pulse totalizer output and a 4-20 mA output proportional to flow where appropriate for external interface with a building management system.

Steam Humidifiers

Humidification should be normally provided for each project. If required, primary humidification at the central AHU's will be provided after evaluating problems that may be caused by condensation on the perimeter glazing.

When a specific zone requires a higher humidity level than adjoining areas, the A/E should provide for the prevention of moisture migration from this high humidity zone. This will require that doors remain closed except for individual ingress/egress for Rh differentials approaching 20 percent and non-permeable floor/wall/ceiling treatment for greater differentials.

All steam humidifiers connected to the building steam supply, whether primary or secondary, should contain insulated dispersion tubes.

Installation Requirements

Size traps for twice the condensate rating unless the coil or vessel manufacturer recommends otherwise. Install multiple traps where one trap will not handle the condensate rating.

The run-out from unit being trapped should be the same size as the drain tapping.

The discharge line downstream of the pressure reducing valve or jet compressor shall be fitted with a pressure relief vented to atmosphere (outside the building) to prevent overpressurization of equipment and components.

Install strainers ahead of all controlled devices. Install a valved blow-down line for each strainer. Screens should be removable without disturbing the pipes.

Install inverted bucket traps on all steam equipment drains and all steam line condensate drains except for steam using equipment served by modulating steam control valves. For this equipment, install float and thermostatic traps.

Humidifiers to be located to assure absorption into the airstream rather than wetting of parts such as fans, turning vanes, etc. The preferred location is in the supply ductwork, with 10-12 feet of straight duct downstream. Internal lining should not be used downstream within 10 feet of humidifier.

DESIGN GUIDELINE 235000

HOT WATER HEATING SYSTEMS

Scope

Hot water heating systems, including low pressure steam-to-water shell and tube heat exchangers and hot water heating boilers.

Related Sections

U-M Design Guideline Sections:
DG 2.1 - Owner's Project Requirements (OPR) and Basis of Design (BOD)
DG 4.6 - Utilities for University Buildings
DG 230010-H Supplemental HVAC Design
DG X.X Water Chemical Treatment (FUTURE)

U-M Master Specification Sections:
235239 Fire Tube Boilers (Hot Water) (FUTURE)
235716 Steam-to-Water Heat Exchangers

U-M Standard Details:
15189001 - Closed System Shot Feeder Detail
1518903 - Closed System Make-Up Detail
15515011 - Coalescing Separator and Floor Mounted Expansion Tank Detail
MD 235716 001 - Critical Steam to Water Heat Exchanger P & ID
MD 235716 002 - Non-Critical Steam to Water Heat Exchanger P & ID
MD 235716 003 - Steam to Water Heat Exchanger Piping Detail
MD 23XXXX 001 – HWH Boiler P & ID (FUTURE)

Requirements Common to Steam Heat Exchanger and Boiler Systems

The central (heat exchanger (HX) or boiler) heating system type and configuration shall take into account the attributes of the building's distribution network, terminal units, and terminal unit controls. Examples include whether terminal units utilize 2 or 3 way valves and assuring that terminal unit water temperature requirements permit the hot water supply temperature to be reset low enough and frequently enough to produce a significant number of hours when boilers can operate in condensing mode.

Quantity and Sizing

Typically the central heating equipment (HX or boilers) should consist of a minimum of two identical capacity units, each sized for somewhere between 50% and 100% (see rationale below) of the *Peak Diversified Load* (PDL). PDL is defined as the maximum load expected

on a diversified heating plant on a design heating day. The engineer of record is responsible for determining PDL.

For existing systems, PDL shall be derived by consulting measured loads from the BAS system data historian. If unavailable, use computerized building energy simulation modeling.

For new systems PDL shall be established using a computerized building energy simulation model (Trane Trace, Carrier E20-II HAP, etc.) that complies with the requirements for simulation programs in ASHRAE 90.1 Appendix G.

To avoid oversizing central heating equipment the model shall account for diversity factors at each terminal load (e.g. terminal reheat, which typically has a high diversity) and shall credit heat recovery systems. When determining the heat recovery system credit, if there is a significant chance of heat recovery failure, assume the largest heat recovery system is not operational.

- Example: The building has two air handlers with heat recovery wheels. One unit can recover 2000 MBTU on a design day, the other can recover 1000 MBTU on a design day. The PDL should be reduced by 1000 MBTU.

- Example: A glycol run-around heat recovery system with redundant pumps and serving multiple coils: Such a system may be deemed to have very low probability of any failure, allowing full credit to be assumed for heat recovery.

Finally, in consultation with the U-M Design Manager, determine the need for future capacity and add it to the PDL. Normally assume no additional capacity. In cases where there is a significant potential for incremental increases in loads due to future renovations, a modest allowance of +/-10% future growth may be included. In some cases allowing space for future *additional* or *larger replacement* central heating unit(s) may be appropriate. Indicate in the Basis of Design document the PDL and any accommodation provided for future capacity needs.

After PDL is determined, consider the implications of losing one unit. If the loss of up to 50% of the PDL in an emergency is manageable through load shedding or shifting to other heating sources, units may be sized for as little as 50% of PDL, though careful analysis may imply sizing at 60-70% of PDL to be more appropriate. Examples of these ***non-critical HWH applications***:

- Buildings where ventilation air can be temporarily reduced.

- Buildings were outside air can be reduced in an emergency by temporarily limiting use of *non-critical* exhaust systems.

- Buildings or portions of buildings where space temperature can be compromised below normal set-points in an emergency.

When sizing heat sources and considering the above load reduction strategies, it shall not be assumed that ventilation air can be reduced by more than 50% or that space temperature can fall below 65°F.

Non-critical HWH applications typically would include offices, classrooms, outpatient facilities, buildings with return air systems, child care facilities, and housing.

A system is considered to be a ***critical HWH application*** if loss of any heating capacity below the PDL is intolerable for the application due to stringent criteria and operational constraints. In this case capacity should be 100% of PDL for each of two units (or three units at 50% capacity, etc.).

Critical HWH applications typically would include in-patient care facilities, animal vivariums, ambulatory outpatient surgical facilities, and 100% outdoor air wet lab buildings.

In rare cases, a small off-peak unit may be required, but only if the turndown of the primary system is incapable of meeting required summer loads without excessive temperature swings. Determine minimum load and verify that the heating units are capable of stable control at this load. Consider all components such as boiler size, pump size, steam control valve size, low flow time delay to control sensors, etc.

Calculations, criteria and assumptions regarding rationale for HX (or boiler) sizing must be clearly defined in the Owner Project Requirements and Basis of Design. Clarify added design capacity for future PDL, if any, as well.

Also refer to U-M Design Guideline 230010-H Supplemental HVAC Design for in-patient and ambulatory facilities.

Emergency Power

Normally pumps and heat sources (boilers) for both critical and non-critical applications should be on emergency standby power. If this requirement pushes the standby power source into the next size increment, consider if it makes sense for one or more heating components to remain on normal power, in particular for non-critical applications. Include all components necessary for the heating unit such as control panels, steam condensate pump units, etc. For critical applications, include domestic water booster pumps if needed for make-up water; for non-critical applications, include booster pumps if it does not impact generator size.

Pump Selection

Pump quantity and flow capacity should generally be selected in a manner similar to heat generating units (considering implications of lost flow). E.G. if two HX at 60% capacity each are provided, two pumps at 60% capacity would be provided. If three HX at 50% capacity each are provided, three pumps at 50% capacity each would be provided.

Piping Considerations

The piping arrangement of the pumps relative to the heat sources should normally be as expressed on the following U-M standard details:

MD 235716 001 - Critical Steam to Water Heat Exchanger P & ID
MD 235716 002 - Non-Critical Steam to Water Heat Exchanger P & ID
MD 235716 003 - Steam to Water Heat Exchanger Piping Detail
MD 235716 XXX – Boiler P & ID (future)

In particular for boiler plants, pipe for reverse return, equal pressure drop flow paths across each heat generating unit.

Maintainability

Design the placement of piping, ductwork and equipment so that full access is provided for maintenance, including primary heat exchanger replacement, without the removal of permanent piping or ductwork. Ensure equipment top access recommendations are met.

Provide adequate maintenance aisles and room door widths or removable panels to allow replacement of the largest heat generating unit or component. For units located in penthouses or other high locations, provide means for future replacement with a crane if other routes are not available. Dash-out/indicate equipment clearances and access pathways on the drawings.

Air Removal and Miscellaneous Accessories

A coalescing combination air/dirt separator shall be installed at the location in the system with the warmest temperature and lowest pressure. When practical considerations preclude both, select the location with the warmest temperature. Refer to U-M Standard Detail 15515011– Coalescing Separator and Floor Mounted Expansion Tank for requirements.

HWH systems shall include a shot feeder and corrosion coupon rack, as well as automatic city water make-up . Refer to U-M Standard Detail 15189001 Closed System Shot Feeder and 1518903 Closed System Make-Up for requirements. For hospital projects a shot feeder may not be required, consult with the U-M Design Manager.

Heat Transfer Fluid and Water Treatment

Water (chemically treated for corrosion resistance) is always the preferred heat transfer medium in HWH systems. Glycol should only be considered when freeze protection cannot be practically provided in any other way. For example, U-M normally prefers pumped heating coils on 100% outside air units, not glycol.

Use the U-M master specification and standard details for water treatment. Refer to U-M Design Guideline X.X Water Chemical Treatment (FUTURE) for further information. Coordinate water treatment with the heat generating unit manufacturer and revise the specification and details, if required, after consultation with the U-M Design Manager.

Design Criteria - Operating Temperatures and Pressures

New HWH systems shall be designed with a maximum HWHS temperature of 140°F, to allow efficient addition of other sustainable equipment such as condensing boilers, ground

source or heat recovery heat pumps or solar thermal heat in the future. HWHS/R delta T should be a minimum of 20°F, but preferably as high as 40°F to minimize pumping energy.

For HWH systems serving existing facilities, the goal is to achieve the criteria stated for new systems, above, if possible. Since most older systems were installed with a HWHS of 180°F, or even as high as 200°F, conversion to lower temperature HWH requires careful analysis and may require modifications or additions to terminal equipment and/or building envelop to allow the system to be operated successfully at lower temperatures and/or flows.

HWH systems shall be designed for fill and operating pressures that allow filling without additional booster pumps, provide effective venting and that minimize the use of equipment or piping rated for more than 150 psig. The documents shall include a piping schematic of the hot water heating system. Include expansion tank cold fill pressure (make-up water) and operating pressure on the drawings. Taking into consideration the heating pump pressure boost above the expansion tank operating pressure, verify relief valves and other equipment are selected to meet the operating pressure. Include relief valve pressures settings on the drawings.

Control Strategies and Considerations

Use the following U-M standard details for as the starting basis for general control strategies and configuration:

MD 235716 001 - Critical Steam to Water Heat Exchanger P & ID
MD 235716 002 - Non-Critical Steam to Water Heat Exchanger P & ID
MD 235716 XXX – Boiler P & ID (future)

As the U-M standard details referenced above indicate, for heat exchangers automated isolation valves are typically not required on inactive heat generating units. In most cases, the system can function with water flowing through the inactive units.

The controls strategies outlined below shall be described in detail in the control drawing sequence of operation.

Always include a supply water temperature reset schedule (based on outside air temperature) in the sequence of operation. While an aggressive reset schedule may result in excessive pumping energy, an appropriately selected reset schedule can reduce standby losses from piping and equipment, reduce cooling load during summer conditions, and improve controllability. A proper reset schedule must be provided for condensing boilers to assure condensing mode occurs over the maximum number of operating hours. See the boiler design section below for more information.

For critical systems, consider the need for monitoring system pressure (at the point of expansion tank connection) through BAS/DDC.

For variable flow systems, the HWHS/R differential pressure set point shall be reset based upon worst case valve position, i.e. reset downward until one valve is nearly open.

Based on discussions with manufacturers listed in the referenced U-M master specifications, shell and tube heat exchangers and high efficiency high mass condensing boilers can be modulated down to very low/laminar flow. Pumps however shall be operated at no lower than the pump/motor manufacturer's minimum flow rate. Obtain this flow rate from the pump mfr. and include in the sequence of operation. To assure the minimum flow rate is always attainable, provide a minimum flow by-pass either near the pump or in the longest piping run of the system, as appropriate for the building. Unless it is critical that the system provide rapid building warm-up, the preferred bypass location is near the pump.

Additional Heat Exchanger Design and Installation Requirements

Actual Steam Pressure at the HX

The steam pressure available for use in heat exchangers varies depending on the steam plant serving the facility and the location of the heat exchanger on the steam distribution network. See U-M DG 4.6 Utilities for University Buildings for the minimum steam pressure guaranteed at the building entrance. For buildings supplied with CPP steam, the minimum pressure guaranteed is 6 psig. For CPP supplied steam, the pressure at most building entrances is higher, but typically not higher than 12 psig. Assess the location of the building entrance relative to the steam plant and select steam control valves to provide stable control over the entire minimum and maximum steam pressure range that will actually occur at the control valve inlet. Account for expected distribution losses from the building entrance to the control valve inlet. Normally at least two steam control valves are required for stable turndown capacity control and three or more may be required for high turndown systems. Provided the C_v for each control valve on the control drawings.

Built-Up Versus Packaged HX Systems

U-M generally does not prefer factory assembled heat exchanger packages. Where used, the specification must require that all components comply with related specification sections (which in turn must comply with U-M Design Guidelines), e.g. valves supplied as part of the HX package. Packages must be specified to meet code clearances and require that all components are serviceable without excessive disassembly or total system shut-down.

HX Installation Requirements

Ensure condensate from heat exchangers includes an adequate drip leg to minimize back-up of condensate into the HX. Although at least 15" drip leg is required, the drip leg should be as high as possible for the installation location. Use swing check valves, not spring loaded check valves, at steam traps due to high pressure drop and tendency to cause water hammer in steam condensate piping.

Additional Boiler Design and Installation Requirements

Forced draft, direct vent, high mass fire-tube condensing boilers with minimum 316 grade stainless steel heat exchangers shall normally be specified. Utilize U-M Master Specification 235239 Fire Tube Boilers (Hot Water) (FUTURE) as the basis for the specification for HWH Boilers as it reflects the desired boiler package features, performance requirements and remote monitoring interface capabilities. Extensive editor's notes are included in the specification to assist the A/E. Be sure to turn on hidden text and read those notes.

Provide zero side clearance boilers whenever possible.

Optimizing Condensing Boiler Efficiency

Design the boiler plant for maximum turndown, incorporating Outdoor Air Temperature (OAT) Reset and reduced distribution flow to drive HWHR temperatures down, and increase supply/return delta T, as often and as low as possible, to maximize the number of hours and extent that boiler condensing operation is achieved, while minimizing boiler on/off cycling.

Select heating terminal units/heat emitters that allow relatively low HWHS/R temperatures and high water-side delta T, evaluating any increased cost for emitters against improved boiler efficiency/lower boiler operating cost.

Analyze and provide a project specific OAT reset schedule. The highest HWH supply temperature set point of the reset schedule shall reflect the water temperature required to heat the building a -10ºF OAT. The lowest set point of the reset schedule shall reflect the water temperature required at the warmest OAT requiring heating. The lowest set point shall also be limited by non-envelope influenced heat emitters such as reheat coils on VAV boxes serving internal spaces. In some cases increasing the coil size of such emitters may be justified to provide lower boiler operating cost.

Boiler Piping Considerations

In general, design systems with variable volume primary heating hot water distribution, based on two-way valve controls on heating coils and other terminal units. Avoid dedicated boiler circulation pumps or creating a primary boiler loop, as the preferred fire-tube boiler manufacturers require little or no minimum flow, and have very low (50ºF) minimum heating hot water return (boiler inlet) water temperature requirements. Do not provide designs utilizing low mass water tube boilers with flow switches and the need for boiler pumps; which increase construction and operating costs, unless special circumstances require them.

Boiler Controls

U-M Master Specification 235239 Fire Tube Boilers (Hot Water) contains the University's control requirements for boilers and boiler staging. The specification includes all instruments, shipped-loose devices (including the common HWH supply water temperature

transmitter and the outdoor air temperature transmitter), and boiler/boiler plant controller programming required to operate the plant as described below.

Controls shall be provided by the boiler manufacturer to stage the boilers in the combination that continuously produces the best plant efficiency while meeting building load. Generally, operating more boilers at reduced flow and lower part load per unit provides best efficiency. Assure the plant arrangement permits the best plant efficiency to be realized.

Boiler control and boiler staging shall operate independently and stand-alone from the Owner's BAS/DDC system. Therefore the boiler specification includes the common HWH supply water temperature and outdoor air temperature transmitters. The A/E must indicate the mounting location of these devices on the design documents. Control by the Owner's BAS/DDC system shall be limited to control and monitoring of the distribution system (pumps, etc.) and monitoring a common boiler plant alarm generated by the boiler controller. See U-M Standard Detail MD 23XXXX – HWH Boiler P & ID (FUTURE) for additional information.

End DG.

OUT TO BID

DESIGN GUIDELINES

1.0 CODES AND REGULATORY AGENCIES

2.0 PROJECT PROCEDURES

3.0 SUSTAINABILITY

4.0 SPECIAL INSTRUCTIONS TO DESIGNERS

5.0 SPECIAL BUILDING AREAS

6.0 TECHNICAL REQUIREMENTS

6.1 ARCHITECTURAL

6.2 MECHANICAL

6.3 ELECTRICAL

6.4 SITE/CIVIL

7.0 MASTER SPECIFICATIONS

8.0 PREFERRED MANUFACTURERS LIST

9.0 STANDARD DETAILS AND SCHEDULES

10.0 CHANGES TO DESIGN GUIDELINES

6.3 ELECTRICAL

26 ELECTRICAL	Last Update	Previous Version	Replaces
260500 Common Work Results for Electrical	February 2016	October 2013	16010 Basic Electrical Requirements
260513 Medium, Low and Control Voltage Cables	February 2005	September 2000	16120 Wires and Cables
260526 Grounding and Bonding for Electrical	March 2005		16450 Grounding
260533 Electrical Materials and Methods	June 2003	October 2002	16050 Basic Electrical Materials and Methods
260543 Underground Services for Electrical Systems	October 2002	September 2000	16110 Underground Electrical Service
260800 Electrical Acceptance Tests	October 2009	May 2009	16950 Electrical Acceptance Tests
260933 Lighting Dimming Controls	March 2004		16550 Lighting Controls Systems
261000 Medium Voltage Electrical Distribution	December 2015	June 2003	16305 High Voltage Distribution
261010 Electrical Power Systems	June 2003	September 2000	16300 Electrical Power Systems
261100 Unit Substations	January 2016	March 2014	16310 Unit Substations
262000 Low Voltage Electrical Distribution	July 2003		16400 Service and Distribution
262726 Wiring Devices	March 2004		16140 Wiring Devices
262900 Motor Controls	March 2005		16480 Motor Controls
262923 Variable Frequency Drives	June 2003	July 1994	16156 Variable Speed Drives
262940 Heating Cables and Mats	July 2003		16850 Heating Cables and Mats
263000 Engine-Generator	March	March	16231 Engine-Generator

System	2016	2014	System
264100 Lightning Protection	July 2013	April 2006	16670 Lightning Protection System
265100 Interior Lighting	September 2017	March 2016	16511 Interior Lighting
265600 Exterior Lighting	February 2015	May 2008	16521 Outdoor Lighting

27 COMMUNICATIONS	Last Update	Previous Version	Replaces
272000 Voice and Data Communications	April 2011	December 2004	16740 Telecommunications System
273523 Emergency Responder Radio Coverage	November 2014	January 1998	16760 Special Communications Systems
275313 Clock Systems	May 2012	September 2000	16730 Clock System

28 ELECTRONIC SAFETY AND SECURITY	Last Update	Previous Version	Replaces
281600 Security Systems	July 1990		16725 Security System
283100 Fire Detection and Alarm	October 2017	February 2016	16720 Fire Alarm System

© 2018 Regents of the University of Michigan
Design by Michigan Creative
326 East Hoover, Ann Arbor, MI 48109-1002
Phone: (734) 763-3020
Contact Us

DESIGN GUIDELINE 260500
COMMON WORK RESULTS FOR ELECTRICAL

Scope

Prepare the project's electrical design and associated contract documents in accordance with these Design Guidelines, in accordance with the scope of work defined in the Program Documents, and within the construction budget.

Related Sections

U-M Design Guideline Sections:
DG 2.0 - Project Procedures
DG 4.0 - Special Instructions to Designers
DG 5.0 - Special Building Areas
DG 6.3 - Electrical Technical Sections
DG 8.4 - Electrical Trades Preferred Manufacturers List

U-M Master Specification Sections:
Division 01 - General Requirements
Division 26 - Electrical Master Specifications
Division 27 - Communications
Division 28 - Electronic Safety and Security

U-M Standard Details:
260000 Series - Electrical Standard Details

Reference Documents:
NFPA 70 - National Electrical Code (NEC)
NFPA 70E – Standard for Electrical Safety in the Workplace
IEEE Standard 141 - Recommended Practice for Electric Pwr. Dist. for Industrial Plants
IEEE Standard 1584 - IEEE Guide for Performing Arc-Flash Hazard Calculations

Design Requirements

Submit the documents specified in the Design Deliverables list for approval. Submit them at the end of the Schematic Design, Design Development and Construction Documents phases.

Provide flexibility for future changes in the use of the space, and provide spare capacity for future load growth. Provide 20 percent spare capacity for load growth unless 20 percent spare capacity would require a significant power distribution system upgrade. In those special cases, provide as much spare capacity as the existing system can supply.

Field verify the existing installation and/or site. Do not rely solely on the existing drawings and/or site surveys. As a minimum, field verify the quantities, sizes, ages, conditions and spare capacities of the following:

- Power ducts, manholes, services to the building and unit substations.
- Panels, circuit breakers, disconnect switches, motor controls, raceways and wiring.
- Interior and exterior lighting, switches and receptacles.
- Grounding.
- Telecommunications ducts, manholes, rooms and services to the building.
- Fire alarm, security, card access control, audio/visual and other special systems.

Coordinate with the Design Manager to obtain recent historical information from the following U-M departments:

- Key plans and electrical risers from AEC. UMHS projects to contact Facility Planning and Development (FPD) for risers and panel location drawings.
- Electrical usage, primary system and unit substation information from the Plant Utilities and Plant Engineering (UPE) Department.
- Existing condition information from the Facility Condition Assessment Program, the Facility's Manager and the Plant Region maintenance personnel.
- Card access control system information from the Plant Key Office.

Show all known below grade, below floor and in-floor utilities that will be impacted by the project's work.

Use existing spare circuit breakers or existing spaces whenever possible. If necessary, combine existing lightly loaded circuits to free existing circuit breakers for the new loads. Combining circuits requires matching phase conductor colors and relabeling references to circuit used in field, including junction boxes and end of circuit labeling. Tap buses only with the approval of the Plant UPE Department. Coordinate with the Design Manager before adding a new unit substation.

Number electrical panels and devices in accordance with U-M Standard Detail 260500001. Match the existing installation whenever possible and practical.

Locate equipment requiring routine maintenance so it is easily accessible.

- Installations shall not require the use of a lift or scaffolding, or the removal of other infrastructure, for routine maintenance.
- For rooftop equipment with control panels, motor starters, disconnects or motors mounted over 6 feet above roof level and requiring routine maintenance, arrange for the Architect to provide a permanent galvanized steel work platform and ladder.

Provide access panels (24 inches square minimum to access equipment out of arm's reach) for maintaining electrical equipment located behind walls or above permanent ceilings.

Ensure that no piping or ductwork is routed in the NEC-required dedicated spaces above or working spaces around electrical equipment. Provide drip pans for existing piping routed over electrical equipment.

Correct code violations and safety hazards to the greatest extent possible within the project boundary. If existing code violations or safety hazards are discovered that are not addressed in the Program Documents, notify the Project Manager.

Short Circuit, Protective Device Coordination and Arc Flash Hazard (SPA) Studies

Short Circuit and Protective Coordination Device studies shall be prepared in accordance with IEEE Standard 141. Arc Flash Hazard studies shall be prepared in accordance with IEEE Standard 1584 and NFPA 70E.

SPA studies shall be signed and sealed by a Registered Professional Engineer, in the State of Michigan. Architect/Engineer shall be directly responsible for SPA's. If the SPA study is sub-contracted out, the Architect/Engineer shall review and approve the study. The Electrical Contractor shall not perform or arrange for these studies.

Perform SPA studies for projects that include new installations, total replacements or partial replacements of power distribution systems. Studies are required to establish proper electrical equipment ratings and settings of electrical distribution equipment and powered mechanical equipment including, but not limited to, unit substations, switchboards, panelboards, motor control centers, transformers, transfer switches, UPS's, generators, motor starters, disconnect switches, variable frequency drives and control panels. SPA studies shall also be performed for projects that include modifications to existing electrical utility service, major feeder conductors and motor quantities.

SPA studies shall begin at the point of utility service for the facility down through the 480V and 208V distribution systems. Include in the studies the project scope plus existing upstream electrical infrastructure and any other directly affected existing electrical distribution equipment. U-M standard practice is to de-energize electrical equipment prior to any work being performed. This standard practice should not be used as a basis for determining the scope for Arc-Flash Hazard analysis.

Complete a 'design basis' SPA study during the design phase of the project. For review the study shall be submitted to the Design Manager, Commissioning Authority and UPE Primary System Engineer.

Complete a 'final' SPA study during the construction phase of the project prior to energizing electrical equipment. Base calculations on actual field installation data. The final study shall incorporate shop drawing information, protective device coordination time-current curves from the electrical equipment manufacturers, and actual cable sizes and lengths from the Electrical Contractor. The final SPA study may be submitted in two parts to accommodate the construction schedule. The first part shall contain the short circuit and protective device coordination (completed shortly after shop drawing approvals) and the second part shall contain the arc flash hazard analysis (completed prior to equipment energization). For review the study shall be submitted to the Design Manager, Commissioning Authority and UPE Primary System Engineer.

Information on the primary distribution system and on the primary system fault capability is available from UPE Primary System Engineer.

Derive settings for new protective devices in consideration of existing upstream protective device settings, and optimize system coordination in light of this constraint. The utility upstream protective device feeding the facility shall be maintained as the upper limit for coordination. Where the upstream device characteristics do not allow reasonable coordination with new equipment, identify the problem and the recommended resolution in a letter to the Design Manager prior to submitting the coordination study

Design power distribution systems to limit the arc flash incident energy to a magnitude requiring Personal Protective Equipment (PPE) of Category 4 or less at unit substations and switchboards, and Category 2 or less at panelboards and similar equipment rated 600 amps or less.

All circuit breakers shall be fully rated for the available short circuit current, series ratings shall not be applied.

Do not to rely upon AIC ratings of existing equipment. Do short circuit studies to affirm the proper AIC for each location.

When the power distribution system includes an interactive power source such as an engine-generator with closed transition automatic transfer switches, solar photovoltaic system, wind generator or fuel cells, only perform the short circuit study based on the combined fault contributions from the incoming utility power system and interactive source if the two power sources are paralleled for more than 100ms.

Verify electrical equipment supplied by others such as equipment control panels and variable speed drives are adequately rated for the available short circuit current.

Contractor shall furnish all field data as required by the SPA studies. Furnish the Contractor with a listing of required data.

SPA Study and Report Requirements
SPA studies shall be performed using computer software from SKM Power Tools.

SPA studies shall include an executive summary. Incorporate description, purpose, basis and scope of the study. Also include pertinent data and the rationale employed in developing the study calculations.

'Design Basis' SPA studies are not required to include all system components. The studies shall include sufficient detail to verify the following:

- Maximum available fault current at each level of the distribution system.
- Protective device coordination for the most restrictive scenarios.
- Arc-flash hazard levels at unit substations.

All other formatting and information requirements shall apply.

Short Circuit reports shall include, but not limited to, the following:

- Input data, case descriptions and definition of terms.
- One-line diagram showing calculated short circuit currents at each node, bus identification numbers, voltages, protective devices with associated ampere ratings, cable sizes and lengths, transformer kVA sizes with voltage ratings and impedances, motor horse powers, generator kVA ratings with subtransient reactance, ATS's, switchboards and panelboards.
- Include fault contribution of motors, with motors < 50hp grouped together.
- Results of short-circuit calculations shall be presented in tabular form and include:
  - Bus identifications
  - Device identifications
  - Device ratings
  - Operating voltages
  - 3-phase short circuit currents (asymmetrical and symmetrical).
  - Phase-to-ground short circuit currents.

Protective Device Coordination reports shall include, but not limited to, the following:

- Tabulations of protective relay settings, adjustable circuit breaker trip unit settings, fixed circuit breaker ratings and fuse types/ratings.
- Automatic transfer switch voltage, current, time and control settings.
- Coordination curves prepared in log-log format to illustrate adequate clearing times between protective devices.
- Specific time-current characteristics of each protective device plotted in such a manner that all upstream devices will be clearly depicted on one sheet.
- Multi-color curve sheets for improved clarity.
- Curve sheets shall include the following:
  - Device identifications and associated settings/sizes/ratings
  - Voltage at which curves are plotted
  - Current multiplier
  - Curves labeled with applicable curve number
  - Relay CT ratios, tap, time dial, and instantaneous pickup
  - Circuit breaker sensor rating, long-time, short time, instantaneous and ground fault settings, time bands and delays
  - Melting and clearing fuse curves
  - Maximum short-circuit cutoff point
  - Cable ANSI insulation damage curves
  - Transformer ANSI damage curve and inrush point
  - Motor starting profiles (200hp and above)
  - Single-line for the portion of the system

Arc-Flash Hazard analysis reports shall include, but not limited to, the following:

- Arc-Flash Incident Energy (AFIE) levels and flash protection boundary distances at all locations in the electrical distribution system where work could be performed on energized parts.
- Analysis performed under worst-case Arc-Flash conditions.

- Results of arc-flash hazard analysis shall be presented in tabular form and include:
  - Bus identifications
  - 3-phase short circuit currents
  - Arcing fault current levels
  - Flash protection boundary distances
  - AFIE levels
  - Personal protective equipment (PPE) hazard risk category

SPA Study and Report Deliverables
Analyze the short circuit calculations, and highlight any equipment (new or existing) that is determined to be underrated as specified or that does not coordinate with upstream equipment. Propose approaches to effectively protect the underrated equipment.

Submit the report to the Electrical Contractor for their use in providing fuses and adjusting electrical equipment settings prior to equipment testing and energization. The independent electrical testing agency and Commissioning Authority will verify proper fuse sizes and protective device settings.

Submit the final SPA report (pdf format), including the associated SKM Power Tools data files, on a CD or DVD to UPE Primary System Engineer and to the contractor for inclusion in the O&M Manuals.

Arc Flash Hazard Warning Labels
The Electrical Contractor shall provide generic arc flash hazard warning labels on equipment. This equipment includes but is not limited to automatic transfer switches, switchboards, panelboards, meter socket enclosures, transformers, storage batteries, battery chargers, inverters, control panels, variable speed drives, motor controllers, circuit breakers and disconnect switches.

Although portions may be energized early to provide temporary power for construction, the power distribution system will not be declared Substantially Complete and will not be accepted by the University until the study and labeling tasks have been completed.

Design Drawings

Prepare the following electrical drawings and specifications in accordance with the Design Deliverables list and as applicable to the project, for use during construction:
- Demolition plans and details.
- Underground duct bank and manhole plans, elevations, profiles and details.
- Primary and secondary feeder conduit routing drawings.
- Normal and emergency power plans, one-lines, risers and details.
- Schematic and wiring diagrams.
- Lighting plans and details.
- Telecommunications, fire alarm, clock, card access control, security, CCTV, nurse call, audio/visual, sound reinforcement and other special systems plans, risers, schematics, and wiring diagrams.

- Grounding and lightning protection plans, risers and details.
- Substation, switchboard, panelboard, MCC and other applicable equipment schedules with connected load summaries.
- Systems and equipment sequences of operation.
- Indicate NEC required working clearances on plan views for electrical equipment and dedicated electrical space on equipment elevations. Space allotted for future equipment should be noted on plan view drawings including any associated working clearances.

For new electrical drawings, use the symbols and abbreviations established by the applicable nationally recognized trade association. When revising existing drawings, use the existing symbols and name equipment using the existing convention. Provide a complete symbols legend.

When revising existing drawings, identify revisions. Circle and label revisions, or draw the revisions using a heavier line weight than used for the existing and background.

When a building feature, cable tray, conduit, or circuit continues on to another drawing, reference the continuation drawing at the point of continuation. Show reference column and row numbers for clarity.

Indicate room names/numbers and include furniture layouts on all plan view drawings. Identify all offices intended to be occupied by more than one person.

Coordinate designs with reflected ceiling plans noting locations of soffits, beam pockets, skylights, etc.

On new building, building addition and total renovation projects, evaluate the use of aluminum cables in lieu of copper for feeder circuits No. 1 AWG and larger only. On partial renovation projects, match the existing cable type. Note that chiller manufacturers will not allow the use of aluminum cables to feed chiller VSDs or starters.

- Provide two cable and conduit sizing charts on the drawings, one for copper cables and one for aluminum cables.
- Include the aluminum cable technical and installation requirements contained in Master Specification 260513. Include Standard Detail 16120013 on the drawings.
- After completion of construction, verify the as-built drawings identify where aluminum conductor cables were installed.

Show the wire and conduit sizes for every feeder circuit on the riser and one-line diagrams.

Show wire and conduit sizes on the plan drawings for any circuit other than 20 amperes, single phase. Show multi-wire feeder and branch circuits requiring separate or oversized neutrals. A general note is adequate to define wire and conduit sizes for 20-ampere single phase circuits and to specify shared neutrals.

Show bus amperes, number of phases and wires, breaker/starter/fused switch/fuse sizes, and AIC ratings for all unit substations, switchboards, panels, MCC's, etc.

Specify the mounting heights of electrical devices. Indicate if the devices are flush or surface mounted. Indicate if raceways are exposed or concealed. Show 4" high minimum concrete housekeeping pads for floor-mounted equipment.

Show Contractor furnished electrical equipment and control wiring on the plan drawings. Include equipment required by the NEC such as motor disconnect switches if not provided by others, and include control wiring required for equipment operation if not provided by others. Do not rely solely on specification statements or general drawing notes to identify Contractor scope. Provide sufficient information so that quantities can be determined easily.

Specifications

Number specification sections in accordance with the CSI specification numbering system.

Use the U-M Master Specification sections applicable to the project. Turn on hidden text, follow the hidden text editor's notes and edit the sections to make them project specific.

Eliminate from general specifications the requirements that do not apply to the project.

Shop Drawing Review

Review Contractor submitted shop drawings and product literature. Approve submittals that comply with the contract documents, and mark up or reject submittals that do not comply. Approved submittals shall include adequate information to prove that the proposed products comply fully with the contract documents. Each submittal shall be marked to indicate the specific models, sizes, types and options being provided. Submittals not so marked shall be rejected.

Testing

Specify testing in accordance with Design Guideline 260800, Electrical Acceptance Tests. Request approval before specifying testing beyond what is listed in Design Guideline 260800.

Commissioning

Edit and insert Commissioning Master Specification 019100 or 019110 into the project specifications (unless an edited version will be provided by the U-M Commissioning Authority during CD design). Refer to this specification section rather than specifying commissioning requirements in the other specification sections.

Operation and Maintenance Manuals

Edit and insert Master Specification 017823 into the project specifications. Refer to this specification section rather than specifying O&M manual requirements in the other specification sections.

Review and approve Contractor submitted operation and maintenance manuals. These manuals shall be marked to indicate the specific models, sizes, types and options of the systems and equipment that was be provided. Manuals not so marked shall be rejected.

Training

Refer to Specification 019100 or 019110 when specifying Owner training requirements. Training shall not take place until the Owner's Personnel have been given 2 weeks to review the approved Operation and Maintenance Manuals. The Contractor shall notify the Project Manager 3 working days in advance of training sessions.

Record Drawings

Review and approve Contractor submitted as-built information and provide the information to the University in accordance with Design Guideline 2.4. The drawings shall show the locations of equipment, light fixtures, switches, receptacles and junction boxes, riser information, the sizes of conduits and conductors, circuit numbers, and deviations from the design. Buried, embedded and concealed primary and feeder conduits shall be dimensioned from permanent building features.

Products

Specify products that conform to the applicable standards of the American National Standards Institute (ANSI), the Institute of Electrical and Electronic Engineers (IEEE), the National Electrical Manufacturers Association (NEMA) and the National Fire Protection Association (NFPA).

Specify that products be listed or labeled by a Nationally Recognized Testing Laboratory. When components are combined to form a major assembly, the entire assembly shall be listed or labeled.

Specify multiple manufacturers from the Electrical Trades Preferred Manufacturers List when multiple manufacturers produce products meeting the project requirements.

Do not use the term "Or Equal" or any similar language to specify products or services.

Specify products that are known to have been used with success elsewhere. Do not specify newly developed or unproven products.

When designing new electrical systems, specify major power distribution equipment shall be from one manufacturer. When designing renovations, match the existing equipment where practical.

Specify that equipment and materials shall be provided from the manufacturers specified. Substitutions for specified products shall be acceptable only if proposed and approved in writing before the project is awarded.

During Contractor shop drawing submittal review, approve only those submittals which comply with the project specifications.

Execution

Ensure the following additional Contractor actions are specified in the contract documents.

Temporary Services

Temporary lighting and power shall be provided as specified in the project's Supplemental General Conditions. Project design shall include investigation of proposed power sources, available capacities, and impact on end users. For UMHS projects, contractors shall coordinate temporary power sources with FPD.

Permanent electrical systems or equipment used during construction shall be replaced or cleaned and fully refurbished prior to acceptance by the University.

Lamp and Ballast Recycling

The Contractor shall recycle lamps and ballasts. Insert verbatim into the project specifications the recycling requirements contained in Master Specification 260500.

Quality Assurance

Specify the Contractor shall contact the Owner’s Code Inspection Department at (734) 764-2457 before the start of the project to arrange for periodic inspections. Do not specify code inspections by the city of Ann Arbor or any other jurisdiction prior to coordination with Owner’s Code Inspection Department.

Specify that electrical systems, equipment and materials shall be tested by an independent testing agency prior to final acceptance of the work. Acceptance tests shall be performed in accordance with applicable codes, standards and manufacturers' instructions. The contractor shall provide written test reports, signed and dated, for all tests prior to acceptance of the electrical equipment by the Owner.

Warranty

Specify that electrical work shall be guaranteed for a period of one year from the date of acceptance of the project by the University. A manufacturer's warranty beginning upon equipment receipt or startup shall be extended to one year from final project acceptance. A manufacturer's warranty in excess of one year shall remain in effect for its entire time period.

MEDIUM, LOW AND CONTROL VOLTAGE CABLES

Related Sections

U-M Design Guideline Sections:
260800 - Electrical Acceptance Tests

Products

Medium Voltage Primary Cables

Primary power distribution cable shall be single conductor stranded copper, with ethylene propylene rubber (EPR) insulation rated 15kV, 90 degrees C, 133 percent insulation level, having a 5 mil thick minimum tape shield with 12-1/2 percent minimum overlap, and polyvinyl chloride (PVC) jacket. Cable shall be suitable for use on a 13.2 kV, 3 phase, 3 wire, ungrounded system. Cable shall be suitable for use in cable trays.

Medium voltage service cables of voltages other than 13.2-kV (2.4kV, 4.8-kV) shall be of the type noted immediately above. The cable and terminations will be provided, and installed, to allow possible, future, conversion of the service to 13.2-kV.

Medium voltage cables serving loads directly at voltages below 13.2-kV (2.4-kV, 4.16-kV. 4.8-kV) shall be single conductor stranded copper, with ethylene propylene rubber (EPR) insulation rated 5kV, 90 degrees C, 133 percent insulation level, and polyvinyl chloride (PVC) jacket. Cable shall be suitable for use on a 5 kV, 3 phase, 3 wire, ungrounded system. Cable shall be suitable for use in cable trays.

Wires and Cables (600 Volts and Below)

Power distribution and lighting wire for indoor use shall be single conductor stranded copper, No. 12 AWG minimum, with NEC Type THHN, or THHN/THWN-2 insulation rated 90 degrees C, 600 volts.

Power distribution and lighting wire for outdoor use, for use in parking structures and tunnels, and for underground use in conduits shall be single conductor stranded copper, No. 12 AWG minimum, with NEC Type XHHW insulation rated 90 degrees C in dry locations and 75 degrees C in wet locations, 600 volts.

Insulated power cable for use as fire pump supply cables shall be able to pass the two hour fire rated test under UL 2196 test (and shall be so labeled), be NEC Type MI rated 600-volts ,and shall be one of the following types:

1. Mineral insulated, single conductor, solid copper conductor, using compressed magnesium oxide insulation, and shall have a liquid and gas tight seamless copper sheath. The cable is NEC Type MI. This cable is Factory Mutual (FM) approved, and

may be used without need for a 'clearance from FM... Install and support as required by manufacturer and Code.

2. Ceramfied silicone insulated (Lifeline), single conductor, stranded copper conductor, cermafied silicone rubber insulated. The cable to be NEC Type RHH. This cable is not FM approved. FM must review each application before giving an approval for that project. Install cable in EMT, and install and support as required by manufacturer and Code

Control wire shall be single conductor stranded copper, No. 14 AWG minimum, with NEC Type THHN, or THHN/THWN-2 insulation rated 90 degrees C, 600 volts.

Instrumentation and special systems wire shall be in accordance with manufacturer's recommendations, but shall not be less than No. 20 AWG.

Execution

Medium Voltage Primary Cables

Cables shall be pulled in lengths not exceeding 500 feet.

Cables shall be pulled using generous amounts of compatible cable pulling lubricant.

AE shall make calculations to insure maximum cable pulling tensions, sidewall pressures and cable bend radii do not exceed manufacturer's instructions.

Cables passing through manholes shall be trained neatly in the same relative position as in the duct bank, without crossing each other, and shall be supported by porcelain or fiberglass insulators attached to manhole cable racks.

Cables shall be identified by numbered tags. Identification numbers and tagging requirements shall be coordinated with the Plant Electric Shop through the Owner's Representative.

Wires and Cables (600 Volts and Below)

All wiring, including low voltage control, telecommunications, and power limited wiring shall be installed in raceways. (Raceways include conduits, ducts, trays, surface raceways, and wireways.) The only exceptions include:

1. NEC Type MI cable.

2. Control wiring at VAV boxes, serving sensors and actuators associated with that VAV box.

3. Type MC Cable serving light fixtures.

4. Type MC cable run in hollow wall cavities

5. Manufacture prepared wiring systems associated with lighting fixtures. An example of this would be, Lithonia 'RELOC'. Said systems shall have a corrugated metal cover.

Wiring of different voltage levels shall be segregated. Wiring of different voltage levels shall not share raceways (except wiring to rooftop receptacles, rooftop motor controls and motor disconnect early break auxiliary contacts may share raceways with motor feeders).

Six hundred (600)-volt power feeder wiring shall be spliced with solderless compression butt splices or ring lugs and terminated with solderless compression ring lugs.

Branch circuit wiring, lighting wiring, and control and instrumentation wiring shall be spliced with wire nut connectors.

Control and instrumentation wiring shall be terminated with solderless compression ring or spade lugs.

NEC Type MI cable shall be supported and protected in accordance with its manufacturer's instructions to maintain its UL fire resistive listing, and shall be spliced and terminated with special fittings from the same manufacturer as the cable.

Home runs of 20 amp branch circuits that exceed 150 feet in length shall be No. 10 AWG wire.

Home runs of 480 volt or 208 volt, 20 amp or 30 amp, single phase branch circuits that feed special receptacles shall be installed using 5 wires. Terminate the spare wires to ground at both ends.

Cables and wires terminated in panels shall be uniquely identified by permanent tags.

The shields of shielded instrumentation and control cables shall be grounded at one end only. The shields at the other end shall be insulated from ground.

Color Coding

All wiring shall be color coded, continuous color coded, or tape color coded at each termination and at each intervening 'box/point. 'If no color coding system exists, Campus circuits shall be color coded as follows:

1. Three Phase Power Over 600 Volts:
   - Phase X(A): Black
   - Phase Y(B): Red
   - Phase Z(C): Blue

2. Three Phase Power 480/277 Volts:
   - Phase X(A): Brown
   - Phase Y(B): Orange
   - Phase Z(C): Yellow
   - Neutral: Gray
   - Ground: Green

3. Three Phase Power 208/120 Volts:
   - Phase X(A): Black
   - Phase Y(B): Red
   - Phase Z(C): Blue
   - Neutral: White
   - Ground: Green

4. Single Phase Power 240/120 Volts:
   - Phase X(A): Black
   - Phase Y(B): Red
   - Neutral: White
   - Ground: Green

5. Fire Alarm Wiring (Being updated and expanded for easier identification):
   - Addressable Device: #18 Shielded Twisted Pair (STP) Red with Black Stripe
   - Horn, Horn/Strobe or ZAM Positive (+) 24 VDC: #14 Red
   - Horn, Horn/Strobe or ZAM Negative (-) 24 VDC: #14 Black
   - Speakers: #18 STP Solid Red
   - Strobe Light Positive (+): #14 Solid Yellow
   - Strobe Light Negative (-): #14 Solid Blue
   - Panel Communications: #18 STP Red with Black Stripe
   - Fireman's Telephone: #18 STP Red with Yellow Stripe

6. Synchronized Clock Wiring:
   - Line: Black
   - Neutral: White
   - Clock Correction: Red

7. Less Than 120 Volts: Use Industry Standard Methods

Site lighting wire insulation shall be in solid colors to match the circuit voltage and phase color code.

All UMHS owned facilities, unless noted otherwise, (University Hospital, THC, etc.) circuits shall be color coded as follows:

1. Three Phase Power Over 600 Volts:
   - Phase X(A): Black
   - Phase Y(B): Red
   - Phase Z(C): Blue

2. Three Phase Power 480/277 Volts:
   - Phase X(A): Red
   - Phase Y(B): Blue
   - Phase Z(C): Black
   - Neutral: Gray
   - Ground: Green

3. Three Phase Power 208/120 Volts:
   - Phase X(A): Yellow
   - Phase Y(B): Orange
   - Phase Z(C): Brown
   - Neutral: White
   - Ground: Green

4. Less Than 120 Volts: Use Industry Standard Methods

GROUNDING AND BONDING FOR ELECTRICAL

Scope

Provide grounding in accordance with the requirements of the NEC, these guidelines, and University Inspection Authorities.

The resistance of the completed ground system for standard installations shall not exceed 5 ohms. If any special equipment being installed requires a lower ground system resistance, that equipment manufacturer's maximum ground resistance shall apply.

The incoming power to the building shall always be considered the building's 'Service' (as defined by NEC Article 230), even if power is from another University facility. Size the bonding conductor in accordance with Article 230.

If equipment being installed requires a special or an isolated ground system, the equipment manufacturer's requirements shall be considered. Single point radial (star) ground systems are acceptable. Avoid providing an isolated ground system unless absolutely necessary to meet a manufacturer's warranty requirements.

When installing a new substation, either in an existing building or in an addition, connect the ground mats of the substations together. Also connect the new substation to building steel, the associated incoming duct bank (when a new duct bank entrance is installed), and to all water services.

Material Requirements

Grounding system conductors making up the grounding mat and associated ground risers, and/or for encasement in concrete shall be No. 4/0 AWG bare, stranded copper.

Ground conductors for all power distribution equipment, end-use equipment and all branch circuits, shall be insulated stranded copper conductors, color coded green or (a continuous) green color with 1 or more yellow stripes. The size shall be in accordance with NEC, except that none shall be smaller than No. 12 AWG.

Underground and concrete encased ground connections, all connections to and a-part-of the main substation grounding bar, and all ground connections to structural steel, shall be made using Cadweld exothermic weld-type connectors, or "Burndy Hyground" connectors.

Exposed ground connections to power generation and distribution equipment shall be made using copper compression ground fittings or compression lugs bolted to the equipment.

Splices and taps of ground conductors No. 8 AWG and larger shall be of the Cadweld exothermic weld type. Tape or coat all exposed splices and taps.

Design Requirements

Extend ground conductors from the ground system to all switchgear, transformers, unit substations, motor controllers, panelboards, control panel ground buses, and ground bars. Equipment rated above 480 volts, or 600 amperes shall be grounded by two independent grounding conductors.

The enclosures of all switchgear, transformers, unit substations, motor controls and panelboards shall be grounded by a separate grounding conductor to the ground system.

Motors rated 460 volts and below shall be securely bonded to the ground system either by means of a stranded copper ground conductor connected to building steel, or by a motor feeder ground conductor. Motors rated above 460 volts shall be bonded by 2 independent ground conductors.

A separate grounding conductor shall be used for all new feeders and branch circuits. Ground underground duct banks for primary or secondary power cables with a No. 4/0 AWG bare stranded copper ground wire that is run within the duct banks and is grounded at both ends.

Conduit shall not be used as the ground conductor.

Ground each manhole with 4 - 3/4 inch diameter by 10 feet long ground rods, one driven inside or outside of the manhole at each corner. Connect the ground rods with a No. 4/0 AWG bare, stranded copper ground wire loop. Pigtails from the ground wire loop shall be used to ground the manhole cover frame, ladder, concrete inserts or cable racks, duct ground wires, and the shields of any primary cables that are spliced in the manhole.

Ground the lightning protection system to separate ground rods. The main ground system shall not be used. Connect the lightning protection ground system, to the main grounding system, after the lightning protection system is completed and tested

Ground instrumentation and electronic devices in accordance with the NEC or the manufacturer's recommendations, whichever is stricter.

Conduits, cable trays and all other raceways shall be grounded/bonded in accordance with the NEC.

The shields of medium-voltage shielded power cables shall be grounded at both ends. The shields of shielded power cables spliced in a manhole shall also be grounded in the manhole.

The shields of shielded instrumentation cables shall have their drain wires grounded at one end only. The shield at the other end of the cables shall be isolated from ground.

Provide protection for ground conductors subject to physical damage or abuse. Where metallic conduit is used for physical protection of a ground conductor, the conductor shall be bonded to the conduit at both ends.

Installation Requirements

Instruct the Contractor to test the grounding in accordance with Section 16950, and to provide the University Project Coordinator with test reports

ELECTRICAL MATERIALS AND METHODS

Scope

Provide raceways for all wiring. All exposed and concealed wiring (including low voltage control, telecommunications, and power limited wiring) shall be installed in raceways.

Provide spare raceways for future use.

- From recessed lighting and receptacle panels, to the above ceiling spaces for future circuits.
- In parking structures for future CCTV cameras and entrance controls.
- In animal rooms, and at environmental rooms, for future environmental monitoring.
- Telecommunications conduits on laboratory benches for future data connections.
- Power and data conduits in wet laboratories for clusters of high-powered computers.

Related Sections

Design Guideline Sections:
260543 - Underground Services for Electrical Systems

U-M Standard Details:
260000 Series - Electrical Standard Details

Conduits

Specify 1/2 inch through 4 inch diameter electrical metallic tubing (EMT) for indoor concealed, and exposed installations, not encased in concrete.

Specify galvanized rigid steel conduit or intermediate metal conduit (IMC) for:

- Indoor installations over 4 inches in diameter.
- Indoor installations embedded in concrete.
- Indoor installations of primary power cables and fire pump supply cables. Also encase these conduits in 2 inches (minimum cover) of concrete where they are routed through the building. As an alternative, NEC Type MI cable may be used without raceways for fire pump supply cables, but only with special permission.
- Outdoor installations above ground.

Specify Schedule 40 PVC conduit for installations embedded in concrete, except as noted in Section 16110.

Specify standard wall, fiberglass reinforced epoxy, conduit for installations in parking structures, tunnels and on cooling towers.

Specify flexible metallic conduit for final connections to recessed lighting fixtures. As an alternative, manufactured wiring systems or Type MC cable may be used above accessible ceilings. Manufactured wiring systems or Type MC cable shall not be used above permanent ceilings or in walls.

Specify liquid tight flexible metallic conduit for final connections to transformers, motors and other equipment subject to vibration or removal for maintenance. Final connections to transformers in electrical rooms only may be non-liquid tight flexible metallic conduit.

Connections to recessed power receptacles, and light switches, in areas with accessible ceilings:

A. In new 'metal stud and gypsum board partitions (walls)', the final connections may be made with type MC cable. This MC cable, shall:

   1. Be run to a box immediately above the accessible ceiling, and the box size shall not exceed 4-11/16" square.
   2. Conduit shall be used for the entire run, from this junction box, to the power source, load (lights), etc.
   3. No more than three circuits may be run through any given junction box.
   4. Individual conductors making up the MC cable shall be stranded copper, with separate grounding conductor, and steel corrugated armor. Individual conductors shall be color coded as required in section 16120.
   5. The MC cable is terminated using UL listed hardware intended for the cable and boxes being used, (and rated for commercial and industrial environments).
   6. The MC cable shall be secured in the wall cavity as required by NEC
   7. The MC cable shall be as short as it is necessary to serve the need and meet the Code

B. In existing 'metal stud and gypsum board partitions (walls)', where the wall is not being otherwise opened up, the final connections to new devices may be made flexible conduit and standard (separate) conductors. This flexible conduit shall:

   1. Be increased in size as necessary to maintain the proper fill for the wiring to be installed.
   2. Shall be installed and secured as required by NEC.
   3. Shall be as short as it is necessary to serve the need and meet the NEC.

C. In all other wall types and conditions use standard conduit, of the type appropriate for the wall construction.

Connections to other recessed devices, (including communication outlet boxes, junction or pull boxes, etc) shall be with standard conduit of the type appropriate for the wall constructionCable Trays

Specify ladder-type cable trays for:

- Telecommunications cables in telecommunication rooms, in laboratories, and corridors with open or accessible ceilings, and under computer room raised floors.
- Avoid installing cable trays in air plenum spaces.
- Overhead primary cables within substation rooms.

- Provide rollouts or vertical drops for routing the cables into the substation's primary switches.

Avoid specifying center spline cable trays, except where obstructions or support restrictions make installation of ladder cable tray impractical.

Surface Raceways

Where conduits cannot be concealed, specify metallic or plastic surface raceways for indoor exposed installations in finished areas to feed surface mounted outlets.

Boxes

Specify sheet steel switch and outlet boxes for use with EMT, and cast or malleable iron boxes for use with galvanized rigid steel conduit and IMC.

Specify PVC boxes for use with PVC and fiberglass reinforced epoxy conduit.

Specify compatible boxes, from the same manufacturer and of the same product line, for use with surface raceway installations.

Products

Conduits

Electrical metallic tubing shall be thin wall steel tubing, electro-galvanized or hot dipped galvanized inside and outside. Fittings and bushings shall be galvanized steel setscrew type connectors. Conduits 2" and larger will have fittings and bushings with two screw connectors.

Galvanized rigid steel conduit and intermediate metal conduit shall be hot dipped galvanized inside and outside, in 10' lengths and threaded on both ends. Fittings and bushings shall be threaded, cast or malleable iron, and hot dipped galvanized inside and outside.

PVC conduit and fittings shall be Schedule 40 and UL Labeled for 90 degrees C cables. Fittings shall be Schedule 40, solvent type, and from the same manufacturer as the conduit.

Fiberglass reinforced epoxy (FRE type) conduit shall be standard wall thickness, iron pipe size, sunlight resistant, and gray or black color. Fittings shall typically be push-fit on straight sections and solvent type at fittings and boxes. Connections of FRE conduit to PVC boxes shall be made with solvent type threaded fittings. Fittings shall be from the same manufacturer as the conduit.

Flexible metallic conduit shall be galvanized steel or aluminum. Fittings shall be of steel with cadmium or galvanized finish. Fittings shall be machine screw clamp type, single or two-piece. Self-locking, twist-in type fittings are not acceptable.

Liquid tight flexible metallic conduit shall consist of a flexible, galvanized steel core, a continuous copper ground strip and a polyvinyl chloride jacket. Fittings shall be steel liquid tight grounding type and from the same manufacturer as the conduit.

Cable Trays

Ladder type cable trays shall be aluminum with a 4-inch (minimum) rail height, and 9 inch maximum rung spacing. Rungs shall provide a flat surface for cable support of at least 5/8". The tray with a 10' span shall be capable of sustaining a working load of 75pounds per lineal foot (50 pounds of cable per foot, plus a 250 pound person sitting at mid-span), with a load deflection of 1.0 inch maximum when tested in accordance with NEMA VE1-3.01. 'Fittings' shall be from the same manufacturer and product line as the tray, and shall also have a 9-inch maximum rung spacing, and a 12-inch minimum bend radius. The side rail (or equivalent) shall be continuous through the 'fittings'. Preferred, but not required, are pre-drilled mounting holes on the upper surface of the side rails - will facilitate conduit terminations at the tray

Center spline cable tray (when allowed) shall be aluminum with top mounted rungs, 3 inch (minimum) load depth, ¾" inch minimum (flat) rung width, and 9 inch maximum rung spacing. The tray with a 10' span shall be capable of sustaining a working load of 75 pounds per lineal foot (50 pounds of cable per foot, plus a 250 pound person sitting at mid-span), with a load deflection of 1.0 inch maximum when tested in accordance with NEMA VE1-3.01. Fittings shall be from the same manufacturer and product line as the tray, and shall have a ¾" inch minimum rung width, a 9 inch maximum rung spacing, and a 12 inch minimum bend radius.

Tray fasteners shall be galvanized or zinc plated steel; and shall be configured and installed so no sharp, or threaded surfaces, protrude in the 'cable space'.

Surface Raceways

Surface raceways shall consist of a base and cover of. 040-inch thick minimum zinc plated or galvanized steel, or PVC, sized for the number of conductors contained within. Complete the installation with all connectors, fittings, bushings, boxes, covers and mounting hardware from the same manufacturer. All materials for a given location shall be of same color; with the color specified being one of the manufacturer's standard finishes.

Provide barriers to separate conductors of different voltages, or services.

Surface raceways shall be sized so that the installed wiring does not exceed NEC specified fills, and the minimum bend radius of the installed wiring is not violated - even at outlet box locations. [The telecommunication wiring will be Category 5E (4 pair), Category 6 (4 pair cable) and/or fiber strands, all to be installed without violating their minimum bend radius.]

Owner Installed Telecommunication Wiring

When calculating raceway fills, for telecommunication raceways assume 3, 4-pair, cables to each telecommunication outlet. This is the standard currently being used by the University

Boxes

Fixture, switch, outlet, splice and wire pulling boxes shall be cast or formed from carbon steel sheets of commercial grade steel not less than 14 gauge. Boxes shall be of one-piece construction, zinc or cadmium plated. Boxes shall be tapped for installing covers and plates as required.

Steel pull and junction boxes shall be rated NEMA 1 indoors, or NEMA 3R minimum outdoors, fabricated from galvanized or painted code gauge cold rolled carbon steel sheets. Boxes shall be of welded construction with flat, removable covers. Box covers shall be fastened in place by machine screws or hinges and latches. Self-tapping or sheet metal screws are not acceptable.

PVC pull and junction boxes shall be rated NEMA 3R minimum, molded in one piece, with integral mounting feet and flat, gasketed, removable covers. Box covers shall be fastened in place by machine screws. Self-tapping or sheet metal screws are not acceptable.

Supports

Hangers and brackets shall be made of steel pipe, channel iron, angle iron or prefabricated steel channel, and shall be galvanized or painted.

Hangers shall be of sufficient strength, and spaced, such that their deflection at any point does not exceed 1/240 of the hanger span length after the supported equipment, conduits, cable tray and cables are installed.

Anchors for heavy and large loads, mounted to gypsum board, hollow tile, block, or similar surfaces, shall be toggle bolt type. Install metal backer plates as needed for concentrated, or extra heavy, loads to be mounted to gypsum board walls. For heavy or large loads mounted to solid surfaces, use metal expansion, or epoxy anchors. Use lead shield anchors, or plastic expansion anchors, for supporting smaller loads. Powder-driven anchors shall not be used.

Execution

Raceways

Minimum power and control conduit size shall be 1/2 inch. Minimum telecommunications conduit size shall be 1 inch.

All medium (primary) voltage raceways, and any other raceways above 4", shall be rigid.

FRE raceways and PVC boxes shall be used in parking structures, tunnels, cooling tower enclosures, and all other areas with high humidity and/or corrosive environments. Tunnels sections passing through building mechanical rooms (and other related areas) are not exempted from these requirements even if non-FRE conduits are currently present.

Conduits in finished areas shall be concealed wherever possible and practical. When conduits cannot be concealed in finished areas, surface raceways shall be used.

Concealed and exposed raceways shall be installed parallel to or at right angles to building lines. Surface raceways shall be installed as close to room corners or trim features as possible to make the surface raceways less obvious. Use the surface raceway to route the wiring to a junction box above the finished ceiling whenever possible.

In renovation areas, with existing gypsum board walls, flexible conduit may be used from the new outlet box in the wall, to a junction box mounted on the wall immediately above the accessible ceiling. Size flex raceway to maintain equivalent cross-sectional area.

Raceways and other electrical equipment shall be separated from steam pipes, hot water pipes, and other hot surfaces by a minimum of 4 inch horizontally or 12 inch vertically.

Raceways and other electrical equipment shall be separated from ductwork and pipes so that they do not come into contact with each other.

Low voltage signal circuits shall be separated, or shielded, from power circuits to prevent the induction of noise into the signal circuits.

Raceway fittings and bends shall have bend radii greater than the minimum bend radii of the cables enclosed.

Metal raceways, fittings, boxes and enclosures shall be mechanically joined together to form a continuous electrical conductor providing effective electrical grounding continuity. This requirement, does not, however, negate the Guideline requirement for separate grounding conductors for all power circuits (as defined in Guideline Section 16450)

Raceway expansion fittings shall be provided at the intervals specified by the manufacturer, and all building expansion joints.

Directional changes in primary conduits above ground shall be made with 3’ minimum radius sweeps and long radius elbows. Those underground shall be with 20' minimum radius bends.

Conduits entering panels located outdoors, in parking structures, in steam tunnels and on cooling towers shall enter from the sides, back, or bottom. Conduits shall not enter from the top.

Weep holes shall be drilled in the bottom of all switch and outlet boxes installed in parking structures and tunnels.

Mounting Heights

Equipment and devices shall be installed at the following heights:

- Receptacles (Wall): 18" A.F.F. to center
- Receptacles (Above Counter): 48" A.F.F. to center
- Receptacles (Unfinished Area): 48" A.F.F. to center
- Surface Raceway Receptacle Strips: 42" A.F.F. to bottom (unless noted otherwise)
- Light Switches: 48" A.F.F. to center
- Telephone Outlets (Wall Phone): 54" A.F.F. to center

- Telephone/Data Outlets: 18" A.F.F. to center
- Clock Outlets: 88" A.F.F. to center
- Fire Alarm Pull Stations: 48" A.F.F. to center
- Fire Alarm Horn/Strobes: 80" A.F.F. to bottom or 6” below ceiling (whichever is lower)
- Card Readers: 48" A.F.F. to card slot
- Security System Controls: 48” A.F.F. to center
- Thermostats/HVAC Controls: 48” A.F.F. to center
- Electrical Panels: 72" A.F.F. to top
- Safety Switches/Motor Starters: 72" A.F.F. to top (except top of handle shall not exceed 78" A.F.F.)
- Motor Control Switches/Pushbuttons: 60" A.F.F. to center

Supports

Electrical equipment and raceways shall be supported independently of supports provided by other trades.

Equipment (other than conduit) to be surface mounted to masonry or concrete walls shall first be secured to steel channels that in turn are mounted to the wall. Do not mount the equipment directly to masonry or concrete.

Equipment to be surface mounted on other wall surfaces may be directly mounted to the wall, unless the equipment's load exceeds the strength of the wall material. Where weight exceed wall capability, in finished areas, install steel backer plate in the wall. In unfinished areas install steel channels as noted above to spread the load.

Floor mounted equipment shall be secured to 4 inch thick concrete housekeeping pads. Pads to be sized 4 to 6 inches longer, than equipments length and width. Bevel edge of pads, and reinforce as appropriate.

Conduits and boxes shall be supported using steel conduit straps or 1/4-inch minimum diameter threaded rod hangers. Conduits shall be supported at intervals not exceeding 10 feet. Suspended ceiling hangers or hanger wire shall not be used (except to support manufactured wiring system cables and Type MC cables).

Cable trays shall be supported with support brackets or 3/8-inch diameter minimum threaded rod hangers at intervals not exceeding 8 feet for straight runs. Additional supports shall be provided at tray fittings.

Flexible metallic conduit to motors and similar equipment shall not exceed 3 feet in length, and shall have adequate slack to absorb the maximum vibration.

Flexible metallic conduit to lighting fixtures shall not exceed 6 feet in length. Place box and flex conduit so the light fixture can be lifted out of accessible ceilings when required, and/or long enough to place fixture in adjacent 'tile' location

Flexible metallic conduits, and manufactured wiring system cables, shall be routed parallel to or perpendicular to building lines, in a neat and workmanlike manner. Any excess cable shall be coiled and supported independently of the ceiling grid system at intervals not exceeding 3 feet. Said cables shall not lie on the ceiling tiles. These same requirements shall apply to cables placed below raised floors.

Penetrations, Sleeves and Seals

Scanning for electrical conduits shall be performed prior to core drilling concrete floors.

- Use a Hilti Ferroscan or similar impulse induction type scanner capable of detecting both metallic conduits and copper wires in PVC conduits. Tracers that scan for energized cables or that scan for injected high frequency signals are not acceptable.
- Notify the Owner's Inspection Department prior to all tests.
- Prior to core drilling, arrange for the Owner's Representative to notify building occupants of the potential for an unscheduled power outage.
- Conduits damaged during core drilling shall be restored immediately at the Contractor's expense.
- Penetrations shall be cut neatly and to the minimum size required for installation of the equipment and raceways.

Galvanized steel pipe sleeves shall be provided for conduits penetrating floors, exterior walls and roofs. As an alternative in floors, a Hilti CP680 Cast-In Firestop Device may be used.

- Extend floor sleeves above the floor a minimum of 2 inches.
- Embed sleeves in new concrete or step-core concrete and grout sleeves into existing concrete with epoxy grout.
- Seal floor sleeves using fire-sealing systems approved by a Nationally Recognized Testing Laboratory.
- Seal exterior wall and roof penetrations water tight.

Conduit penetrations in walls shall be patched on both sides to seal against the passage of air, sound, smoke, and fire.

- Seal conduit penetrations in fire rated walls using fire-sealing systems approved by a Nationally Recognized Testing Laboratory.
- Seal conduit penetrations in non-rated walls using masonry materials that match the wall construction.

Cable tray penetrations in fire rated walls shall be sealed using fire sealant bag or brick systems approved by a Nationally Recognized Testing Laboratory.

Recessed outlet boxes, located less than 24 inches apart, on opposite sides of a fire rated wall, with box openings over 16 square inches, shall both be fire sealed.

Identification

Systems and equipment shall be provided with nameplates indicating their name or number, and power source. Nameplates shall be engraved 1/8-inch thick plastic with black letters on a white background, and letters at least 1/4 inch high. Nameplates shall be attached with a minimum of two mechanical fasteners such as sheet metal screws or bolts and nuts. Embossed plastic tape labels are not acceptable.

Receptacle and switch plates shall be labeled to indicated panel and circuit serving the device. Also mark the same circuit information, inside the outlet box, using indelible ink. "Black on clear Dymo", tape markers, are acceptable for this requirement

Junction boxes and box covers of special circuits shall be color coded as follows:

- Emergency power and Fire Alarm Circuits: Red Paint
- Temperature Control Circuits: Blue Paint
- Clock Circuits: Orange Paint

Junction box covers shall be marked in indelible ink, with the panel name, and breaker numbers of the circuits contained within.

Conduits and cables in the University tunnel system shall be banded at major changes in direction, junctions, entrances to buildings and every 25 ft on straight runs. Banding shall be tape similar to Scotch #33 electrical tape, which is suitable for high temperatures.

- Electrical Power: Red
- Clock System: Red with Purple
- Radio System: Red with Silver
- Computer System: Red with Yellow
- High Voltage: Red

UNDERGROUND SERVICES FOR ELECTRICAL SYSTEMS

Scope

Provide concrete encased duct banks for primary (medium voltage) power distribution cables, and telecommunications cables.

Provide direct buried ducts for secondary power cables, site lighting cables, and dedicated telecommunications circuits.

Always provide spare ducts in concrete encased duct banks. When installing direct buried ducts under sidewalks, walkways and other paved areas, install a least one additional; 6" PVC sleeve for installation of future ducts without the need to re-open the paved area.

Related Sections

Design Guideline Sections:
033053 - Miscellaneous Cast-in-Place Concrete
265600 - Exterior Lighting

U-M Standard Details:
260000 Series - Electrical Standard Details

Underground Ducts

Specify Type DB PVC conduit for concrete encased duct banks, except where galvanized rigid steel conduit is required for additional strength.

Specify Schedule 40 PVC conduit for direct buried ducts, except where galvanized rigid steel conduit is required for strength or due to inadequate cover.

Under roadways, driveways, parking lots and sidewalks, and all other paved areas, specify Schedule 40 PVC conduit sleeves to enclose direct buried ducts.

Manholes and Pull Boxes

Specify reinforced concrete manholes where required to:

1. Satisfy cable routing needs, to control pulling tensions, and for cable splicing.

2. Keep duct lengths to 400 feet or less on straight runs. Longer runs are acceptable only when calculations are completed showing that pulling tensions, and sidewall pressures are not exceeded in the longer pull.

3. Keep the maximum amount of bends between manholes to no more that 180 degrees.

a. When bends are present the maximum length of the duct must be appropriately reduced so the limiting (maximum) pulling tension, and maximum sidewall pressures of the cables are not exceeded.

b. Designer shall do sufficient calculations to insure that the two, above noted, limiting factors are not violated.

c. The typical medium voltage feeder being installed is composed of 3-1/C, 350 MCM copper, 15kV (ungrounded) cables, with tape shields, and EPR insulation rated for 133% of the 15kV nominal rating.

Specify pre-cast polymer pull boxes, only in owner-approved locations, where adequate space does not exist for the installation of manholes.

Manholes and pull boxes shall be accessible on at least 3 sides by trucks, cable reel trailers and other cable pulling equipment.

Products

Underground Ducts

PVC conduit for concrete encasement shall be Type DB, 4-inch diameter minimum, UL Labeled for 90 degrees C cables. Fittings shall be Type DB, solvent type, and from the same manufacturer as the conduit.

PVC conduit for direct burial shall be Schedule 40, UL Labeled for 90 degrees C cables. Fittings shall be Schedule 40, solvent type, and from the same manufacturer as the conduit.

Galvanized rigid steel conduit shall be hot dipped galvanized inside and outside, in 10 foot lengths and threaded on both ends. Fittings and bushings shall be threaded, cast or malleable iron, and hot dipped galvanized inside and outside.

Sleeves shall be Schedule 40 PVC conduit, 6-inch diameter, UL Labeled for 90 degrees C cables. Couplings shall be Schedule 40, solvent type, and from the same manufacturer as the conduit.

Concrete shall have a minimum strength of 3,000 psi at 28 days.

Marker tape shall be plastic, vinyl, or Mylar, 6 inches wide, red for electrical power and orange for telecommunications, and labeled to indicate the type of circuit buried below.

Manholes

Manholes shall be precast, or cast in place, and shall be steel reinforced as needed, to achieve an MDOT highway loading of H-20.

Provide a cast iron frame with cover, a galvanized steel ladder, and galvanized pulling eyes embedded in the concrete opposite each duct entrance and in the floor beneath the cover.

Provide a sealed depression in the floor offset slightly from the center, for installation of a portable sump pump. Drains shall not be installed in floors.

Manholes placed in 'green-belts' and like areas shall have manhole covers with a lighter duty rating (the manholes themselves and the 'ring', however, are the same as required for the MDOT, H-20 rating)

All duct entrys into manholes shall include provisions for bell end fittings and a means to securely 'securing' the duct bank(s) to the manhole wall

1. Precast, or cast-in-place, manholes shall be delivered (or constructed) with the ducts openings cast in place.

2. Provisions for known future ducts shall have knockouts installed, with the bell end fittings included.

3. When installing multiple new ducts into manholes without proper knockouts, cut an opening in the manhole wall, rework steel reinforcing, and install ducts, all in accordance with the associated U of M standard detail.

4. Alternately, when installing multiple new ducts into manholes without proper knockouts, the duct openings may be core drilled at the proper locations. The diameter of the corings, however, shall be 2 to 4" larger than the duct being installed. This larger opening will allow proper grouting of the ducts and bell ends into the manhole wall.

Electrical Power Manholes

Electric power manholes shall have inside dimensions of 10 feet long by 10 feet wide by 7 feet high. Duct entry points shall be offset from the center of the wall to allow easier training of the cables along the walls of the manhole. Provide a grounding system for each manhole and connect this to grounds run with power duct banks. Make all grounding system connections using exothermic welds, or copper (or bronze) fittings as manufactured by Burndy Hyground System.

The frame and 36" cover for electrical power manholes shall be East Jordan Iron Works 1580C in high loading areas, or 1581-51 in green belt areas. Both have the lettering, “UM ELEC”.

Electric power manholes shall be equipped with 3 Aickenstrut (non-metallic) stanchions per wall, each bolted to the wall with stainless steel Rawl bolts. Each stanchion shall be fitted with 1 Aickenstrut (non-metallic) cable support arm.

Telecommunication Manholes

Telecommunications manholes shall have inside dimensions of 12 feet long by 6 feet wide by 6.5 feet high. Duct entry points shall be offset from the center of the wall to allow easier training of the cables along the walls of the manhole. Ducts shall only enter on the shorter end walls, not on the long walls. The frame and 27" cover for telecommunications manholes shall be East Jordan Iron Works 1805C with the lettering, “UM TELECOM”.

Telecommunications manholes shall contain 7 full height vertical concrete inserts in each long wall, and 2 in each short wall. Inserts shall be 1-5/8 inch hot dipped galvanized Unistrut type channel or Aickenstrut nonmetallic channel of equal size and strength. Corner inserts shall be equipped with 12 inch corner brackets and side inserts shall be equipped with 3 inch side brackets to support full height perforated cable support racks. Each long wall shall also be equipped with 2 copper ground bus bars, 6 inches long by 2 inches wide by 1/4 inch thick, on 2 inch metal stand-offs bolted to the concrete.

Pull boxes

Pull boxes shall be precast polymer concrete or polymer foam, heavy duty rated, bottomless, with a single piece cover. Pull boxes shall be one size larger than required to loop cables out of the opening and back in again without exceeding the minimum bend radii of the cables. Covers shall be of sufficient strength to withstand the weight of a riding lawn tractor or small truck, engraved “UM ELECTRIC”, “UM TELEPHONE”, or “UM OUTSIDE LIGHTING” as applicable, and attached with pentahead stainless steel bolts.

Grounds

Ground splices and connections at manholes and pull boxes, where required, shall be exothermic welds, or copper (or bronze) compression ground fittings, or bolted compression ground fittings.

Execution

Excavation and Backfill

Miss Dig shall be contacted at (800) 482-7171 before performing any excavation work.

Provide barricades around open holes and trenches, temporary bridges over trenches cut through major sidewalk routes. Major sidewalk routes shall not be closed to pedestrian traffic.

Trees, shrubs and plantings in the area of excavation shall be removed by the Plant Grounds Department in advance. Provide barriers to protect landscaping adjacent to the excavation area.

Remove rocks, concrete, or other debris encountered during excavation.

Where sidewalk sections must be removed for installation of underground ducts, remove the sidewalk sections (flags) completely from joint to joint.

Cut asphalt to be removed for installation of underground ducts, in two, straight, parallel lines.

Backfill excavations in 6 inch layers and mechanically compact to 98 percent compaction. Excavated materials may be used as backfill only if the backfill is sand or clean dirt that is free of rocks and debris over 3/4 inches in diameter. Dispose of clay, rocks, concrete and other debris, and replace with MDOT Class II sand.

In landscaped areas, backfill and mechanically compact to a depth of 6 inches below grade. Backfill the last 6 inches with clean topsoil, and reseed affected lawn areas.

Restore concrete sidewalks and asphalt in accordance with University Guidelines.

Underground Ducts

Slope duct banks downward, toward manholes, and away from buildings, a minimum of 6 inches per 100 feet. Duct banks shall not route water from manholes into buildings, or contain traps between manholes where water may accumulate.

Directional changes in duct banks shall be made with 20' minimum radius bends. Where this radius cannot be accommodated, perform detailed pulling tension, and sidewall pressure, calculations, to insure compliance with cable manufacturer's recommendations.

Duct banks and direct buried ducts shall be supported on undisturbed soil or on piers extending down to undisturbed soil.

Where primary voltage power, and telecommunications, duct banks run in parallel, they shall be separated by a minimum of 12 inches of soil or concrete - vertically and/or horizontally. If the services need to be placed one upon the other the (vertically stacked), the power ducts shall be above the telecommunications ducts

Primary duct banks shall include No. 4 steel reinforcing bars. Telecommunications duct banks do not require steel reinforcing.

Ground primary duct banks with a No. 4/0 AWG bare stranded copper ground wire that is run within the duct bank and is grounded at both ends. . Direct buried ducts shall be grounded by insulated, stranded copper ground wires installed in each duct. Telecommunications duct banks do not require grounding

Prior to concrete encasement, ducts, reinforcing steel and ground wires shall be secured with nonmetallic straps or cable ties to nonmetallic duct spacers at intervals not exceeding 8 feet. Duct spacers shall be sized for the ducts being held, and shall provide the minimum spacing between ducts required for concrete flow and by the NEC. Duct spacers shall be anchored to the ground using nonmetallic bands and stakes.

Duct banks shall have a minimum of 3 inches of concrete cover on all sides.

Provide bell end fittings on ducts where the ducts enter manholes or buildings. Note that the use of a coupling on the end of a length of PVC pipe, is not the equivalent of a bell end fitting

- only true 'bell end fitting' shall be used to meet this requirement. The duct(s) and associated bell end fittings shall be securely grouted into the wall of the manhole and/or building.

Where duct banks enter manholes or buildings, they shall be constructed as an integral part of the wall. (Do not core-drill the wall and then install end bell fittings to the edge of core-drilled hole without prior written approval from the Utilities and Plant Engineering Department.) Duct bank shall extend to the inside surfaces of the walls, and the duct bank reinforcing shall be integrated with the wall reinforcing.

Direct buried ducts and fittings shall have bend radii greater than the minimum bend radii of the cables enclosed, and shall not be smaller than the radii of standard manufactured elbows.

Route direct buried ducts at right angles to building lines and site features, and as close to curbs and sidewalks as possible to avoid interferences with future landscaping.

Where direct buried PVC ducts cannot be buried deep enough to meet the NEC minimum cover requirements, rigid steel conduits shall be installed instead, or a concrete cover shall be poured over the ducts.

Place marker tape approximately 12 inches above duct banks or direct buried ducts for the entire length of the duct run.

Contractor shall cleanout the duct, using a flexible mandrel and a stiff bristled brush, prior to cable pulling. Leave a pulling string in the duct when cleanout is complete. This will serve as the duct identification on both ends of the run

Manholes and Pull Boxes

Manholes shall be installed on a base of pea gravel or MDOT Class II sand at least 12 inches deep. Pull boxes shall be installed on a base of pea gravel or MDOT Class II sand at least 6 inches deep.

Pull boxes shall be located in mulched areas wherever possible and shall be level with the existing grade.

Provide metal barriers in pull boxes containing circuits of two different voltages, or containing both power and telecommunications circuits.

Ducts shall enter telecommunications manholes on the short sides only. Ducts may enter primary manholes on any side, but should be positioned to permit installation of additional ducts in the future. Ducts should enter as perpendicular to the wall surface as possible.

Ground electric power manholes with four, ¾ inch diameter by 10 foot long, ground rods, one driven inside of the manhole at each corner. Connect the ground rods and any duct bank ground conductors together with a No. 4/0 AWG bare, stranded copper ground wire loop. A No. 2 AWG bare stranded copper pigtail from the ground wire loop shall be used to ground the manhole cover frame, ladder support bracket, any metallic concrete inserts and metallic cable racks, and the shields of any cables that are spliced are to be grounded in the manhole.

Sleeves

Sleeves shall be buried at a minimum depth of 24" to their top. Sleeves shall extend a minimum of 12" beyond the paved areas they pass under.

Spare sleeves shall be taped closed at both ends with duct tape.

Ends of spare sleeves shall be marked with steel stakes, pipes or conduits that are 3' long minimum, driven vertically down at the sleeve ends to a depth of 6" below grade to their top.

A marker tape shall be buried in the backfill approximately 12 inches above the sleeves for the entire length of the sleeves.

Quality Assurance

The Owner's Code Inspection Department shall be contacted at (734) 764-2457 before pouring concrete and before backfilling excavations.

ELECTRICAL ACCEPTANCE TESTS

Scope

This guideline defines the standard tests that all electrical systems and equipment must pass prior to final acceptance by the University. These tests are in addition to acceptance tests specified by equipment manufacturers or defined in the other Design Guidelines sections. Obtain permission through the Design Manager before specifying tests less than or in excess of these tests.

Related Sections

Design Guidelines Technical Sections: All
Electrical Trades Preferred Manufacturers List
U-M Master Specifications: All

References

ANSI/NETA ATS, "Standard for Acceptance Testing Specifications"
NFPA 70, "National Electrical Code"
NFPA 72, "National Fire Alarm Code"

General

Acceptance tests shall be performed in accordance with the current version of ASNI/NETA ATS and by an independent testing agency. Specify only the independent testing agencies listed in the latest Electrical Trades Preferred Manufacturers List.

Tests shall be performed in accordance with applicable codes, standards, and equipment manufacturers' instructions.

The Contractor shall provide all test equipment, materials and labor necessary to perform the tests, and shall coordinate with the other trades for necessary services, such as scaffolding and the uncoupling of motors.

Tests shall consist of visual inspections, manual operations, and electrical testing under all normal and expected abnormal operating conditions.

The Owner shall be notified at least 3 working days in advance of all tests.

Tests shall be witnessed by the Owner unless such witnessing is waived in writing.

The Owner shall be provided with a written test report, signed and dated, for all tests.

Testing Criteria

High potential tests shall be performed at the AC or DC voltage listed in ASNI/NETA ATS unless specified otherwise herein. Do not perform more than one high potential test on any item without authorization from the Owner.

Dielectric absorption tests shall be performed with a 2,500 volt DC megger.

Megger tests shall be performed at a DC voltage of 1,000 volts for 600 volt rated equipment, and at a DC voltage of 500 volts for 120-300 volt rated equipment.

Continuity checks shall be performed with a low voltage DC meter, light or bell.

The resistance to ground shall be measured using either the three point method or the fall-of-potential method.

Test instruments shall be calibrated to national standards to insure the accuracy of tests. These calibration reports shall be made available to the Owner when requested. Depending upon frequency of use, the instruments shall be calibrated at least every 12 months.

Visual Inspections

Prior to manual operation and electrical testing, verify the following:

- The equipment complies with the contract documents and the shop drawing submittals.
- The equipment is completely and properly installed according to the contract documents and the manufacturer's instructions.
- Adequate working space exists around the equipment to fully open doors and access panels, and to access all components that require maintenance.
- The equipment is free from damage and defects.
- Shipping blocks and restraints have been removed.
- The equipment has been aligned.
- The equipment has been lubricated.
- The ventilation louvers are open and unobstructed.
- Electrical connections have been tightened.
- Voltages, phases, and rotation have been identified.
- Terminations have been identified.
- Equipment labels have been installed.
- The equipment has been calibrated.
- The equipment is ready to be electrically tested.

Manual Operations

Prior to electrical testing, verify the following:

- Mechanical components operate smoothly and freely.

- Mechanical stops, limit switches, etc., are properly adjusted.

Electrical Acceptance Tests

Duct Banks

A stiff bristled brush shall be pulled through each duct to clean out dirt and debris.

A solid mandrel rated for the inside diameter of the ducts and at least 5 inches long shall be pulled through each duct to verify the absence of kinks, flat spots, and other obstructions. The Owner may require the use of the Owner's mandrel.

Medium Voltage Primary Cables

A continuity test, a 2,500 volt DC megger test, a DC high potential test, and a second 2,500 volt DC megger test shall be performed on 15 kV primary cables after the cables have been spliced or terminated. The high potential test shall be performed at 45kV on new cable installations and at 30kV on existing installations or when new cable has been spliced to existing cable.

600 Volt Power Cables

A continuity check and a 1,000 volt DC megger test shall be performed on 600 volt power cables No. 4 AWG and larger. The megger test shall be performed between each pair of conductors and from each conductor to ground. Each test shall be performed for 15 seconds or until the insulation resistance value stabilizes.

The insulation resistance between conductors, and from each conductor to ground, shall be 100 megohms minimum in one minute or less. In addition, the lowest insulation resistance value shall not differ from the highest value by more than 20 percent. If all megger readings for a given circuit are above 1000-meghoms, the 20 percent balance requirement may be waived.

Control Cables

A continuity check shall be performed on control and instrumentation wiring.

Substation Primary Switches

A continuity check, a 2,500 volt DC megger test, and a 37 kV DC high potential test shall be performed on primary switches.

Substation Transformers

A DC megger test and a turns ratio test shall be performed on unit substation transformers. The DC megger test shall be performed at 2,500 volts on coils rated over 600 volts, and at 1,000 volts on coils rated 600 volts and below. A turns ratio test shall be performed on each tap.

Verify proper setting and operation of the fan control panel to insure it and the fans are operable and functional. Temperature test the probes in each winding.

Substation Secondary Switchgear

A continuity check and a 1,000 volt DC megger test shall be performed on the buses and on the main, tie, and feeder breakers.

A ducter (contact resistance) test shall be performed on main, tie, and feeder breakers in unit-substations. Maximum readings shall not exceed manufacturer limits.

The overcurrent devices of substation breakers with electronic trip units shall be tested using the primary current injection method. Secondary current injection shall not be used.

Molded case circuit breakers with thermal/magnet trips shall not be primary current injection tested.

A 1,000 volt DC megger test and a turns ratio test shall be performed on CT's and PT's.

The metering shall be calibrated.

Engine-Generators and Automatic Transfer Switches

A continuity check and 1,000 volt DC megger test shall be performed on the generator windings, generator circuit breaker, power circuit portions of the automatic transfer switches, and the interconnecting power circuit wiring.

A continuity check shall be performed on the control wiring.

The metering and time delay relays shall be calibrated and tested.

The manufacturer’s recommended normal start-up testing shall be performed.

A load bank test shall be performed on the generator with a load bank rated at 100 percent of full generator output for a period of at least 120 minutes.

If the engine is natural gas fueled and Compliant Capable rather than Certified as defined in EPA 2009 NSPS emissions standards, an EPA Initial Performance Test shall be performed. This test shall consist of three separate 1 hour runs at close to full load. It shall be performed in accordance with EPA test requirements, and the measured emissions shall be within EPA limits.

Normal power shall be shut off to each automatic transfer switch, one at a time. Each time the engine-generator shall start and the automatic transfer switches shall function according to the design intent.

Normal power shall be returned to the automatic transfer switches. The automatic transfer switches shall return to normal power and the engine-generator shall shut down according to the design intent.

Normal power shall be shut off to the entire building. The engine-generator shall start and the automatic transfer switches shall function according to the design intent. Normal power shall be returned. The automatic transfer switches shall return to normal power and the engine-generator shall shut down according to the design intent.

The generator shall be tested for voltage and frequency stability. The automatic transfer switches shall be used to apply load to the generator according to the worst case step loading sequence defined in the generator specification. The generator voltage and frequency shall remain within the values listed in the generator specification.

The ATS maintenance bypass switches shall be inspected for proper labeling and tested for proper operation in all modes.

The generator and automatic transfer switch controls, gauges, status indicators, and alarms, including remote annunciators and devices in the Fire Command Center, shall be tested for proper operation.

Alarm outputs to the fire alarm and BAS systems shall be verified.

Transformers, Reactors, Switchboards, Panelboards, and Motor Control Equipment

A continuity check and a 1,000 volt DC megger test shall be performed on distribution and isolation transformers, and on line reactors.

A 1,000 volt DC megger test shall be performed on buses, motor starters, circuit breakers, and disconnect switches. This test may be combined with the power cable megger test by testing the devices and terminated cables together.

A continuity check shall be performed on motor control circuits and control panel internal wiring.

An operational test shall be performed on the motor controls.

Motor heater sizes shall be checked for proper size.

Motors

A 1,000 volt megger test shall be performed on 460 volt motors. A 500 volt megger test shall be performed on 200 volt and 120 volt motors.

Motors shall be “bumped” to verify proper direction of rotation.

Motors shall be run to verify proper ampere draw and to verify vibration and heating are within required limits.

The Electrical Contractor shall assist the Temperature Control Contractor and the Mechanical Contractor and insure proper operation of safeties, interlocks and motor controls.

Capacitors

Capacitors shall be inspected for proper fuses before testing. A 1,000 volt DC megger test shall be performed on 460 volt capacitors, and a 500 volt megger test shall be performed on 200/240 volt capacitors. After each megger test, proper discharge shall be checked.

Grounding

The resistance to ground of each ground rod in a ground mat shall be measured before connection to the other ground rods. The resistance shall not exceed 10 ohms. If the reading exceeds 10 ohms, add one extension and drive it another 10 feet. Further testing of that rod is not needed.

The resistance to ground of the total ground system shall be measured with all connections completed. The resistance shall not exceed 2 ohms for switching stations or utility (DTE) feed point services; and shall not exceed 5 ohms for building service substations.

Ground rods for manholes and light poles need not be tested.

A continuity check shall be performed from equipment ground bus bars and ground lugs to the ground system.

Lighting Fixtures

Lighting fixtures shall be checked for proper assembly, proper louvers or lenses, proper lamps, proper ballasts, straight row alignment, proper aiming, and the absence of light leaks.

Battery-backed emergency lighting fixtures shall be checked for continuous operation for a minimum of 90 minutes.

Lighting Circuits

Lighting circuits shall be checked for proper switching, for proper circuiting according to the design documents, and for circuiting that matches the lighting panel schedules.

Lighting Controls and Dimming Systems

Lighting controls and dimming systems shall be tested to verify that they have the specified features and programmability, and that all controls are properly labeled.

Lighting controls and dimming systems shall be tested to verify that the control sequences noted in the contract documents and manufacturer's instructions are present and operable, that control and dimming are smooth and free of flicker, and that fading is properly timed.

Lighting controls and dimming systems shall be tested to verify that the emergency lights function upon a loss of normal power.

Fire Alarm Systems

Fire alarm systems shall be tested in accordance with NFPA 72.

Controls that interface with the fire alarm system shall be tested in cooperation with the Temperature Controls Contractor to insure proper operation of interfaced mechanical devices.

Alarm, supervisory, and trouble outputs to the MOSCAD and BAS systems shall be tested to insure that the signals are received by Public Safety or at Plant Operations.

Special Systems

Security systems, card access control systems, sound reinforcement systems, and other special systems shall be tested in accordance with test plans submitted by their manufacturers and approved by the Owner. These test plans shall verify compliance with specifications and proper operation including all inputs, outputs, alarms, and accessories under all modes of operation.

Heat Tracing Cables and Mats

A continuity check, a 500 volt DC megger test, and an operational test shall be performed on heat tracing circuits prior to insulation of the pipe or tank. Verify proper current draw and heating of the heat tracing.

The 500 volt DC megger test shall be repeated after the insulation is completely installed.

An operational test shall be performed on the controls and alarms.

Lighting Dimming Controls

A. Dimmer and other Light Control Systems

1. The systems shall be placed, labeled, and configured to be 'user friendly and intuitive.
2. Dimming systems shall not be 'shared' among multiple rooms, unless those rooms are separated by a movable partition.
3. When the room size is above 400 square feet, the dimming system shall have its own 'software' to schedule the lighting, or otherwise save lighting energy when the space is un-occupied. Alternately, it may be connected into the building lighting control system when one is available
4. Whenever possible, install new systems to be similar in operation and function to other systems already in the building for easier understanding and operation on 'users'.
5. In rooms with an installed A/V system, the dimming controls shall be coordinated with and integrated into the user control panel (screen) of that A/V system so all controls can be centralized for the instructor (user of the space).

B. Lighting control systems

1. Lighting control systems installed to only save energy (scheduling, and/or otherwise saving lighting energy), may serve multiple rooms.
2. All rooms larger than 400 square feet shall be connected to the lighting control system of the building, and/or have its individual controls.
3. Lighting control systems shall be integrated into the overall building control system, and the installed dimming systems
4. In rooms with more than one door, provide a full set of controls at the most frequently used door. At the remaining doors provide controls for at least portion of the lights.
5. When an energy analysis determines that room ventilation can be reduced when the room is unoccupied or fume hood flow can be reduced when nobody is standing at the hood, connect one dry contact of the occupancy sensor to the lighting system and provide a second dry contact for use by the building DDC system.

C. Owner Training

Specify that the installing contractor train the occupants of the space on how to operate the system, and that University Maintenance and Operations be instructed in the proper setting, adjusting, and maintaing the equipment

DESIGN GUIDELINE 261000
MEDIUM VOLTAGE ELECTRICAL DISTRIBUTION

Scope

This guideline defines the requirements and standards for design of expansions and modifications to the University medium voltage electrical distribution system. The guideline covers basic requirements for system design, services, load estimating, cables and raceways, unit substation configurations and testing.

Related Sections

U-M Design Guideline Sections:
5.7 SBA - Unit Substation Rooms
6.3 DG 260513 - Medium, Low and Control Voltage Cables
6.3 DG 260526 - Grounding and Bonding for Electrical
6.3 DG 260533 - Electrical Materials and Methods
6.3 DG 260543 - Underground Services for Electrical Systems
6.3 DG 260800 - Electrical Acceptance Tests
6.3 DG 261100 - Unit Substations

U-M Master Specification Sections:
7.3 MS 260513 - Medium, Low and Control Voltage Cables
7.3 MS 261100 - Unit Substations

U-M Standard Details:
26000000 – Series Details

Reference Documents:
- American National Standards Institute (ANSI)
- Institute of Electrical and Electronic Engineers (IEEE)
- National Electrical Manufacturers Association (NEMA)
- NFPA 20, "Standard for the Installation of Stationary Pumps for Fire Protection"

Design Requirements

Use U-M Master Specification 260513, “Medium, Low and Control Voltage Cables” as basis for design and specifying medium voltage power distribution cables. Use U-M Master Specification 261100, “Unit Substations’ as basis for design and specifying medium voltage switches and unit substations. Edit the specification and details to make them project specific. When editing the specification, turn on hidden text and follow the Spec Editor notes.

Proposed designs associated with the University medium voltage distribution system shall be coordinated with Utilities Plant Engineering (UPE). Contact UPE through the University Design Manager.

University Medium Voltage Distribution Systems

The University medium voltage distribution systems serve three major campuses, Central Campus, North Campus and University of Michigan Hospitals and Health Centers (UMHHC).

The Central Campus primary distribution systems consist of a 13.2 kV looped system and a 2.4 kV radial system. The 2.4 kV system is slowly being eliminated and upgraded for incorporation into the 13.2 kV distribution system. The 13.2kV distribution system is comprised of numerous loop style feeders served from U-M Switching Stations. The loop feeders serve multiple buildings each with one or more unit substations.

The North Campus primary distribution systems consist of a 4.8 kV looped system and a 13.2 kV looped system. The 4.8 kV system will eventually be upgraded to a 13.2 kV system. The distribution systems are comprised of numerous loop style feeders served from U-M Switching Stations. The loop feeders serve multiple buildings each with one or more unit substations.

The UMHHC primary distribution system, in general, consists of a 13.8-kV dual radial system served from a single U-M Switching Station. Additional UMHHC buildings are fed from a 13.2-kV looped system, as noted above, served from a single U-M Switching Station. Each building fed from the 13.2kV looped system is served by a dedicated loop to provide dual primary sources as required for inpatient faculties. Additional information on the primary distribution systems and on the primary system fault capability is available from UPE.

Electrical Service Requirements

Coordinate with UPE on the design of electrical services for new buildings or accommodations required for increased loads on existing building electrical services.

Coordinate with the Design Manager and UPE Primary System Engineer on the design of power source(s) for an electrically driven fire pump. Request data from the UPE Primary System Engineer to verify compliance with NFPA 20 requirements for 'reliable power'.

New buildings located within the coverage area of the University medium voltage distribution systems shall be served by the 13.2kV system and designed to comply with the standards and requirements noted in this guideline. Coordinate with UPE for incorporation of new building electrical services into existing distribution systems. Avoid adding new loads to the 2.4kV or 4.8kV systems.

The transformer secondary main breaker of unit substations shall be regarded as the building's service disconnect and shall be suitable for use as service entrance equipment.

New 'off site' buildings, (buildings located outside of the coverage area of the University medium voltage distribution systems), shall be served by the local electrical utility and designed to comply with their standards and requirements. The design for off-site buildings may require space for two future 15kV loop switches and one 15kV fused transformer feeder switch, verify with UPE. Transformers and secondary switchgear shall comply with U-M design guidelines and specifications.

Load Estimate Requirements

During the Schematic Design Phase, estimate the additional kW demand load associated with proposed project scope. 'Square foot' load estimates based on building types are acceptable at this stage of design. Design Development Phase deliverables shall include a kW demand estimate based on load lists. Drawings submitted for Owner review during the Construction Document Phase shall include finalized kW demand load calculations.

For large chillers (750 Tons and above) perform an economic evaluation for serving the chiller(s) at 4160V or 4800V verses at 480V. The evaluation shall include cost savings that may be obtained by incorporation of a VFD at 480V. Perform this evaluation during the schematic design phase.

Phasing

In general, phase rotation shall be A-B-C. The phasing of new installations shall be A-B-C (X-Y-Z) from left to right, top to bottom and front to back, when viewed from the front. Match the phasing of renovations to the existing installations.

Medium Voltage Cable and Raceway Requirements

University medium voltage distribution cables are primarily routed underground.

Design raceway systems in such a way that cable pulls do not exceed 500 feet. Provide calculations showing that the required cable pulls do not exceed the manufacturers' recommendations for pulling tensions, sidewall pressures, and cable-bending radius.

For buildings served from the University medium voltage distribution system, the UPE High Voltage Shop will furnish and install the medium voltage cables, splices and terminations. Medium voltage cabling will be installed and terminated to each loop switch. The contractor shall be responsible to furnish and install all manholes, raceways, cable trays and supports. Coordinate installation through UPE. Medium voltage feeder cables for chillers shall be furnished and installed by the contractor.

Unit Substations

Unit substations, fed from looped style distribution systems, shall consist of two 15kV non-fused sectionalizing loop switches, one 15kV fused transformer disconnect switch, transformer with 480V or 208V secondary, and secondary switchgear with main circuit breaker.

Unit substations, fed from radial style distribution systems, shall consist of one 15kV fused transformer disconnect switch, transformer with 480V or 208V secondary and secondary switchgear with main circuit breaker.

Distribution systems designed to serve laboratory research or inpatient facilities shall include double ended unit substations. Distribution systems for all other facilities shall include single ended unit substations unless otherwise required for reliability or limiting shutdowns for maintenance.

Testing

Instruct the Contractor to perform testing in accordance with Design Guideline 260800 and to provide the University Project Manager and UPE Primary System Engineer with test reports. Testing associated with medium voltage distribution systems shall be coordinated and performed in conjunction with UPE.

ELECTRICAL POWER SYSTEMS

Scope

The various Codes applicable to the University's electrical power system are mainly based upon a model of a single utility service, connected to a single premise. The University's electrical system, however, consists of multiple utility services, a cogeneration facility, and a comprehensive primary distribution network connected to hundreds of premises. Thus applying the codes to the University's electrical system is not straightforward as it would be in other locations.

To meet the level of safety intended by the Codes, the design the University's electrical distribution systems is as described herein.

Electrical System Description

Utility Services

The Detroit Edison Company DTE provides the following primary and secondary services to the University:

1. Three 13.2 kV primary services, from DTE's University Substation, to the Central Power Plant (CPP) on Central Campus.
2. Two 13.8 kV primary services, from DTE's Academy Substation, to the University of Michigan Hospitals (UMH) main distribution substation in University Hospital. (A possible conversion to 13.2 kV is being investigated.)
3. Two 13.2 kV and two 4.8 kV primary services, from DTE's Campus Substation, to the North Campus Switching Station.
4. Eleven 13.2 kV and 4.8 kV primary services to individual buildings having service patterns where the primary demand rate is cost effective.
5. Over 250 secondary services of various voltages to individual buildings.

Cogeneration Facility

The University produces steam, and generates electricity, at the Central Power Plant, a cogeneration facility that contains the following:

1. Three steam turbine-driven 13.2 kV generators with a total capacity of 37.5 megawatts.
2. Two gas turbine-driven 13.2 kV generators with a total capacity of 7 megawatts.

Primary Distribution Network

The University distributes power to most of the buildings connected to its medium voltage distribution system through the following types of circuits and service points:

1. 13.2 kV and 2.4 kV primary feeders from the Central Power Plant to most buildings on the Central Campus and Athletic Campus.
2. 13.8 kV primary feeders from the University Hospital's Substation to most of the UMH buildings on the Medical Campus. (A possible conversion to 13.2 kV is being investigated.)
3. One 13.2kV emergency feeder from the Central Power Plant, through a 13.2-13.8-kV autotransformer, to select UMH loads. (May be eliminated if 13.8 to 13.2 conversion is warranted.)
4. 13.2 kV and 4.8 kV primary feeders from the North Campus Switching Station to most North Campus buildings.

Application of the Codes

General

1. New electrical systems shall comply with the NEC and other noted codes on the U of M web page.
2. Existing electrical systems under addition or renovation shall be upgraded to comply with the current codes.
3. Existing electrical systems serving an area, undergoing non-electrical renovation, in general, are not required to be upgraded to comply with the current codes. However:
   a. No work of any discipline shall degrade the existing electrical distribution system in any way.
   b. Upgrade the electrical distribution systems wherever possible and practical.
4. The University's electrical system is considered "reliable" as defined in NFPA 20 Appendix A.
5. As described in NEC Section 695-3(2), the Central Power Plant could be considered an "on-site power production facility" The University, however, prefers an on-site, natural-gas-fired generator to supply the emergency power loads in a facility.

Application of NFPA 70, the National Electrical Code

1. The service points at which the Detroit Edison utility services end and the University premises wiring begin, are defined as the connections of the secondary buses or terminals at the Detroit Edison owned step-down transformers, fused cut-out switches, or service drop conductors, to the University owned cables.
2. The "source ends" (Central Power Plant or switching station ends) of the University's primary distribution cables are feeders and shall comply with NEC Article 220, "Feeders".
3. The "load ends" (building ends) of the University primary distribution cables, however, shall be treated as the utility services to the building. Install service disconnecting means and comply with all of the requirements of NEC Article 230, "Services".

4. In a like manner, a secondary-voltage feeder (or feeders) from one building to another building shall be treated as the utility's service to the building. Install service disconnecting means and comply with all of the requirements of NEC Article 230, “Services”.
5. This service entrance shall fully comply with NEC Article 230, and all other applicable sections. These requirements include, but are not limited to the following:
    a. Conductors shall be maintained outside of the building or shall be enclosed in two inches of concrete until they enter the room containing the building service disconnecting means.
    b. Primary disconnect switches, unit substation transformers and pad-mount transformers shall be treated as utility owned equipment.
        - Access shall be restricted to qualified personnel only.
        - The transformer primary switches shall not be used as the building service disconnecting means.
    c. The line side terminals of the secondary main disconnecting device(s) shall be treated as the building service point.

Application of the National Electrical Safety Code

In addition to complying with the NEC, the Central Power Plant, switching stations, substation rooms, manholes and other areas containing primary equipment, main service switchgear, or cables shall comply with the National Electrical Safety Code.

Application of the International Building Code

1. In low-rise buildings, provide emergency power for egress lighting, emergency signs, and the fire alarm system.
    a. Provide a natural gas fueled engine-generator set whenever possible because the savings in maintenance costs will offset the higher initial cost. Connect the generator using one or more automatic transfer switches. These transfer switches shall be 'close-transition', soft-start, with full, isolated maintenance bypass systems included
    b. As an alternative to an engine-generator set, consider providing a fuel cell system.
    c. Provide a central battery/inverter system with the battery system being of the flooded-wet-cell, Plante-lead-alimony, type. Provide sufficient 'installation and working' clearances around the overall system, and installed needed ventilation. (Sealed valve regulated battery systems shall be used due to their high maintenance replacement costs.)
    d. When an engine-generator set cannot be provided, provide individual battery packs.
    e. Because the normal power source is sufficiently reliable, do not connect low-rise building fire pumps, elevators, or similar equipment to the engine-generator set.
2. In high rise buildings; provide emergency power for egress lighting, emergency signs, and the fire alarm system. Provide standby power for fire pumps, elevator(s), smoke exhaust systems, stairwell pressurization systems, and other standby systems as required by codes.

a. Provide a single natural gas fueled engine-generator set with one or multiple automatic transfer switches. These transfer switches shall be 'close-transition', soft-start, with full, isolated maintenance bypass systems included

   - Provide the fire pump automatic transfer switch as an integral part of the fire pump controller.
   - Provide the elevator system automatic transfer switches as part of the building's power distribution system, not integral to the elevator controllers.

b. Consider supplying more than one building from a single engine-generator set.

c. Consider installing the engine-generator set in an adjacent parking structure or lot to minimize noise and vibration.

3. Only as a temporary measure when an engine-generator set cannot be provided at the time of initial construction, provide two separate services to the building and provide multiple transfer switches.

   a. Obtain one service from the University electrical system and the other from Detroit Edison.

   b. Do not obtain both services from the University electrical system because both services will be connected together at times for system maintenance or load balance.

   c. Do not obtain either service from a 4.8kV or 2.4kV primary circuit because these circuits are being phased out.

   d. Do not obtain both services from Detroit Edison unless they originate at different Detroit Edison switching stations.

   e. The University's long-range goal is to provide emergency and standby power to every high-rise building from engine-generator sets. Design the electrical distribution system so that an engine-generator set can be connected in the future.

4. In low rise and high rise buildings with special needs, special power may be required by codes or may be requested by the Owner for hazardous labs, animal rooms, freezer farms, radio transmitters, telecom switching stations or other critical loads.

   a. When possible, provide the special power from the same natural gas fueled engine-generator set that supplies the emergency and standby power. Use a separate automatic transfer switch to feed the special loads.

   b. If no engine-generator set exists and special power is required within minutes of a loss of normal power, provide a dedicated natural gas fueled engine-generator set.

   c. If no engine-generator set exists and special power is required within a few hours of a loss of normal power, provide a University standard generator connection box for connecting a portable generator.

Electrical System Requirements

Distribution Network

The University's long-range goal is to convert the entire primary distribution network to 13.2kV.

1. Connect new unit substations to 13.2kV primary circuits, not to 4.8kV or 2.4kV circuits.

2. Coordinate with the Utilities and Plant Engineering Department to establish the specific circuits and connection points.

Unit Substations

Provide indoor unit substations consisting of primary load break switches, dry type transformers, and secondary switchgear distribution sections.

1. Provide double-ended substations with two main and one tie secondary circuit breakers Double-ended substations are typically only used for health care, and research buildings.

2. Provide single-ended substations with main secondary circuit breaker Single-ended substations are used for classroom, library, housing facility, and similar buildings. With single-ended substations provide a generator connection box on an exterior portion of building accessible to trucks. Also provide raceway and conductors from the generator connection box, to a separate circuit breaker in the substation dedicated for this generator connection.

3. Substations with a secondary voltage rating of 480/277-volts, three phase, 4-wire, are preferred.

4. Size substations only for the anticipated peak load plus spare capacity for future growth. Do not oversize the substations and thus increase initial costs and transformer losses.

DESIGN GUIDELINE 261100
UNIT SUBSTATIONS

Scope

This guideline defines the requirements and standards for design of unit substations. The guideline covers basic requirements for design, system ratings, designated spaces, primary switches, transformers, secondary switchgear and testing. Unit substation assemblies shall be configured as single-ended or double-ended and consisting of primary sections, transformer sections, and secondary voltage distribution sections.

Related Sections

U-M Design Guideline Sections:
5.7 DG - Unit Substation Rooms
6.3 DG 260513 - Medium, Low and Control Voltage Cables
6.3 DG 260526 - Grounding and Bonding for Electrical
6.3 DG 260533 - Electrical Materials and Methods
6.3 DG 260800 - Electrical Acceptance Tests
6.3 DG 261000 - Medium Voltage Electrical Distribution

U-M Master Specification Sections:
7.3 MS 261100 – Unit Substations
7.3 MS 261102 – Installation of Pre-Purchased Unit Substations

U-M Standard Details:
26000000 – Series Details

Reference Documents:

- MV Load Interrupter Switchgear: ANSI C37.20.3, ANSI C37.20.4, ANSI C37.22, ANSI C37.57, ANSI C37.58, NEMA SG-5 and NEMA SG-6.
- Secondary Substation Transformers: 10 CFR Part 431, ANSI C57, IEEE 100, NEMA 201 and 210, and UL 1562.
- LV Metal-Enclosed Switchgear Assemblies: ANSI-C37.20, NEMA SG-5, and UL 1558.
- Low-Voltage Power Circuit Breakers: ANSI-C37.13, NEMA SG-3.
- Circuit Breaker Trip Devices: ANSI-C37.17.
- Michigan Electrical Code (MEC).

Design Requirements

Use U-M Master Specification 261100, “Unit Substations”, as basis for design and specifying unit substations. For the required configuration of University substations see Standard Electrical Detail 26110001 for single-ended substations and Standard Electrical Detail 26110002 for double-ended substations. Edit the specification and details to make them project specific. When editing the specification, turn on hidden text and follow the Spec Editor notes.

Rating Requirements

Unit substations shall be 500 kVA minimum and 2000 kVA maximum unless approved otherwise by the University.

System fault contribution of 750 mVA with an X/R ratio of 15 shall be used when determining the required interrupting rating for unit substation equipment.

Provide a short circuit, protective device coordination and arc flash hazard study per DG 260500, "Common Work Results for Electrical".

Base calculations to determine the degree of arc flash hazard on actual field installation data and coordinate with Utilities Plant Engineering (UPE). Design distribution systems to limit the arc flash incident energy to a magnitude requiring PPE of Level 4 or below.

Size single ended unit substations so that the transformer's AA rating equals roughly 150 percent of the projected peak demand. Size double ended unit substations so that each transformer's AA rating equals roughly 115 percent of the projected peak demand for the entire double ended unit substation.

Loop style feeders of the University medium voltage distribution system are considered service entrance conductors. The transformer secondary main breaker of unit substations shall be regarded as the service disconnect and shall be suitable for use as service entrance equipment.

Space Requirements

See DG 5.7 for associated architectural, mechanical and electrical space requirements.

The substation shall be a front-aligned structure. Any variations in section depth shall be reflected on the rear side of the substation. Label front of substations on plan view drawings.

Provide working clearances as required by MEC and indicate them on plan view drawings. Provide required dedicated work space above the unit substation and delineate them on drawings with an elevation view. Space and room requirements for unit substations shall be determined and accounted for during the Schematic Design Phase.

Provide rear access to all unit substations. Working space for rear access shall be based upon clearances required for working on energized parts at the system voltage.

Incoming Line Section Requirements

Provide 15kV incoming line sections with two loop switches for the two incoming lines, and a fused load interrupter transformer primary switch.

The transformer primary switch shall be key-interlocked with its associated secondary main breaker so that the secondary main breaker closes after and must be opened before the transformer primary switch.

UPE Primary System Engineer and Project Engineer-of-Record shall specify the required "E" rating of the fuses after review of the TCC curves submitted with the shop drawings.

Transformer Requirements

Provide only dry type transformers, unless an alternate for a given project is specifically approved by the University.

Unit substation transformer coils shall be copper.

Transformers shall have five full capacity, 2.5 percent taps on the primary winding, two below and two above the nominal voltage.

Transformers shall be equipped with forced air cooling fans and controls. The transformers FA ratings shall equal 133 percent of their AA ratings.

Transformers shall be equipped with temperature monitoring systems that start the fans on high AA temperature, alarms on high FA temperature and initiates a second alarm and closes a breaker 'trip' contact on high-high FA temperature.

The temperature monitor shall include LED's indicating "power on" and "fans running".

The temperature monitor shall include an RS485 data port for future connection to a remote monitor.

Secondary Switchgear Section Requirements

Provide secondary main breakers in all unit substations.

Bonding of the transformer secondary neutral conductor to the grounding electrode shall be performed within the secondary switchgear enclosure.

Secondary mains and tie breakers shall be electrically operated (electrically charged). Each electrically operated breaker shall be powered by a dedicated, charging motor.

Feeder breakers shall be manually 'charged' unless noted otherwise. Frame sizes of feeder breakers shall be 800-ampere minimum.

Tie breakers shall be identical to the main breakers and shall be capable of being exchanged with either main breaker.

For double-ended substations, provide main and tie circuit breaker controls with auto-manual selector switch to automatically or manually transfer one or both secondary main buses to the opposite power source. When transferring or retransferring an energized bus to the opposite power source, the transfer shall be closed-transition.

Vertical bus ratings for feeder breaker sections shall be based on breaker cell frame size ratings including spares and spaces.

Blank compartments are not permitted. Spaces shall be fully bused, fitted with neutral current sensors rated to match the breaker frame sizes, and ready to accept future circuit breakers.

An Ethernet connection shall be provided for each revenue meter and a secondary Ethernet connection shall be provided to monitor circuit breakers (a single point of connection shall be provided for monitoring circuit breakers). Connections and wiring shall be shown on drawings.

Utilities Plant Engineering (UPE) may opt to extend UPE's Distribution Management System from the watt-hour meter by connecting some or all of the points listed below:

- Open-Close status contacts of loop switches and transformer primary fused switch.
- Alarm contacts on transformer temperature monitoring system.
- Status contacts of main and tie circuit breakers in unit substations.

A single point of connection to the Building Automation System shall be provided for the transformer temperature monitoring system. Connections and wiring to a DDC panel shall be shown on drawings.

Secondary main, tie, and feeder breakers shall be as noted below:

- Individually mounted, draw out, metal-clad, stored energy type, quick-make and quick-break air circuit breakers.
- Breakers shall be rated for 100 percent continuous duty, with frame, sensor and rating plug ratings shown on the drawings. Sensor and rating plug ratings shall match the breaker frame size.
- Breakers shall be capable of being manually racked into three positions; "connected", "test" and "disconnected". The breaker frames shall be grounded in all positions.
- The compartment front doors shall be closable in all breaker positions and shall permit breaker operation with door open or closed. The doors shall be capable of being opened without tripping breakers in the "connected" position.
- Each breaker shall be equipped with three-phase current sensors and a microprocessor-based RMS sensing trip unit.
- A Kirk Key interlock shall be provided to prevent the operation of the fused primary switch unless the main breaker is open. Kirk Key interlock shall also be provided on double ended substations (if designed without automatic transfer controls) to prevent the operation of the tie breaker unless one of the mains is open.

Breaker RMS sensing trip units shall be as noted below:

- Solid-state trip units shall be true RMS sensing. The trip units shall be magnitude and time adjustable, and shall include a local indication of the cause of a trip. The trip unit settings shall be indicated on the drawings.
- The trip units shall coordinate with the primary fuses, main breaker and largest downstream feeder breakers.
- The trip units shall allow adjustment without breaker trips and routine testing without removing the breakers from service.
- Trip units shall be provided with long time, short time, instantaneous and ground fault functions as a minimum. Instantaneous trip function on main and tie breakers shall be defeatable.
- The main and tie breaker trip units shall include technology to reduce arc flash incident energy during maintenance activities.

- Power for ancillary functions of the solid state trip unit shall be obtained from within the circuit breaker assembly itself, or it shall be provided by a separate control power circuit connected to the secondary bus ahead of the main breaker. Solid state trip units shall have non-volatile memory to maintain all settings, trip indications and fault data during a power outage. Batteries to maintain the memory are not acceptable.
- Trip units shall be provided with integral metering functions including an integral keypad and display.
- Trip units shall be equipped to provide alarms. Alarms shall have separate adjustable pick-up and delay settings.
- Trip units shall have open protocol communication capabilities (Modbus TCP/IP).

Design the overcurrent protective system so it can be set in a 'selective' manner, to minimize the disruption from any given fault, to as small an area as possible. Prepare the settings for the overcurrent protective system to insure proper selectivity and coordination.

Require contractor to provide test reports showing that the overcurrent system has been set and tested, before the system is commissioned. All breakers (new and existing) shall be tested via primary current injection.

Adjacent to secondary main circuit breakers, in a separate cubicle, provide an analog voltmeter with selector switch, an analog ammeter with selector switch and a revenue kilowatt-hour meter. Selector switches shall have an off position.

Sub-metering components (metering of feeders) shall be located in the associated secondary switchgear section or, due to space limitations, provide separate wall mounted metering enclosures located within the substation room. Coordinate with UPE for locating sub-meters.

Testing

Instruct the Contractor to perform testing in accordance with manufacturer instructions and Design Guideline 260800, and to provide the University Project Manager and UPE Primary system Engineer with test reports.

Manufacturer's start up responsibilities shall include point-to-point testing of metering CT circuits.

LOW VOLTAGE ELECTRICAL DISTRIBUTION

Scope

New distribution systems shall be 480/277 volts AC, and/or 208/120 volts AC, three-phase, four-wire (w/ground), unless otherwise directed by University Design Manager (UDM).

The A/E shall perform a fault and coordination study to the depth needed to insure that the specified devices will properly and safely interrupt faults and overloads, and that the system can be coordinated properly.

All breakers, fuses and electrical distribution equipment shall have interrupting ratings of at least 1.2 times the available fault current as determined by a fault current analysis performed by an engineer.

All relays, breakers, fuses, and other overcurrent protective devices shall be coordinated in order to protect electrical equipment from damage and to isolate the fault to the smallest possible portion of the distribution system..

All fault current and coordination studies (not performed by the A/E) shall be approved by the A/E before equipment energization. The approved fault current and coordination studies shall be provided to the University Project Manager (UPM) before commissioning of the distribution system can proceed.

Switchboard and Panelboard Requirements

All switchboards and panelboard breakers shall have the appropriate short circuit interrupting rating as determined by the fault current analysis. All switchboards and panelboards shall be of the safety dead front type and ruggedly constructed of sheet steel. All switchboard and panelboard doors shall have latches in addition to locks and shall be master keyed alike. All switchboards and panelboards shall have an identity designation and shall include its source identification and location. All loads shall be identified by number and load (where applicable) and a typewritten load schedule shall be protected by clear plastic and placed in a frame mounted to the inside of the door.

All breakers requiring settings such as long time pick-up, instantaneous pick up, etc. shall be set according to a coordination study performed by an engineer. The coordination study shall be submitted and approved by the project A/E before any equipment energization. The approved settings shall be placed on the breakers and records of the approved settings and coordination study shall be provided to the UPM before job closeout/ commissioning.

At job closeout, all switchboards, and panelboards, shall have a minimum of 25 percent spare capacity - split equally between breakers spares and breaker spaces.

All current carrying parts shall be 98 percent conductivity copper and the phase buses shall be 100% rated throughout. Where a neutral bus is required (4-wire systems), it shall be 100% rated and isolated (unless it is required by the NEC to be bonded to ground, such as in the case of service equipment). The equipment ground bus shall be rated at a minimum of 50% of the phase bus capacity. Both the neutral and ground buses shall have sufficient terminals to accommodate the number of poles or devices that can be installed.

The main and feeder protective devices shall typically be bolted to the bus. Square-D, I-Line panels are an exception.

Indoor panelboards, switchboards, and safety switches, are to be NEMA 1. In areas where water spray or high humidity will be present (like a room needing occasional wash downs) use NEMA 4. Typical outdoor applications shall be NEMA 3R. In cooling towers, parking structures, or areas where water spray and/or high humidity will be present, use stainless steel NEMA 4. For other special locations, provide equipment that has NEMA type enclosures as required by the NEC.

Panelboards

Panelboards with mains (circuit breaker or fused switch) shall have these devices installed at the top or bottom of the bus. They shall not be mounted on the side like a feeder device.

In cases where significant neutral currents may be present due to non-linear loads, the panelboard shall be provided with a 200% rated neutral bus bar; the panelboard feeder neutral shall be sized at 200% and the source transformer shall be rated appropriately to serve non-linear loads (high harmonics) with a minimum K-rating of 4

For special systems, provide bus bars meeting those special system requirements.

Panelboards shall have wire gutters sized to accommodate the bending radius of all wires when fully equipped and shall not be less than 4 inches wide.

In general, panelboards in finished areas shall be flush mounted. Panelboards in electrical, mechanical and other service rooms and spaces may be surface mounted.

"Loadcenter" type panelboards are not acceptable unless specifically approved by the UDM for the specific and/or unusual application.

Switchboards

Wherever space permits, switchboards shall be of the fused switch type and equipped with peak current limiting fuses, (unless engineering requirements dictate other fuse types) so that fault current can be minimized. Where space is not available for the larger enclosures of fused switches, circuit breaker switchboards may be utilized.

Mount switchboards, whenever possible, in areas accessible only to qualified electricians. In those locations the switchboards do not need to have a door. In areas accessible to other than qualified electricians, provide a door.

In general, switchboards in finished areas' areas shall be flush mounted, in electrical, mechanical and other service rooms and spaces they may be surface mounted.

Safety Switches

Safety switches shall be fused or unfused as needed. Handles shall have provision for padlocking. In addition, safety switches shall include a maintenance bypass (open door while hot) provision.

Provide ground connection point in all safety switches. Provide neutral bar where circuit is 4-wire.

Safety switches on load side of Variable Speed Drives shall have auxiliary contacts to de-energize VSD before opening safety switch (Form C). Certain applications may require more that one auxiliary contact.

All safety switches shall be "Heavy Duty" rated.

Distribution Transformers

Generally, building distribution transformers shall be of the 480-208Y/120 volt type. Transformers shall be of the dry type, with a 220 degrees C insulation system, and designed for a maximum temperature rise at full load of 115 degrees C above a 40 degrees C ambient.

Provide terminals compatible with copper terminations and having holes drilled to accept NEMA 2 or 4-hole terminals as is appropriate for the size of the transformer. Provide a ground connection bar (or device) to accommodate at least 4-NEMA 2-hole terminals.

Transformers shall have a sound rating 3 dB below NEMA standard (42 dB for 10-50 kVA, 47 dB for 51-150 kVA, 52 dB for 151-300 kVA and 57 dB for 301-500 kVA rated transformers). As a first preference, transformers should have 6 adjustment taps, two 2 ½ percent above and four 2 ½ percent below nominal voltage. If this setup is not readily available, four adjustment taps, two 2-1/2 percent above and two 2-1/2 percent below nominal shall be acceptable.

Where substantial non-linear loads are to be served, the appropriate K-rated (K-4 minimum) transformer shall be used.

Provide vibration pads for the transformer supports.

Distribution System Requirements

Substation secondary distribution breaker frame size shall be 800 A. The minimum sensor rating shall be 800 A, which can be set to 50 percent to produce a minimum 400 A breaker rating. Exemptions to these ratings will be permitted for feeds to emergency systems.

The first tier of distribution panels downstream of the substation shall be of the fused switch type and equipped with peak current limiting fuses, (unless engineering requirements dictate other fuse types) so that fault current can be minimized.

Provide required working space according to the NEC article 110 for motor disconnects and all other electrical equipment.

All outdoor disconnects and associated electrical equipment for cooling towers shall be stainless steel and NEMA 4 rated.

Provide NEMA Type 6-20R 250 volt, 2 pole, 3 wire, 20 amp receptacle outlets on a 208 volt, single phase circuit where required for large freezers or other large appliances. All wiring for these receptacles shall be No. 10 AWG minimum so that the circuits can be upgraded later to 30 amps if required.

Provide 120 volt duplex receptacle outlets on both side walls of corridors and hallways at intervals not exceeding 20 feet.

Provide a 120 volt duplex receptacle outlet at each stairwell floor landing.

Provide a minimum of one 120 volt duplex receptacle outlet per each 100 square feet, or any fraction thereof, in each mechanical, electrical and janitorial closet.

Provide ground fault circuit interrupter (GFCI) protection for all 120 volt receptacle outlets located outdoors, in toilet areas and within 6 feet of water sources. No receptacles shall be rendered GFCI by being fed from the load side of a GFCI. Water coolers do not require GFCI and shall be fed from a simplex receptacle.

Installation Requirements

The Contractor shall provide at least five working days notice and shall coordinate service interruptions with the University Project Manager. The University must approve each service interruption in writing.

Before closeout/commissioning the contractor shall:

- Comply with all applicable codes and standards.
- Install all wiring in approved raceway.
- Install a separate equipment grounding conductor with the phase conductors in the raceway.
- Provide exothermic welded connections or *Burndy High Ground* compression connection between the Grounding Electrode Conductor and any Grounding Electrode.
- Install all distribution equipment at a height that will not place the top unit operating handle more than 6 feet and 6 inches above the finished floor.
- Identify all receptacles with circuit number and source panel.
- Identify all installed switchboards and separately mounted circuit breakers, panelboards, motor starters, disconnect switches, relays, and all other equipment used

for the operation and control of electrical equipment by means of engraved laminated plastic (or equivalent) plates permanently affixed to the equipment. The information provided shall contain the identification number/label of the equipment and its power source identification and location.

- Identify all panelboard circuit breakers with permanently fixed numbers and a typewritten directory identifying the breaker loads mounted in a frame affixed to the interior of the door and protected by clear plastic.
- Perform testing in accordance with Section 16950 and provide the UPM with acceptable test reports.
- Provide all engineered coordination and short circuit studies to the UPM.
- Provide all one-lines, riser and as-built drawings to the UPM.

Wiring Devices

Scope

All wiring devices shall be UL -extra-heavy duty. See Preferred Manufacturer's List for specific information on acceptable products.

Devices shall have a minimum rating of 20-amperes.

Wiring devices connected to 'normal power' shall be supplied in the manufacturer's standard color closest to 'Ivory', unless noted otherwise. If Ivory is not available, in special application devices, use the manufacturer's standard brown.

Wiring devices connected to 'emergency power' shall be supplied in the manufacturer's standard color closest to 'Red', unless noted otherwise. If red is not available in special application devices use the manufacturer's standard ivory or brown. Exception: 'Special Power' receptacles installed in the Medical School shall be gray.

When multiple circuits serve a series of receptacles the circuits shall be alternated so adjacent receptacles are not on the same circuit.

Receptacles shall be installed so the ground terminal is below, or to the left of the neutral terminal. If the building standard is other than this, follow the existing building standard

All receptacles and switches shall be labeled to note the source of power.

Receptacles within 6-feet of a water source shall be GFCI type. Receptacles dedicated to sump pumps and water fountains are excluded.

GFCI receptacles shall not be wired to protect downstream standard receptacles. Each GFCI, when it operates shall only interrupt 'its own' receptacles

Coverplates shall be 'high-quality', Type 302, stainless steel unless noted otherwise.

'Futura' class devices shall not be used, unless the needed device is only available in that style, or otherwise noted.

Lighting Controls

A. General

Toggle switches shall be rated 120/277 volts, 20-amperes, single-pole, double-pole, 3-way, or 4-way as required

Dimmer switches shall be rated 1000 watts minimum, specification grade, heavy duty, with radio noise filter - UL listed for 'heavy duty' use.

Lighting control switches, serving areas 'not visible' at the switch location shall have a pilot light function.

B. Occupancy Sensors

1. Wall mounted occupancy sensors shall be rated 600 watts minimum, 180 degrees coverage, 300 sq. ft. minimum coverage, infrared type
2. Ceiling mounted occupancy sensors shall be rated 1000 watts minimum, 180 degrees coverage, 1000 sq. ft. minimum coverage, infrared type,
3. All sensors shall have adjustable range or sensitivity, and adjustable time delay.
4. Ceiling mounted sensors (especially) shall utilize low voltage control circuits and be interlocked with the switch circuit for local auto/off control.
5. Dual technology occupancy sensors shall be used in applications where false operations must be minimized. These dual technology devices shall have a power ratings of at least 1000 watts load rating, shall cover at least 180 +/- degrees (from device), 1000 sq. ft. +/- coverage, and combination ultrasonic/infrared type. The ultrasonic component shall be of a frequency compatible with hearing aids.
6. Occupancy sensors shall be of a type that does not make any noise when the sensors switch from the on state, to the off state.
7. NOTE: Some ultrasonic occupancy sensors operate at frequencies that interfere with proper hearing aid operation. Any ultrasonic sensors shall therefore be specified to operate beyond the interference frequencies with hearing aids.

C. Light Dimming Control Systems

1. The wiring devices, as applicable for the dimming system, shall be in accordance with the above requirements.

2. Such systems shall be placed, labeled, and configured to be 'user friendly and intuitive. See Section 16550 for more information.

D. Lighting control systems

1. The wiring devices, as applicable for the lighting control system, shall be in accordance with the above requirements.

2. Such systems shall be placed, labeled, and configured to be 'user friendly and intuitive. See section 16550 for more information.

Receptacles

Duplex and single (simplex) receptacles shall be rated 125 volts, 20 amps, 2-pole, 3-wire, NEMA Type 5-20R.

GFCI duplex receptacles shall be rated 125 volts, 20 amps, 2-pole, 3-wire straight blade type with nylon or Lexan bodies. GFCI receptacles shall trip when ground currents exceed 5-mA, shall trip in 25-milliseconds maximum, and shall have an interrupting rating of 2000 amperes.

TVSS receptacles shall clamp at 330 volts or less, and shall have visual indication of the failure of their protective circuitry.

Child resistant receptacles shall require the simultaneous insertion of both line and neutral plug blades before power is applied to the receptacle contacts.

'Special receptacles' shall be of the voltage, amperage, number of poles, number of wires, configuration, and NEMA Type required by the (to be) supplied load.

Ceiling mounted and/or critical application receptacles shall be 'twist-lock' type with the NEMA configuration required for the (to be) supplied load.

'Receptacle Strips'

Commercially available surface mounted receptacle strips shall not be used unless the receptacles meet the above noted minimum requirements. Alternately, use surface raceway with receptacles separately installed. The receptacles shall be spaced as required for the application.

Power Poles

Power poles shall be painted steel unless shown otherwise, with an internal barrier to separate power wiring from telecommunications wiring. If power outlets are installed they shall meet the minimum requirements noted above. A green ground wire shall connect all receptacles. The pole shall not be used as the ground conductor.

The poles shall be firmly affixed at the top and bottom. The power and/or telecommunications wiring shall exit the poles through separate flex conduits connected to ceiling mounted junction boxes

Floor Boxes

In general, floor boxes shall be avoided. When there is no good alternative, however, the boxes shall be of the 'Flush-Poke-Thru' type, with multi-service capability, and be UL listed for 2-hour fire resistance.

Boxes shall be have a minimum capacity of 30 cubic inches, split into 2 or 3 compartments of equal capacity by removable partitions

These 'Flush Poke-Thru' type floor boxes shall meet ADA and Accessibility Guidelines and be UL listed for scrub water exclusion.

Multi-service devices shall have the necessary channels in the insert body to provide complete separation of power & communication services.

Pin And Sleeve Connectors

Pin and sleeve connectors shall comply with IEC Standard 309. They shall consist of nylon housings with integral locking rings and cord grips that are color coded by voltage. Pins and sleeves shall be sized, arranged, and keyed to prevent incorrect assembly.

Timers

A. General

1. Acceptable manufacturers are noted in the Preferred Manufacturers List.
2. All devices shall be UL listed and labeled for the application
3. Inside mounted devices shall have a NEMA 1 enclosure. Outdoor applications shall have a NEMA 3R enclosure. In either case, the cover shall be lockable.
4. Controls shall be easy to understand, and adjust.
5. Power control contacts shall be provided, capable of switching 20-ampere, 120 or 277-volt circuits. These contacts shall be capable of controlling incandescent, fluorescent, or HID lighting.

B. 24-Hour and 7- Day Timers.

1. Where BAS control panels are not available, or too expensive to upgrade, install timers.
2. Timers shall be electronic type, with battery back up and appropriate charging circuits to keep the battery charged. The battery shall supply only the internal date, and time circuitry.
3. Timers for control of indoor lighting applications shall include automatic switching to accommodate daylight savings time changes, standard holidays, and special other specific dates.
4. Timers for control of outdoor lighting applications shall include astronomical type of controls to automatically adjust on and off times to accommodate time of year.
5. Two or more power control contacts shall be provided, as noted above.
6. Provide at least one, Form C, control contact rated for 120-volts.

C. Spring Wound Timers

1. Where an application requires a timer, to allow an erratically scheduled 'On Times' of a specific length, use manually, spring wound, timers.
2. Timer shall allow 3-way switching of lights, i.e. control of tunnel lighting from either end of the tunnel segment.
3. The construction of the timer shall be appropriate for the environment where it is to be used, i.e., hot and high humidity environments in tunnels.

Installation Requirements

D. Provide No. 10 AWG wire to NEMA Type 6-20R receptacles serving freezers, window air conditioners, or other large appliances.

E. Where circuits are supplying a high portion of non-linear load, provide a separate neutral conductor for each single-phase branch circuit. The neutrals of these single-phase circuits shall not be shared or daisy-chained.

F. Provide ground fault circuit interrupter (GFCI) receptacles for new and existing 120 volt duplex receptacles located outdoors, in toilet rooms and within 6 feet of water sources including sinks, cup sinks, fume hood sinks, faucets, hose bibs and water coolers. Standard receptacles protected by an upstream GFCI receptacle or a GFCI circuit breaker is not acceptable.

G. Provide waterproof enclosures for duplex receptacles located outdoors. Enclosures shall remain watertight even while in use.

H. Provide a label on the cover plate of new, or existing, light switches and receptacles in the project area. Identify the panel and circuit number feeding the device. Embossed plastic tape labels are not acceptable.

I. Color code junction boxes and box covers of emergency circuits with red paint.

J. Mark lighting and power junction box covers in indelible ink with the panel and breaker numbers of the circuits contained within.

MOTOR CONTROLS

Scope

In general, motors larger than 1/3 horsepower shall be 460 volts or 208 volts, 3 phase. Motors 1/3 horsepower and smaller shall be 115 volts, single phase. Motors 200 horsepower and larger may be rated for medium voltage2,400-volts, 4,160-volts, or 4,800-volts.

When both 480/277-volts and 208/120-volts are available in a given building, connect and run all 3-phase motors at 480/277-volts.

Especially when only 208/120-volts is available in a building, carefully evaluate the degree and frequency of motor-starting voltage-drops, on the other systems in the building. Where the 'flicker limits' noted in utility system (DTE's) rate/rule books (or good engineering practice) would be violated, install 'soft starters', variable frequency drives, or other means for reducing the voltage-drop during motor-starts.

Provide a motor control center (MCC) to control motors clustered in a given area or zone of the building. Provide local (individual) combination motor starters to control one, or a small number, of motors in a given area or zone.

Avoid feeding 3 phase motors from lighting or receptacle panels. Use 'power panels', available in the building, whenever possible.

Design motor feeder circuits to limit the motor starting and running voltage drops to values within the requirements of the NEC.

Motors 50 HP and larger shall be provided with power factor correcting capacitors.

- If a VFD is the motor controller, evaluate whether or not a capacitor should be installed given the distorted waveforms often present with VFD's.

- If only 208/120-volts is available in the building, and all 3-phase motors are therefore 208-volt, evaluate and then address the affects of the non-linear loads connected to the system (computers, UPS systems, etc.)

A duplex work receptacle shall be in close proximity to all motors and motor controllers.

Distribution systems and motor feeders to 'duplex' systems shall be sized to operate both motors simultaneously - even if current plan is only operate one at a time.

Motor Controllers

Provide electrically operated, motor controllers to provide short circuit and motor overload protection, and motor disconnecting means, for all three-phase motors.

Single phase motors may be controlled by manual motor starters.

Starters shall be lockable in the open (preferably in open and closed) positions.

Combination motor starters, with fused switches, are preferred whenever possible (for their visible break).

Variable Frequency Drives, and Reduced Voltage Starters

When variable frequency drives (VFD) are specified (these are normally specified by mechanical engineer), the drive should be supplied with a disconnecting means. If none is supplied (specified), a separate disconnection means shall be provided - at the VFD. If VFD is not in line of sight of motor, or is not lockable in the open position, install a non-fused disconnect switch at the motor. That disconnect shall have 'pre-break' contacts. If the VFD controller needs this pre-break contact, wire this contact to the VFD. These control wires for the pre-break, may be run in the same conduit as the motor feeder.

Provide reduced voltage or soft motor starters when full voltage motor starting may affect voltage sensitive equipment on the same bus.

Disconnecting Means Needed in Line of Sight of Motor

If motor control (starter) disconnecting means is not in line of sight of motor, or is not lockable, provide a lockable, non-fused safety switch at the motor. (This requirement applies to all types of motor control equipment.)

For critical motor loads such as many fume hoods, provide motor single-phasing-protection. Single phasing protection shall be accomplished by the use of a 'single phase detector' on a fused disconnect, or by the use of a molded case circuit breaker.

Control Circuit Requirements

In general, provide 'Hand-Off-Auto' (HOA) control switches for motors 1/2 horsepower and larger (including those controlled by variable speed drives). In the "hand" position, the motor shall run independently of most automatic start/stop controls. Only the safety and modulating controls shall remain active. In the "auto" position, all start/stop controls shall be active. Wherever possible, control circuits shall be wired so that motors automatically restart after a power disruption. Provide time delays to allow large fans and pumps to coast down before restarting after a momentary power disruption, and to prevent all of the large motors from restarting simultaneously.

High temperature detectors (firestats), smoke detectors, low temperature detectors (freezestats), flow switches and all other safety controls shall be energized and operational whenever the equipment they protect is operating.

When required, provide limit switches on dampers to prevent the associated fans from starting until the dampers are fully open.

Duct smoke Detectors

Duct smoke detectors required by code.

- Duct Smoke detector shall be supplied by, installed, and wired by the fire alarm system supplier. This detector shall be compatible with that fire alarm system.

- When fire alarm system is 'intelligent', do not directly control motor from smoke detector. See detail 16720006 noted below.

- Wire those duct smoke detector to the 'Duct Smoke Detector Interface Box' as shown on details 16720008 (for buildings without fire alarm systems, 1672007 (for buildings with 'hard-wired' fire alarm systems), or 16720006 (for buildings with addressable fire alarm systems). These interface boxes allow quicker isolation of equipment failures to either the temperature control system or the fire alarm system. Interface boxes are available from Owner.

- Fire alarm contractor and temperature control contractor will wire to these interface boxes, and test them for proper operation.

- The interface box(es) should be close to the temperature control panels.

Equipment Requirements

Medium voltage motor starters shall be of the vacuum breaker type. Coordinate the selection of medium voltage motor starters with the University Utilities Department through the University Project Coordinator.

Each MCC motor starter or combination motor starter shall consist of a fused disconnect switch or molded case circuit breaker, a magnetic motor starter with 1 overload relay per phase, and a control power transformer. Fuses shall be of the dual element, time delay, rejection type. Fused disconnects are preferred since they provide a 'visible break'.

Provide drip shields for motor control equipment installed in areas with fire protection sprinkler systems.

Installation Requirements

Instruct the Contractor to perform testing in accordance with Section 16950, and to provide the University Project Coordinator with test reports.

VARIABLE FREQUENCY DRIVES

Scope

For the purposes of these guidelines, the terms variable speed drive and VSD, can, and may be used interchangeably with the terms variable frequency drives and VFD

This electrical guideline, in large part, deals with the installation of VSD. For information dealing with the drives themselves refer to the mechanical guidelines, Section 15960.

Safety disconnect switches are not required at the motor, when the line disconnect of the VSD is lockable, and within sight of the motor. When the VSD line disconnect is not lockable, or is not in line-of-sight, a separate safety disconnect shall be installed at the motor location. All safety disconnect switches shall have pre-break (auxiliary) control contacts, (even if they are not specifically required by the VSD supplier). The wires for this control contact shall be run in the same raceway as the power conductors.

All wiring and grounding shall be in accordance with the associated electrical sections dealing with these requirements.

Harmonic Distortion Considerations

Before adding a VFD, determine the total harmonics generating load on the unit substation transformer. The new harmonic generating load shall not exceed 10 percent of the transformer base rating without approval from the University Utilities Department through the University Project Coordinator. Harmonic generating loads, as defined here, include electronic ballasts, computers and their peripherals, solid state power supplies, UPS systems, VSD drives, etc.

If the total load on the transformer, after the additions of the current project, exceed 75% of its rating; and/or if the total harmonic generating load on a substation will exceeds 50%; the A/E shall prepare a study for review by the University showing that the transformer can safely carry those loads. If the study shows the transformer inadequate, the project shall either increase the transformer size, or add additional transformers. Before adding a VSD, evaluate the possible effects of the VSD on power factor correcting capacitors or harmonic sensitive equipment on the same bus. Avoid installing a VSD on the same bus with capacitors or 'sensitive' equipment. Sensitive equipment, as defined here, are loads adversely affected by harmonic voltage distortions. These include, high sensitivity laboratory equipment, patient monitoring or treatment equipment, computers, etc.

Provide calculations per IEEE Standard 519 showing the current and voltage total harmonic distortion (THD) that will be reflected into the existing University power system, for any load exceeding 10% of the rating of the transformer serving it. Contact the University Utilities Department through the University Project Coordinator for the required power system data. The VSD shall limit the THD to the values noted below when operating at any load from zero to 100 percent.

- VSD input voltage waveform: less than 3 percent THD
- VSD input current waveform: less than 100 percent THD

After startup of the VSD, the mechanical contractor shall provide, and the electrical contractor shall install, at no additional cost to the University any additional reactors or filters required to reduce the actual THD to the calculated THD.

Maintenance Bypasses

All VSD's for motors larger than 5 HP, and/or on systems serving critical loads (as defined in program statement, shall include full maintenance bypass systems. These bypasses shall be configured to allow operation of the motor; 'across the line' mode while the drive is being repaired. Also, the bypass equipment shall be electrically isolated from the VSD drive equipment so that maintenance may be safely done with the motor running 'across the line' in through the bypass.

The electrical system serving a VSD, and the mechanical system being served by the VSD, shall be sized and braced to allow that motor (and associated mechanical system) to start and operate properly and safely when in the bypass mode - across the line. Special attention needs to be given to the affects of the voltage drops during start and the ability of the upstream overcurrent devices to carry the locked rotor current during the startup.

HEATING CABLES AND MATS

Scope

Provide heating cables and mats to protect outdoor piping and tanks from damage due to cold weather. When required, provide heating cables and mats to prevent ice buildup on and damage to concrete slabs, roofs, gutters, and downspouts.

Provide self-regulating heat tracing products manufactured by Raychem Corporation, Process Division, Menlo Park, California or Thermon Corp, 100 Thermon Dr., P.O. Box 609, San Marcos, TX, 78667-0609.

Equipment Requirements

Provide Raychem model "Autosense M-Wire" or comparable Thermon model for protection of critical water lines (such as exposed chilled water pipes serving a computer room A/C unit).

Provide Raychem model "BTV" or comparable Thermon model for protection of non-critical hot and cold water lines (such as exposed chilled water lines to a local air conditioning unit serving a general occupied zone).

Provide Raychem model "XTV" or comparable Thermon model for steam service.

Provide Raychem model “ElectroMelt” or comparable Thermon model for concrete snow-melting and de-icing applications.

Provide Raychem model “IceStop” or comparable Thermon model for roof and gutter snow-melting and de-icing applications.

Get written approval from University Project Manager if the necessary product cannot be provided by Raychem or Thermon.

Sizing Requirements

Use the Raychem application software such as “TraceCalc” etc. or comparable Thermon application software to size and determine the heating cable wattage density and trace ratio (wraps per linear foot). For applications not covered by software, use the approved method as outlined in Raychem’s or Thermon’s applicable design guide publication.

Monitoring and Control Requirements

When available, the Building Automation/Direct Digital Control (BAS/DDC) System shall provide all control and monitoring functions. If BAS/DDC is not available, get direction from the University Project Manager. Contact University Project Manager to determine if heat trace system monitoring is necessary or desirable. Monitoring functions shall be accomplished

through current sensing switches (CSS) that monitor each electrical feed phase. When providing systems with an integral monitoring conductor, contact University Project Manager for monitoring conductor connections.

Installation Requirements

Heating cables and mats shall be installed according to the manufacturer's instructions. All installations shall comply with the NEC and particularly articles 426 and 427 of the 1999 and 2002 NEC, which apply to this equipment. Per article 426-28 and 427-22, the system shall be protected by a 30mA trip ground fault protection of equipment device.

The contractor shall test the heating cables and mats in accordance with this Design Guideline, DG Section 16950 and manufacturer's recommendations before energizing or installing any insulation or covering. Contractor shall provide the University Project Manager with test reports before job closeout

Insulation Resistance (Megohmmeter) Testing for Heat Trace Cables

A. Refer to manufacturer's Design, Installation, and Maintenance Guide.

B. Perform megohmmeter test at 2500v dc.

   i. Measure the resistance between the heating cable bus wires and the grounding braid.

   ii. If the heating cable is installed on a metal/conductive surface, apply megohmmeter between the grounding braid and the surface.

   iii. Apply the voltage for one full minute.

   iv. All insulation resistance values should be greater than 1000 megohms.

   v. Resistance reading should stabilize.

   vi. If any of the above conditions cannot be met contact the Project Manager.

C. Perform megohmmeter testing prior to installation and after installation of heating cables, but prior to power connections.

DESIGN GUIDELINE 263000
ENGINE-GENERATOR SYSTEM AND ROOM

Scope:

This guideline defines the requirements and standards for design of engine-generators and associated system components. The guideline covers basic requirements for design, system components, controls, natural gas fuel systems, exhaust systems, automatic transfer switches (ATSs), room construction, outdoor enclosures and installation.

Related Sections:

U-M Design Guideline Sections

5.11 DG – Fire Command Center
6.2 DG 210000 – Fire Protection
6.2 DG 230060 - Mechanical Sound and Vibration Control
6.2 DG 230900 – Mechanical Systems Controls
6.3 DG 260526 – Grounding and Bonding for Electrical
6.3 DG 260533 - Electrical Materials and Methods
6.3 DG 260800 - Electrical Acceptance Tests
6.3 DG 262000 - Low Voltage Electrical Distribution
6.3 DG 283100 - Fire Detection and Alarm

U-M Master Specification Sections

7.2MS 231123 – Natural Gas Systems
7.3MS 263000 – Engine-Generator System

U-M Standard Details

26000000 - Series Details

Reference Documents

- Environmental Protection Agency (EPA) emissions standards for stationary internal combustion engines.
- NFPA 37, "Standard for the Installation and Use of Stationary Combustion Engines and Gas Turbines"
- NFPA-110, “Standard for Emergency and Standby Power Systems”
- UL 1008, "Standard for Automatic Transfer Switches"
- UL 2200, "Standard for Stationary Engine Generator Assemblies"
- International Fuel Gas Code
- Ann Arbor City Code, Chapter 119 Noise Control

Design Requirements:

Use U-M Master Specification 263000 Engine-Generator System as basis for design and specifying Emergency Power Supply Systems (EPSS) comprised of engine-generator units (Emergency Power Supply - EPS), ATSs and associated accessories. Edit the specifications to make them project specific. When editing the specification, turn on hidden text and follow the Spec Editor notes.

Locating EPSs outdoors, on grade level in an accessible location is preferred (see UMHS Design Guideline 263000-H for healthcare related projects). Evaluate and compare locating the EPS in a room versus locating it in an outdoor enclosure.

- Consider initial cost, ease of maintenance, load bank testing, ease of major component replacement, fuel and exhaust piping routes, fuel tank placement, heat rejection, feeder cable lengths, sound, vibration, exhaust re-entrainment, etc.
- For non-Regental projects, obtain Exterior Elements Design Review Committee (EEDR) approval before locating a unit or exhaust stack outdoors where visible to the public.

Provide studies to determine how the EPS's sound, vibration and exhaust re-entrainment will impact the building and surrounding buildings. Perform these studies in the schematic design phase to avoid last minute design changes. See Design Guideline 230060 for applicable sound and vibration limits.

During the schematic design phase, contact the U-M OSEH Air Quality Specialist regarding Michigan Department of Environmental Quality regulations, EPA air permit requirements and estimated EPS kW rating. At completion of EPS submittal reviews, provide the OSEH Air Quality Specialist finalized EPS kW rating. Also notify the OSEH Air Quality Specialist when EPSs are relocated or removed from service.

System Requirements:

Provide a stationary natural gas fueled EPS with ATSs, load testing means, and associated accessories in compliance with NFPA 110, Level 1, EPSS requirements. The University considers the probability of a simultaneous failure of both the natural gas utility delivery system and power from the Ann Arbor campus outside electrical utility to be low. Provide a diesel engine-generator system only when on site fuel storage is required or the EPS performance requirements cannot be met using a natural gas fueled system. Off Campus installations will require analysis and coordination with the local authority having jurisdiction for determination if a natural gas utility delivery system will be acceptable.

Provide generator main circuit breakers located in the unit mounted generator connection panel. Provide circuit breakers for emergency power, standby power, fire pump and load bank circuits. Provide barriers between emergency, standby and load bank circuit breakers. Load bank circuit breaker shall be rated for 100 percent of EPS capacity.

When the EPSS includes multiple accessories requiring power, provide a 208Y/120 volt, three phase load center panel to feed lube oil pumps, electric fuel pumps, cooling water pumps, electric motorized dampers, exhaust fans, lights, and receptacles. Feed the panel with emergency power.

Provide emergency power to the controls associated with combustion air, ventilation air and other systems that must operate when the engine-generator is operating.

Edit the specifications to include the EPS's maximum physical size, maximum allowable sound levels (including the load bank) and maximum allowable vibration levels. Sound and vibration requirements shall be based upon sound and vibration studies.

When multiple units are operated in parallel, the units shall be the same manufacturer and model, have the same kVA ratings, the engines shall utilize the same fuel type and the generators shall be wound with a 2/3 pitch. The loads served by multiple units operated in parallel shall be divided into multiple blocks, prioritized (emergency, legally required standby, optional standby) and controlled so the highest priority blocks receive power even if one unit fails. Emergency loads shall not be shed.

EPA Certification
Engine shall be factory EPA Certified and meet the current EPA exhaust emissions standards for engine-generators operated no more than 500 hours per year and no more than 100 hours per year in a maintenance/test mode. When a factory EPA Certified engine is not available, the engine shall be EPA Compliant Capable and the supplier shall provide the first field certification of EPA emissions compliance as part of the field start-up and performance testing.

EPS Sizing
Design of EPS sets shall be based upon the unit's code defined standby rating.

Size the unit using generator sizing software from one of the specified manufacturers and submit report to Design Manager. Provide sufficient capacity to start the unit's largest block of load while all other loads are running, without exceeding the specified maximum voltage or frequency drop.

Specify minimum required starting KVA, corresponding voltage dip percentage and temperature rise of alternators.

Provide 25 percent spare capacity above the peak projected load to feed future growth.

Automatic Transfer Switches
Specify ATSs to be provided as part of the EPS package and supplied by the EPS vendor. Do not specify them separately. ATSs shall be approved by the EPS manufacturer. ATSs shall be from the same manufacturer.

Provide 3 pole ATSs rather than 4 pole except where the generator neutral is grounded, the generator feeds multiple buildings, or 4 pole ATSs are required by code.

Provide open transition ATSs to feed loads which can withstand interruptions and will restart automatically after transfer to and retransfer from the EPS. Provide closed transition ATSs to feed loads, including elevators, which cannot withstand interruptions and will not restart automatically after transfer to and retransfer from the EPS.

Verify ATSs are adequately rated for the available fault current either from the EPSS or normal power system, whichever is greater. Closed transition ATSs shall be rated for the combined fault current contributions from the EPSS and the normal power system if the two power sources are paralleled for more than 100ms.

ATSs shall include full maintenance bypass and transfer switch isolation sections.

ATSs shall include a microprocessor based control panel. One ATS shall include a programmable generator exerciser time clock.

EPS Load Banks
EPS unit load testing shall be performed using a resistive load bank.

For EPS units located in an accessible location on grade (indoor or outside), provide a means to connect a portable load bank. Load bank staging locations shall be within 80'-0 of the EPS connection point.

For EPS units not located in an accessible location, provide a permanent, 100 percent rated, resistive load bank with integral control panel. Load bank design shall include the following:

- Master load on-off switch and load on-off step switches.
- Load dump circuit and associated components to immediately disconnect the load bank if a loss of normal power occurs during a load test. Show the control wiring on the drawings.
- Digital monitoring system with memory to display and log generator volts, amps, kW and frequency.
- Indicate the direction of heat discharge on the drawings.

Controls and Monitoring
Provide an NFPA 110 compliant control panel mounted on the EPS no more than 78 inches above the finished floor to the top of the panel, including the concrete housekeeping pad and vibration isolators.

Provide a guarded, remote manual stop station in accordance with NFPA 110. Locate it on the outside of the generator room or enclosure. Label it with a laminated plastic nameplate, white letters on a red background.

Provide a remote generator annunciator panel in the fire command center. For buildings without a fire command center, provide a remote annunciator panel in a location where it will be readily visible to maintenance personnel. The remote annunciator panel shall mirror all status indicators and alarms contained on the EPS control panel. Coordinate remote annunciator panel locations with U-M Division of Public Safety & Security, Facilities Maintenance and Utilities & Plant Engineering Department (UPE).

In fire command centers provide a generator remote "Auto-Run" switch and ATS status indicators in accordance with Design Guideline DG 5.11.

In addition to connections to remote annunciator panels, connect auxiliary "generator running" and "generator trouble" output contacts to separate points in the Building Automation System (BAS) DDC panel.

Connect an "on generator power" auxiliary contact in each ATS to a single point in a DDC panel for notification if any ATS transfers to generator power. Show these DDC points on the temperature control drawings.

Do not connect any EPS or ATS output contacts to MOSCAD or to the fire alarm system.

EPS control panel contacts shall be used for control of mechanical equipment required for EPS operation. Do not use ATS auxiliary contacts to control mechanical systems because false mechanical system operation can occur during ATS testing and maintenance.

Natural Gas Fuel System
Coordinate with DTEEnergy to ascertain the range of natural gas pressure available at the outlet of the DTEEnergy regulator and development of an engineered solution. Submit a Service Request form to UPE for new NG service arrangements. Edit Specification 263000 to specify this gas pressure range and update the basis of design with this information.

Obtain the approximate dimensions of the DTEEnergy gas meter train (often 12 feet or more in length) and locate the meter train where it won't detract from the building's appearance (include meter train in any EEDR efforts). Provide protection against vehicle impact where appropriate, such as concrete-filled steel pipe bollards with yellow PVC jackets.

Provide gas piping in accordance with NFPA 37, a second gas regulator at the engine in compliance with the EPS manufacturer's recommendations, and a gas pressure gauge downstream of the second gas regulator.

A frequent cause of EPS problems is low gas pressure caused by undersized gas piping resulting in excessive pressure drop. Size the gas piping system based on maximum gas flow of the EPS and other connected loads.

Engine Exhaust System
Design the exhaust system in accordance with the results of the exhaust re-entrainment study and in accordance with EPS manufacturers' instructions.

Calculate the exhaust system's expansion and contraction with temperature, and provide supports, slides and restraints as required.

Exhaust system piping in direct contact with the earth shall be stainless steel or otherwise protected from corrosion.

Direct the exhaust upward rather than horizontal, and away from buildings, trees, plants and anything else that is combustible.

Exhaust system design shall include the following:
- Flexible section to isolate the exhaust system from engine vibration.
- Hinged 90 degree, flapper style rain cap at the top of the exhaust stack. Do not provide a stack termination that deflects exhaust horizontally, including an inverted cone style cap.
- Manual blowdown valve in a pipe tapped into the lowest point of the exhaust system, and piped down to 24" above the floor for discharge into a bucket in an accessible location.

Provide a silencer with 35 dBA minimum attenuation when the EPS is located in or near an occupied building. Provide a silencer with 25 dBA minimum attenuation when the EPS is located

remote from occupied buildings. Provide a higher attenuation silencer when required by the results of the sound study. Refer to Design Guideline 230060 for additional sound control requirements.

A natural gas unit will require a 3-way catalytic converter. A diesel unit may require a catalytic converter or at least a particulate filter. Provide access for maintenance of the catalyst or filter.

EPS Room Requirements:

Architectural

Space and room requirements for EPSs shall be determined and accounted for during the Schematic Design Phase. Locating the room above the lowest level of the building is preferred.

Separate the generator room from occupied areas or provide sound-proofing and vibration isolation so the EPS will have minimal impact on surrounding areas. Generator room designs should maintain the sound criteria of the surrounding areas.

Per NFPA 110, generator rooms shall have a minimum two hour fire rating including rated walls and doors. Extend the walls from the floor to the deck above. CMU block walls are recommended for noise mitigation and safety. Obtain permission through the Design Manager before providing stud and wallboard construction. Expanded metal mesh, woven wire mesh or chain link fence are not acceptable for EPS rooms unless used to segregate spaces within the room.

Exit doors shall swing outward from the room.

- Exit doors shall be equipped with listed fire exit devices. Door locks shall be keyed with Best "BDM" cores.
- Provide an opening large enough for the passage of the largest shipping section of the EPS. Typically, this means a minimum 8 foot tall by 7 foot wide double door with a removable mullion.
- Personnel doors should be a minimum 36 inches wide.

Provide a 4 inch minimum housekeeping pad under each piece of floor-mounted equipment.

- Pads shall be smooth and level.
- Pads shall conform to the footprint of the equipment and shall be the full width and depth of the equipment, but shall not extend beyond the equipment by more than 4 inches. Pad edges shall be chamfered.
- The EPS housekeeping pad shall be steel reinforced in accordance with the EPS manufacturer's instructions.

Provide 2 coats of water-borne epoxy paint over a compatible primer on the concrete floor. Provide paint on the walls and ceiling.

Provide a 10 pound Type ABC fire extinguisher at each exit door.

Provide an unobstructed route to the building exterior to permit replacement of the largest shipping section of the EPS. Entire equipment access pathway, including egress route exterior door, and all intervening doors shall have free and clear area that complies with

requirements for EPS room listed above. Interior intervening doors/frames and other secondary systems constructed to be easily removable are an acceptable alternative. Design the floor of the entire route for the weight of the EPS. Provide a route and means to move drums of oil and other large maintenance items to the EPS (i.e. roof mounted units).

Mechanical

Avoid installing ductwork, piping, clean-outs, and other mechanical system components in the room unless they serve the room or EPSS. When there is no alternative to installing foreign ductwork or piping in the room, they should be installed over aisle ways and not over footprint of EPSS equipment.

Provide dry horizontal sidewall fire protection sprinklers. Sidewall sprinklers shall be supplied by the building wet sprinkler system from adjacent heated spaces. See Design Guideline 210000, for additional requirements.

- Do not locate the sprinkler heads over the EPSS equipment.
- Provide wire guards on the sprinkler heads.

When the EPS room will be located on the lowest level of the building and/or below-grade evaluate the risk from flooding and the resulting associated water damage to the EPSS equipment. Based on the risk analysis, determine if a floor drain with a backwater check valve should be installed. If required the backwater check valve shall be located outside of the room.

Provide sound attenuation at intake and exhaust dampers when required by the results of the sound study.

Provide motorized dampers, fed by emergency power, for combustion and cooling air in accordance with EPS manufacturer's instructions. Provide louvers exterior to the dampers when the dampers are visible to the public. Louvers shall be sized to avoid rain and snow intrusion and so as not to reduce design air flow rates of associated duct work and dampers.

Provide ventilation to remove equipment heat (in addition to EPS unit mounted radiator fan) and maintain equipment within their ambient temperature ratings under all weather and electrical load conditions.

Provide heat to maintain room temperature above 45 degrees F when the unit isn't running.

Electrical

Unless part of the EPSS, do not locate electrical equipment in the EPS room, including lighting and receptacle panels, central UPS systems, Building Automation System DDC panels, fire alarm control panels, security panels, or MOSCAD panels.

Provide manually-switched LED lighting in front of each EPS control panel, along either side of each EPS, in front of ATSs and in front of other electrical equipment. Connect this lighting to emergency power. Provide a battery-backed lighting fixture or an emergency lighting battery pack in front of each EPS control panel, ATS and paralleling switchgear if provided.

Provide exit signs above the exit doors.

Provide two quad receptacles, each on a dedicated circuit, and connect them to emergency power. Receptacles shall be located on opposite sides of the room.

To protect EPSS equipment from water damage by activation of the fire protection sprinkler system, provide fire alarm system, multi-sensor, smoke/heat detectors to give an early warning of a possible fire. Also provide minimum of one combination audible/visual appliance. Fire alarm system devices shall be installed in accordance with Design Guideline 283100.

Indicate EPSS equipment working clearances on plan view drawings.

Provide full size copies of the building's EPSS One Line Diagrams and Riser Diagrams on the wall in front of the EPS. Drawings shall be minimum 24"x36", installed in wooden frames and protected by glass.

Outdoor Enclosure Requirements:

Provide the EPS manufacturer's standard weather-protective, non-walk-in outdoor enclosure for most projects. When recommended by the results of the sound study or when the EPS is adjacent to occupied buildings, provide an appropriately rated sound-attenuating enclosure.

- Provide a floor unless the enclosure will be fastened down to a level concrete pad. Enclosures that are open on the bottom to air or grating are not acceptable.
- Provide clearance above the radiator cap to permit viewing down into the radiator without using a mirror, and to permit adding coolant without using a pump.
- Provide access and clearance around the engine and generator for routine maintenance.

Back Feed Tap Box:

Evaluate the need for a back feed tap box for connection of a temporary portable EPS to a unit substation feeder breaker. Temporary portable EPSs are used during unit substation maintenance, generator maintenance and for support of designated loads during a prolonged power shutdown (i.e.: freezers, general building HVAC, etc.).

A generator back feed tap box may be required for buildings under the following scenarios:

- A permanently installed EPS is not required by code.
- To satisfy special program load requirements.
- For buildings with an EPS sized only for small emergency and legally required standby loads.

Design the tap box in accordance with Standard Detail 26110004. The tap box shall also include a phase rotation monitor with indicating light to signal correct phase sequence. Install phase rotation monitor label reading 'LIGHT INDICATES CORRECT PHASE ROTATION. IF NO LIGHT REVERSE ANY TWO LEADS'. Locate the tap box at the loading dock or where a portable generator can be parked adjacent to it.

Installation Requirements

The EPS, automatic transfer switches, load bank, accessories and supporting systems shall be shall be installed, adjusted and tested in accordance with Specification 263000 and the other Division 23 and 26 specifications.

LIGHTNING PROTECTION

General

Early in the design of a new building, if the building will be taller than surrounding buildings and structures, provide a Lightning Risk Analysis in accordance with Appendix L of NFPA 780. The Project Team will review the Risk Analysis and determine if a lightning protection system should be provided.

Related Sections

U-M Design Guideline Sections:
260500 – Common Work Results for Electrical
260533 –Electrical Materials and Methods
260526 – Grounding and Bonding for Electrical
260800 – Electrical Acceptance Tests

Reference Documents:
NFPA 70, "National Electrical Code"
NFPA 780, "Installation of Lightning Protection Systems"
UL 96A, "Installation Requirements for Lightning Protection Systems"

Lightning Protection System Requirements

If it is determined that a lightning protection system should be provided, provide a traditional type of system in accordance with the appropriate chapter of NFPA 780. Do not provide an early streamer emission system or a charge dissipation system.

Provide UL listed or labeled lightning protection components and cables. Provide copper or bronze components and cables. Aluminum components and cables are not acceptable.

Ground the lightning protection system using separate copper-clad ground rods in accordance with Design Guideline 16450. The building ground system rods shall not be used. Do not provide chemically enhanced ground rods or ground test wells.

Obtain an electrical inspection of the underground components before burying them.

Test the lightning protection system in accordance with Design Guideline 16950. After both the lightning protection system and the building ground system have been completed and tested, bond the two systems together. Obtain a final electrical inspection.

The lightning protection system shall be installed by an Underwriters Laboratories Master Label Installer in accordance with UL 96A. After the system is completed and tested, the Installer shall provide a UL Master Label suitable for mounting in the building's unit substation room.

DESIGN GUIDELINE 265100
INTERIOR LIGHTING

Scope

This guideline defines the requirements and standards for design of new or renovated interior lighting systems. The guideline covers system design requirements, lighting system components and lighting controls.

Related Sections

U-M Design Guideline Sections:
3.1 DG - Sustainable Design and LEED Requirements
3.2 DG - Energy and Water Conservation
5.2 DG - Animal Facilities
5.6 DG - Parking Structures
6.3 DG 260526 - Grounding and Bonding for Electrical
6.3 DG 260533 - Electrical Materials and Methods
6.3 DG 260800 - Electrical Acceptance Tests
6.3 DG 265600 - Exterior Lighting

U-M Master Specification Sections:
7.3 MS 260500 - Common Work Results for Electrical
7.3 MS 265100 - Interior Lighting

U-M Standard Details:
260000 Series - Electrical Standard Details

Reference Documents:
- ASHRAE 90.1, "Energy Standard for Buildings Except Low-Rise Residential Buildings"
- IESNA, "Lighting Handbook"
- Michigan Elevator Code
- NFPA 101 - Life Safety Code
- USGBC, LEED Reference Guide for Green Building Design and Construction

Design Requirements

Use U-M Master Specification 265100 "Interior Lighting" as basis for design and specifying interior lighting on all projects. Use the appropriate U-M 260000 Series Standard Details. Edit the specification and details to make them project specific. When editing the specification, turn on hidden text and follow the Spec Editor notes.

Design light levels in accordance with the IES Lighting Handbook. Design for the full range of occupant ages, the tasks being performed and the associated need for contrast. Show the target design footcandle (fc) levels for each space in Design Development review documents.

The project's interior lighting power allowance shall not exceed the interior lighting power allowances listed in ASHRAE 90.1. When required by Design Guideline 3.2, the project's interior lighting power allowances should contribute toward a building's total annual energy cost savings at least 30 percent below ASHRAE 90.1 baseline building. Design documents shall include a tabulation of rooms with design lighting power densities (LPD) and associated ASHRAE allowable LPD's.

Where applicable during the Schematic Design phase identify LEED credits that will be pursued associated with the design of the lighting and lighting controls for the project.

Promote the use of skylights, clerestory windows, light shelves and other architectural features to channel non-glaring natural daylight into the building and minimize the use of electrical lighting.

Promote the use of light colored finishes on ceilings, walls and floors to increase light reflectivity and reduce the need for artificial ambient light.

Minimum ambient lighting levels should be coupled with task lighting as needed. Promote the use of under-shelf and table lamp task lights on laboratory benches, office desks, study tables and other work surfaces to further reduce the need for artificial ambient light.

Provide lighting calculations on a 2 foot by 2 foot grid to show normal power lighting levels and demonstrate compliance with egress lighting requirements for emergency power lighting.

Normal Lighting:
Provide a normal lighting level (at floor level) along the means of egress (including the exit discharge) of 1 fc minimum at all times the building is occupied. Do not provide continuously illuminated "night lighting" without automatic controls.

- The exit discharge typically includes exterior landings, stairs and ramps leading to the public way.

Corridors and toilet rooms shall be designed for a lighting level of 10 fc average minimum, at floor level.

Design lighting so the ratio of light levels between adjacent spaces does not exceed 10:1.

Provide linear fluorescent and/or light emitting diode (LED) lighting for most applications. Avoid incandescent, HID and compact fluorescent lighting.

Provide vertical illumination across the full length and height of chalk and marker boards, library shelves, wall-mounted art, signage, and other vertical surfaces requiring illumination.

Consider indirect lighting to minimize glare. Avoid locating downlights above shiny floors and stairs where reflected glare may cause falls.

Locate fixtures, remote ballasts and/or remote LED drivers so they are accessible for maintenance by the use of a 10'-0 step ladder only, or provide fixtures equipped with a lowering device. Obtain Design Manager's approval before locating fixtures, remote ballasts and/or remote LED drivers where a lift or scaffolding is required for maintenance.

Locate wall fixtures sufficiently below ceilings and provide cove fixtures with adequate access openings so lamps and ballasts can be replaced without removing fixtures or cutting coves. Coves with lighting shall comply with the maintenance accessibility requirements noted above.

Locate recessed mounted fixtures so their lenses can be removed and their components can be replaced without removing adjacent architectural, mechanical or electrical equipment.

Emergency Lighting:
Provide an emergency lighting level (at floor level) along the means of egress (including the exit discharge) of 1 fc average and 0.1 fc minimum. A maximum-to-minimum illumination uniformity ratio of 40 to 1 shall not be exceeded.

Connect an appropriate number of lighting fixtures to generator-backed emergency lighting circuits whenever generator emergency power is available. If generator emergency power is not available, provide emergency lighting battery pack units.

- Do not locate emergency lighting battery pack units outdoors or in unheated spaces.
- In finished spaces, backing up normal lighting fixtures with battery pack units is preferred to providing sealed beam LED wall pack emergency lighting units.
- Emergency battery pack units shall not contain audible alarms.
- Battery-inverter systems for single room applications may be used with Design Manager's approval. Central battery-inverter systems shall not be used.

Provide sealed beam LED wall pack emergency lighting units in the following rooms even when generator-backed emergency lighting is provided:

- Unit substation and emergency generator rooms.
- Elevator machine rooms, elevator control rooms, and on Machine-Room-Less (MRL) elevator machines.
- Mechanical rooms containing boilers, chillers, fans, pumps or compressors.

Lighting in Elevator-Related Spaces:
Provide elevator space lighting in accordance with the Michigan Elevator Code. Strict compliance is mandatory to obtain an elevator permit.

- Elevator lobbies: 10 fc minimum at elevator door sills at floor level with the elevator doors closed.
- Elevator machine rooms and control rooms: 19 fc minimum at floor level everywhere.
- Spaces containing elevator machinery (MRL elevator machines, remote sheaves, etc.): 19 fc minimum on the equipment.
- Elevator pits: 10 fc minimum at floor level everywhere.
- When the elevators are capable of operating on generator standby power, connect all elevator space lighting to generator emergency power.

- When the elevators are not capable of operating on generator standby power, connect elevator space lighting to generator emergency power anyway if emergency power is available. If generator emergency power is not available, provide 1 fc average and 0.1 fc minimum of battery-backed emergency lighting in elevator spaces.
- Several U-M departments (typically - Healthcare, Housing, Engineering, Parking) require and will pay separately for vertical-mounted, metal guarded, fluorescent strip lights the full height of each elevator shaft. Coordinate with the Design Manager to determine if elevator shaft lighting is required. If required, control the shaft lighting from 3 locations including the machine or control room, the top landing and the elevator pit.

Control Systems:
Designs for control systems shall be represented on project specific drawings. Proposed locations of all system equipment, components and devices shall be shown. A submission package for lighting control systems that consist of manufacturers cut sheets alone is not acceptable. Include wiring diagrams, sequence of operation and programming instructions at Design Development phase.

Lighting System Components

Lighting Fixtures:
Lighting fixtures shall be listed and labeled by Underwriters Laboratories (UL) or other approved Nationally Recognized Testing Laboratory (NRTL). Provide fixture types known to have been used with success elsewhere. Do not specify newly developed or unproven fixtures.

Specify manufacturers listed in the Electrical Preferred Manufacturers List (PML). When necessary to meet special architectural or photometric requirements, request Design Manager approval before specifying fixtures from other manufacturers. Demonstrate to the Design Manager that the proposed fixtures are available from a local supplier known by U-M for good quality products and service. Demonstrate that replacement parts are readily available.

To obtain competitive pricing, specify a minimum of three manufacturers for each fixture type. To reduce pricing, specify fixtures from local suppliers who can package multiple fixture types. After the Design Development phase, the lighting designer shall send a copy of the lighting fixture schedule to each of the lighting representatives listed in the Electrical PML Section 265100 to request comments and recommended equivalents. The lighting designer shall evaluate the proposed recommendations to ensure design compliance and then incorporate equivalents into the lighting fixture schedule. The proposed lighting equivalents shall meet or exceed the design requirements as well as any other requirements in the U of M Design Guidelines.

Provide lighting fixtures rated for operation at 277 volts wherever possible. Fixtures rated for operation at 120 volts may be required for Housing facilities, renovation projects, track lighting and for specialty applications.

Lighting fixtures in Housing facilities shall be high abuse / impact resistant, especially in student rooms and corridors.

Specify top covers for pendant bowl and wall sconce fixtures to keep debris, dust and bugs out.

Lighting fixtures installed adjacent to, or in direct contact with, insulation shall be IC rated.

Lamps:
In general, linear fluorescent lamps shall be 4' maximum, T8, with a color temperature of 3500 degrees K, Color Rendering Index (CRI) of 85 minimum and average rated life of 24,000 hours, minimum.

High output T5 fluorescent lamps matching the T-8 lamps in color temperature and CRI may be used only when necessary to meet special fixture or photometric requirements. U-tube and normal output T5 fluorescent lamps shall not be used.

Compact fluorescent lamps shall have a color temperature of 3500 degrees K and a CRI of 80 minimum. Note: LED sources are generally preferred to compact fluorescent lamps.

LED sources shall have a color temperature of 3500 degrees K, a CRI of 80 minimum, and a lumen maintenance L70 rating of 50,000 hours minimum.

Halogen MR type lamps are prohibited. LED MR type lamps may be used.

Request Design Manager's approval before specifying lamp technologies other than those listed above. Demonstrate to the Design Manager that the proposed lamp technologies provide unique advantages to the project.

Ballasts and Drivers:
Ballasts for T8 and high output T5 fluorescent lamps shall be NEMA Premium Ballast (NPB) program compliant, electronic type, programmed start, series circuited, and rated for a minimum start temperature of 0 degrees Fahrenheit. Ballasts shall be of the single, two, three, or four-lamp type as appropriate for the switching scheme, and shall only serve one fixture.

Ballasts for compact fluorescent lamps shall be 90 percent efficient minimum, electronic type, and shall have built-in End of Life (EOL) protection.

LED drivers shall be electronic-type, labeled as compliant with radio frequency interference (RFI) requirements of FCC Title 47 Part 15, and comply with NEMA SSL 1 "Electronic Drivers for LED Devices, Arrays, or Systems". LED drivers shall have a sound rating of "A", have a minimum efficiency of 85 percent, and be rated for a THD of less than 20 percent at all input voltages.

Dimmable ballasts/drivers with 0-10V controls are preferred. When separate control wiring is required clearly show this on the plan drawings. Route it in the same conduit as the power wiring when allowed by code and the manufacturer.

Ballasts and drivers shall be rated for the extremes of ambient temperature in which they are located. Specify ballasts and drivers rated for reliable starting to minus 20 degrees F for fixtures mounted in unheated spaces. Specify high ambient temperature ballasts and drivers for fixtures mounted indoors in direct sunlight or in high ambient temperature spaces.

Exit Signs:
Provide exit signs to meet code egress requirements, in rooms where code requires two or more exit doors, and in rooms designed for 50 occupants or more. In addition, provide exit signs in unit substation rooms, engine-generator rooms and large mechanical rooms.

Exit signs shall be on at all times and shall be LED illuminated. Radioactive, self-luminous and photoluminescent exit signs of any type shall not be used.

Exit signs shall have stencil faces, red letters and red directional arrows. Provide green letters and arrows only in buildings where existing exit signs have green faces.

Provide abuse resistant exit signs in University Housing facilities and parking structures.

Lighting Control Requirements

Design lighting controls with an understanding of the user's operational requirements and functional needs for the building and the spaces within it. Requirements of the controls shall be defined at the schematic design phase of the project. Basis of Design shall be updated with this information.

Lighting controls shall be a straightforward, cost effective means of reducing energy consumption and maintenance costs. The systems shall be placed, labeled, and configured to be 'user friendly' and intuitive.

Lighting controls for all building spaces shall comply with the applicable version of ASHRAE 90.1.

Sensors and any interfaced lighting control components shall fail to the 'ON' position so that lights are not disabled by a failed occupancy sensor or ancillary interface device.

Control each room and each block of open office space separately. Lights shall not be controlled from panel circuit breakers.

Do not provide proprietary control systems that inhibit competition and are difficult to maintain by the users.

Do not provide device-addressable lighting controls or a BACNet interface between the lighting controls and the HVAC controls at this time. These technologies are not sufficiently developed yet, and their additional installation, programming and maintenance costs far exceed their energy cost savings.

Occupancy Sensors:
Specify occupancy sensors (OSs) in most rooms and spaces to control the lighting. Define proposed occupancy sensor types and technologies in Basis of Design.

Show OS locations on the reflected ceiling or lighting plan drawings. Do not make the Contractor responsible for determining OS locations. Follow manufacturer's spacing instructions to achieve total space coverage. Indicate the manufacturer's recommended separation from supply air diffusers and other building features which can affect proper OS operation. Include interferences from furniture, partitions, soffits, ceiling height variations, etc.

OSs may be passive infrared or dual technology (infrared/microphonic or infrared/ultrasonic). Infrared/microphonic OSs are preferred to infrared/ultrasonic OSs which are susceptible to nuisance activations from ventilation air currents.

- Supplemental power pack units shall be located above the ceiling (accessible) adjacent to the associated light switch/occupancy sensor location.
- Infrared/ultrasonic OSs shall operate at 40 kHz minimum to avoid interfering with hearing aids. See DG 5.2 for restrictions in animal facilities.
- OSs shall operate without producing an audible clicking noise during switching.
- OSs shall be powered by the lighting circuit. Battery powered OSs shall not be used.

Provide a schedule showing the required OS settings for each area type. Include "auto on", "auto off" and the "time delay" in seconds.

Provide manual switches in lieu of OSs in unit substation, electrical, mechanical and telecommunications rooms and in spaces where an unexpected shut-off of the lights could pose a safety risk.

When OSs control emergency lights, the OSs shall be listed for use with emergency egress lighting and equipped for "fail safe" operation.

Provide multi-contact OSs to control both the lighting and the ventilation.

- Use the lighting OSs to reduce the room ventilation, turn the ventilation off or widen the thermostat dead band during unoccupied periods.
- When an area has multiple ventilation zones, provide separate OSs for each ventilation zone to control both the lighting and the ventilation in that zone.
- Wire the OSs ahead of the manual "off" override switches so the lights can be turned off but the ventilation will remain on while the space is occupied.

Location of occupancy sensors shall be coordinated with furniture layout, ceiling mounted fixtures and devices, and other features that may impede its operation.

Photocell Sensors:
Specify photocell sensors in areas where daylight harvesting is practical.

Depending on the area, in response to photocell daylight readings, lighting control schemes can consist of bulk switching, staged switching, or dimming. Areas where a particular illumination level is required, such as an office, should use dimming. Areas such as atriums, gyms or public spaces should consider bulk or staged switching.

In rooms with large windows, orient fixtures in rows parallel to the windows. Provide daylighting controls to switch off or dim the fixtures near windows when the incoming daylight is high.

Photocell sensors shall be equipped with adjustable cloud or shadowing delay and adjustable set point functions.

Provide a schedule showing the required photocell settings for each area type.

Dimming Systems:
Dimming systems shall not be 'shared' among multiple rooms, unless those rooms are separated by a movable partition.

Whenever possible, install new systems to be similar in operation and function to other systems already in the building for easier understanding and operation by 'Users'.

In rooms with an A/V system, dimming system controls shall be interfaced with the A/V system User controls.

Master Automated Lighting Control System:
Prior to specifying a master lighting control system perform a cost-benefit analysis (at the schematic design phase) to justify this method and complexity of controls.

Lamp and Ballast Recycling

Lamps, ballasts and drivers being demolished or replaced shall be recycled in accordance with the University recycling policy contained in Specification 260500.

DESIGN GUIDELINE 265600
EXTERIOR LIGHTING

Scope

The overall goal of exterior lighting (street, parking lot, pedestrian and building-mounted lighting) is to improve and enhance the sense of safety and security in an efficient and sensitive manner. The lighting design shall take into consideration horizontal and vertical luminance and the uniformity of light distribution while minimizing glare, light pollution and light trespass. In addition, the lighting design should impart a sense of order, contribute to the overall campus aesthetic and ambience, enhance wayfinding, and strengthen U-M identity.

Related Sections

U-M Design Guideline Sections:
260513 – Medium, Low & Control Voltage Cables
260533 - Electrical Materials and Methods
260543 - Underground Services for Electrical Systems
SID-D – Energy and Water Conservation

U-M Master Specification Sections:
260513 – Medium, Low & Control Voltage Cables
260533 – Electrical Materials and Methods
260543 – Underground Services for Electrical Systems
260800 – Electrical Acceptance Tests
265600 – Exterior Lighting
329210 – Lawn Repair

U-M Standard Details:
265600 Series - Lighting Details

References

ASHRAE 90.1, "Energy Standard"
IESNA, "Lighting Handbook"
USGBC, "LEED Reference Guide for Green Building Design and Construction"

Design Process

This Design Guideline standardizes U-M exterior lighting equipment and installation requirements to strengthen U-M identity and to enhance lighting reliability and maintainability. However, it is not intended to limit creativity or innovation. Newer technologies and improved products will be considered, but must be approved by the Design Manager before being used. Significant deviations from this Design Guideline may require External Elements Design Review (EEDR) Committee or Regental approval.

At the end of Schematic Design, submit a preliminary exterior lighting plan showing the proposed lighting locations and general equipment types.

At the end of Design Development, submit the following electronic files for U-M mock-up and approval:

- Lighting plans showing dimensioned lighting equipment locations and types.

- Lighting simulations showing calculated results, including:
  - Name and version of simulation software used.
  - List of assumptions including Lamp Lumen Depreciation (LLD), surface reflectance values, and other pertinent modeling inputs.
  - Summary results for each area (maximum, minimum, average, avg./max., avg./min.).
  - Average maintained horizontal illuminance on grade, shown in a grid pattern, in footcandles or lux.
  - Average maintained vertical illuminance at 5 feet-6 inches above grade in at least two directions of main travel, in footcandles or lux.
  - Lighting power density.

- Lighting equipment specifications and manufacturer cut sheets, including:
  - Fixture types, descriptions, dimensions, optics, materials, finishes, light distribution types and IESNA-formatted photometric data files.
  - Lamp type for each fixture, and lamp wattage, color temperature, color rendering index and related life.
  - Pole and/or mounting support descriptions, dimensions, materials and finishes.

Design Requirements

Use the referenced U-M Master Specification Sections and Standard Details to specify exterior lighting equipment and installation requirements. Make these documents project specific, but do not deviate from the requirements without Design Manager approval. Turn on hidden text and follow the purple Spec Editor notes when editing specification sections.

Facilitate facial recognition through vertical illumination and careful selection of the color temperature and color rendering of the light sources.

Control light distribution to prevent direct glare to motorists, pedestrians and occupants of adjacent buildings, light pollution, and light intrusion onto adjacent private property.

Compensate for existing or planned light obstacles such as buildings, fully leafed trees, accumulations of fallen leaves and piles of snow.

Locate lighting to emphasize specific building components and site features (i.e. building entrances, fenestration patterns, columns, pedestrian/vehicular nodes or gateways). Locate lighting symmetrically at building entrances. Alternate lighting on both sides of long, straight sidewalks.

Locate lighting to frame important campus views and to avoid competing with existing illuminated and non-illuminated campus elements.

Locate lighting on U-M property. Do not locate lighting in City right-of-way or on private property. Obtain University Planner and City approval before installing University lighting in City right-of-way.

Provide lighting to illuminate emergency telephone kiosks and bus shelters within the project boundary if they are not currently illuminated.

Coordinate pole base locations with existing and planned underground obstructions including tunnels, duct banks, pipes and electrical cables. Provide custom pole base designs to attach poles to the tops of walls, bridges, parking decks, tunnels and similar structures.

Locate lighting outside the drip lines or root zones of significant (in size or age) vegetation. Request that U-M clear any significant vegetation if required.

Avoid lighting sporting and picnicking areas near Housing facilities because this encourages their use late at night.

Locate building-mounted lighting 12 feet minimum above grade. Lighted bollards, hand rail fixtures, in-wall fixtures, step lights, under-bench fixtures and in-ground fixtures are strongly discouraged because they are unreliable. Underwater pool and fountain fixtures are prohibited. Fixtures capable of being stepped on or touched shall not exceed 120 degrees F to the touch.

Provide code-required emergency lighting at building exit discharges. Exit discharges include landings, porches, stairs, ramps, and infrequently sidewalks, up to the point where they qualify as the public way. Feed this emergency lighting with generator-backed emergency lighting circuits when available, or with an indoor-located lighting inverter when a generator is not available. Do not specify local battery packs for exterior emergency fixtures.

The University is transitioning from fluorescent and metal halide to LED exterior lighting. Provide LED fixtures for new installations. Request Design Manager approval before matching non-LED fixtures when replacing or adding fixtures within an existing group.

Specify a lighting color temperature of 4000 - 4100 degrees K. Request Design Manager approval before matching a different color temperature when replacing or adding fixtures within an existing group.

Specify LED fixtures by stating manufacturer's standard lumen output. Do not specify LED fixtures by stating wattage which may change as technology advances.

Comply with Design Guideline SID-D requirements related to energy conservation.

- U-M exterior lighting is governed by life safety regulations which provide security to pedestrians at all hours of the night. Therefore it is exempt from ASHRAE 90.1 requirements for dimming or shutoff during nighttime hours.

- Exterior lighting power densities shall not exceed the power allowances in ASHRAE 90.1. Support U-M energy conservation efforts and provide power densities as low as reasonable within the overall lighting design goals.

On a project pursuing LEED certification, investigate earning the "Light Pollution Reduction" LEED point.

Provide maintained (not initial) exterior light levels in accordance with IESNA recommendations which are summarized for most applications in the following table. Base light level calculations on an ambient air temperature of 50 degrees F.

AREA DESIGNATION	CRITERIA	ATTRIBUTE	TARGET
Pedestrian ways distant from roadways	Horizontal illuminance	Average maintained illuminance on pavement	0.5 footcandle
		Average-to-minimum uniformity	5:1*
	Vertical illuminance	Average maintained illuminance at 5-feet/6-inches above grade in at least two directions (in direction of main travel)	0.5 footcandle
		Average-to-minimum uniformity	5:1*
Pedestrian ways adjacent to roadways	Horizontal illuminance	Average maintained illuminance on pavement	0.5 footcandle
		Average-to-minimum uniformity	5:1*
	Vertical illuminance	Average maintained illuminance at 5-feet/6-inches above grade in at least two directions (in direction of main travel)	1.0 footcandle
		Average-to-minimum uniformity	5:1*
Parking lots	Horizontal illuminance	Minimum maintained illuminance on pavement	0.6 footcandle
		Average-to-minimum uniformity	4:1
Roadways	Horizontal illuminance	Average maintained illuminance on pavement	0.9 footcandle
		Average-to-minimum uniformity	4:1
*Raise light levels at brightly lit building entrances when necessary to meet this uniformity.			

Feed street, parking lot and pedestrian lighting at 277 volts from 480Y/277 volt, 3 phase, 4 wire circuits. Feed them with four No. 4 AWG conductors plus a No. 8 AWG ground conductor in a 1-1/4 inch, Schedule 40 PVC or HDPE conduit. Alternate feeder circuit phases for each successive light so that a single phase failure will not leave large areas in total darkness. Balance the load across all three phases and limit the total load to 29 kVA. Before adding lighting to an existing circuit, request that U-M provide the existing load on the circuit.

Feed building-mounted lighting at 277 volts single phase. Feed them with No. 10 AWG conductors plus a No. 10 AWG ground conductor.

Provide dedicated circuits for emergency telephone kiosks, illuminated signs, parking lot electric gates and Parkmasters. Feed them at 120 volts single phase except when the equipment requires 277 volts single phase. Feed them with No. 10 AWG conductors plus a No. 10 AWG ground conductor in a 1 inch, Schedule 40 PVC or HDPE conduit. Coordinate the underground power conduits with the underground IT conduits.

Control street, parking lot, pedestrian, and building-mounted lighting with lighting contactors. See the applicable Standard Details. Lighting contactors shall be switched by a Building Automation System (BAS) Direct Digital Control (DDC) panel contact. Provide photocell control of the contactors only if DDC control is not available. Do not provide time switch control or individual photocells in the fixtures. Wire the control circuits so they are fail safe and the lighting will be energized in the event of a BAS System or photocell failure.

Products

Street and Parking Lot Lighting

In general, provide the U-M standard low profile, full cutoff, black aluminum LED fixtures on 30 foot, round, tapered, black aluminum poles. Pole height may be reduced when necessary to minimize light trespass on surrounding areas. On the top deck of parking structures, the poles shall be hinged at the base so fixtures can be maintained without requiring a bucket truck.

Pedestrian Lighting

Provide the U-M standard 16 inch, round globe LED fixtures with 6 spoke, black globe baskets, mounted singly, in doubles, or in fives on round, tapered, black aluminum poles. Specify single globe fixtures as 6020 lumens each, double globe fixtures and five globe fixtures as 4090 lumens each globe, and all fixtures with Type V distribution. As an alternative to mounting the fixtures on poles, mount them on column tops or with wall brackets. Specify pole lengths and mounting brackets to locate the horizontal center bands of the single globe fixtures at 12 feet, 0 inches above grade. Double globe and five globe fixtures can be taller.

Building-Mounted Lighting

In general, provide black aluminum LED downlight, hanging or wall sconce fixtures at building entrances to compliment the building's architecture. Floodlighting or highlighting of building facades is generally discouraged. Provide black aluminum LED wall packs at loading docks and similar service areas. Select and aim wall packs to minimize glare.

Lighting Contactors

Lighting contactors for street, parking lot and pedestrian lighting shall be NEMA 1, 3-pole, 4-wire, 480 volt, 100 amp, combination fused switch contactors with 50 amp fuses. They shall be electrically held and include a hand-off-auto switch and a 300VA, 277-120V control power transformer. These lighting contactors will be furnished by the U-M Utilities Power and Lighting Shop (734 647-7049) for installation by the contractor. Place the appropriate Standard Detail on the lighting drawings.

Lighting contactors for building-mounted lighting shall be NEMA 1, 3-pole, 4-wire, 480 volt, 30 amp, combination fused switch contactors with 20 amp fuses. They shall be electrically held and include a hand-off-auto switch and a 300VA, 277-120V control power transformer. These lighting contactors shall be provided by the contractor. Place the appropriate Standard Detail on the lighting drawings.

Junction Boxes

In-ground junction boxes shall be precast polymer/fiberglass, nominally 13 inches by 24 inches by 15 inches high, bottomless, with a single piece removable cover engraved "UM OUTSIDE LIGHTING".

Execution

Pole Bases and Underground Work

Direct the contractor to contact Miss Dig (800 482-7171 or 811) before performing excavation work.

When existing lighting is being demolished, specify the following:

- Power shall be maintained to lighting on the same circuits but outside of the work area.
- Demolished lighting fixtures and poles shall be turned over to the U-M Utilities Power and Lighting Shop.
- Existing pole bases and wiring shall be removed completely. Underground conduits may be abandoned in place. Holes left by the pole bases shall be backfilled. Pavement shall be restored to match existing and lawn areas shall be leveled and prepared with fresh top soil for re-seeding by the University.
- Temporary lighting shall be provided at the same lighting levels as the demolished lighting until the demolished lighting is replaced. As an alternative, construction fencing shall be provided to prevent public access to the area until the demolished lighting is replaced.

Locate pole bases in accordance with the appropriate Master Specification Sections and Standard Details. Bases should not be located in sidewalks. They should be located to minimize impact on snow removal and lawn mowing, and where they will not be damaged by maintenance equipment.

Show on the plan drawings a spare 1-1/4 inch conduit stubbed out from every fourth or fifth pole base, especially at corners and intersections, for expansion of the lighting circuit in the future. Select pole bases with one or two active conduits. Do not exceed three conduits per pole base. Stub out the spare conduits 3 feet and aim them toward open lawn areas.

Provide a 5/8 inch diameter x 8 foot long copper clad ground rod for each light pole base, and connect it to the pole ground lug. See the Standard Details.

Specify Schedule 40 PVC or HDPE conduits to feed in-wall, step and in-ground lighting. Develop a detail requiring conduits to enter fixtures only from below.

Design underground conduit runs parallel to parking lot edges, sidewalks, and driveways, and adjacent to the pavement edges, to avoid interfering with future landscaping or other excavations.

Provide in-ground junction boxes at key locations to enable expansion of the lighting in the future. Avoid locating in-ground junction boxes in sidewalks or driveways. Hide them in landscaping whenever possible.

When streets, parking lots, or sidewalks are cut for the installation of any underground utilities, provide a 6 inch sleeve for future exterior lighting circuits. See the Standard Details.

Lighting Control

Locate lighting contactors indoors, preferably on the inside of an exterior wall. When feeding street, parking lot and pedestrian lighting, penetrate the exterior wall below grade with Schedule 40 PVC conduits. Seal the penetrations per Specification Section 260533. Extend the conduits to in-ground junction boxes located 5 feet from the building wall.

Quality Assurance

Specify that the Contractor contact the U-M Code Inspection Department (734 764-2457) before pouring concrete, backfilling excavations, and energizing circuits.

Record Drawings

Specify that electronic files of record drawings or scanned mark-ups of construction drawings be provided at Substantial Completion for forwarding to the U-M Utilities Power and Lighting Shop. Record drawings shall show the dimensioned locations of lighting poles, stubbed-out spare conduits, in-ground junction boxes, underground sleeves, the circuit numbers for all circuits, and deviations from the design. Dimensions shall be from permanent building or landscape features.

VOICE AND DATA COMMUNICATIONS

Related Sections

U-M Design Guideline Sections:
SBA 5.4- Telecommunication Rooms
260500 – Common Work Results for Electrical
260526 – Grounding and Bonding for Electrical
260533 –Electrical Materials and Methods
260543 - Underground services for Electrical Systems

U-M Master Specification Sections:
260533 –Electrical Materials and Methods
260543 - Underground services for Electrical Systems
272000 - Voice and Data Communications

U-M Standard Details:
260000 Series - Electrical Standard Details

Reference Documents:
ANSI/TIA/EIA-568-B, "Commercial Building Telecommunications Cabling Standard"
ANSI/TIA/EIA-569-A, "Commercial Building Standard for Telecommunication Pathways and Spaces"
ANSI/TIA/EIA-607, "Grounding and Bonding Requirements for Telecommunications in Commercial Buildings"

Design Requirements

Provide Building Entrance (BE) rooms, Telecommunication Rooms (TRs), telecommunication cable pathways, Work Area Outlets and incidentals as described below and in accordance with the Program Documents. Coordinate the telecommunications system design with the Design Manager. Copy the related Master Specification Sections and appropriate Standard Details into the design documents, and edit them to make them project specific.

Telecommunications systems in most U-M Ann Arbor Campus buildings are operated and maintained by the U-M ITSComm Department. In addition, ITSComm is usually involved with the telecommunications systems in U-M Health System buildings, on the U-M Dearborn and Flint Campuses, and at off-campus and leased facilities. This Guideline provides requirements for most University owned or operated buildings, even if the "serving utility" is not ITSComm.

System Description

The BE room is the main termination point in a building. TRs are distribution and termination rooms located on each floor of a building and serve Work Area Outlets within 293 cable feet (including 6 feet of slack at the TR room and 3 feet at the Work Area Outlet). If cable lengths will exceed 293 feet, provide additional TRs. The BE may also be the TR for that floor. Stack the BE and TRs wherever possible. The BE is connected to TRs via backbone cables in conduits. The BE is connected to equipment external to the building via service entrance cables in duct banks and outside plant cables in direct buried conduits. See Design Guideline SBA-C for additional architectural, mechanical and electrical requirements related to the BE and TRs.

ITSComm generally provides the network equipment, cabling and terminations from their network backbone to the Work Area Outlets, including the faceplates and telephone instruments at the outlets. Provide ITSComm with AutoCAD files of the completed CD phase telecommunication plan drawings. ITSComm will add numbers to the Work Area Outlets and cabling information to the drawings for their use in providing the cabling and terminations.

The current cable plant provides multiple 4-pair cables of copper conductors from each Work Area Outlet to the nearest BE or TR. These cables are used for all voice, telephone set power, and data services, including point-to-point and local area networking. Separate RG-6 coaxial cables are installed to locations noted for closed circuit TV and/or cable TV.

All Work Area Outlet (station) wiring will be home run from the Work Area Outlet to the nearest TR. For transmission integrity, no intermediate splices or terminals will be allowed. During renovations, if the existing cables will be too short, modify the existing cable pathways as necessary so new cables can be installed.

Telecommunication Service Entrance and Outside Plant Cabling

Consult with the Design Manager and ITSComm prior to proceeding with the telecommunication service entrance design.

Duct Banks, Manholes, Hand Holes and Underground Conduits

Provide a minimum of four 4-inch service entrance conduits in a concrete-encased duct bank extending from a location specified by ITSComm (typically a telecommunication manhole) to the building. Slope duct banks downward toward manholes and away from the building a minimum of 6 inches per 100 feet. Duct banks shall not route water from manholes into the building or contain traps between manholes where water may accumulate.

Encase service entrance conduits in concrete except where they terminate at poles. When terminating at a pole, clamp the conduits rigidly to the pole at a 90-degree separation from power conduits clamped to the pole.

Provide 12 foot by 6 foot by 7 foot high (inside dimensions) telecommunication manholes unless smaller manholes are approved by ITSComm.

Provide 1-1/2 inch minimum direct-buried conduits for outside plant cables serving emergency telephone kiosks, digital signs, parking controls and similar outdoor equipment.

Underground conduits shall not include more than 180 degrees of total bends or exceed 400 feet in length between pull points (manholes or hand holes), and shall have a bending radius of at least 10 times the conduit diameter. Provide manholes or hand holes in straight sections of conduit runs when necessary to meet these requirements. Hand holes shall not be used in place of conduit sweeps for directional changes in underground conduits. Conduit bodies, specifically LB fittings, are not allowed anywhere. Provide a nylon pull string in each conduit.

Provide a 6 inch wide red marker strip in the trench 1 foot above the duct bank or direct buried conduit.

In multi-utility trenches, the minimum spaces between telecommunication conduits or cabling and other facilities are: 3 inches where separated by concrete, 4 inches where separated by masonry, and 12 inches where separated by well-tamped earth.

Where conduits enter a building, extend the conduits 6 inches beyond the interior wall or floor. Plug spare conduits with water-tight mechanical seals.

If the termination point (typically the BE) of the building service entrance or outside plant cables is more than 50 feet inside the building, or if the cables run through plenum spaces, install the cables in galvanized steel rigid metal conduits. As an alternative and only when approved by ITSComm, provide a 4 foot by 4 foot minimum backboard where the cables entering the building can be spliced to cables rated for indoor use. Provide the NEC-required working space in front of the backboard. Piping and ductwork shall not be routed above the backboard.

Direct Buried Service Entrance Cables

Direct-buried service entrance cables are typically allowed only at off-campus and leased facilities, and only when specifically noted in the Program Documents. Consult with ITSComm prior to proceeding with direct-buried service entrance designs.

Inside Plant Cabling

Telecommunication Cable Pathways

Provide a continuous cable pathway between each Work Area Outlet and the nearest TR to support and protect the station cables. Acceptable cable pathways in order of preference are conduits, cable trays, J-hooks, wireways and underfloor duct systems. Cable pathways shall be continuous and unobstructed, accessible for maintenance and installation of additional cables with minimal disruption to building occupants, and located at a safe working height. Cable pathways serving multiple outlets shall include spare capacity for future use.

Conduits

Provide a conduit from each Work Area Outlet to the nearest TR or cable tray, or as a minimum to above the ceiling. Size conduits for a maximum of 40 percent fill. Minimum conduit size to an outlet box shall be 1 inch, except conduits to wall telephone outlet boxes may be 3/4 inch minimum. Alternate larger conduit sizes will be noted in the Program Documents.

Daisy chaining of outlet boxes is unacceptable, but up to three outlet boxes may be served from one NEC-sized junction box. Size the conduit feeding the junction box as follows:

- 1-1/4 inches for serving two outlet boxes.
- 1-1/2 inches for serving three outlet boxes.

Provide a 1-1/4 inch conduit for serving up to three 1-gang outlets in a surface raceway. Provide multiple 1-1/4 inch conduits to surface raceways containing high outlet densities.

Design conduit runs for minimal bends and as short a path as possible. Provide pull boxes sized in accordance with the NEC in straight sections of conduit every 100 feet or 180 degrees of total bends. For conduits over 2 inches in diameter, consult ITSComm on pull box size. Bends in conduits over 2 inches shall be long sweeps, and no conduit shall have a bend radius less than 10 times the conduit diameter. Conduit bodies, specifically LB fittings, are not allowed.

Conduits shall not be routed within 12 inches above or 4 inches horizontal from hot equipment and pipes, including boilers, water heaters, incinerators, hot water heating lines and steam lines, or through areas in which flammable or other hazardous material may be stored.

Terminate horizontal conduits entering a BE or TR 6 inches inside the room. Extend conduit floor sleeves 6 inches minimum above the floor. Terminate conduits with nylon insulated grounding bushings. Provide a nylon pull string in each conduit.

Fire seal between recessed outlet boxes located on opposite sides of a fire rated wall if the boxes are less than 24 inches apart.

After cables are installed, seal floor sleeves and wall penetrations in fire-rated walls using listed fire-sealing systems.

Cable Trays

Telecommunication cable trays shall be of the aluminum ladder type, or galvanized or zinc electroplated steel wire basket type. Aluminum center spline cable trays may be used only where approved by ITSComm, and only when supported so rigidly they do not tilt if unevenly loaded.

Size cable trays based upon the square footage of the area being served, the number of Work Area Outlets planned for the space, and the diameter of the cables as follows:

- If Work Area Outlet locations are not yet known, assume a minimum of one outlet for every 100 square feet of useable floor space served by the cable tray.

- Standard Work Area Outlets are served with three 4-pair cables with an average cable diameter of 0.165 inch each.
- Provide a minimum of 50 percent spare cable capacity for future use.
- The maximum allowable cable tray fill shall not exceed 50 percent of the tray cross-sectional area.

Design cable tray installations as follows:

- Provide 12 inches minimum access above and 18 inches minimum access on one side of cable trays for ease of cable pulling.
- Locate cable trays so they can be accessed safely from a ladder, taking into consideration access restrictions including ducts, pipes, conduits, light fixtures and ceiling grids.
- Ducts, pipes, conduits, light fixtures, ceiling grid support wires or other mechanical or electrical items shall not be attached to, pass through, or located within the cross-sectional area of cable trays.
- Cable trays shall not be used in place of conduit runs specified for computer room tie cables or other riser type cable installation.

Terminate cable trays entering a BE or TR 6 inches inside the room. Provide barriers in cable trays when necessary to separate circuits of different low voltage levels.

J-Hooks

Telecommunication cables may be installed in J-hooks above accessible ceilings in rooms, but J-hooks shall not be installed in corridors. Provide conduits or cable trays in corridors because the high quantity of cables will result in cable damage if the cables are installed in J-hooks.

Cables may be installed in J-hooks in unfinished open ceiling areas, but only if a minimum of 10 feet AFF, only if the cables will be protected from damage, and only if the cables are completely accessible for replacement. Cables shall not be installed in J-hooks in finished open ceiling areas or above inaccessible ceilings.

If cables in J-hooks penetrate a corridor wall from a room, and the distance from the wall to the cable tray is more than 18 inches, provide conduit stubs from the wall to the cable tray.

J-hooks for telecommunication cables shall be zinc electroplated steel or plastic, color coded silver or gray, listed for use in plenum spaces, with a minimum of 1 inch-wide cable support area, and rated for use with Category 6A UTP and similar cables. J-hooks shall be spaced a maximum of 5 feet apart. J-hooks installed to support telecommunication cables shall not be used to support any other types of cables.

Wireways and Underfloor Duct Systems

Power poles and surface raceways are generally not preferred, but power poles may be used to serve furniture systems in renovations. Surface raceways may be used to serve multiple outlet locations in renovations, at laboratory and computer benches, or for surface mount cable routing where conduit is inappropriate. Underfloor duct systems may be used to serve furniture not located against a wall, but only if cables can be easily replaced. Provide 20 percent spare cable capacity for future use. Provide dividers between power and telecommunication wiring.

Conduit connections to power poles and multi-outlet surface-mounted raceways shall be a minimum of 1 1/4 inches. Provide 6 inch x 6 inch x 4 inch junction boxes when necessary to transition to the top of power poles. Provide conduits to both ends of surface-mounted raceways containing high outlet densities. Maintain the cable minimum bend radius at all times.

Wireways may be built into furniture systems including wall partitions, auditorium seating, desks and laboratory benches, but only if the cable minimum bend radius is maintained at all times and the cables can be easily replaced.

Floor surface and under-carpet cable covers are strongly discouraged and may be used only where approved by ITSComm.

Work Area Outlets

Provide sufficient Work Area Outlets to meet current and anticipated future needs. Coordinate with the Design Manager and ITSComm to determine User needs. Consider the following:

- Most outdoor areas and parking structure floors require at least one emergency telephone.
- Laboratory suites and Housing facility lobbies typically require a campus telephone.
- Animal housing facilities typically require data connections to animal room monitoring panels.
- Housing facility student rooms require one data outlet per pillow, one voice outlet per room, and one RG-6 coaxial cable TV outlet per room.
- Medical facility patient waiting rooms typically require an RG-6 coaxial cable TV outlet.
- Housing facility laundry rooms require one data outlet per clothes washer, one per clothes dryer, and one for the Blue Bucks control panel.
- Offices typically require two outlets, one on each wall perpendicular to the door wall.
- Elevator controllers, unit substation watt-hour meters, building energy and water meters and sub-meters, and the building's main temperature control DDC system head end control panel typically require data connections.
- Parking attendant booths, cash registers in cafes and shops, Blue Bucks control panels and vending machines typically require data connections.
- Audio/visual racks and devices, classroom and conference room scheduling panels, and many lighting control panels and control devices require data connections.
- Buildings with U-M Wireless Network service require outlets for Wireless Access Point (WAP) devices. Request ITSComm to identify WAP outlet locations.

Outlet boxes shall be 4-11/16 inch sheet metal outlet boxes a minimum of 2-1/8 inches deep, with a double-gang plaster ring, except wall telephone outlet boxes shall have a single-gang plaster ring. ITSComm will provide the outlet box faceplates.

Provide floor boxes and poke-throughs sized to accommodate all power, data and audio/visual receptacles and jacks required for the project. Provide spare capacity for future use, dividers between power and telecommunication wiring, and cable training space to maintain cable minimum bend radii. Covers shall be flush, captive, and shall not pop open when rolled on by cart wheels or when stepped on with high heel shoes. Floor boxes and poke-throughs shall be approved by ITSComm.

Grounding, Bonding and Electrical Protection Requirements

Provide a 1/4 inch x 1 inch x 12 inch copper ground bus bar in each BE and TR, and connect each to the ground bus bar in the nearest electrical panel on the same floor with a No. 6 AWG, green insulated, stranded copper ground wire. See Design Guideline SBA-C.

Provide a No. 6 AWG, green insulated, continuous stranded copper ground wire from each TR ground bus bar to the BE room ground bus bar, and from the BE room ground bus bar to the main building ground bus bar (usually located in the unit substation room). The resistance to building ground shall be 1 ohm maximum.

Provide protection for ground wires subject to physical damage or abuse. Non-metallic conduit is preferred. Where metallic conduit is used, bond the conductor to the conduit at both ends.

Bond telecommunication conduits to cable trays using listed grounding bushings and ground straps or using listed conduit grounding clamps. Bond conduits, cable trays, metallic wireways and metallic underfloor duct systems to the nearest BE or TR ground bus bar with No. 12 AWG, green insulated, stranded copper ground wire.

Bond telecommunication cable shields on one end to the nearest BE or TR ground bus bar.

DESIGN GUIDELINE 273523
EMERGENCY RESPONDER RADIO COVERAGE

Scope

Provide two-way Emergency Responder Radio Coverage (ERRC) in new buildings and in high rise major renovations to enable communication between emergency responders at the exterior perimeter of the building and emergency responders within the building. All areas of the building shall have code compliant radio coverage. New buildings which will achieve radio coverage without amplification are exempt.

Related Sections

U-M Design Guideline Sections:
SBA 5.4 – Telecommunications Rooms
SBA-C-H – Telecommunications Rooms in UMHHC Facilities
260513 – Medium, Low and Control Voltage Cables
260526 – Grounding and Bonding for Electrical
260533 – Electrical Materials and Methods
272000 – Voice and Data Communications

U-M Master Specification Sections:
260513 – Medium, Low and Control Voltage Cables
260526 – Grounding and Bonding for Electrical
260533 – Electrical Materials and Methods
272000 – Voice and Data Communications

Reference Documents:
Federal Communications Commission Regulations, http://www.ecfr.gov/
IFC, "International Fire Code"
MBC, "Michigan Building Code"
Michigan Public Safety Communications System, http://michigan.gov/mpscs.
NFPA-72, "National Fire Alarm and Signaling Code Handbook" (Handbook includes the code plus non-binding but informative Annexes and Supplements)

Design Requirements

1. U-M emergency responders include but are not limited to the following:
   - U-M Division of Public Safety and Security (DPSS).
   - U-M Hospitals and Health Care Security and Housing Security.
   - U-M OSEH and Plant Operations Departments.
   - City of Ann Arbor Fire and Police Departments.
   - Washtenaw County Sheriff and Michigan State Police Departments.
   - Huron Valley Ambulance.

2. Provide plan drawings showing equipment locations. Provide a performance-based specification. The detailed technical design of the ERRC should be by the Contractor.

3. Provide ERRC utilizing a bidirectional amplifier (BDA) "leaky" cable system, an amplified distributed antenna system (DAS), or other proven signal amplification technology capable of achieving the required radio coverage.

4. ERRC shall provide coverage on the 800 MHz band.

5. ERRC shall permit the simultaneous use and interoperability of analog and digital modulation radios.

6. ERRC shall be neutral host and nonproprietary.

7. ERRC shall not infringe on or be overrun by adjacent building communication systems or cellular telephone service provider systems.

8. ERRC shall be designed to maintain full system operation during a normal power outage. It shall transfer to and from an Uninterruptible Power Supply (UPS) without interruption.

9. ERRC shall comply with the requirements of and obtain licensee consent from the Michigan Public Safety Communications System.

10. When required by the program documents, add cellular telephone signal enhancement to the ERRC. Coordinate with ITSComm for connections to cellular telephone service provider headend equipment.

11. Do not combine the ERRC with other radio systems such as:
    - Wi-Fi systems.
    - Pager systems.
    - Medical telemetry systems.

12. Provide ERRC expandability to permit future additions and changes to the emergency responder radio frequencies.

13. Design the ERRC to provide signal amplification on every floor of the building. During installation, install infrastructure (equipment space, electrical power and cable pathways) throughout the building. However, install amplification only on floors that fail to pass the Contractor's pre-installation and acceptance tests.

14. ERRC headend including all common equipment shall be located in a room on the main floor or one floor below grade. Locate the headend equipment in the telecommunications Building Entrance (BE) room whenever possible. See Design Guideline SBA-C.

15. Locate the EERC node equipment in Telecommunications Rooms (TRs).

16. Provide a UPS sized to provide emergency power to ERRC headend and node equipment for a minimum of 24 hours. Connect the UPS to a generator-backed emergency power circuit if available.
    - UPS shall be enclosed in a NEMA Type 4 enclosure.
    - UPS batteries shall be of the sealed maintenance-free type.
    - Provide battery ventilation in accordance with code.

17. Provide the ERRC headend room and the TRs containing ERRC equipment with continuous air conditioning to alleviate heat build-up within the rooms. Connect the air conditioning system to normal building power circuits. The ERRC equipment can operate at an elevated temperature during a power outage.

18. Determine whether code requires rooms housing ERRC equipment to be separated from the remainder of the building by rated fire barriers.

19. Provide pathway (circuit) survivability in accordance with NFPA 72.

20. Provide a risk analysis in accordance with NFPA 72 to determine:
    - Whether the pathway (circuit) survivability level shall be Level 2 or Level 3.
    - Whether the antenna cables shall be plenum rated and/or Circuit Integrity (CI) type cables.

21. Provide supervision of the ERRC antennas, signal boosters, power supplies and UPS.
    - Provide supervisory and trouble alarm output contacts indicating an impairment. Connect the supervisory and trouble alarm contacts to the building fire alarm system.
    - Program the fire alarm system to relay ERRC supervisory and trouble alarm signals to the appropriate supervising station (DPSS, UMHHC Security, etc.). Instruct supervising station personnel to notify the Ann Arbor Fire and Police Departments of an impairment.

22. If outdoor antennas are required, obtain U-M approval of antenna locations. Provide access for maintenance and code-required fall protection.

23. Identify all required outside plant fiber optic cables required to connect ERRC to remote antennas, other services and other buildings. These cables will be provided by others.

Specification Requirements

1. Include the following in the ERRC performance specification.
    - ERRC equipment shall be FCC certified.
    - The Contractor shall be FCC licensed as required by code.
    - The Contractor shall submit detailed shop drawings for approval.
    - Components shall be industry standard and readily available to U-M.
    - Performance specifications for major components.
    - Requirements for a stock of spare parts.
    - ERRC headend and node equipment shall be securely attached to racks or backboards.
    - Antennas shall be securely attached independently from the work of other trades.

- Required separation distances between ERRC equipment and other mechanical, electrical and telecommunications equipment.
- Required separation distances between ERRC antennas and antennas of other radio systems.
- Cables shall be installed hidden from view except in open ceiling areas. Antennas may be installed exposed on the underside of ceilings.
- Components shall be labeled with unique part or address numbers which correspond to numbers shown on the Contractor drawings.
- Label the ERRC headend room door to identify the presence of headend equipment.

2. Plant Radio Shop personnel will operate and maintain the ERRC. Specify the following to support operation and maintenance activities:
   - Four paper copies of operation and maintenance manuals.
   - An electronic file storage device (USB drive, SD card, etc.) containing the final system software including the master program generic to the system, the software associated with each programmable piece of equipment, and the software licenses and passwords required by the Plant Radio Shop to perform programming changes.
   - A minimum of 8 hours of Owner training on operation and maintenance.
   - One year of customer service from the date of acceptance by U-M.
   - A parts and labor warranty for 1 year from date of acceptance by U-M.
   - The first code-required annual operational test at the end of 1 year.

3. Code requires one set of ERRC technical information and documentation to be filed in the Fire Command Center (if one exists) or in the ERRC headend room. Specify one set of the following:
   - ERRC bid specifications and drawings.
   - ERRC as-built drawings.
   - Summary of ERRC frequencies utilized.
   - Summary drawing showing locations of ERRC headend and node equipment, and antenna sites.
   - Table of effective radiated power at antenna sites.

Bidding Requirements

1. Before bidding, forecast which floors will likely require amplification.
2. To bid the work, request a base bid price for the EERC headend and for amplification on just the floors forecast to require amplification. Request an add price for adding amplification on each additional floor and a deduct price for deleting amplification from each floor.
3. As an alternative bidding method, request a base bid price for just the ERRC headend. Request an add price for adding amplification on each floor.

Testing Requirements

1. The Contractor shall perform pre-installation testing for percent coverage and signal strength in accordance with code. Testing shall not be performed until after the building is fully enclosed (roof, exterior skin, doors and windows are installed), and interior ceilings and walls are in place.
   - Measure the percent coverage and signal strength in both the critical and general areas on each floor. Measure the signal strength receivable within the building and the signal strength received when transmitting from within the building.
   - Install amplification only on the floors which fail to have the required percent coverage and signal strength.
   - Provide spare capacity to install amplification later on floors that pass pre-installation testing but may drop below the required percent coverage or signal strength when construction and furniture move-in are completed.

2. The Contractor shall perform acceptance testing for percent coverage and signal strength in accordance with code. Testing shall be performed after furniture move-in. OSEH personnel, U-M Plant Radio Shop personnel and the project's Commissioning Authority will witness the testing.
   - Demonstrate full compliance with IFC and NFPA 72 requirements.
   - Demonstrate full compliance with specification requirements.
   - Modify or add equipment, cables and antennas as required to achieve the code-required performance. Resolve specification deviations.

CLOCK SYSTEMS

Scope

Provide clocks and clock accessories to the extent required by the Owner's Project Requirements (OPR) document.

Related Sections

U-M Master Specification Sections:
275313 –Clock Systems

Design Requirements

For new buildings, building additions and major renovation projects, provide GPS wireless clocks. Submit a request to the U-M Fire Protection Shop (through the Design Manager) to perform an analysis of the GPS signal strength in the project area. Provide a GPS signal transmitter if necessary to assure adequate GPS signal strength.

For smaller renovation projects, match the building's current clock system if the current clock system is working adequately. If the current clock system is not working adequately, provide GPS wireless clocks.

Use U-M Master Specification 16730 to specify GPS wireless clocks and signal transmitters. When matching the building's current clock system, contact the U-M Fire Protection Shop for their recommendations on specification requirements.

Equipment Requirements

In general, provide 120 volt powered, GPS signal synchronized, wireless, single face wall mounted or double face edge mounted, analog clocks. Battery powered GPS wireless clocks may be used only when approved by the Users and only when the Users acknowledge they must periodically replace the batteries.

In general, clocks shall be 12.5 inch nominal diameter with white faces, polycarbonate frames (color by the A/E), polycarbonate lenses, black standard numerals and sweep second hands.

When a GPS signal transmitter is required, coordinate with the clock manufacturer and specify the appropriate 1 watt output model. Locate the transmitter in accordance with the manufacturer's instructions.

Installation Requirements

Clocks in classrooms should be located on side walls so they are visible to both the professor and the students.

Provide a simplex NEMA 5-20R receptacle in a flush-mounted single gang outlet box to power each 120 volt clock and GPS signal transmitter.

Provide the clock manufacturer's standard lock-type hanger which requires a sequence of movements to install and remove the clock.

SECURITY SYSTEMS

Scope

Provide a security system when required by the Program Documents.

Provide a security system that connects to a Larse Class A remote transmitting unit in each building for notification at the Church Street Security Office. The system shall have proprietary Class B circuits.

Design Requirements

Locate sensors so that they are accessible for maintenance by the use of a ladder only. No lifts or scaffolding shall be required for maintenance.

Locate the security system control panel in a clean, dry, heated and ventilated closet or electrical room near a building entrance. Locate the panel in the same closet or room as the fire alarm system control panel or Larse panel if possible. The panel shall not be located in a building corridor, loading dock area or other high traffic area.

Equipment Requirements

The security system shall be resistant to damage from power system surges, spikes and voltage dips. The system shall be emergency battery backed.

The security system shall be field programmable. When a special device is required to perform field programming, 1 programmer shall be provided as part of the system unless the University already owns an appropriate programmer.

All wiring for the security system shall be in conduit or surface raceways. Use concealed conduit whenever possible and practical. When concealed conduit cannot be used in finished areas, provide surface raceways.

Route security system wiring in separate conduits or surface raceways from the other building wiring.

Installation Requirements

Instruct the Contractor to wire the sensors in each zone in numerical order beginning with the detector closest to the control panel, and progressing away from the control panel.

Instruct the Contractor to provide a typed list identifying all zones and sensors, including the sensor types and locations.

Instruct the Contractor to perform testing in accordance with Section 16950, and to provide the University Project Coordinator with test reports.

DESIGN GUIDELINE 283100
FIRE DETECTION AND ALARM

Scope:

This guideline defines the requirements and standards for design of a new fire alarm system or the expansion of an existing system. The guideline covers basic requirements for system design, fire alarm control panels, initiating devices, notification appliances, wiring, and central station monitoring.

Related Sections

U-M Design Guideline Sections:
1.0 DG – Codes and Regulatory Agencies
2.1 DG - Owner's Project Requirements and Basis of Design Documents (OPR and BOD)
5.11 DG - Fire Command Center
6.3 DG 260513 - Medium, Low & Control Voltage Cables
6.3 DG 260526 - Grounding and Bonding for Electrical
6.3 DG 260533 - Electrical Materials and Methods
6.3 DG 260800 - Electrical Acceptance Tests
6.3 DG 273523 - Emergency Responder Radio Coverage

U-M Master Specification Sections:
7.3 MS 283100 Fire Detection and Alarm System

U-M Standard Details:
26000000 - Series Details
28000000 - Series Details

Reference Documents:
- Michigan Building Code (MBC)
- Michigan Electrical Code (MEC)
- Michigan Elevator Code
- NFPA 101 - Life Safety Code

Design Requirements:

Use U-M Master Specification 283100, "Fire Detection and Alarm Security", as Basis for Design (BOD) and specifying fire detection and alarm systems. Edit the specification and details to make them project specific. When editing the specification, turn on hidden text and follow the Spec Editor notes.

The U-M Fire Marshal Office reviews fire alarm system designs and inspects installations for all applicable U-M projects. U-M Electrical Inspectors along with U-M Fire Alarm Electricians will witness fire alarm system testing on all applicable U-M projects.

Michigan Bureau of Fire Services (BFS) reviews fire alarm system designs and inspects installations for health care, instructional, dormitory, and child care spaces.

Fire alarm systems and accessories shall be UL listed and FM Global approved.

For new buildings, that by code, are not required to have a fire alarm system installed, perform a risk analysis in coordination with NFPA 550 and U-M Risk Management Department, and submit to the Design Manager. Through this analysis and in conjunction with approval from Executive Director of AEC, determine if a fire alarm system should be installed even though it is not required by code. Include risk analysis report in the BOD.

If an existing building is not protected by a sprinkler system or area smoke detectors, or is only partially sprinkled or partially protected by area smoke detectors, follow the new building risk analysis guidelines above for renovation and expansion projects.

New fire alarm systems shall have one or more fire alarm control panels (FACP's) as required by the size of the project area. In addition, new fire alarm systems shall be installed with 25% (additional) spare capacity in all initiating circuits, notification appliance circuits, power supplies, amplifiers, batteries, and related components of the overall system.

Whenever possible, expand and/or extend the existing system unless otherwise directed by the Design Manager. Existing fire alarm systems shall always maintain 5% spare capacity in all power supplies, amplifiers, batteries, and related components of the overall system. If a system's capacity is found to be below this requirement notify the Design Manager.

The fire alarm system shall also include provisions for connection to the University MOSCAD system which is monitored by U-M Division of Public Safety & Security (DPSS).

See Design Guideline 5.2, 'Animal Facilities' for the specific fire alarm sound and strobe requirements in animal housing areas.

Project plan view drawings for fire alarm systems shall include room names and furniture layouts. Coordinate design with reflected ceiling plans noting locations of soffits, beam pockets, skylights, etc.

FACP's and Remote Annunciators:

FACP's shall incorporate the following:

- Modular design with solid state, microprocessor based electronics, power-limited design.
- Programs stored in a non-volatile flash EPROM memory within the FACP. Loss of primary and secondary power shall not erase the program stored in memory.
- Capable of being programmed by the Owner on site to accommodate expansion or sequence of operation changes.
- Display only those primary controls and displays essential to operation during a fire alarm condition.
- Audible signals that sound during alarm, supervisory, or trouble conditions.
- Battery capacity (secondary power) to operate the entire system (except door hold-open and door control devices) upon the loss of primary power for a period of 24 hours in a normal supervisory mode followed by 5 minutes of evacuation alarm operation or 15 minutes of voice/alarm operation as applicable.

The system shall be capable of being walk tested by one person.

Locate FACP and remote annunciator panels in the fire command center, building lobby or in a secure, clean, dry, heated, and ventilated closet or electrical room near the building entrance. The panels shall not be located in a vestibule, loading dock area, or other high traffic area. One panel should be located in an accessible location visible and adjacent to the building entrance selected for emergency response. Coordinate locations with Design Manager, DPSS, and Fire Safety Service.

Remote annunciators shall duplicate the display, programmable function keys, alarm functions/controls, and alarm audible signals of fire alarm control panels.

Microphones shall be included with remote annunciators when the fire alarm system includes emergency voice/alarm communications or a mass notification system, along with the same pushbuttons as the FACP for selecting pre-recorded voice messages, and the same controls to choose total building or selected areas communications.

Provide an empty 1" conduit from FACP to Building Entrance (BE) telecommunications room.

Initiating Devices:

Initiating devices shall be addressable. In general, provide Class B initiating device circuits except where an applicable code requires a different circuit class.

Locate area smoke detectors, duct smoke detectors, and heat detectors so that they are readily accessible for maintenance. Provide accommodations for accessing all devices; no lifts or scaffolding shall be required for maintenance. Those devices in restricted areas such as elevator shafts shall be easily accessible, from a non-restricted area, via access doors. Avoid locating detectors above sloped auditorium floors or above steps.

Initiating devices shall be listed for the environment they are to be installed. These areas include but are not limited to locations with temperatures below 32F, wet/damp locations, and areas where the room will be occasionally hosed down.

Manual Pull Stations

Manual pull stations shall be located at all exit doors.

Pull stations in Residential buildings, areas where children are present, and as noted in BOD shall have protective covers with audible alarm (when cover is lifted).

Smoke Detectors

Smoke detectors are required above FACP's, remote annunciator panels, and NAC panels.

Michigan Elevator Code requires smoke detectors be located in elevator machine rooms, above machine room-less elevator equipment, elevator lobbies, and at the top of sprinklered elevator hoist ways to initiate an elevator recall. These smoke detectors shall be provided with the building fire alarm system and be connected to the FACP.

When the need for door hold-open devices (and associated door release service devices) is defined during schematic design, the associated devices shall be powered by a normal power

120V branch circuit. The associated smoke detectors shall report to the fire alarm system, and the normal power door hold open circuits are then opened by the fire alarm system via control modules. Carefully coordinate associated fire system components and door hardware specified in the architectural section.

Provide smoke detectors in the following locations:

- Substation rooms
- Telecommunication/data rooms
- Electrical power rooms
- Mechanical rooms
- Recycling and trash rooms

Smoke detectors in resident areas of residence halls and as noted in BOD shall have wire screen covers that are UL listed for the fire alarm system being installed.

Do not locate smoke detectors at the top of atriums or skylights. In these applications use beam or aspirated type detectors where applicable. Avoid locating smoke detectors where direct sunlight, high humidity, stagnant air, or turbulent air will cause maintenance problems.

Smoke detectors when not in plain view and more than 10 feet above the floor, provide smoke detector remote alarm indicators and test switches mounted in plain view at 44 inches above the floor.

Duct Smoke Detectors

Locate duct smoke detectors at locations defined by manufacturer and/or by the mechanical contractor to have a laminar flow across the detector. Do not locate duct smoke detectors downstream of humidity injection points or in outside air intake plenums.

Duct smoke detectors shall be visible and accessible to responding personnel, requiring no more than the use of an 8'-0 step ladder to access. If the duct detector must be located where it is concealed and/or in accessible, provide a remote indicator light and test pushbutton in a nearby accessible location.

Duct smoke detectors shall report to the FACP, and the FACP shall operate a control module to stop the associated fan and close associated dampers.

All duct smoke detector installations shall include a 'duct detector interface box' as shown in Standard Details 28310006, 28310007, or 28310008. The Temperature Control Contractor shall provide the interface box. Locate the duct detector interface box so that a ladder is not needed for access. Typically the boxes are located near the associated temperature control panel.

If the fire alarm system is connected to a MOSCAD panel for transmission of alarm, supervisory, and trouble signals to DPSS, program the duct detectors as supervisory rather than alarm devices. Duct detectors shall only alarm the building if the fire alarm system is not connected to MOSCAD.

Duct smoke detectors shall be installed in the return and supply ducts of air handling units of more than 2000 cfm. NFPA 101 references NFPA 90A - Standard for the Installation of Air

Conditioning and Ventilation Systems, which requires duct smoke detectors to be installed in the supply duct. MBC references the Michigan Mechanical Code which requires duct smoke detectors to be installed in the return duct.

Duct smoke detectors shall be mounted to the outside wall of the duct with a rigidly mounted sampling tube protruding into the duct. Installing area smoke detectors inside the duct work in lieu of duct smoke detectors with sampling tubes is not acceptable.

Sampling tubes of duct smoke detectors shall not be installed in the ducts until after the ducts have been cleaned and the air handling unit filters have been changed.

Heat Detectors
Careful consideration shall be given to providing heat detectors, rather than smoke detectors, in high humidity locations such as bathrooms with showers and laundry areas, and/or in areas with occasional smoke present such as kitchens.

Notification Appliances:
In general, provide Class B notification appliance circuits except where an applicable code requires a different circuit class.

Combine horns or speakers with strobes when both are required at the same location.

Audible Notification Appliances
Audible notification appliances shall produce a three-pulse temporal pattern evacuation tone. If an emergency voice/alarm communication system is provided, the audible evacuation alarm signal shall produce three-pulse temporal pattern evacuation tone followed by a pre-selected voice evacuation message. The alarm tones and voice evacuation messages shall alternate until they are silenced.

Specify speakers and horns with multiple adjustable taps. Audible notification appliances shall be capable of being adjusted to increase the sound level if needed based on final inspection and testing. Spare system and circuit capacities requirements shall be maintained.

The sound level in sleeping rooms shall be not less than 75 dBA measured 3'-0" from the most remote wall with a square wave low level frequency of 520 Hz.

Do not provide horns or speakers in elevator machine rooms or in elevator cars.

Do not provide horns or speakers in exit stair enclosures unless the building is equipped with an emergency voice/alarm communication system or a mass notification system. Emergency voice/alarm communication system exit stair enclosure speakers shall be on a separate paging zone.

High Rise buildings, Educational Group E buildings, and Assembly Group A buildings having more than 1000 occupants and/or other buildings as noted in the BOD, shall have emergency voice/alarm communication systems throughout the building.

Provide a speaker in each sleeping room and a sounder base in each sleeping room smoke detector. The speaker shall provide the general alarm and the sounder base shall alarm upon

smoke within the room.

In rodent rooms, the sound shall be a three-pulse temporal pattern with a peak frequency below 500 Hz.

Note the following issues when designing audible notification systems:

- Assume that all interior doors will be closed.
- Office system furniture with sound dampening partitions may be installed.
- The ambient sound level in each space, the distance from the nearest notification appliance to each space, and the sound attenuation of the intervening walls and doors.
- Many laboratories and mechanical rooms have high average ambient sound levels.
- Alarm sound level measurements will be taken during fire alarm system testing, and audible appliances may have to be added if the alarm sound levels do not meet Code.

Visual Notification Appliances

Provide visual notification appliances in all common and public spaces as required by the applicable codes. Common and public spaces are defined as corridors, toilet rooms, auditoriums, classrooms, single or multi-person offices 200 square feet or larger*, conference rooms, and laboratories. Also provide visual notification appliances in the following locations:

- Elevator machine rooms
- Mechanical rooms and other areas that have an average ambient noise level exceeding 95 dBA
- Sleeping rooms and in living spaces of suites or apartments

Do not provide visual notification appliances in the following locations:

- Exit stair enclosures
- Elevator cars
- Single or multi-person offices less than 200 square feet*
- Closets and coat rooms
- Electrical closets
- Mechanical pipe chases
- Crawl spaces
- Small bathrooms within classrooms
- Janitor closets
- Storage rooms less than 200 square feet
- Unoccupied spaces
- Animal rooms

* *For UM Hospital and Health Center facilities, verify with design manager*

Specify strobes with multiple adjustable taps. Visual notification appliances shall be capable of being adjusted to increase the candela level if needed based on final inspection and testing. Spare system and circuit capacities requirements shall be maintained.

Size and locate visible notification appliances in strict accordance with the "Visible Characteristics, Public Mode" Section of NFPA 72. Select the strobe candela outputs in accordance with the spacing tables, and indicate their outputs on the plan drawings for all strobes. Locate strobes at the halfway distance on the longest walls as shown in the NFPA 72 figures and

appendices. Do not install strobes near room corners without increasing their candela ratings appropriately.

On all buildings on the Ann Arbor Campuses, install a NEMA 3R, 110 candela strobe and speaker outside above the location of the 'Siamese' (fire hose) fire department connection.

Monitor and Control Modules:

Provide individually addressable monitor and control modules for interface with other building life safety systems. Monitor and control modules shall use Class B circuits. Control modules shall be within 3'-0 of the associated device.

Provide FACP modules and individual modules for control of other systems and equipment. These systems and functions include but are not limited to the following:

- Shut down of ventilation systems via normally closed control module contacts after an alarm report from associated duct smoke detectors.
- Control module output contacts (minimum of three) for each elevator to control elevator recall (designated and alternate floors) and in-cab warning signaling. See Standard Details 28310010, 28310011, & 28310012.
- Control, via normally closed control module contacts, electrified door locking hardware, magnetic door locks, door hold-opens, and to disable electrically operated door proximity sensors.
- Interfacing with MOSCAD system for relaying status of supervisory signals of Emergency Responder Radio Systems (ERRC).

Provide FACP modules and individual modules for monitoring the status of other systems and equipment. These systems and functions include but are not limited to the following:

- Fire protection system (see additional requirements below) and other safety protection systems.
- Fire Pumps - Supervisory signals; Pump running, Loss of ac power, Phase reversal, Controller connected to alternate source, Selector switch not in auto, Control panel trouble.
- ERRC - Supervisory signals; Antenna malfunction, Signal booster failure, Loss of normal ac power, Failure of battery charger, Low-battery capacity.
- Pre-action fire protection systems - Monitor each zone of the pre-action system in addition to general system alarm, supervisory, and trouble signals.

In a building with a sprinkler system, provide water flow switches to detect sprinkler activation and valve tamper switches at all shut off valves (inside and outside the building and also including elevator machine room sprinkler shut off valves). FACP descriptors shall specifically note sprinkler system coverage area of the associated water flows, and the locations of the tamper switches.

Emergency Responder Radio Coverage (ERRC):

Refer to Design Guideline DG 273523 for ERRC design and installation requirements.

A hard wired fire department communication system shall not be specified in lieu of, or in addition to an ERRC system.

Mass Notification System:

If noted in the Owner's Project Requirements, provide necessary equipment, initiating devices, notification appliances, conduit, wiring, programming, and appurtenances to the base fire alarm system scope of work to incorporate building-wide mass notification into the fire alarm system. The system shall be specified as an Add Alternate so associated additional costs can be quantified.

Provide speakers for audible notification appliances in lieu of horns if the base fire alarm system scope of work specifies horns. Provide sufficient speakers to meet NFPA 72 voice intelligibility requirements.

In the main fire alarm control panel and in each remote fire alarm annunciator panel provide a minimum of 8 pushbuttons to initiate the alert strobe lights and the building-wide evacuation or alert tone followed by a unique pre-recorded voice message.

Provide a Local Operating Console (LOC) cabinet with microphone for use by Facility Manager. Locate the LOC in a secure location acceptable to DPSS.

Alarm and supervisory signals shall be sent through MOSCAD (or other supervised system acceptable to AHJ) to DPSS.

Provide system interconnecting raceways, wiring, and routing in compliance with the system "survivability" requirements contained in NFPA 72.

MOSCAD (Central Station Monitoring):

DPSS remotely monitors essentially all of the fire alarm systems on the Ann Arbor campuses. The connection from the building to DPSS is by the University MOSCAD (Motorola SCADA) system. This system performs the functions of a Central Station Monitoring facility and the DPSS office is considered to be a constantly attended location.

In offsite locations and/or when noted in the BOD, the fire alarm system shall be connected by digital dialer to a listed Central Station Monitoring facility which in an emergency will notify the authorities and appropriate emergency personnel in that jurisdiction.

The FACP and fire pump controller shall have output contacts that will interconnect with the MOSCAD remote transmitting unit (RTU). These contacts, in their normal state, shall be closed, and in the 'alarm' state they shall open. Provide form "C" contacts, plus needed conduit and wiring to the MOSCAD alarm junction box (also referred to as interface junction box) for signal inputs. Signal inputs shall include, but are not limited to, the following:

- FACP - Alarm
- FACP - Supervisory
- FACP - Supervisory Maintenance Alert
- FACP - Trouble
- Fire Pump - Pump Running
- Fire Pump - Supervisory
- ERRC - Signal booster supervisory, Power supply supervisory

The MOSCAD RTU, RTU box, alarm junction box, and antenna equipment will be furnished by

the University. All wiring in the RTU, between the RTU and alarm junction box, as well as all of the programming and work needed at DPSS will be by the University. Wiring to the antenna shall be furnished by the University and installed by the contractor. (*Note to U of M Design Manager, include $8,000 in the project budget to pay for these U of M provided equipment and services).* Contractor shall furnish and install all conduits and install RTU box and alarm junction box furnished by the University. Include Detail 28160015 for installation details.

Note that the MOSCAD system is connected by radio to DPSS on Kipke Drive on south campus. The MOSCAD system is often used to transmit other alarm messages to that central security office. These other alarms might include security, and/or monitoring points of critical systems.

Installation and Testing:

Fire alarm system shall be connected, programmed, tested, and certified, by NICET, Level 2 (minimum) certified fire alarm persons.

Fire alarm system wiring shall be segregated from other system wiring. Wiring shall be installed in raceways, cable trays, or in J-hooks. In mechanical rooms, unfinished spaces and other areas wiring may be subject to physical damage wiring below 10'-0 shall be installed in conduit.

Fire alarm system control panels, equipment, and other components shall not be painted. Conduit and/or couplings, junction boxes, and covers, however, shall be painted red.

Require the contractor to fully test the system prior to arranging witness testing by the University. Witness testing shall include the contractor, U-M Fire Marshal, U-M Electrical Inspector, U-M Fire Protection Shop, and Commissioning Authority. On classroom, in-patient medical, and Housing projects, the contractor shall also be required to support a system test by the Inspector from the Michigan Bureau of Fire Services. Provide the University Project Manager and Commissioning Authority with test reports.

Training on fire alarm system operation and programming shall be provided as part of the system. The training shall consist of two training programs. One program shall be for the U-M Fire Protection and Radio Shop personnel and the second shall be for the Building Facility Management, FSS, and DPSS.

The fire alarm contractor shall provide the University, on CD, a complete 'Windows System' compatible copy of the operational and application programs. This electronic documentation shall reflect the system as configured after the certification testing is completed and accepted.

OUT TO BID

DESIGN GUIDELINES

1.0 CODES AND REGULATORY AGENCIES

2.0 PROJECT PROCEDURES

3.0 SUSTAINABILITY

4.0 SPECIAL INSTRUCTIONS TO DESIGNERS

5.0 SPECIAL BUILDING AREAS

6.0 TECHNICAL REQUIREMENTS

6.1 ARCHITECTURAL

6.2 MECHANICAL

6.3 ELECTRICAL

6.4 SITE/CIVIL

7.0 MASTER SPECIFICATIONS

8.0 PREFERRED MANUFACTURERS LIST

9.0 STANDARD DETAILS AND SCHEDULES

10.0 CHANGES TO DESIGN GUIDELINES

6.4 SITE/CIVIL

31 EARTHWORK	Last Update	Previous Version	Replaces
310000 Sitework	January 2017	November 2010	020000 Sitework
312500 Soil Erosion and Sedimentation Control	January 2017	November 2010	02215 Soil Erosion and Sedimentation Control
32 EXTERIOR IMPROVEMENTS	**Last Update**	**Previous Version**	**Replaces**
321000 Walks, Roads and Parking Paving	January 2017	November 2010	02510 Walks, Roads and Parking Paving
328400 Automatic Lawn Irrigation	November 2010	April 1995	02810 Automatic Lawn Irrigation
33 UTILITIES	**Last Update**	**Previous Version**	**Replaces**
331000 Water Supply Systems	April 1995		02665 Water Supply Systems

© 2018 Regents of the University of Michigan
Design by Michigan Creative

326 East Hoover, Ann Arbor, MI 48109-1002
Phone: (734) 763-3020
Contact Us

DESIGN GUIDELINE
310000 SITE REQUIREMENTS

General

In general, follow the guidelines below when designing and specifying sitework. Unless specifically indicated otherwise, these guidelines are not intended to restrict or replace professional judgment.

Related Sections

U-M Design Guidelines
6.0 DG013639 Tree Preservation
6.0 DG312500 Soil Erosion and Sedimentation Control
6.0 DG321000 Walks, Roads and Parking Paving
6.0 DG328400 Irrigation
5.3 Loading Docks

Related Documents
Campus Planning Site Furnishings Standards Manual
University of Michigan Soil Erosion & Sedimentation Control Procedures
University of Michigan Storm Water Management Procedure

Design Requirements

All work within City of Ann Arbor street right-of ways shall be in accordance with the City of Ann Arbor's standards and requirements. Permanent construction within City of Ann Arbor right-of-ways requires licensing by the City. Permanent construction on land not owned by the University may require an easement. Early in design, notify the University Design Manager of any such construction so that discussions with the City and/or other affected property owners can be initiated. Coordinate communications with the City through the University Design Manager.

All water main and sewer connections to City of Ann Arbor facilities shall be in accordance with the City of Ann Arbor's Standards and Requirements. Coordinate communication with the City Engineer regarding interpretation of these Standards and Requirements through the University Design Manager.

All materials, equipment and construction for bituminous and concrete pavements shall be in accordance with the latest version of the Michigan Department of Transportation Standard Specifications for Construction.

Granular materials shall be a minimum of MDOT Class II, compacted to 98% of an ASTM 1557 value.

All concrete shall be 4,000 pounds per square inch minimum compressive strength at 28 days, and consist of air entrained Portland cement with a total air content of not less than 4 percent, but not more than 7 percent. Cement content shall be a minimum of 6 sacks per cubic yard. The slump shall be not more than 4 inches, nor less than l-l/2 inches as determined by the slump cone test, ASTM C-l43. All flatwork concrete shall be reinforced with polypropylene fibrillated fibers at a volume of 1.5 pounds per cubic yard.

Backfill for all utility trenches that run under, or within 3 feet of, existing and proposed concrete or asphalt surfaces shall be granular material as specified in (4) above.

All regular sidewalks should be 8 feet wide, and all steps and stairs eliminated if at all possible to facilitate barrier free access, cleaning and snow removal.

Paved areas at building entrances should be adequate to accommodate refuse containers.

The potential for installing an automatic lawn irrigation system should be discussed with U-M Grounds Services, coordinated through the University Design Manager, early in the project, so that plumbing for the meter, back-flow equipment and a supply line to the outside of the building can be included in Mechanical work. See Design Guideline 328400 Irrigation for additional information.

Wall hydrants to receive a 1-inch hose should be included in the Mechanical work even if an automatic lawn irrigation system is planned for the project.

Storm water management strategies should be included early in the design process. The A/E should consult with the University Design Manager and Campus Planning to determine the appropriate measures to reduce the amount of runoff. All projects are encouraged to do as much as possible to minimize impacts from storm water runoff. At a minimum, all projects with earth disturbance >1 acres are required to meet the storm water management post-construction requirements. Refer to the storm water management procedure for complete information.

Site Elements

The A/E shall identify on the existing conditions site plan and on the demolition plan all site elements that will be impacted by construction, to include but not limited to:

- Free-standing building ID signs
- Plaques on the grounds or on the building
- Public art works and artifacts
- Kiosks used for posting flyers
- SORC posting boards (triangular boards used for posters)
- Memorial benches
- Memorial trees

The A/E and the University Design Manager will work with Campus Planning to determine the appropriate disposition of these site elements. It will be the responsibility of the project to relocate, replace, or restore the elements per the instructions of Campus Planning. The A/E will stipulate in the design documents the approved disposition/relocation/restoration of all relevant site elements. Refer to Campus Planning Site Furnishings Standards Manual for more information.

Refuse Removal

The A/E shall stipulate in the Design Documents that the Contractor shall remove all building materials and debris from the job site, and sub-grade the landscape areas to 4 inches below finish grade. Refuse removal during the construction phase shall be as frequent as necessary to prevent windblown debris. Unsightly pileup is also prohibited.

The construction site and valuable landscape plants shall be fenced to control Contractor parking and material storage.

Existing trees and other landscape plant materials within and outside the contract limits must be protected from soil compaction and breakage. See Design Guideline 013639 Tree Preservation .

Landscape plants and materials to be removed must be approved by the University Design Manager.

DESIGN GUIDELINE 312500
EROSION AND SEDIMENTATION CONTROL

Scope

In general, follow the guidelines below when designing and specifying soil erosion and sedimentation control. Unless specifically indicated otherwise, these guidelines are not intended to restrict or replace professional judgment.

Related Sections

Design Guidelines

6.0 DG013639 Tree Preservation
6.0 DG310000 Site Requirements
6.0 DG321000 Walks, Roads and Parking Paving
3.1 Sustainable Design and LEED Requirements
4.4.1 Landscape Materials

Related Documents

LEED Reference Guide for Green Building Design and Construction
Southeast Michigan Council of Governments Low Impact Development Manual
University of Michigan Soil Erosion & Sedimentation Control Procedures

Summary

Soil erosion and sedimentation control (SESC) procedures are activities which are regulated by the State of Michigan on all U-M project sites that implement an earth change activity.

All earth changes of one acre or more or within 500 feet of Waters of the State require a plan that is in compliance with the Soil Erosion and Sedimentation Control Part 91 of Natural Resources and Environmental Protection Act Public Acts 451 of 1994, as amended. All other projects must provide a site plan and a description of the methods being employed to control run off and the resulting sedimentation which would otherwise enter the existing storm water system.

During the design phase of the Project, the U-M Design Manager, with the assistance of the A/E, will submit to U-M Department of Environment, Health and Safety (EHS) a Project Notification Form.

Definition

"Waters of the State" includes the Great Lakes and their connecting waters, lakes, ponds, rivers and streams, which may or may not be serving as a county drain as defined by the drain code; or

any other body of water that has definite banks, a bed and visible evidence of a continued flow or continued occurrence of water and wetlands regulated under Part 303 of Public Acts 451 of 1994.

Design Requirements

The A/E shall prepare the soil erosion and sedimentation control plans and specifications. Implementation of the soil erosion and sedimentation control plan including required maintenance during construction and final removal as directed in the plans is the responsibility of the Contractor.

U-M EHS is designated as an "Authorized Public Agency" and is responsible for administration of Part 91 of Act 451. The proposed plans for soil erosion and sedimentation control must be submitted for review and approval to the U-M EHS and Campus Planning, prior to the beginning of any site work. Coordinate with the Design Manager.

Developing and Implementing the Plan

Governing Principles for All UM Sites Involving an Earth Change Activity

The following principles should be considered before construction, when developing a soil erosion and sedimentation control plan:

- Integrate the overall construction design and activities to fit the existing physical and vegetative features of the site.
- Specify the staging of construction and stabilization activities to minimize the area and duration of disturbance. This can be done by limiting the areas of heavy equipment access and staging/storage of materials; protecting high quality and environmentally sensitive areas; and avoiding excessive and unnecessary clearing and stockpiling of topsoil.
- Protect natural/intermittent streams and swales and maintain as a natural habitat/campus amenity by identifying and mapping natural drainage features and directing surface drainage to the natural features.
- Reduce impervious surfaces by minimizing the dimension or area required for roads, drives, walks and parking.
- Specify control measures that will minimize erosion as a first line of defense, such as: seeding & mulching, preserving vegetative buffers, surface roughening, grade stabilization structures, check dams and controlling wind erosion by covering stockpiles or wetting exposed soils.
- Include perimeter protection controls that will prevent off-site sedimentation. Ex: perimeter barriers (silt fence), vegetative filter strips, anti-tracking pads, storm drain inlet protection, and sediment basins. Sedimentation control should not be used as a substitute for erosion control, but rather in conjunction with erosion control.

- Specify that a sweeper shall be employed to remove sediment tracked onto the pavement at least on a daily basis. Include a requirement that sweepers must be used more frequently, as needed, based on site conditions.
- Require the Contractor to establish an inspection and maintenance schedule.

Include as a minimum the following information for sites one acre or more in size or within 500 feet of Waters of the State:

- A map or maps at a scale of not more than 200 feet = 1 inch. Map shall include a legal description and site location, sketch that includes the proximity of any proposed earth change to lakes, streams or both; predominant land features including lakes, streams and wetlands; and contour intervals or slope information.
- A soils survey or a written description of the soil types of the exposed land area contemplated for the earth change.
- Description and location of physical limits of each proposed earth change.
- Description and location of existing and proposed on-site drainage and dewatering facilities.
- Timing and sequence of each proposed earth change.
- Description and location of all temporary and permanent erosion and sedimentation control measures, including timing on installation and removal of temporary measures.
- Program and schedule for maintaining all control measures.

A design and review checklist containing these required plan items is available

Recommended control measures for all U-M sites involving earth change activity:

The following SESC measures need to be included in all plans. Other measures may also be required based on specific site conditions and projects.

- Provide inlet protection on all adjacent and down gradient storm water inlets, catch basins, and manholes. This may be accomplished using filter fabric, regular or high flow silt sacks, or other control measures.
- Install an entrance anti-tracking pad with a minimum of 50 feet in length. A geotextile filter fabric should be placed under 6 inches of limestone aggregate.
- Install perimeter barriers adjacent to and down gradient of the disturbed area.
- Place stockpiles and other spoil piles away from the drainage system to minimize sediment transport. Keep as few stockpiles as possible during the course of the project. If the stockpile and/or spoil pile must remain onsite overnight, or if the weather conditions indicate the chance for precipitation protect the pile from erosion.
- Provide dust control.
- Provide sweeping to remove any track-out.

- Specify biodegradeable products for erosion control blankets.

Construction sequence for all U-M sites involving earth change activity:

Include a construction sequence in the plans and/or specifications. The following construction sequence is recommended:

- Install all temporary and permanent erosion and sediment control measures in accordance with the approved plan and special permit conditions.
- U-M EHS will inspect all projects at least weekly and after every significant storm events to evaluate the effectiveness of the control measures.
- Per plan and per U-M EHS maintain all temporary and permanent control measures daily and as needed based on the site inspections.
- Complete permanent soil erosion control measures for all slopes, channels, ditches, or any disturbed land area within 5 calendar days after final grading or the final earth change has been completed.
- Remove all temporary control measures after permanent soil erosion control measures are in place and the area is stabilized.
- Notify the Project Manager for a final inspection when the project is completed.

DESIGN GUIDELINE 321000
WALKS, ROADS AND PARKING PAVING

Scope

Scope: Paving for walks, roads and parking.

Related Sections

U-M Design Guidelines
6.0 DG310000 Site Requirements
6.0 DG312500 Soil Erosion and Sedimentation Control
3.1 Sustainable Design and LEED Requirements

Related Documents
Southeast Michigan Council of Governments Low Impact Development Manual
LEED Reference Guide for Green Building Design and Construction

Design Requirements

All work within City of Ann Arbor street right-of ways shall be in accordance with the current version of the City's standards and requirements. During design, the A/E shall submit plans and specifications to the City for review and approval. This process should be completed prior to the issuance of 100% CD's.

All materials, equipment and construction for bituminous and concrete pavements shall be in accordance with the current version of the Michigan Department of Transportation Standard Specifications for Construction. No welded wire fabric shall be used in sidewalk construction.

In order to promote infiltration and an even distribution of storm water flow, impervious surfaces should be minimized. The A/E should evaluate the site for potential pervious pavement/infiltration opportunities early in the design process. Consult with the U-M Design Manager and Campus Planning to determine the appropriate paving materials for each project.

Pervious Pavement Installation Requirements

Pervious pavement should not be located on top of recent fill or compacted areas, unless adequate under drainage is provided. Traffic type, pavement use, and type of loading should be considered in design, for example, dumpsters should not be located on porous pavement due to concentrated point load while emptying the dumpster.

Properly sized infiltration beds and under drains in locations with poorly drained soils should be incorporated. All porous paving installations should include an overflow system. This could consist of bleed-out pipes connected to sumps or outfalls into an unconventional or conventional storm water system.

Utilize perforated pipes along the bottom of the filter bed to evenly distribute runoff. Infiltration areas should be located within the immediate project areas in order to control runoff at its source. Install compatible plantings adjacent to the pervious pavement that do not block the porosity.

Soil type (infiltration rate) and amount of water stored will determine the depth of the pervious pavement system. Frost depth should also be considered and the minimum filtration bed depth should increase accordingly.

"Vacuuming" the pavement should occur annually in order to keep the porous system operating at its potential.

Systems

- Porous concrete: Pervious pavement should be underlaid with a stone sub-base. Installation methods and outcomes should be carefully observed where grading requirements are stringent.

- Porous asphalt: Pervious asphalt should be placed directly on the stone sub-base in a single layer and rolled into a finished surface. This system is best used for parking lots, walkways, and in natural areas.

- Porous concrete unit pavers/paver blocks: This system is best used in high-visibility areas such as courtyards and plazas, as well as sites containing heavy loads, such as parking lots, service areas and low-speed drives. Accessible ramps within porous paver areas should use standard concrete to achieve and maintain the required grade.

Impervious Concrete Installation Requirements

Concrete shall consist of air entrained Portland Cement with a total air content of not less than 4 percent but not more than 7 percent. Cement content shall be a minimum of 6 sacks per cubic yard. Concrete shall contain polypropylene fibrillated fibers at a volume of 1.5 pounds per cubic yard

All regular sidewalks shall be 8 feet wide and 8 inches thick, and all steps and stairs eliminated if at all possible to facilitate cleaning and snow removal.

Paved areas at building entrances shall be adequate to accommodate refuse containers.

Where possible, impervious surface drainage should be directed to water receiving landscape areas such as lawns and planted areas.

Quality Acceptance Test

Minimum concrete 28 day compressive strength shall be 4000 psi.

Slump shall be not more than 4 inches, or less than 1 1/2 inches, as determined by the slump cone test specified in ASTM C-143.

Cleanup Requirements

Concrete and asphalt work (including cutting, grinding, drilling, and hyro-demolition) washout cannot be discharged into storm drains, catch basins or to the sanitary sewer system. Direct the Contractor to utilize proper disposal and washout practices and to perform washing of concrete trucks in designated areas or offsite.

DESIGN GUIDELINE 328400
IRRIGATION

Scope

Scope: Designing and specifying irrigation.

Related Sections

U-M Design Guidelines
6.0 DG310000 Site Requirements
6.0 DG312500 Soil Erosion and Sedimentation Control
DG 3.1 Sustainable Design and LEED Requirements
SID 4.4.1 Landscape Materials

Related Documents
LEED Reference Guide for Green Building Design and Construction
University Planner's Office Stormwater Best Management Practices

Summary

Careful consideration should be given to the selection of plant materials that require less water to sustain their life. In addition, the designer should consider context when preparing landscape plans to ensure an investment in an irrigation system is warranted and if so, that an appropriate level of care will be provided. For example, a landscape within a high image area may be more richly planted than an area that is seldom viewed by the public. U-M Grounds Services maintains a map of maintenance zones that can serve as a guide for where irrigation (or intensity thereof) is appropriate to include (http://www.plantops.umich.edu/grounds/service_levels/priority/).

When irrigation is warranted, the U-M is committed to installing water efficient irrigation systems with metering equipment and other high–efficiency irrigation technologies to reduce potable water consumption whenever possible.

Design Requirements

The A/E should consider efficient technologies including Maxicom or similar irrigation management systems.

In addition to irrigation design, the A/E should provide plumbing, electrical and mechanical systems design for associated irrigation components within the building envelope. Separate meters for irrigation measurement should also be included.

The A/E should consult with the U-M Grounds Services for site specific irrigation needs. Coordinate with the Design Manager.

DESIGN GUIDELINE 331000
WATER SUPPLY SYSTEMS

General

The City of Ann Arbor's local plumbing codes supplement the State and National codes. Consult the City Engineer through the University Design Manager for specific interpretation.

The purchase of the water meter is the responsibility of the University; however, installation will be by the City. The Contractor is responsible for obtaining all necessary permits. The water use and sewer use fees for the water meter will be the responsibility of the University.

Related Sections

6.0 DG 230000 - Basic Mechanical Requirements
6.0 DG 221113 – Basic Piping Materials and Methods

Material Requirements

Materials from the City main to the entrance into the building shall meet City of Ann Arbor requirements.

Piping inside the building downstream of the City water meter should be copper. Brass nipple and/or dielectric flanges shall be used between dissimilar metals. Dielectric unions are not acceptable.

Installation Requirements

An approved backflow preventer shall be installed at the point of entry in new buildings, and at the point of take-off of new piping in renovation projects whenever the water is to be used for non potable purposes. See Section DG220010. Backflow preventers shall be tested and certified upon installation of unit.

All fixtures connected to purified water systems shall contain approved vacuum breakers.

The A/E shall consult with the University Design Manager to determine if the existing building distribution system is sufficiently large to support the new demands.

All water pipes should be pitched to facilitate complete drainage.

Water hammer arresters should be installed at all fixture groups.

Newly installed pipes should be cleaned and chlorinated. The method used should be as set forth in AWWA Standard Specifications, latest edition, including all amendments thereto. The treatment should consist of a solution of not less than 50 ppm of available chlorine (liquid chlorine or sodium

hypo chloride). After sterilization the system should be flushed with clean water until the chlorine residual is not greater than 0.2 ppm.

The high oxygen content of Ann Arbor water should be compensated for. One acceptable method is treating with sodium silicate prior to occupancy.

System must pass inspection by City of Ann Arbor.

OUT TO BID

DESIGN GUIDELINES

1.0 CODES AND REGULATORY AGENCIES

2.0 PROJECT PROCEDURES

3.0 SUSTAINABILITY

4.0 SPECIAL INSTRUCTIONS TO DESIGNERS

5.0 SPECIAL BUILDING AREAS

6.0 TECHNICAL REQUIREMENTS

7.0 MASTER SPECIFICATIONS

7.1 ARCHITECTURAL

7.2 MECHANICAL

7.3 ELECTRICAL

7.4 SITE/CIVIL

8.0 PREFERRED MANUFACTURERS LIST

9.0 STANDARD DETAILS AND SCHEDULES

10.0 CHANGES TO DESIGN GUIDELINES

7.0 MASTER SPECIFICATIONS

This section of the U-M Design Guidelines Website contains guide Master Specifications for the design and construction of facilities at the University of Michigan.The U-M Master Specifications were developed by Architecture and Engineering, for projects designed by our in-house design staff. They are maintained by roughly the same group that maintains the Design Guidelines Technical Sections. At this time we allow A/Es to use their own master specification, but strongly encourage them to use our Master Specification as a guide. Certain Design Guideline Technical Sections require that a related U-M Master Specification section be used as the basis for the A/Es project specific specification. In all cases when U-M Master Specifications are used they must be edited as required to be made project specific. The Master Specifications include extensive hidden notes to the designer, which should be deleted prior to issuing for bid.The Master Specification is divided by CSI Division. Most sections are available in both Acrobat (pdf) and Word (doc) format.

7.1 Architectural

7.2 Mechanical

7.3 Electrical

7.4 Site/Civil

© 2018 Regents of the University of Michigan
Design by Michigan Creative

326 East Hoover, Ann Arbor, MI 48109-1002
Phone: (734) 763-3020
Contact Us

OUT TO BID

DESIGN GUIDELINES

1.0 CODES AND REGULATORY AGENCIES

2.0 PROJECT PROCEDURES

3.0 SUSTAINABILITY

4.0 SPECIAL INSTRUCTIONS TO DESIGNERS

5.0 SPECIAL BUILDING AREAS

6.0 TECHNICAL REQUIREMENTS

7.0 MASTER SPECIFICATIONS

7.1 ARCHITECTURAL

7.2 MECHANICAL

7.3 ELECTRICAL

7.4 SITE/CIVIL

8.0 PREFERRED MANUFACTURERS LIST

9.0 STANDARD DETAILS AND SCHEDULES

10.0 CHANGES TO DESIGN GUIDELINES

7.1 ARCHITECTURAL

		Last Revision	Replaces Section
Division 01 General Requirements 011000 Summary	W	December 2016	Division 01 01100
011400 Work Restrictions			01140
012100 Allowances			01210
012200 Unit Prices			01270
012300 Alternates			01230
013100 Project Management And Coordination			01310
013200 Construction Progress Documentation			01320
013300 Submittal Procedures			01330
013500 Special Procedures For BFS Projects			01350
014200 References			01420
015000 Temporary Facilities And Controls			01500
015719 Construction Air Quality			01510
016000 Product Requirements			
017300 Execution			
017329 Cutting And Patching			01731
017420 Construction and Demolition Waste Tracking			
017700 Closeout Procedures			01770
017823 Operation And Maintenance Manuals			01782
019100 Project Commissioning			01715
Division 02 Existing Conditions			
024119 Selective Demolition	W	August 2017	02070
028110 Regulated Construction Waste Remediation	W	August 2017	13288
028213 Asbestos Remediation	W	January 2018	13280

BUILDING COMMISSIONING

CONTRACTS & AGREEMENTS

CONTRACTOR RESOURCES

OTHER LINKS

028214 Asbestos Remediation – Floor Tile and Mastic	W	January 2018	13281
028215 Asbestos Remediation – Roofing Material	W	January 2018	13282
028300 Lead Remediation	W	August 2017	13285
028333 Lead Remediation – Renovation, Repair and Painting in Child-Occupied Facilities and Target Housing	W	August 2017	13286
028400 PCB Remediation	W	August 2017	13287
Division 03 Concrete			
033053 Miscellaneous Cast-In-Place Concrete	W	July 2015	03301
035416 Hydraulic Cement Underlayment	W	July 2015	03532
Division 04 Masonry			
042000 Unit Masonry	W	December 2012	04810
042010 Unit Masonry Assemblies (Limited Applications)	W	December 2017	04811
Division 05 Metals			
051200 Structural Steel Framing	W	December 2012	05120
053100 Steel Decking	W	December 2012	05310
055000 Metal Fabrications	W	December 2012	05500
055800 Formed-Metal Fabrications	W	December 2012	05580
Division 06 W oods, Plastics and Composites			
061000 Rough Carpentry	W	December 2012	06100
064023 Interior Architectural Woodwork	W	December 2012	06400
Division 07 Thermal and Moisture Protection			
075316 Chlorosulfonate-Polyethylene (CSPE) Roofing	W	December 2012	07532
075323 Ethylene-Propylene-Diene-Monomer (EPDM) Roofing	W	December 2012	07531
078413 Penetration Firestopping	W	December 2012	07841
079200 Joint Sealants	W	December 2012	07920
Division 08 Openings			
081113 Hollow Metal Doors and Frames	W	December 2012	08110
081416 Flush Wood Doors	W	December 2012	08211
083113 Access Doors and Frames	W	May 2014	08305
083313 Coiling Counter Doors	W	December 2012	08336
084113 Aluminum-Framed Entrances and Storefronts	W	May 2013	08410
084413 Glazed Aluminum Curtain Walls	W	March 2013	08911
085113 Aluminum Windows	W	December 2012	08520
087100 Door Hardware	W	November 2017	08710
088000 Glazing	W	December 2012	08800
088010 Glazing (Interior Applications)	W	December 2012	08805
089000 Louvers and Vents	W	December 2012	10200

Division 09 Finishes			
092116 Gypsum Board Assemblies		December 2017	09255
092300 Gypsum Plastering		December 2012	09210
093000 Tiling		December 2012	09310
093033 Stone Tiling		December 2012	09385
095100 Acoustical Ceilings		September 2016	09510
096466 Wood Athletic Flooring		September 2016	09644
096500 Resilient Flooring		September 2016	09650
096723 Resinous Flooring		September 2016	09671
096813 Tile Carpeting		September 2016	
096816 Sheet Carpeting		September 2016	09680
098433 Sound Absorbing Wall Units		September 2016	09841
099100 Painting		December 2017	09900
099110 Electrostatically Applied Coating		December 2012	09925
099310 Wood Floor Finish		September 2016	09927
Division 10 Specialties			
101100 Visual Display Units		September 2016	10100
101400 Signage		December 2012	10425
102113 Toilet Compartments		September 2016	10155
102213 Wire Mesh Partitions		December 2012	10605
102239 Folding Panel Partitions		September 2016	10651
102800 Toilet and Bath Accessories		September 2017	10801
104400 Fire Protection Specialties		June 2015	10520
105113 Metal Lockers		December 2012	10505
Division 1 1 Equipment			
115213 Projection Screens		December 2012	11132
115300 Laboratory Equipment		December 2012	11615
115313 Laboratory Fume Hoods		December 2013	11610
115314 Fume Hood Refurbishment		December 2012	11611
Division 12 Furnishings			
122000 Window Treatment		May 2013	12515
122200 Curtains and Drapes		December 2012	12490

123553 Laboratory Casework		May 2013	12345
124600 Furnishing Accessories		December 2012	12575
124813 Entrance Floor Mats and Frames		December 2012	12690
Division 13 Special Construction			
132100 Controlled Environment Rooms		May 2013	13036
Division 14 Conveying Equipment			
142123 Electric Traction Elevator		January 2015	14210
142423 Hydraulic Elevator		January 2015	14240

© 2018 Regents of the University of Michigan
Design by Michigan Creative
326 East Hoover, Ann Arbor, MI 48109-1002
Phone: (734) 763-3020
Contact Us

UNIVERSITY OF MICHIGAN
ARCHITECTURE, ENGINEERING AND CONSTRUCTION

ARCHITECTURE & ENGINEERING
326 East Hoover, Mail Stop B
Ann Arbor, MI 48109-1002
Phone: 734-764-3414
Fax: 734-936-3334

BuildingName
The Description of the Project
P00000000 0000

SPECIFICATION DIVISION 1

NUMBER SECTION DESCRIPTION

DIVISION 01 GENERAL REQUIREMENTS
SECTION 011000 - SUMMARY
SECTION 011400 - WORK RESTRICTIONS
SECTION 012100 - ALLOWANCES
SECTION 012200 - UNIT PRICES
SECTION 012300 - ALTERNATES
SECTION 013100 - PROJECT MANAGEMENT AND COORDINATION
SECTION 013200 - CONSTRUCTION PROGRESS DOCUMENTATION
SECTION 013300 - SUBMITTAL PROCEDURES
SECTION 013500 - SPECIAL PROCEDURES FOR FIRE MARSHAL REVIEW AND INSPECTION
SECTION 014200 - REFERENCES
SECTION 015000 - TEMPORARY FACILITIES AND CONTROLS
SECTION 015719 - CONSTRUCTION AIR QUALITY
SECTION 016000 - PRODUCT REQUIREMENTS
SECTION 017300 - EXECUTION
SECTION 017329 - CUTTING AND PATCHING
SECTION 017420 - CONSTRUCTION AND DEMOLITION WASTE TRACKING
SECTION 017700 - CLOSEOUT PROCEDURES
SECTION 017823 - OPERATION AND MAINTENANCE MANUALS
SECTION 019100 - PROJECT COMMISSIONING

END OF CONTENTS TABLE

015 - DIV 1 UPDATED TO BETTER ALIGN WITH NEW STANDARD GENERAL CONDITIONS AND FRONT END DOCUMENTS. INCORPORATED SOME TOPICS PREVIOUSLY INCLUDED IN SUPPLEMENTAL GENERAL CONDITIONS.

7/2016 – REMOVED 019100 FULL PROJECT CX AND 019110 PROJECT CX FOR SMALL PROJECTS. REPLACED WITH 019100 "PROJECT COMMISSIONING". FROM THIS DATE FORWARD ONLY ONE CX SPEC IS NEEDED FOR ALL TYPES OF COMMISSIONING, BOTH "FULL" AND "REDUCED SCOPE". D.KARLE.

DIVISION 01 GENERAL REQUIREMENTS
SECTION 011000 - SUMMARY

PART 1 - GENERAL

1.1 RELATED DOCUMENTS

A. The Drawings and the general provisions of the Contract, including the current edition of the University of Michigan Standard General Conditions apply to each section of this Project's specifications.

1.2 PROJECT DESCRIPTION

EDIT BELOW TO SUIT PROJECT

A. The Project: Remodel approximately insert sq. ft. of existing insert next or modify laboratory and office space in rooms insert room numbers in the insert name Building on the University of Michigan's insert next or modify Medical Central North South (athletic) Campus in Ann Arbor, Michigan. Major aspects of the work include, but are not limited to:

PLEASE TAKE TIME TO EDIT BELOW TO SUIT PROJECT. THIS LIST SHOULD NOT BE A CONSIDERED A "SCOPE" ARTICLE. IT IS INTENDED TO HELP THE CONTRACTOR GET ORIENTED TO THE PROJECT.

1. Demolition of existing structures as required for new construction.
2. Removal, abatement, and proper disposal of existing asbestos containing materials, lead containing materials, PCB containing materials, and regulated building materials.
3. Construction of new masonry and drywall/metal stud walls and partitions.
4. Interior and exterior doors and hardware.
5. Architectural finishes
6. Laboratory furniture and pre-packaged controlled environmental room.
7. Revision of existing HVAC system, including new fume-hood exhaust system.
8. New plumbing work, including natural gas, vacuum, domestic hot and cold water, purified water piping, and drainage, waste and vent plumbing.
9. Fire protection piping.
10. Electrical lighting and power.
11. Alarm and telecommunications systems.

INCLUDE BELOW ONLY FOR PROJECTS IN BUILDINGS UNDER THE JURISDICTION OF THE STATE OF MICHIGAN BUREAU OF FIRE SERVICES (BFS). FOR A COMPLETE LISTING, REFER TO DESIGN GUIDELINE 1.0 CODES AND REGULATORY AGENCIES.

B. The building in which the project is located is under the jurisdiction of the State of Michigan Bureau of Fire Services (BFS).

INCLUDE BELOW ONLY FOR PROJECTS IN BUILDINGS WITH A BFS COMPARTMENT BUT ARE OUTSIDE OF THAT COMPARTMENT. FOR A COMPLETE

LISTING, REFER TO DESIGN GUIDELINE 1.0 CODES AND REGULATORY AGENCIES

C. The compartment of the building in which the project is located is not under the jurisdiction of the State of Michigan Bureau of Fire Services (BFS). There are compartments in the building that are under the jurisdiction of the State of Michigan Bureau of Fire Services (BFS). Submit fire alarm and fire suppression work to the State of Michigan and request related inspections.

INCLUDE AND EDIT BELOW FOR PHASED CONSTRUCTION

1.3 WORK SEQUENCE

A. Work Sequence (Phasing): Conduct the Project in phases to provide the least possible interference to activities of the Owner's personnel, and to permit the orderly transfer of personnel and equipment to the new facilities.

THE FOLLOWING IS AN EXAMPLE OF PHASING LANGUAGE. MODIFY TO SUIT PROJECT

1. Achieve Substantial Completion (ready for Owner's occupancy) in room 10 before beginning work in room 20; achieve Substantial Completion in room 20 before beginning work in room 30.

B. Notify Owner's Representative 7 calendar days prior to scheduled date of Substantial Completion of each phase of the Project. Before beginning successive phases of Work, comply with the following requirements:

1. Obtain Architect's Certificate of Substantial Completion for the completed phase of Work.
2. Allow 7 calendar days before beginning next phase, to permit Owner to prepare space for use.

INCLUDE BELOW IF WORK UNDER OTHER CONTRACTS WILL BE OCCURING DURING CONTRACT TIME. INCLUDE INFORMATION ON DRAWINGS RELATED TO OTHER CONTRACT WORK (I.E. SHARED STAGING, ACCESS AND DUMPSTER SPACE.)

1.4 WORK UNDER OTHER CONTRACTS

A. During the Contract Time, additional construction work under separate contract will be taking place. Major aspects of work under other contracts are indicated on Drawings. Coordinate construction operations and cooperate with Owner and other contractors to minimize possible conflicts. Contact The University of Michigan Construction Management Department (734) 764-2457 for further information.

1.5 WORK BY OWNER

ALWAYS RETAIN BELOW.

A. Shut-down and restoration of utilities, including plumbing, fire protection (and Owner's implementation of Red Tag Permit system), HVAC, electrical, fire alarm, or other services that require temporary discontinuation and later restoration shall be conducted by Owner's Maintenance personnel. Contractors are not authorized to impair any services. Contact the Maintenance Department through the Owner's Representative.

DELETE BELOW IF NO OTHER CONSTRUCTION WORK BY OWNER.

B. During the Contract Time, additional construction work performed by Owner will be taking place. Major aspects of work under other contracts are indicated on drawings. Coordinate construction operations and cooperate with Owner to minimize possible conflicts.

INCLUDE BELOW WHERE ASBESTOS ABATEMENT WORK IS BEING DONE BY OWNER OR OWNER'S SUB-CONTRACTOR

C. During the Contract Time, Asbestos Abatement Work will be performed by Owner. The Contractor shall coordinate the Work performed by the Owner and Owner's Asbestos Abatement Sub-contractor, if any. Refer to Division 02 Section for information on Abatement Work to be performed by Owner.

INCLUDE BELOW FOR PRE-ORDERED EQUIPMENT

1.6 PRODUCTS ORDERED IN ADVANCE

EDIT SAMPLE LANGUAGE BELOW FOR PRE-ORDERED EQUIPMENT THAT WILL BE INSTALLED BY THE CONTRACTOR.

CONTRACTORS ARE REQUIRED TO PAY USE TAX ON EQUIPMENT PRE-PURCHASED BY THE UNIVERSITY AND INSTALLED BY THE CONTRACTOR. FORM OF PROPOSAL SHOULD NOTE THAT THE PROJECT INCLUDES USE TAX. ALWAYS INCLUDE EQUIPMENT COST BELOW UNLESS IT IS INCLUDED ON THE FORM OF PROPOSAL. THE BIDDERS WILL NEED THIS TO CALCULATE THE 6% USE TAX. COORDINATE WITH AEC PROJECT CONTROLS.

A. Owner has pre-ordered and paid for the products indicated below. Work of this Contract includes unloading, handling, storing, setting, installing and making building service connections. Contractor responsible for payment of State of Michigan use tax on equipment cost listed below.

LIST EQUIPMENT OR MATERIALS AND APPROXIMATE DELIVERY DATES. WHEN PRE-ORDERING MATERIALS, INCLUDE CLEAR DESCRIPTION OF SCOPE OF MATERIALS INCLUDED.

1. Unit substation:
   a. Approximate delivery date:
   b. Equipment Cost:

B. Coordinate exact time and date of delivery with equipment manufacturer.

PART 2 - PRODUCTS (NOT APPLICABLE)

PART 3 - EXECUTION (NOT APPLICABLE)

END OF SECTION 011000

SECTION 011400 - WORK RESTRICTIONS

ADDED LANGUAGE REGARDING TREE PROTECTION (9/04).

PART 1 - GENERAL

1.1 SUMMARY

A. Types of special construction requirements include the following:

EDIT THE LIST BELOW TO SUIT PROJECT. ADDITIONAL POSSIBLITIES INCLUDE CENTRAL SYSTEM DISABLEMENT, SEASON-SPECIFIC CONSTRUCTION, AND DURATION-LIMITED CONSTRUCTION.

1. Use of premises.
2. Security.
3. Parking on U-M property.
4. Scheduling of work.
5. Refrigerant handling.
6. Tunnel projects.
7. Medical School facilities.
8. Noise and vibration control.
9. Animal rooms.
10. Student housing.
11. Fume hood ductwork demolition.
12. Protections when using epoxy coatings.
13. Tree protection.

ALWAYS INCLUDE TWO PARAS BELOW.

B. This Section contains requirements that apply to Divisions 01 through 14 and Divisions 21, 22, 23, 26, 27, 28, 31, 32 and 33 of the specifications.

C. Related Work of other Sections:

1. Division 01 Section "Summary" for general restrictions on site use.

EDIT BELOW IN CONJUNCTION WITH FACILITY MANAGER AND PROJECT MANAGER. NOTE THAT SOME AREAS THAT MAY HAVE NON-STANDARD WORKING HOURS INCLUDING HOUSING, ANIMAL ROOMS.

1.2 DEFINITIONS:

A. Work Hours: 7:00 AM through 5:00 PM, Monday through Friday.

B. Business Hours: 8:30 AM through 5:00 PM, Monday through Friday.

C. Off-Hours: Hours outside of Work Hours defined above.

D. Early morning Hours: 7:00 AM through 8:30 AM, Monday through Friday.

ALWAYS EDIT AND INCLUDE USE OF PREMISES ARTICLE BELOW. ARTICLE IS PRE-EDITED FOR SMALLER SCALE RENOVATION PROJECTS.

1.3 USE OF PREMISES

A. Coordinate use of premises under direction of the Owner's Representative.

EDIT THE FOLLOWING TO SUIT PROJECT

1. The building in which Project is located will be continuously occupied during construction. Coordinate construction efforts with Owner to minimize interference with Owner's operations.
2. Provide and maintain access of Owner's personnel to toilets, telephone closets and janitor closets on Owner-occupied floors throughout Contract Time.
3. Maintain emergency egress routes for Owner's personnel as directed by Owner's Representative.

RETAIN 1 OF THE 2 OPTIONS BELOW. ALLOWING USE OF BUILDING TOILETS IS COMMON PRACTICE.

4. Existing toilets designated by Owner may be used by Contractor's personnel for personal use only during construction. Do not use toilet facilities to conduct construction operations without written permission of Owner's Representative.
   a. If use of toilets for construction activities is permitted by Owner's Representative, clean toilet facilities daily.
5. Contractor's personnel are prohibited from using toilets facilities during construction. Provide temporary toilet facilities for construction personnel. Coordinate location with Owner's representative.

INCLUDE THE FOLLOWING WHERE APPLICABLE

6. Contractor's staging area is strictly limited to areas indicated on the drawings. Where no staging area is indicated, Contractor's use of site is limited to areas within the Contract bounds, or as reasonably required to complete the Work. Strictly comply with Owner's Representative's directions establishing staging and operation areas, through-building routes, and locations for material delivery and disposal.

ALWAYS INCLUDE BELOW.

7. Smoking is prohibited in all University of Michigan buildings and grounds, including, Project site, mechanical rooms, utility spaces, and roof tops.

ALWAYS INCLUDE BELOW.

1.4 SECURITY

A. Purchase University-provided photographic identity badges for each person engaged in on-site work and ensure that workers wear badges at all times on University property. Purchase cost per badge is $4.00. Coordinate through Owner's Representative.

EDIT AND INCLUDE PARKING ARTICLE BELOW FOR ALL PROJECTS THAT DO NOT HAVE SPECIAL CONDITIONS. PROJECTS THAT USE SPECIAL CONDITIONS MAY INCLUDE PARKING REQUIREMENTS IN THE SPECIAL CONDITIONS. COORDINATE WITH CONSTRUCTION MANAGEMENT.

COORDINATE PARKING LOT DESIGNATION WITH CONSTRUCTION MANAGEMENT AND SVEN SAWIN (UPO). INCLUDE PRINTOUT OF THIS SECTION WITH BRR PAPERWORK.

TYPICAL LOCATIONS:
SC7 -- NORTHEAST CORNER OF STADIUM BLVD AND KIPKE DR.

NC37 -- GREEN ROAD COMMUTER LOT. NOTE THAT THIS LOT IS SERVED BY AATA BUSES NOT UM BUSES. SELECT LANGUAGE AS APPROPRIATE BELOW.

1.5 PARKING ON U-M PROPERTY

A. Arrange parking for Contractor's personnel in accordance with Article 47 of the University of Michigan Standard General Conditions.

INCLUDE THE FOLLOWING 3 ITEMS FOR SC7 LOT OR OTHER ORANGE LOTS, SERVED BY UM BUS SYSTEM. DO NOT USE FO NC37

B. The Owner has designated the use of U-M parking lot insert, located insert location for the Contractor's use on this project. This lot requires each vehicle to display a U-M orange parking permit and is the only U-M parking that will be made available to the Contractor for this project.

1. The cost and arrangement for purchase of permits for U-M parking shall be the Contractor's responsibility. The Owner will not repay the Contractor for parking for this project. Information regarding current rates and annual price adjustments (traditionally on July 1 each year) for parking permits may be obtained from the U-M Parking Customer Services office located at 523 South Division Street, Ann Arbor, Michigan 48104. Phone 734-764-8291.
2. The Owner will allow use of standard U-M bus services for contractor personnel between the above designated lot and the jobsite at no cost to the Contractor. The U-M bus follows an existing schedule and route that may not go directly to, nor stop directly in front of the jobsite. The U-M bus frequency and bus routes can be obtained from the U-M Parking Customer Services office or the LPT website (http://ltp.umich.edu/transit/routes.php).

INCLUDE THE FOLLOWING 3 ITEMS FOR NC37 (GREEN ROAD COMMUTER LOT) ONLY

C. The Owner has designated the use of U-M parking lot NC37 (Green Road commuter lot), located on Green Road, near Baxter Road for the Contractor's use on this project. This lot does not require permits.

1. The Owner has designated the use of U-M parking lot NC37, located on Green Road, near Baxter Road for the Contractor's use on this project. This lot does not require permits.
2. The AAATA bus systems serves NC37. Bus frequency and bus routes can be obtained from the AAATA website (http://www.theride.org).

INCLUDE ON ALL PROJECTS.

D. The Contractor shall not transport materials or tools on UM or AAATA busses.

ALWAYS EDIT AND INCLUDE SCHEDULING ARTICLE BELOW. COORDINATE WITH AEC CONSTRUCTION MANAGEMENT.

1.6 SCHEDULING OF WORK

A. Schedule work with Owner to fit Owner's operations, to facilitate completion of this work, to coordinate with and expedite new construction work on project, and as follows:

1. Schedule with Owner work that interferes with facility operation, including shut-off of mechanical and electrical services and encumbrance of Owner's ingress and egress routes and normal operation. Provide the following notice of planned interruption of services:

10 DAYS IS MINIMUM FOR ALL PROJECTS

   a. Provide not less than 10 working days notice before interruption, with final confirmation not less than 72 hours before interruption.

2. When permitted by Owner's Representative to deliver items of equipment to Owner's loading dock facilities, schedule such deliveries in advance with Owner. Provide minimum 1 business day notice prior to planned delivery time of equipment.
   a. Dock hours: < >
   b. Permitted delivery hours: < >

IN OCCUPIED BUILDINGS, WORK HOURS SHOULD BE DISCUSSED WITH THE AEC CONSTRUCTION MANAGEMENT AND BUILDING FACILITY MANAGER AND MODIFIED ACCORDINGLY. NOTE THAT WORK IN RESIDENCE HALLS HAS DIFFERENT TIME RESTRICTIONS. COORDINATE WITH "STUDENT HOUSING" ARTICLE BELOW.

3. Schedule work during Work Hours unless otherwise approved by Owner.

INCLUDE THE FOLLOWING ONLY WHERE A SPECIFIC TIME PERIOD OR DEADLINE DATE IS REQUIRED. IF REQUIRED, DATE WILL BE LISTED IN FRONT END DOCUMENTS PRODCUED BY PROJECT CONTROLS.

4. Schedule and coordinate construction operations to achieve Substantial Completion, ready for Owner's occupancy, by the date listed in the form of proposal.

B. Start of Operations: Do not commence work before insurance and bonds have been submitted to Owner.

INCLUDE REFRIGERANT HANDLING REQUIREMENTS BELOW IN CONSULTATION WITH MECHANICAL ENGINEER, BUT ALWAYS WHEN DEMOLITION WILL INCLUDE REMOVAL OF A/C EQUIPMENT OR PIPING, AND WHENEVER NEW A/C EQUIPMENT WILL BE INCLUDED IN THE PROJECT.

1.7 REFRIGERANT HANDLING

A. Refrigerant Installation and Disposal: Perform all work related to refrigerant contained in chillers, cooling coils, air conditioners, and similar equipment, including related piping, in strict accordance with the following requirements:

1. ASHRAE Standard 15 and Related Revisions: Safety Code for Mechanical Refrigeration.
2. ASHRAE Standard 34 and Related Revisions: Number Designation and Safety Classification of Refrigerants.
3. United States Environmental Protection Agency (US EPA) requirements of Section 808 (Prohibition of Venting and Regulation of CFC) and applicable State and local regulations of authorities having jurisdiction.

B. Comply with Owner's tracking procedure for CFC and HCFC refrigerants. When new refrigeration equipment is installed, or when refrigerant is disposed of, complete the "Refrigerant Disposal Form". Copies of the form are available from Owner's Facilities and Operations Air Conditioning Shop. Contact (734) 647-2041. Submit completed forms to the Owner's Representative and Air Conditioning Shop.

1. For new refrigeration equipment, the following information is required: Unit location, area served, make, model and serial number of unit, refrigerant type and quantity.
2. For removed refrigeration equipment, the following information is required: Unit location, area served, make, model and serial number of unit, refrigerant type and quantity. Removed refrigerant shall become the property of the Contractor.

INCLUDE BELOW FOR TUNNEL PROJECTS. DELETE IF TUNNEL WORK NOT INCLUDED IN PROJECT

1.8 TUNNEL PROJECTS

A. Tunnel Access: As shown on drawings.

B. Construction Energy: Use of electric arc welders is permitted at the discretion of the Owner, subject to verification of adequacy of power source.

1. Notify the Owner of the expected electrical consumption per welding rig and the number of rigs proposed for use.
2. The Owner will identify sources of limited amounts of both 120 VAC, single phase, electric power, and compressed air, from existing distribution systems.
3. Tie into the identified sources for power and compressed air only in the presence of Owner's personnel.

C. Safety Requirements: Perform work within tunnels in strict compliance with the published requirements of Owner's Environment, Health and Safety (EHS) department. Copies of requirements are available from the Safety Division of Owner's EHS department.

D. Contractor shall notify Department of Public Safety Dispatch at 734-763-1131 prior to entering and after exiting the tunnel system.

EDIT AND INCLUDE BELOW FOR MEDICAL SCHOOL PROJECTS. CAN BE EDITED FOR OTHER SCHOOLS AND COLLEGES. NOTE THAT WORK SUSPENSION AND RIGOROUS CLEANING REQUIREMENTS ADD COST.

1.9 MEDICAL SCHOOL FACILITIES

A. Scheduled Suspended-Work Periods: The University's Medical School conducts noise sensitive research and regularly scheduled academic examinations throughout the year. Certain construction operations are expected to result in noise, vibration, utility shut-offs, and other nuisances that will negatively affect the examination environment.

1. Upon request of the Owner's Representative, suspend activities conducted within the indicated areas that produce noise, vibration, and other nuisances, or that otherwise have, in the opinion of the Owner, the potential to disturb Medical School research and examinations:
   a. The precise dates, times, and durations of the work suspension periods are unknown. The Owner's Representative will provide full details of each required work suspension not less than 7 calendar days prior the beginning of the suspension.

REVIEW QUANTITY BELOW WITH MEDICAL SCHOOL FACILITIES PRIOR TO INCLUDING. WORK IN MEDICAL SCIENCE UNIT II SECOND AND THIRD FLOORS TEND TO IMPACT STUDENTS & EXAMS MOST FREQUENTLY.

   b. Include in the construction schedule 20 working days, of eight hours each, of suspended work time within the areas indicated.

USUALLY INCLUDE BELOW FOR ALL MEDICAL SCHOOL PROJECTS.

B. Daily Cleaning Program: In public areas, including lobbies, corridors, elevator cabs, and similar areas used for construction traffic, but outside the limit of the Project, comply with the following:

1. Either at the end of each working day or before 7:30 AM each working day, broom clean floors using commercial cleaning compound. Wet mop floors after broom cleaning to completely remove dirt, dust, and scuff.
2. Storage of construction related materials and equipment, including temporary storage of all types, is prohibited outside the Project limits.

THE FOLLOWING CAN HAVE SIGNIFICANT COST IMPLICATIONS. DISCUSS THE FOLLOWING REQUIREMENTS WITH MEDICAL SCHOOL REPRESENTATIVE BEFORE INCLUSION.

C. Nuisance Control Program: Schedule dust, noise, vibration, and fume generating activities during Off Hours. Applicable nuisance-generating activities include:

1. Demolition work, including cutting, coring, asbestos abatement, and debris removal operations.
2. Use of gasoline or diesel-powered vehicles or equipment.
3. Utility shut-downs and tie-ins.

4. Fume/odor generating construction activities, including application of non-water-based paints, epoxy coatings, resinous flooring and similar materials that release significant quantities of volatile organic compounds during application and cure.
5. Construction activities in public areas (including corridors, lobbies and stairs) outside the immediate Project limits.
6. Delivery of materials to site and trucking of debris from site.
7. Transportation of construction materials and debris through public areas (including corridors, lobbies and stairs) to and from immediate Project limits.

INCLUDE BELOW FOR NOISE AND VIBRATION CONTROL EXCEPT IN MEDICAL SCHOOL.

DELETE BELOW FOR MEDICAL SCHOOL PROJECTS AND USE "SPECIAL REQUIREMENTS FOR MEDICAL SCHOOL PROJECTS" ARTICLE.

1.10 NOISE AND VIBRATION CONTROL

A. Noise-Vibration Restrictions: Noise- and vibration-sensitive research will be conducted for the duration of the Project.

THE OPTIONS BELOW ARE GIVEN AS A GUIDE TO CREATING YOUR OWN PROJECT-SPECIFIC SPECIAL REQUIREMENTS - READ AND EDIT THE FOLLOWING CAREFULLY. TYPICALLY NOT ALL WILL APPLY.

1. Demolition operations are restricted to Off-Hours.
2. Terminate disruptive work during the times and dates listed below:

PROVIDE SPECIFIC TIMES AND DATES DURING WHICH DIRUPTIVE WORK SHOULD NOT OCCUR (E.G.: EXAM SCHEDULE IN ADJACENT CLASSROOM)

a. <>

3. Arrange a system of notification with Owner's Representative that will provide building occupants not less than 24 hours warning of performance of construction operations that will cause noise and vibration.
4. Conduct demolition work in a single, continuous operation. Complete demolition work within 7 calendar days from start of demolition operations.
5. Plan, schedule and perform work during evenings and weekends, at no additional cost to Owner, as required to achieve completion of floor slab demolition within indicated time.

INCLUDE BELOW FOR WORK INSIDE ANIMAL ROOMS IN ANY UNIVERSITY UNIT.

1.11 ANIMAL ROOMS

THE FOLLOWING REQUIREMENTS MAY NOT BE REQUIRED IN EVERY CASE. DISCUSS WITH ULAM REPRESENTATIVE BEFORE INCLUSION.

A. For work conducted in animal rooms, comply with the following special scheduling requirements:

1. Schedule work in designated Animal Rooms during Work Hours.

2. Unless other arrangements have been agreed to by Owner in writing, Contractor's personnel shall not enter designated Animal Rooms until each of the following conditions are met:

REVISE BELOW TO SUIT DEPARTMENT AND REPRESENTATIVE FOR EACH PROJECT.

a. Contractor has coordinated work with Medical School Facilities Management and Planning. Contact the Medical School Facilities Department, located in room 1590 of Medical Science Research Building (MSRB) II, at (734) 747-2788.
b. Owner has removed animals from each room in which work is to be performed.
c. Owner's personnel have cleaned each room in which work is to be performed and notified Contractor that each room is ready.
d. Contractor's personnel are properly attired in clothing provided by Owner. Attire is required for the protection of the sterile environment provided for research animals. Contractor's personnel should not expect to encounter substances or contaminants hazardous to humans, unless otherwise informed by Owner.

INCLUDE BELOW FOR PROJECTS IN HOUSING DEPARTMENT BUILDINGS.

1.12 STUDENT HOUSING

A. The building will be occupied and used as a residence throughout the construction period.

B. Comply with the following special safety and security requirements for work conducted within student occupied buildings and areas:

MODIFY TIMES BELOW IN COOPERATION WITH HOUSING DEPARTMENT REPRESENTATIVE

1. Schedule Work during the Work Hours, with the following restrictions:
   a. Occupied Buildings: Do not begin work that will generate noise or vibration before 9:00 AM.

MODIFY OR DELETE THE FOLLOWING SUBPARA TO SUIT PROJECT CONDITIONS. COORDINATE WITH HOUSING DEPARTMENT REPRESENTATIVE.

   b. Study and Exam Days: No work will be permitted during officially designated study and exam days. Study and exam days include:

LIST ALL APPLICABLE DATES BELOW.

      1) <>
2. Building Access: During Business Hours, notify Owner's Representative for access to Project site.

a. Individual areas can be opened as often as once each day by the Owner's building facilities manager. When more frequent daily access is required, or when access is required for more than 5 working days, obtain keys from the Housing Security Department, or from the University Key Office. Use keys to obtain access to areas in strict compliance with approved construction schedule issued to Housing Security. When working in more than one area, check with the building facilities manager to ensure no scheduling conflicts exist.

b. Building access outside of Business Hours is available only with the written approval of the Owner's Representative. Coordinate access with the Owner's Representative and the Owner's Public Safety Department.

3. Personal Conduct Restrictions: Employees of the Contractor and subcontractors shall comply with the following restrictions regarding personal conduct while on University of Michigan property:

a. Harassment: Conduct considered by the Owner as harassing is strictly prohibited, including the use of profanity; or the use of derogatory or demeaning gender- or race-related comments or actions. The Owner reserves the right to require the Contractor, at no additional cost to the Owner, to remove from the Project all personnel who violate this policy.

INCLUDE BELOW IN PROJECTS WITH FUME HOOD DUCTWORK MODIFICATION OR DEMOLITION.

1.13 FUME HOOD DUCTWORK DEMOLITION AND MODIFICATION

A. Existing fume hood ductwork may have been corroded by exposure to a variety of chemicals during its use.

B. Ensure that all personnel engaged in demolition or modification of fume hood ductwork wear indicated personnel protective equipment (PPE).

C. PPE is prudent and precautionary only; it does not suggest an inherent health hazard from the ductwork.

D. In addition to standard OSHA and MIOSHA safety gear (such as hard hats, steel-toed footwear and similar items), PPE includes the following:

1. Leather gloves for dry conditions; rubber over-gloves for wet conditions.
2. Safety eye wear to prevent dust or debris from falling into the eyes.
3. Protective outerwear to protect against dust or debris contact with skin.

INCLUDE BELOW IN PROJECTS WHERE THE BUILDING WILL BE OCCUPIED DURING CONSTRUCTION AND SOLVENT-BORNE OR HIGH BUILD EPOXY BLOCK FILLERS, PAINTS, OR FLOOR COATINGS. CONSIDER LOW VOC PRODUCTS WHERE POSSIBLE.

1.14 PROTECTIONS WHEN USING EPOXY COATINGS

A. The building will be occupied during construction.

B. Comply with the following requirements for Work involving the application of solvent-borne epoxy coatings or high-build epoxy products:

1. Protect the work area where the epoxy coatings are applied. Provide temporary barrier enclosures around the work area consisting of 8 mil polyethylene sheeting supported by wood or metal studs. The joints in the sheeting and the perimeter of the barriers must be sealed.
2. Provide temporary equipment to ensure that the work area is under negative pressure relative to the rest of the building. Ventilation must be sufficient to prevent a build-up of excessive vapors inside the enclosure during the application and curing of epoxy. The ventilation must be operational 24 hrs/day until completion of epoxy application and curing.
3. Provide seven days' notice prior to the beginning of epoxy application. The Owner's Representative shall schedule a meeting to coordinate activities required to achieve the protection requirements indicated above and to determine whether air quality monitoring will be performed during epoxy application. Attendees at the meeting shall include the General Contractor, the Subcontractor for the epoxy application, the Owner's Representative and a representative of the University of Michigan's Environment, Health and Safety Department (EHS).
4. Provide waste disposal plans to Owner's Representative for review and approval by UM EHS. Waste materials that have been in contact with products containing solvents must be disposed as hazardous waste.

1.15 TREE PROTECTION

INCLUDE BELOW FOR ALL PROJECTS WHERE TREES MIGHT BE AFFECTED BY CONSTRUCTION OPERATIONS, INCLUDING STAGING, LAY DOWN AREAS, AND CONTRACTOR PARKING (LEGAL OR ILLEGAL), EVEN IF NO ACTUAL SITE WORK IS PART OF THE PROJECT. IF THERE ARE NO TREES IN THE VICINITY OF THE PROJECT, PARAGRAPHS BELOW CAN BE DELETED.

IF THE VICINITY OF THE SITE CONTAINS TREES, IT WILL BE NECESSARY TO GET A TREE SURVEY. THE UNIVERSITY PLANNER'S OFFICE WILL PROVIDE ASSISTANCE IN OBTAINING THE TREE SURVEY. ALL TREES IN THE VICINITY OF THE CONSTRUCTION SITE SHOULD BE NOTED ON THE PLAN. SUBMIT THE PLAN TO THE UNIVERSITY FORESTER, WHO WILL DESIGNATE "SIGNIFICANT" TREES.

THE PROTECTION ZONE FOR SIGNIFICANT TREES CANNOT ENCROACH ON THE CANOPY DRIPLINE UNLESS THERE IS A COMPELLING REASON WHY THIS CANNOT HAPPEN. DEVIATION FROM THIS REQUIREMENT MUST BE APPROVED BY THE UNIVERSITY FORESTER AND THE ASSOC. VP FOR FACILITIES & OPERATIONS.

FOR TREES OTHER THAN SIGNIFICANT TREES, THE PROTECTIVE ZONE SHOULD EXTEND TO THE CANOPY DRIPLINE WHEREVER POSSIBLE.

DEVIATIONS FROM THIS STANDARD NEED TO BE APPROVED BY THE UNIVERSITY FORESTER

REFER TO DESIGN GUIDELINE TECHNICAL SECTION 013639 FOR INFORMATION REGARDING REMOVAL AND RELOCATION OR REPLACEMENT OF TREES.

A. Refer to Drawings for locations of trees and demarcation of protective zone for each tree.

B. Protect trees as follows:

1. Provide temporary fencing at the protective zone for each tree. Fencing must form a complete circumference.
2. No activity, including storage of materials or driving of vehicles, shall be allowed within the protective zone.
3. Do not move, remove or alter fencing for the duration of the Project.
4. Coordinate with Owner's Representative to provide aeration and gator bags as remediation measures for trees which have been negatively impacted by construction.

PART 2 - PRODUCTS (NOT APPLICABLE)

PART 3 - EXECUTION (NOT APPLICABLE)

END OF SECTION 011400

SECTION 012100 - ALLOWANCES

GENERALLY ASK FOR ASSISTANCE WHEN PREPARING THIS SECTION. PREVIOUS EXPERIENCE HAS SHOWN THIS TO BE A PROBLEM SECTION FOR MANY PROJECTS.

PART 1 - GENERAL

1.1 SUMMARY

A. Selected materials are shown and specified in the Contract Documents by allowances. Allowances have been established in lieu of additional requirements and to defer selection of actual materials to a later date. Additional requirements, if necessary, will be issued by Change Order.

THE FOLLOWING TYPE OF CASH ALLOWANCE INCLUDES MATERIAL ONLY, NOT LABOR - THIS TYPE IS COMMON FOR BRICK AND CARPET

1. Cash Allowances: Contractor's costs for unloading and handling on the site, labor, installation costs, overhead, profit and other expenses contemplated for the allowance shall be included in the Contract Sum and not in the allowance.

B. Type of allowance is "Lump-sum" cash allowance.

C. General information concerning cash allowances and procedures for submitting and handling Change Orders are included in "Standard General Conditions".

1.2 SELECTION AND PURCHASE

A. At the earliest feasible date after Contract award, advise the Owner of the date when the final selection and purchase of product described by allowance must be completed in order to avoid delay in performance of the Work.

1. When requested by the Owner, obtain proposals for each allowance for use in making final selections; include recommendations that are relevant to performance of the work.

1.3 SUBMITTALS

A. Submit proposals for purchase of products or systems included in allowance, in the form specified for Change Orders.

B. Submit invoices or delivery slips to indicate actual quantities of materials delivered to the site for use in fulfillment of allowance.

PART 2 - PRODUCTS (NOT APPLICABLE)

PART 3 - EXECUTION

3.1 SCHEDULE OF CASH ALLOWANCES

MODIFY THE FOLLOWING TO SUIT PROJECT. PAY SPECIAL ATTENTION TO DOLLAR VALUES - BELOW ARE EXAMPLES ONLY

A. Cash Allowance: Include a lump sum material cost of $35.00 per square yard for purchase of carpeting as indicated on drawings and specifications.

B. Cash Allowance: Include a lump sum material cost of $425.00 per thousand units for purchase of face brick as indicated on drawings and specifications.

END OF SECTION 012100

SECTION 012200 - UNIT PRICES

GENERALLY, EDITING THIS SECTION REQUIRES CAREFUL ATTENTION TO DETAIL AND STRONG KNOWLEDGE OF THE STANDARD GENERAL CONDITIONS - ASK FOR ASSISTANCE IF REQUIRED.

PART 1 - GENERAL

1.1 SUMMARY

A. Section includes administrative and procedural requirements for unit prices.

1.2 DEFINITION

A. Unit price: A unit price is an amount proposed by Bidders and stated on the Bid Form as a price per unit of measurement for materials or services that will be added to or deducted from the Contract Sum by Change Order if estimated quantities of Work required by the Contract Documents are increased or decreased

1.3 PROCEDURES

A. Unit prices include necessary material, overhead, profit and applicable taxes.

B. Refer to individual Sections

1. For demolition or construction activities requiring establishment of unit prices.
2. For requirements for materials and methods described under each unit price.

C. Owner reserves the right to reject the Contractor's measurement of Work-in-place that involves the use of established unit prices, and to have this Work measured by an independent surveyor acceptable to the Contractor at the Owner's expense.

RETAIN ONLY ONE OF THE FOLLOWING 2 OPTIONS. STANDARD UNIT PRICES SHOULD BE LISTED ONLY IN FOP. NON-STANDARD UNIT PRICES SHOULD BE DETAILED BELOW WITH SHORTER DESCRIPTION IN FOP.

D. List of Unit Prices: A schedule of unit prices is included in the Form of Proposal.

E. List of Unit Prices: A schedule of unit prices is included in Part 3.

PART 2 - PRODUCTS (NOT APPLICABLE)

PART 3 - EXECUTION

USE FRAMEWORK BELOW FOR NON-STANDARD UNIT PRICES.

A. SCHEDULE OF UNIT PRICE ITEMSUnit Price No. 1: *<Brief Description - match FOP>*

1. *<Detailed description>*
2. Unit of Measure: < >
3. Quantity: < >

END OF SECTION 012200

SECTION 012300 - ALTERNATES

PART 1 - GENERAL

1.1 SUMMARY

A. Notification: Immediately following award of Contract, prepare and distribute to each party involved notification of the status of each alternate. Indicate whether alternates have been accepted, rejected or deferred for consideration at a later date. Include a complete description of negotiated modifications to alternates, if any.

PART 2 - PRODUCTS (NOT APPLICABLE)

PART 3 - EXECUTION

3.1 SCHEDULE OF ALTERNATES

BELOW ARE 3 EXAMPLES OF ALLOWABLE ALTERNATE TYPES. COORDINATE DESCRIPTION IN THIS SECTION WITH AECION / FORM OF PROPOSAL (FOP). FOP DESCRIPTION ARE LIMITED TO 1 SENTENCE. SCOPE DESCRIPTION IN THIS SECTION SHOULD CONTAIN IDENTICAL KEY PHASE. ADDITIONAL DETAIL CAN BE PROVIDED FOLLOWING THE KEY PHRASE IF NEEDED.

A. Alternate No. 1: Provide the ADD price for <describe the additional work to be added to the base bid scope of work>

B. Alternate No. 2: Provide the DEDUCT price for <describe the work to be deleted from the base bid scope of work>

C. Alternate No. 3: Provide the ADD or DEDUCT price for providing_<description> in lieu of <description>.

END OF SECTION 012300

SECTION 013100 - PROJECT MANAGEMENT AND COORDINATION

PART 1 - GENERAL

1.1 RELATED SECTIONS

A. Additional project coordination, phasing, and scheduling requirements are included in Division 01 Sections "Summary" and "Work Restrictions"

1.2 COORDINATION

A. Project Meetings: Attend regular meetings with Owner and subcontractors as directed by Owner. Location of meetings will be determined by Owner.

B. Coordinate inspections and testing of concealed Work to occur prior to concealing that Work.

C. Coordinate sequencing of Work to occur during conditions of temperature, humidity, exposure, forecast weather, and status of Project completion, which will ensure best possible results for each unit of Work. Isolate each unit of Work from non-compatible Work, as required to prevent deterioration.

D. Coordinate work between trades for the most efficient sequence of installation, to prevent space conflicts, and to provide clearances required by code, Drawings, and the manufacturer.

1. Minor dimension changes (including the need to adjust finish dimensions), difficult installations and/or the addition of off-set fittings will not be considered changes to the Contract.
2. Obtain approval of the Owner's Representative prior to any changes or alternate configurations.

1.3 COORDINATION DRAWINGS

A. General: For all Work in areas indicated under scope, prepare coordination drawings with space conflicts resolved, and showing clearances required by code, Drawings, and the manufacturer.

EDIT BELOW TO BE PROJECT SPECIFIC

B. Scope: Provide coordination drawings for the following project areas:

EDIT TO BE PROJECT SPECIFIC. ON SMALLER PROJECTS, CONSIDER LIMITING TO CRITICAL AREAS TO MINIMIZE COST AND TIME IMPLICATIONS.

1. Open ceiling areas above 7-feet.
2. Ceiling and above ceiling space.
3. Slab Edge and Embedded Items.
4. Mechanical rooms.
5. Mezzanines and interstitial spaces.
6. Electrical rooms.
7. Shafts.
8. Tunnels.

9. Other spaces where the contractor determines limited space availability necessitates coordination.

EDIT BELOW TO BE PROJECT SPECIFIC

C. Content: Project-specific information, drawn accurately to a scale large enough to indicate and resolve conflicts.

1. General: Show the following on all drawings:
   a. Functional and spatial relationships of components.
   b. Space / access requirements as indicated by code, on Drawings, and per manufacturer requirements.
   c. Column center lines, interior partition locations and heights, ceiling heights, and fire rated construction locations.
   d. Dimensions.
2. Drawing types:
   a. Floor Plans
   b. Reflected Ceiling Plans
   c. Plenum Plans: Locate all components within ceiling plenum to accommodate layout of light fixtures and other ceiling mounted items indicated on Drawings.
   d. Section drawings: As needed to adequately represent the Work.
   e. Elevations: Locate all equipment, panels, controls, and other wall mounted items in mechanical and electrical rooms.
3. Architectural and structural: Show the following:
   a. Relationships between ceilings mounted devices and the acoustical ceiling grid.
   b. Sub-framing for support of ceiling, soffit, and wall systems
   c. Structural penetrations and openings for all disciplines.
   d. Location and size of access doors.
   e. Slab edge locations and sizes and locations of embedded items for metal fabrications, sleeves, anchor bolts, bearing plates, angles, door floor closers, slab depressions for floor finishes, curbs and housekeeping pads, and similar items.
4. Equipment:
   a. Indicate equipment that projects into the above ceiling coordination space.
5. Mechanical and Plumbing Work: Show the following:
   a. Sizes, bottom, and top elevations of ductwork, piping, and conduit runs, including insulation, bracing, flanges, and support systems.
   b. Dimensions of major components, such as dampers, valves, diffusers, access doors, and cleanouts.
   c. Fire-rated enclosures around ductwork.
   d. Location of DDC control panels and major control devices (e.g. flow meters, control dampers, control valves greater than 2")
   e. Location and pitch for steam, condensate, sanitary, storm, and all other pitched services.
   f. Space for tube pulls, coil pulls, filter removal, etc.
6. Electrical Work: Show the following:
   a. Runs of vertical and horizontal conduit 1-1/4 inches in diameter and larger.

b. Light fixture, exit light, emergency battery pack, smoke detector, and other fire-alarm device locations.
c. Panelboard, switchboard, switchgear, substation transformer, busway, generator, and motor control center locations.
d. Location of pull boxes and junction boxes, dimensioned from column center lines.
e. Cable trays.

7. Fire-Protection System: Show the following:
   a. Locations of standpipes, mains piping, branch lines, pipe drops, and sprinkler heads.

D. Process requirements:

1. Base drawings: Architect will furnish Contractor one set of digital data files of Drawings for use in preparing coordination digital data files.
   a. Architect makes no representations as to the accuracy or completeness of digital data files as they relate to Drawings or to existing conditions.
2. Meetings:
   a. Kick-off meeting: Introduce and define process. Establish drawing format, zoning, sequencing, and milestones schedule dates.
   b. Progress meetings as needed to complete the work but not less than every 2 weeks during coordination.
   c. Require each trade contractor's coordination representative to physically attend the meetings.
   d. Invite Architect, Engineer, and Owner's Representative to each meeting.
   e. Provide meeting minutes within 5 business day of each meeting.
3. Sequencing: Coordinate the addition of information from each trade in a sequence that best provides for coordination of the information and resolution of conflicts between installed components before submitting for review.
4. Conflict resolution: Resolve drawing conflicts between meetings. Review major conflicts at the meeting with the Architect / Engineer for resolution. Provide the Architect / Engineer with necessary information to review.
5. Field Coordination: Use approved coordination drawing during installation. When new conflicts are determined, review with coordination team, Architect / Engineer, and Owner's Representative for resolution.

E. Submittal requirements

1. Submit the following:
   a. Coordination drawings that the contractor has signed-off as being complete. Drawings shall be at a legible scale and include:
      1) Composite view of all systems.
      2) Isolated view of each individual system.
   b. Record drawings showing actual built conditions and service configurations.

2. Review: Architect will review coordination drawings to confirm that the Work is being coordinated, but not for the details of the coordination, which are Contractor's responsibility. If Architect determines that coordination drawings are not being prepared in sufficient scope or detail, or are otherwise deficient, Architect will so inform Contractor, who shall make changes as directed and resubmit.
3. Coordination Drawing Prints: Prepare coordination drawing prints according to requirements in Section 013300 "Submittal Procedures."

ELECTRONIC 2-D FILES LISTED BELOW.

4. Coordination Digital Data Files: Prepare coordination digital data files according to the following requirements:
   a. File Preparation Format: DWG, DXF, or DGN.
   b. File Submittal Format: Submit or post coordination drawing files using format same as file preparation format and Portable Data File (PDF) format.

PART 2 - PRODUCTS (NOT APPLICABLE)

PART 3 - EXECUTION (NOT APPLICABLE)

END OF SECTION 013100

SECTION 013200 - CONSTRUCTION PROGRESS DOCUMENTATION

THIS SECTION SPECIFIES REQUIREMENTS FOR CONSTRUCTION SCHEDULE AND SHOP DRAWING LOG. MODIFY AS REQUIRED FOR PROJECT.

PART 1 - GENERAL

1.1 SUMMARY

A. This Section includes administrative and procedural requirements for documenting the progress of construction during performance of the Work, including the following:

ADJUST LIST BELOW TO SUIT PROJECT.

1. Contractor's Construction Schedule.
2. Submittals Schedule.

1.2 SUBMITTALS

A. Submittals Schedule: Submit one copy of schedule. Arrange the following information in a tabular format in chronological order:

REVISE LIST BELOW TO SUIT PROJECT. ADD INFORMATION, SUCH AS SCHEDULED DATES FOR PURCHASING AND INSTALLATION AND THE ACTIVITY OR EVENT NUMBER, IF A CPM CONSTRUCTION SCHEDULE IS USED.

1. Scheduled date for first submittal.
2. Specification Section number and title.
3. Submittal category (action or informational).
4. Name of subcontractor.
5. Description of the Work covered.
6. Scheduled date for Architect's final release or approval.

B. Contractor's Construction Schedule: Submit one printed copy of initial schedule, large enough to show entire schedule for entire construction period.

1.3 COORDINATION

A. Coordinate preparation and processing of schedules and reports with performance of construction activities and with scheduling and reporting of separate contractors.

B. Coordinate Contractor's Construction Schedule with the Schedule of Values, list of subcontracts, Submittals Schedule, progress reports, payment requests, and other required schedules and reports.

1. Secure time commitments for performing critical elements of the Work from parties involved.
2. Coordinate each construction activity in the network with other activities and schedule them in proper sequence.

PART 2 - PRODUCTS

2.1 SUBMITTALS SCHEDULE

A. Submit concurrently with the first complete submittal of Contractor's Construction Schedule. Comply with requirements of individual specification sections.

B. Coordinate Submittals Schedule with list of subcontracts, the Schedule of Values, and Contractor's Construction Schedule.

2.2 CONTRACTOR'S CONSTRUCTION SCHEDULE, GENERAL

A. Time Frame: Extend schedule from date established for the Notice of Award to date of Substantial Completion.

1. Contract completion date shall not be changed by submission of a schedule that shows an early completion date, unless specifically authorized by Change Order.

B. Activities: Treat each story or separate area as a separate numbered activity for each principal element of the Work. Comply with the following:

1. Procurement Activities: Include procurement process activities for long lead items and major items, requiring a cycle of more than 60 days, as separate activities in schedule. Procurement cycle activities include, but are not limited to, submittals, approvals, purchasing, fabrication, and delivery.
   a. ***INSERT LIST OF MAJOR ITEMS OR PIECES OF EQUIPMENT***
2. Submittal Review Time: Include review and re-submittal times indicated in Division 01 Section "Submittal Procedures" in schedule. Coordinate submittal review times in Contractor's Construction Schedule with Submittals Schedule.
3. Startup and Testing Time: Include not less than ***INSERT NUMBER*** business days for startup and testing.
4. Substantial Completion: Indicate completion in advance of date established for Substantial Completion, and allow time for Architect's administrative procedures necessary for certification of Substantial Completion.

C. Constraints: Include constraints and work restrictions indicated in the Contract Documents and as follows in schedule, and show how the sequence of the Work is affected.

DELETE SUBPARAGRAPHS BELOW NOT APPLICABLE.

1. Phasing: Arrange list of activities on schedule by phase.
2. Work Restrictions: Show the effect on the schedule of the following:

REVISE LIST BELOW TO SUIT PROJECT.

   a. Limitations of continued occupancies.
   b. Uninterruptible services.
   c. Use of premises restrictions.

D. Milestones: Include milestones indicated in the Contract Documents in schedule, including, but not limited to the following:

EDIT BELOW TO BE PROJECT SPECIFIC. INCLUDE ITEM 2 AND SUB-ITEMS BELOW FOR ALL PROJECT SUBMITTED TO BFS. SUB-ITEMS A, B, & D CAN BE DELETED FROM PROJECTS THAT DO NOT HAVE FIRE ALARM OR FIRE SUPPRESSION WORK. REFER TO DESIGN GUIDELINE 1.0 CODES AND REGULATORY AGENCIES FOR A LISTING OF BFS BUILDINGS.

1. Notice to Proceed.
2. State of Michigan Bureau of Fire Services (BFS) milestones:
   a. Submission of "Application for Fire Safety Plan Examination" and associated fee for fire alarm and fire suppression work.
   b. Submission of OFS 12A and associated fee.
   c. BFS 50% inspection.
   d. Final fire alarm test.
   e. BFS final inspection.
3. Delivery of major equipment.
4. Substantial Completion.
5. Final Completion.

2.3 CONTRACTOR'S CONSTRUCTION SCHEDULE (GANTT CHART)

GANTT-CHART SCHEDULE IN THIS ARTICLE IS ADEQUATE FOR MANY PROJECTS.

A. Gantt-Chart Schedule: Submit a comprehensive, fully developed, horizontal Gantt-chart-type, Contractor's Construction Schedule within 30 days of date established for the Notice of Award. Base schedule on the Preliminary Construction Schedule and whatever updating and feedback was received since the start of Project.

B. Preparation: Indicate each significant construction activity separately. Identify first workday of each week with a continuous vertical line.

PART 3 - EXECUTION

3.1 CONTRACTOR'S CONSTRUCTION SCHEDULE

A. Contractor's Construction Schedule Updating: At monthly intervals, update schedule to reflect actual construction progress and activities

   1. As the Work progresses, indicate Actual Completion percentage for each activity.

B. Distribution: Distribute copies of approved schedule to Owner and other parties identified by Contractor with a need-to-know schedule responsibility.

   1. Post copies in Project meeting rooms and temporary field offices.
   2. When revisions are made, distribute updated schedules to the same parties and post in the same locations. Delete parties from distribution when they have completed their assigned portion of the Work and are no longer involved in performance of construction activities.

END OF SECTION 013200

SECTION 013300 - SUBMITTAL PROCEDURES

9/20/11 SECTION REWRITTEN TO INCORPORATE ELECTRONIC SUBMITTAL PROCEDURE. NOTE THAT ONLY HARD COPIES INCLUDED IN SECTION REQUIREMENTS ARE SAMPLES.

PART 1 - GENERAL

1.1 RELATED DOCUMENTS

A. Drawings and general provisions of the Contract, including Standard General Conditions, Supplemental General Conditions, Division 01 Specification Sections, and other applicable Specification Sections, apply to this Section.

B. Related sections:

EDIT BELOW TO BE PROJECT SPECIFIC

1. Division 01 Section "Construction Progress Documentation" for submitting submittal and construction schedules.
2. Division 01 Section "Special Procedures for Fire Marshal Review and Inspection" for submittal requirements for Fire Marshal review.
3. Division 01 Section "Project Commissioning" for commissioning submittals.
4. Division 01 Section "Operation and Maintenance Manuals" for submitting operation and maintenance manuals.

1.2 SUMMARY

A. Section includes requirements for the submittal schedule and administrative and procedural requirements for submitting Shop Drawings, Product Data, Samples, and other submittals.

1.3 DEFINITIONS

A. Facilities Information Center (FIC): Owner's department responsible for tracking and archiving submittals.

B. ProjectDox: Communications software utilized by Owner that enables members to upload and download electronic files via web based graphical interface. Owner will establish project specific site with project specific members.

C. Portable Document Format (PDF): An open standard file format licensed by Adobe Systems used for representing documents in a device-independent and display resolution-independent fixed-layout document format.

1.4 SUBMITTAL ADMINISTRATIVE REQUIREMENTS

A. Coordination: Coordinate preparation and processing of submittals with performance of construction activities.

1. Coordinate each submittal with fabrication, purchasing, testing, delivery, other submittals, and related activities that require sequential activity.

2. Submit all submittal items required for each Specification Section concurrently unless partial submittals for portions of the Work are indicated on approved submittal schedule.

RETAIN SUBPARAGRAPH BELOW IF ONE SUBMITTAL HAS AN IMPACT ON ANOTHER SUBMITTAL. SUBMITTALS THAT REQUIRE CONCURRENT REVIEW SHOULD BE SO INDICATED IN THOSE SECTIONS.

3. Coordinate transmittal of different types of submittals for related parts of the Work so processing will not be delayed because of need to review submittals concurrently for coordination.
   a. Architect reserves the right to withhold action on a submittal requiring coordination with other submittals until related submittals are received.

B. Processing Time: Allow time for submittal review, including time for resubmittals, as follows. Time for review shall commence on Architect's receipt of submittal. No extension of the Contract Time will be authorized because of failure to transmit submittals enough in advance of the Work to permit processing, including resubmittals.

1. Initial Review: Allow 10 business days for initial review of each submittal. Allow additional time if coordination with subsequent submittals is required. Architect will advise Contractor when a submittal being processed must be delayed for coordination.
2. Resubmittal Review: Allow 10 business days for review of each resubmittal.

C. Electronic Submittals: Identify and incorporate information in each electronic submittal file as follows:

1. Assemble complete submittal package into a single indexed file incorporating submittal requirements of a single Specification Section and transmittal form.
2. Name file with submittal number or other unique identifier, including revision identifier.
   a. File name shall use project identifier (UM project number) and Specification Section number followed by a brief description. Resubmittals shall include a decimal point, followed by a sequential number Example file names:
      1) PXXXX 081700 Door hardware schedule.pdf; PXXXX 081700 Door hardware schedule.2.pdf
      2) PXXXX 238236 Finned Tube Cover product data.pdf
   b. Coordinate project specific file naming with Architect prior to first submittal.
3. Transmittal Form for Electronic Submittals: Use electronic form, containing the following information:
   a. Project name and Owner's Project Number.
   b. Date.
   c. Architect name and address.
   d. Contractor name, address and telephone number.
   e. Name of firm or entity that prepared submittal.
   f. Names of subcontractor, manufacturer, and supplier.
   g. Specification Section number and title or Drawing sheet number.
   h. Description of items included:
      1) Brief written description of each item.
      2) Indication of full or partial submittal.

3) Action requested (eg. "for review", "for information only", or other notation).
4) Location(s) where product is to be installed, as appropriate.

D. Options: Identify options requiring selection by Architect.

E. Deviations and Additional Information: Clearly note on submittals all deviations from Contract Documents. Do not proceed with work related to the submittal, regardless of Architect/Engineer's action marking, without the Architect/Engineer's specific, written approval of such deviation. Refer to Standard General Conditions for additional requirements and obligations related shop drawings.

F. Resubmittals: Resubmit in same form as initial submittal.

1. Note date and content of previous submittal.
2. Note date and content of revision in label or title block and clearly indicate extent of revision.
3. Resubmit submittals until they are marked with approval notation from Architect's action stamp.

G. Distribution: Furnish copies of final submittals to manufacturers, subcontractors, suppliers, fabricators, installers, authorities having jurisdiction, commissioning agent, Owner and others as necessary for performance of construction activities. Show distribution on transmittal forms.

H. Use for Construction: Retain complete copies of submittals on Project site. Use only final action submittals that are marked with approval notation from Architect's action stamp.

PART 2 - PRODUCTS

2.1 SUBMITTAL PROCEDURES

A. General Submittal Procedure Requirements: Prepare and submit submittals required by individual Specification Sections. Types of submittals are indicated in individual Specification Sections.

1. Upload electronic submittals as PDF electronic files directly to "To be Reviewed" folder on ProjectDox website specifically established for Project.
2. Notify all website members using ProjectDox automated message system. Include the file name for each submittal uploaded.
3. Architect uploads annotated file to the "Reviewed" folder on ProjectDox website.
4. Architect notifies all website members using ProjectDox automated message system. Message will include file name for each submittal reviewed and uploaded.
5. Notify Architect, Owner's Representative and FIC that reviewed files have been retrieved.

B. Certificates and Certifications Submittals: Provide a statement that includes signature of entity responsible for preparing certification. Certificates and certifications shall be signed by an officer or other individual authorized to sign documents on behalf of that entity.

C. Product Data: Collect information into a single submittal for each element of construction and type of product or equipment.

1. If information must be specially prepared for submittal because standard published data are not suitable for use, submit as Shop Drawings, not as Product Data.
2. Mark each copy of each submittal to show which products and options are applicable.
3. Include the following information, as applicable:
   a. Manufacturer's catalog cuts.
   b. Manufacturer's product specifications.
   c. Standard color charts.
   d. Statement of compliance with specified referenced standards.
   e. Testing by recognized testing agency.
   f. Application of testing agency labels and seals.
   g. Notation of coordination requirements.
   h. Availability and delivery time information.
4. For equipment, include the following in addition to the above, as applicable:
   a. Wiring diagrams showing factory-installed wiring.
   b. Printed performance curves.
   c. Operational range diagrams.
   d. Clearances required to other construction, if not indicated on accompanying Shop Drawings.
5. Submit Product Data before or concurrent with Samples.

D. Shop Drawings: Prepare Project-specific information, drawn accurately to scale. Do not base Shop Drawings on reproductions of the Contract Documents or standard printed data.

1. Preparation: Fully illustrate requirements in the Contract Documents. Include the following information, as applicable:
   a. Identification of products.
   b. Schedules.
   c. Compliance with specified standards.
   d. Notation of coordination requirements.
   e. Notation of dimensions established by field measurement.
   f. Relationship and attachment to adjoining construction clearly indicated.

DELETE BELOW IF PROJECT DOES NOT INCLUDE DELEGATED DESIGN.

   g. Seal and signature of professional engineer if specified.

REVISE SPECIFIC SHEET SIZE INDICATED BELOW IF NEEDED FOR PROJECT.

2. Sheet Size: Except for templates, patterns, and similar full-size drawings, submit Shop Drawings in electronic files formatted for printing to scale on sheets at least 8-1/2 by 11 inches, but no larger than 30 by 42 inches.

E. Samples: Submit Samples for review of kind, color, pattern, and texture for a check of these characteristics with other elements and for a comparison of these characteristics between submittal and actual component as delivered and installed.

1. Transmit Samples that contain multiple, related components such as accessories together in one submittal package.
2. Identification: Attach label on unexposed side of Samples that includes the following:

a. Generic description of Sample.
b. Product name and name of manufacturer.
c. Sample source.
d. Number and title of applicable Specification Section.
e. Specification paragraph number and generic name of each item.

3. Provide corresponding electronic submittal of Sample transmittal, digital image file illustrating Sample characteristics, and identification information for record.
4. Disposition: Maintain sets of approved Samples at Project site, available for quality-control comparisons throughout the course of construction activity. Sample sets may be used to determine final acceptance of construction associated with each set.

RETAIN FIRST SUBPARAGRAPH BELOW IF REQUIRED.

a. Samples that may be incorporated into the Work are indicated in individual Specification Sections. Such Samples must be in an undamaged condition at time of use.
b. Samples not incorporated into the Work, or otherwise designated as Owner's property, are the property of Contractor.

RETAIN BELOW IF APPLICABLE.

5. Samples for Initial Selection: Submit manufacturer's color charts consisting of units or sections of units showing the full range of colors, textures, and patterns available.
   a. Number of Samples: Submit one full set of available choices where color, pattern, texture, or similar characteristics are required to be selected from manufacturer's product line. Architect will return submittal with options selected.
6. Samples for Verification: Submit full-size units or Samples of size indicated, prepared from same material to be used for the Work, cured and finished in manner specified, and physically identical with material or product proposed for use, and that show full range of color and texture variations expected.
   a. Number of Samples: Comply with requirement of individual specification. Unless noted otherwise, submit three sets of Samples. Architect will retain **one** Sample set; FIC will retain one sample set; remainder will be returned.
      1) Submit a single Sample where assembly details, workmanship, fabrication techniques, connections, operation, and other similar characteristics are to be demonstrated.
      2) If variation in color, pattern, texture, or other characteristic is inherent in material or product represented by a Sample, submit at least three sets of paired units that show approximate limits of variations.

F. Product Schedule: As required in individual Specification Sections, prepare a written summary indicating types of products required for the Work and their intended location. Include the following information in tabular form:

1. Type of product. Include unique identifier for each product indicated in the Contract Documents or assigned by Contractor if none is indicated.
2. Manufacturer and product name, and model number if applicable.
3. Number and name of room or space.
4. Location within room or space.

G. Qualification Data: Prepare written information that demonstrates capabilities and experience of firm or person. Include lists of completed projects with project names and addresses, contact information of architects and owners, and other information specified.

H. Welding Certificates: Prepare written certification that welding procedures and personnel comply with requirements in the Contract Documents. Submit record of Welding Procedure Specification and Procedure Qualification Record on AWS forms. Include names of firms and personnel certified.

I. Installer Certificates: Submit written statements on manufacturer's letterhead certifying that Installer complies with requirements in the Contract Documents and, where required, is authorized by manufacturer for this specific Project.

J. Manufacturer Certificates: Submit written statements on manufacturer's letterhead certifying that manufacturer complies with requirements in the Contract Documents. Include evidence of manufacturing experience where required.

K. Product / Material Certificates: Submit written statements on manufacturer's letterhead certifying that product / material complies with requirements in the Contract Documents.

L. Material Test Reports: Submit reports written by a qualified testing agency, on testing agency's standard form, indicating and interpreting test results of material for compliance with requirements in the Contract Documents.

M. Product Test Reports: Submit written reports indicating that current product produced by manufacturer complies with requirements in the Contract Documents. Base reports on evaluation of tests performed by manufacturer and witnessed by a qualified testing agency, or on comprehensive tests performed by a qualified testing agency.

N. Preconstruction Test Reports: Submit reports written by a qualified testing agency, on testing agency's standard form, indicating and interpreting results of tests performed before installation of product, for compliance with performance requirements in the Contract Documents.

O. Compatibility Test Reports: Submit reports written by a qualified testing agency, on testing agency's standard form, indicating and interpreting results of compatibility tests performed before installation of product. Include written recommendations for primers and substrate preparation needed for adhesion.

RETAIN BELOW IF PROJECT INCLUDES DELEGATED DESIGN SERVICES. TYPICALLY DELETE.

2.2 DELEGATED-DESIGN SERVICES

A. Performance and Design Criteria: Where professional design services or certifications by a design professional are specifically required of Contractor by the Contract Documents, provide products and systems complying with specific performance and design criteria indicated.

1. If criteria indicated are not sufficient to perform services or certification required, submit a written request for additional information to Architect.

B. Delegated-Design Services Certification: In addition to Shop Drawings, Product Data, and other required submittals, submit digitally signed PDF electronic file, signed and sealed by the responsible design professional, for each product and system specifically assigned to Contractor to be designed or certified by a design professional.

1. Indicate that products and systems comply with performance and design criteria in the Contract Documents. Include list of codes, loads, and other factors used in performing these services.

PART 3 - EXECUTION

3.1 CONTRACTOR'S REVIEW

A. Submittals: Review each submittal and check for coordination with other Work of the Contract and for compliance with the Contract Documents. Note corrections and field dimensions. Mark with approval stamp before submitting to Architect.

B. Project Closeout and Maintenance Material Submittals: See requirements in Division 01 Section "Closeout Procedures"

C. Approval Stamp: Stamp each submittal with a uniform, approval stamp. Include Project name and location, submittal number, Specification Section title and number, name of reviewer, date of Contractor's approval, and statement certifying that submittal has been reviewed, checked, and approved for compliance with the Contract Documents.

3.2 DELIVERY OF SAMPLES

A. Hand deliver all required physical submittals / samples to AEC offices or project site. Location to be coordinated with Owner's Representative at pre-construction meeting.

AEC
Hoover Building A
326 E. Hoover
University of Michigan
Ann Arbor, Michigan 48109

LANGUAGE BELOW MATCHES STANDARD SUBMITTAL STAMPS USED BY AEC, A&E. OTHER A/E SHOULD EDIT TO MATCH LANGUAGE USED ON THE STAMP THAT WILL BE USED FOR THE PROJECT.

3.3 ARCHITECT'S ACTION

A. Architect's/Engineer's Action: Where action and return is required or requested, Architect/Engineer will review each submittal, mark with "Action", and whenever possible return within 2 weeks of receipt.

1. Final Unrestricted Release: Work may proceed, provided it complies with contract documents.
   a. Marking: "Approved"
2. Final But Restricted Release: Work may proceed, provided it complies with notations and corrections on submittals and with contract documents.
   a. Marking: "Approved as Noted, Resubmission Not Required"
3. Partial Release: Work may proceed on the indicated portions of the submitted item(s), provided it complies with contract documents. Do not proceed with work on items noted to be resubmitted.
   a. Marking: "Partial Approval, Resubmit as Noted."
4. Returned for Re-submittal: Do not proceed with work. Revise submittal in accordance with notations and resubmit without delay to obtain a different action marking.
   a. Marking: "Not Approved, Revise and Resubmit"
5. Returning sample or information: Submittals which were for information only and require no action.
   a. Marking: "Returning Samples / Information"
6. Submittals Not Requiring Action: Submittals which require no action, such as cleaning and maintenance information; or submittals not required and not reviewed, will be acknowledged as follows:
   a. Marking: "Action Not Required"

B. Incomplete submittals are unacceptable, will be considered nonresponsive, and will be returned for resubmittal without review.

C. Submittals not required by the Contract Documents may be returned by the Architect without action.

END OF SECTION 013300

SECTION 013500 - SPECIAL PROCEDURES FOR FIRE MARSHAL REVIEW AND INSPECTION

INCLUDE THIS SECTION FOR ALL PROJECTS - BOTH BFS AND NON-BFS. (CHANGED 4/11/13).

EDIT ONLY AS NOTED

PART 1 - GENERAL

1.1 SUMMARY

A. This Section includes special procedures for Fire Marshal review and inspection for construction projects in University of Michigan buildings under the following jurisdiction:

SELECT ONE OR TWO OF THE FOLLOWING AS APPLICABLE TO PROJECT A LIST OF BFS JURISDICTION BUILDINGS IS AVAILABLE IN 1.0 CODES AND REGULATORY AGENCIES AT THE FOLLOWING LINK:

HTTP://WWW.UMAEC.UMICH.EDU/DESGUIDE/1.0-CODES/DG1.0.PDF

1. State of Michigan Bureau of Fire Services (BFS).
2. University of Michigan Health Environment Health and Safety department, Fire Safety division.
3. State of Michigan Bureau of Fire Services (BFS) for fire alarm and fire suppression work only.

1.2 RELATED DOCUMENTS

RETAIN BELOW FOR BFS PROJECTS.

A. Schedule milestones for BFS project are included in Division 01 section "Construction Progress Documentation".

1.3 SUBMITTALS

INCLUDE ITEM A. BELOW FOR BFS PROJECTS CONTAINING FIRE ALARM OR FIRE SUPPRESSION WORK. ITEMS B AND C APPLY TO ALL PROJECTS.

A. Projects including fire alarm and fire suppression work require submission of the following documents to the State of Michigan BFS. Copies shall be submitted to UM concurrent with submission to BFS:

1. "Application for Fire Safety Plan Examination" for fire alarm and fire suppression work with all supporting documentation and copy of associated fee payment.
2. Signed OFS 12 A with copy of fee payment.

B. Copies of all inspection reports.

C. Final inspection manual as detailed in article 2.1:

1. Draft copy: Submit draft copy to UM Owner's Representative for review concurrent with request for inspection, typically at least four weeks prior to final inspection.
2. Inspection copy: Provide one copy to the Fire Marshal at the final inspection.

3. Final copy: Submit two copies to UM Owner's Representative after final inspection is complete.

1.4 COORDINATION

A. Coordinate scheduling and timing of required administrative procedures, system testing, and inspections with other construction activities to avoid conflicts and to ensure orderly progress of work and inspections.

PART 2 - PRODUCTS

2.1 FINAL INSPECTION MANUAL

A. General: The final inspection manual shall provide the Fire Marshal with information needed to conduct a final inspection.

B. Contents:

RETAIN BRACKETED TEXT FOR BFS PROJECTS

1. Contents of the inspection manual are specific to each project [and include those items noted on the BFS "Plan Review Report"].
2. Typical contents include but are not limited to the following:
   a. Details for each through-penetration firestop system from a qualified testing and inspecting agency.
   b. Notarized affidavits of Compliance for all non-labeled interior finish materials attesting to compliance with the specified flame spread and smoke developed ratings. Affidavits shall state:
      1) Name of product.
      2) Indication that product has been tested by a nationally recognized independent testing laboratory.
      3) Name of testing laboratory.
      4) Laboratory project or test number.
      5) Date of test.
      6) Test results.
      7) Statement that product was installed as tested.
   c. Construction inspection approval certificates for mechanical and electrical construction.
   d. Light level calculations for required emergency lighting.
   e. Final fire alarm approval certificate.

C. Format:

1. Manuals shall be three hole punched and bound.
2. Provide heavy paper dividers with plastic tabs to divide the Manual into sections.
3. Provide a Table of Contents at the front of the Manual. List each tabbed section of the Manual.

PART 3 - EXECUTION (NOT APPLICABLE)

END OF SECTION 013500

SECTION 014200 - REFERENCES

PART 1 - GENERAL

GENERALLY, EDITING OF THIS SECTION IS NOT REQUIRED

1.1 RELATED DOCUMENTS

A. Drawings and general provisions of the Contract, including General and Supplementary Conditions and other Division 01 Specification Sections, apply to this Section.

1.2 DEFINITIONS

A. General: Basic Contract definitions are included in the Conditions of the Contract.

B. "Approved": When used to convey Architect's action on Contractor's submittals, applications, and requests, "approved" is limited to Architect's duties and responsibilities as stated in the Conditions of the Contract.

C. "Directed": A command or instruction by Architect. Other terms including "requested," "authorized," "selected," "required," and "permitted" have the same meaning as "directed." No such implied meaning will be interpreted to extend Architect/Engineer's responsibility into Contractor's area of construction supervision.

D. "Indicated": Requirements expressed by graphic representations or in written form on Drawings, in Specifications, and in other Contract Documents. Other terms including "shown," "noted," "scheduled," and "specified" have the same meaning as "indicated."

E. "Regulations": Laws, ordinances, statutes, and lawful orders issued by authorities having jurisdiction, and rules, conventions, and agreements within the construction industry that control performance of the Work.

F. "Furnish": Supply and deliver to Project site, ready for unloading, unpacking, assembly, installation, and similar operations.

G. "Install": Unload, temporarily store, unpack, assemble, erect, place, anchor, apply, work to dimension, finish, cure, protect, clean, and similar operations at Project site.

H. "Provide": Furnish and install, complete and ready for the intended use.

I. "Or equal": When the phrase "or equal" is used after a single manufacturer's name, or at the end of a list of manufacturer's names, submit proposed products in strict compliance with the "Owner's Options" clauses of the Standard General Conditions.

1. The Owner will consider only those Contractor-proposed substitutions submitted with the Bid in the "Owner's Options" portion of the Form of Proposal.
2. In all cases, judgments of equality of products will be made solely by the Architect/Engineer.

1.3 ABBREVIATIONS AND ACRONYNMS

A. Industry Organizations: Where abbreviations and acronyms are used in Specifications or other Contract Documents, they shall mean the recognized name of the entities indicated in Gale's "Encyclopedia of Associations: National Organizations of the U.S." or in Columbia Books' "National Trade & Professional Associations of the United States" and as follows:

1. "AFF": "Above finished floor" level
2. "Mfr"/"Mfr's": "manufacturer" / "manufacturer's"
3. "NIC": "Not in Contract"
4. "OFCI": "Owner furnished, Contractor installed"
5. "w/": "with"

PART 2 - PRODUCTS (NOT APPLICABLE)

PART 3 - EXECUTION (NOT APPLICABLE)

END OF SECTION 014200

SECTION 015000 - TEMPORARY FACILITIES AND CONTROLS

PART 1 - GENERAL

1.1 SUMMARY

A. This Section includes temporary plumbing and electrical services and provisions for protecting personnel and property.

1.2 QUALITY ASSURANCE

A. Standards and Regulations: Comply with applicable laws and regulations and the following:

1. NFPA Code 241, "Building Construction and Demolition Operations".
2. ANSI-A10 Series standards for "Safety Requirements for Construction and Demolition".
3. NECA Electrical Design Library "Temporary Electrical Facilities".

B. Conditions of Use: Keep facilities clean and neat. Operate in a safe and efficient manner. Take necessary fire prevention measures. Do not allow hazardous, dangerous or unsanitary conditions, or public nuisances to develop or persist on the site.

PART 2 - PRODUCTS

RETAIN BELOW FOR RENOVATION PROJECTS. IDENTIFY ELEVATOR(S) THAT CONTRACTOR MAY USE ON DRAWINGS.

2.1 ELEVATOR USE AND PROTECTION

A. Existing Elevator Use: Use of designated Owner's existing elevator will be permitted, provided elevator is protected, cleaned and maintained in a condition acceptable to Owner. At Substantial Completion, restore elevator to condition existing before initial use, including replacing worn cables, guide shoes, and similar items of limited life.

1. Do not exceed 25% of elevator load capacity with any one piece of material, equipment, or hand truck. Do not exceed elevator load capacity.
2. Provide protective coverings, barriers, devices, signs, or other procedures to protect elevator car and entrance doors and frame. If, despite such protection, elevators become damaged, engage elevator Installer to restore damaged work so no evidence remains of correction work. Return items that cannot be refinished in field to the shop, make required repairs and refinish entire unit, or provide new units as required.
3. Maintain access to the emergency phone, main car operating panel, and emergency escape hatch inside the elevator.
4. Coordinate use with Owner's Representative and provide priority to departmental use.

2.2 CONSTRUCTION FENCE

INCLUDE BELOW WHERE SECURITY IS NOT AN ISSUE

A. Fabricate construction fence of minimum 36-inch tall factory-wired wood slat "snow fence" with water-resistant treated wood support stakes at 48-inches on center.

INCLUDE BELOW WHERE SECURITY IS AN IMPORTANT ISSUE - OR WHERE DESIRABLE TO CONCEAL CONSTRUCTION ACTIVITY FROM VIEW

B. Fabricate construction fence of the following materials:

1. Wire Mesh Fabric: 9 gage galvanized steel wires, woven into 2-inch diamond mesh pattern with top selvages knuckled.
2. Posts: As required for indicated height, but not less than 2.37 outside diameter.

INCLUDE BELOW FOR FENCING INSTALLATIONS ON EXISTING PAVED SURFACES OR OTHER AREAS WHERE SURFACE MOUNTED POSTS ARE PREFERABLE TO POSTS DRIVEN INTO THE GROUND.

3. Fence post base plates: As required for indicated height.

GATES ARE NOT TYPICALLY REQUIRED

4. Gate Frames: 1.90-inch outside diameter. Fabricate gates with 7 gage diagonal tension wires for units wider than 36 inches.

RAILS NOT TYPICALLY REQUIRED, UNLESS NEEDED AS STRUCTURE FOR GATES

5. Rails: Not less than 1.66-inch outside diameter.
6. Hardware: Provide galvanized steel connectors, gate hinges and hasps as recommended by manufacturer.

INCLUDE BELOW ONLY WHERE NEEDED TO BLOCK VIEW OF SITE

7. Screening Material: Vinyl encapsulated polyester fabric; 14 oz. per sq. yd.; grommets spaced 18 inches on center along cloth perimeter for attachment to wire mesh and posts.
   a. Product: "Astrup Phifertex". Color: G01 "Navy".

2.3 ROOF PROTECTION

A. Roofing Protection: Provide protective measures for areas on existing roof used for construction access, where materials are being moved or stored.

B. Provide 1 1/2" ISO insulation with 3/4" plywood over ISO at all areas of work and foot traffic. Plywood is to be tied together.

C. Prevent debris from entering the roof drains by placing filter fabric over the drains. When cleaning is complete remove the filter fabric and properly dispose of collected debris.

PART 3 - EXECUTION

3.1 PERFORMANCE

A. Barriers: In general, provide barriers between active construction operations and completed areas of work, and between construction activity and Owner occupied areas. Provide barriers in locations indicated on drawings, or if not indicated, as required by Owner's Representative.

SELECT BELOW FOR GENERAL DUST BARRIER ONLY.

1. Construct barriers of metal or fire-retardant treated wood studs and 6 mil thick plastic sheet.

1 HOUR BARRIER REQUIRED BETWEEN ACTIVE CONSTRUCTION AREAS AND OCCUPIED AREAS REQUIRED IN ALL BUILDINGS. INCLUDE BELOW AND SHOW ON DRAWINGS.

2. Construct construction barriers serving as separation between active construction areas and occupied areas to provide 1-hour fire-rated assembly as defined by Underwriters Laboratory "Fire-Resistance Directory."

INCLUDE THE FOLLOWING IF DESIRED

3. Provide dust covers over Owner's equipment and furnishings. Use 6 mil thick clear plastic sheet and thoroughly tape seams to provide dust-proof cover.

3.2 TEMPORARY UTILITY INSTALLATION

A. Electrical Service: Comply with NEMA, NECA and UL standards and regulations for temporary electrical service. Install service in compliance with National Electrical Code (NFPA 70). Provide outlets and lighting as required for operations. Comply with applicable provisions of Division-26.

1. Owner will pay for reasonable use of electricity related to the Work.

B. Water Service: Connect to existing building services. Comply with applicable provisions of Division-22.

1. Owner will pay for reasonable use of water related to the Work.

EDIT BELOW TO SUIT PROJECT. ADD OR DELETE REQUIREMENTS AS NEEDED

3.3 PROTECTIONS

A. Openings Between Floors: Shaft and chase spaces may terminate above occupied areas within building. Existing barriers between floors are not designed to prevent debris from falling through to bottom level. Provide appropriate barriers at all unprotected openings between floors during construction operations.

1. Protect openings between floors with appropriate materials, providing full coverage of opening in a manner which will prevent personnel, equipment, construction materials and debris, from falling through; capable of withstanding loads imposed during construction operations; and secured to prevent unintentional removal.

B. Roofing Protection: Provide protective measures for areas on existing roof and around curbed openings during installation of fans or other roof mounted units and areas where materials are being moved or stored.

DELETE BELOW IF NO "SNOW FENCE" CONSTRUCTION FENCE INCLUDED

C. Construction Fence Erection: Drive support stakes into ground not more than 48-inches on center and to sufficient depth to provide support for fencing. Wire pre-fabricated fencing material to stakes.

SELECT BETWEEN FENCING WITH BASE PLATES AND FENCING WITH DRIVEN POSTS. DELETE ALL FENCING REQUIREMENTS BELOW IF NO WIRE MESH CONSTRUCTION FENCE INCLUDED. COORDINATE WITH PM.

FENCING WITH BASE PLATES

D. Construction Fence Erection: Provide fence panels with posts and post base-plates. Do not drive posts into ground, concrete walks or pavement.

1. Fence Panels: 6'-0" high X 12'-0" long max.

INCLUDE BELOW WHERE APPLICABLE

2. Provide hasp and pad lock at each gate.
3. Secure wire mesh to outside face of posts with 9 ga. galvanized metal wire ties spaced not less than 16 inches on center. Install mesh to align with top of posts.

INCLUDE BELOW WHERE APPLICABLE

4. Secure fabric screen to outside face of construction fence using 9 gage galvanized steel wire. Fasten fabric sheets at 18-inches o.c. through grommets to top rail, each line and corner post, and at bottom to wire mesh.

FENCING WITH DRIVEN POSTS

E. Construction Fence Erection: Drive line and corner posts into ground not less than 42 inches below grade, with not less than indicated dimension exposed above grade, and spaced not more than 18 (may use 12 feet if no top rails) feet on center. Erect top rails and gates where indicated.

SELECT ONE OF THE TWO BELOW - USUALLY 8 FEET UNLESS CONSTRUCTION MANAGER REQUESTS GREATER HEIGHT

1. Height of Fence Exposed Above Grade: 8 feet.
2. Height of Fence Exposed Above Grade: 10 feet.

INCLUDE BELOW WHERE APPLICABLE

3. Provide hasp and pad lock at each gate.

4. Secure wire mesh to outside face of posts with 9 ga. galvanized metal wire ties spaced not less than 16 inches on center. Install mesh to align with top of posts.

INCLUDE BELOW WHERE APPLICABLE

5. Secure fabric screen to outside face of construction fence using 9 gage galvanized steel wire. Fasten fabric sheets at 18-inches o.c. through grommets to top rail, each line and corner post, and at bottom to wire mesh.

END OF SECTION 015000

SECTION 015719 – CONSTRUCTION AIR QUALITY

FOR USE ON ALL PROJECTS.

THE CONTENTS OF THE FOLLOWING ARE INTENDED TO BE AN EXAMPLE ONLY AND INCLUDES TYPICAL REQUIREMENTS - MODIFY TO SUIT PROJECT. SOME PROJECTS, PARTICULARLY NEAR THE HOSPITAL MAY HAVE MORE STRINGENT REQUIREMENTS.

PART 1 - GENERAL

1.1 RELATED DOCUMENTS

A. Drawings and general provisions of the Contract, including Standard General Conditions, Supplemental General Conditions, Division 01 Specification Sections, and other applicable Specification Sections, apply to this Section.

CAREFULLY VERIFY, EDIT AND COORDINATE RELATED SECTIONS.

B. Related Sections:

1. Division 23 Section: Custom Air Handling Units.
2. Division 23 Section: Semi-Custom Air Handling Units.
3. Division 23 Section: Air Filters.
4. Division 23 Section: HVAC Ducts and Casings.
5. Division 23 Section: Air Duct Accessories and RGD's.

1.2 SUMMARY

1. This Section includes requirements for construction air quality including diesel exhaust mitigation.

RETAIN BELOW FOR LEED PROJECTS

2. These requirements are also applicable to LEED 2009 IEQ credit 3.1 Construction Indoor Air Quality Management Plan - During Construction.

1.3 QUALITY ASSURANCE

A. Indoor Air Quality Reports: Review periodic Indoor Air Quality Reports provided by others and promptly comply with report recommendations.

B. Inspection and Maintenance: Periodically inspect project conditions to assure that indoor air quality measures are being implemented. Maintain indoor air quality measures to assure operational effectiveness.

PART 2 - PRODUCTS

2.1 AIR FILTRATION

A. Provide air filters or filtration media with a Minimum Efficiency Reporting Value (MERV) of 8 or as specified, whichever is greater.

PART 3 - EXECUTION

3.1 HVAC SYSTEM PROTECTION

A. Protect HVAC systems per Related Sections.

B. Ductwork Contamination: Provide professional cleaning for all ductwork contaminated with construction debris and dust.

3.2 SOURCE/POLLUTION CONTROL

A. Temporary Heat and Hazardous Exhaust: Provide temporary heaters that exhaust combustion air directly to the outside of the building, or that prevents hazardous exhaust levels within the construction area. Limit the use of exhaust producing equipment inside the construction area.

B. Assure exhaust fumes are not drawn into new and existing air intakes.

C. Volatile Organic Compounds (VOC) control: Limit the buildup of VOCs within the construction area by storing VOCs in tight containers, providing ventilation with outside air during installation of VOC emitting material. Locate pollutant sources in one designated area away from supply ducts, areas occupied by workers, and absorbent materials.

D. Smoking is prohibited in all University of Michigan buildings and grounds.

3.3 PATHWAY INTERRUPTION

A. Construction partitions: Provide air tight temporary construction partitions to separate occupied or completed areas from active construction areas.

B. Construction area pressurization: Provide temporary fans or portions of the permanent air handling system to maintain a negative pressure in the construction areas relative to adjacent occupied or completed spaces.

C. Provide construction entry mats at each entry to limit dirt and debris from entering the building.

3.4 HOUSEKEEPING

A. Perform daily housekeeping to prevent the accumulation and tracking of debris, dirt, dust, and moisture within the construction area. Coordinate activities of the various trades to organize work areas to assure that routine cleaning is effective.

B. Provide thorough cleaning of all building interior surfaces prior to HVAC filter replacement, testing and balancing, and commissioning activities.

3.5 SCHEDULING

A. Schedule high pollution activities that utilize high VOC level products such as paints, sealants, adhesives, caulking and cleaners to take place prior to installing highly absorbent materials such as ceiling tiles, carpet, fabric furniture, acoustic panels, insulation, and gypsum board.

B. Where practical, perform high VOC work during off-hours to minimize personnel exposure.

C. Coordinate schedule for installation of low-VOC products with temperature requirements.

D. Schedule delivery to minimize storage requirements of materials on the project site.

1. Where air testing or building flush-out procedures are required, provide adequate time to conduct these activities prior to building occupancy.

3.6 DIESEL EXHAUST MITIGATION

A. All diesel equipment utilized on the project site except delivery trucks shall be fueled with biodiesel B-20. In case of extreme cold weather, biodiesel B-5 is acceptable. Provide records of refueling receipts when requested by the owner.

B. All diesel equipment utilized on the project for more than ten workdays shall utilize exhaust after-treatment devices to reduce emission from diesel engines. Exhaust after treatment devices shall be either diesel oxidation catalyst type or diesel particulate filters. The required minimum percent reduction in emissions for either device shall be, PM: 20%, HC: 40%, CO: 10%.

END OF SECTION 015719

SECTION 016000 - PRODUCT REQUIREMENTS

PART 1 - GENERAL

1.1 SUMMARY

A. This Section specifies administrative and procedural requirements governing the product delivery, storage and handling and Contractor's selection of products for use in the Project.

1.2 QUALITY ASSURANCE

A. Compatibility of Options: When Contractor is given the option of selecting between two or more products for use on the Project, the product selected shall be compatible with products previously selected, even if previously selected products were also options.

1.3 PRODUCT DELIVERY STORAGE AND HANDLING

A. Deliver, store and handle products in accordance with the manufacturer's recommendations, using means and methods that will prevent damage, deterioration and loss, including theft.

MODIFY BELOW TO SUIT PROJECT

1. Schedule delivery to minimize storage time at site and to avoid overcrowding of construction area.
2. Coordinate delivery with installation time to ensure minimum holding time for items that are flammable, hazardous, easily damaged, or sensitive to deterioration, theft and other losses.
3. Deliver products to the site in the manufacturer's original sealed container or other packaging system, complete with labels and instructions for handling, storing, unpacking, protecting and installing.
4. Inspect products upon delivery to ensure that products are undamaged and properly protected.
5. Store heavy materials away from the project structure in a manner that will not endanger the supporting construction.

PART 2 - PRODUCTS

2.1 PRODUCT SELECTION

A. General Product Requirements: Provide products that are undamaged and, unless otherwise indicated, unused at the time of installation.

1. Provide products complete with accessories, trim, finish, safety guards and other devices and details needed for a complete installation and for the intended use and effect.

USUALLY RETAIN ALL BELOW

B. Product Selection Procedures: No substitutions will be permitted, except those in compliance with the Contract Document provisions concerning "Owner's Options"; otherwise comply with the following:

1. Proprietary Specification Requirements: Where a single product or manufacturer is named, provide only the product indicated.
2. Semi-proprietary Specification Requirements: Where two or more products or manufacturers are named, provide one of the products indicated.
   a. Where products or manufacturers are specified by name, accompanied by the term "or equal", or "or approved equal" comply with the Contract Document provisions concerning "Owner's Options."
3. Descriptive Specification Requirements: Where Specifications describe a product or assembly, listing exact characteristics required, with or without use of a brand or trade name, provide only a product or assembly possessing the specified characteristics and that otherwise complies with Contract requirements.
4. Performance Specification Requirements: Where Specifications require compliance with performance requirements, provide products that comply with indicated requirements, and are recommended by the manufacturer for the application indicated.
5. Compliance with Standards, Codes and Regulations: Where Specifications only require compliance with a code, standard or regulation, select a product that complies with the indicated standards, codes and regulations.
6. Visual Matching: Where Specifications require matching an established sample, the Architect's decision will be final on whether a proposed product matches satisfactorily.

PART 3 - EXECUTION (NOT APPLICABLE)

END OF SECTION 016000

SECTION 017300 - EXECUTION

PART 1 - GENERAL

1.1 RELATED DOCUMENTS

A. Drawings and general provisions of the Contract, including General and Supplementary Conditions and other Division 01 Specification Sections, apply to this Section.

1.2 SUMMARY

A. Section includes general administrative and procedural requirements governing execution of the Work including, but not limited to, the following:

1. Installation of the Work.
2. Protection of installed construction.

B. Related Requirements:

1. Section 011000 "Summary" and 011400 "Work Restrictions" for limits on use of Project site.
2. Section 017239 "Cutting and Patching"
3. Section 017700 "Closeout Procedures" for final cleaning.
4. Section 019100 "Project Commissioning" for start-up.
5. Section 024119 "Selective Demolition" for demolition.
6. Section 078413 "Penetration Firestopping" for patching penetrations in fire-rated construction.

1.3 QUALITY ASSURANCE

A. Manufacturer's Installation Instructions: Obtain and maintain on-site manufacturer's written recommendations and instructions for installation of products and equipment.

PART 2 - PRODUCTS (NOT APPLICABLE)

PART 3 - EXECUTION

3.1 EXAMINATION

A. Examination and Acceptance of Conditions: Before proceeding with each component of the Work, examine substrates, areas, and conditions, with Installer or Applicator present where indicated, for compliance with requirements for installation tolerances and other conditions affecting performance. Record observations.

1. Examine rough-in for mechanical and electrical systems to verify actual locations of connections before equipment and fixture installation.
2. Examine walls, floors, and roofs for suitable conditions where products and systems are to be installed.
3. Verify compatibility with and suitability of substrates, including compatibility with existing finishes or primers.

B. Correct defects that would result in unacceptable performance of materials or equipment to be installed.

C. Proceed with installation only after unsatisfactory conditions have been corrected. Proceeding with the Work indicates acceptance of surfaces and conditions.

3.2 PREPARATION

A. Field Measurements: Take field measurements as required to fit the Work properly. Recheck measurements before installing each product. Where portions of the Work are indicated to fit to other construction, verify dimensions of other construction by field measurements before fabrication. Coordinate fabrication schedule with construction progress to avoid delaying the Work.

B. Space Requirements: Verify space requirements and dimensions of items shown diagrammatically on Drawings.

C. Review of Contract Documents and Field Conditions: Immediately on discovery of the need for clarification of the Contract Documents caused by differing field conditions outside the control of Contractor, submit a request for information

3.3 INSTALLATION

A. General: Locate the Work and components of the Work accurately, in correct alignment and elevation, as indicated.

1. Make vertical work plumb and make horizontal work level.
2. Where space is limited, install components to maximize space available for maintenance and ease of removal for replacement.
3. Conceal pipes, ducts, and wiring in finished areas unless otherwise indicated.
4. Install Work within recognized industry tolerances, if not otherwise indicated.

B. Comply with manufacturer's written instructions and recommendations for installing products in applications indicated.

C. Install products at the time and under conditions that will ensure the best possible results. Maintain conditions required for product performance until Substantial Completion.

D. Conduct construction operations so no part of the Work is subjected to damaging operations or loading in excess of that expected during normal conditions of occupancy.

E. Sequence the Work and allow adequate clearances to accommodate movement of construction items on site and placement in permanent locations.

F. Templates: Obtain and distribute to the parties involved templates for work specified to be factory prepared and field installed. Check Shop Drawings of other work to confirm that adequate provisions are made for locating and installing products to comply with indicated requirements.

G. Attachment: Provide blocking and attachment plates, anchors, fasteners, and other devices of adequate size and number to securely anchor each component in place, accurately located and aligned with other portions of the Work. Where size and type of attachments are not indicated, verify size and type required for load conditions.

1. Allow for building movement, including thermal expansion and contraction.
2. Coordinate installation of anchorages. Furnish setting drawings, templates, and directions for installing anchorages, including sleeves, concrete inserts, anchor bolts, and items with integral anchors, that are to be embedded in concrete or masonry. Deliver such items to Project site in time for installation.

H. Mounting Heights: Except as otherwise indicated, mount individual units of Work at industry recognized standard mounting heights for applications indicated. The Contractor shall refer questionable mounting height choices to the Architect/Engineer and the Owner for final decision. The Contractor shall comply with the Owner's and the State of Michigan's requirements for accessible mounting heights.

I. Joints: Make joints of uniform width. Where joint locations in exposed work are not indicated, arrange joints for the best visual effect. Fit exposed connections together to form hairline joints.

J. Adjust, clean, lubricate, restore marred finishes and protect installed Work to ensure that it will remain without damage or deterioration during the remainder of the construction period. Unless otherwise specified by the Contract Documents, all Work is to be thoroughly cleaned prior to its being turned over to the Owner. This includes dusting, window cleaning, floor cleaning and all other operations associated with the proper cleaning of the Work. Waxing or buffing floors shall be performed when required by the Contract Documents.

3.4 PROTECTION OF INSTALLED CONSTRUCTION

A. Provide final protection and maintain conditions that ensure installed Work (completed or in progress) is without damage or deterioration at time of Substantial Completion. Comply with manufacturer's written instructions.

END OF SECTION 017300

SECTION 017329 - CUTTING AND PATCHING

1/08 - CUTTING LEAD BASED PAINT (LBP) SECTION REMOVED PER EHS DIRECTION. ALL PROJECTS THAT IMPACT LBP NEED TO INCLUDE SECTIONS 028300 OR 028333.

PART 1 - GENERAL

1.1 SUMMARY

A. Extent of cutting and patching work is generally not specifically shown on drawings. Include cutting and patching work as indicated by provisions of this Section.

1. Cut holes and openings in, or remove portions of, existing construction necessary for connection of new architectural elements, mechanical and electrical utilities and services, equipment and supports.
2. Patch around mechanical and electrical penetrations.
3. Patch floors, walls, and ceilings damaged by demolition operations, including removal of indicated mechanical and electrical items, and indicated wall-, floor-, and ceiling-mounted items. Patch and paint openings in walls, floors and ceilings created by demolition and removal operations.
4. Patch and repair blemishes and holes in existing construction surfaces left in place, and scheduled to be exposed, that have been damaged due to construction operations.

B. Materials removed and not indicated to be turned over to Owner or indicated for reuse, as well as rubble and debris resulting from these operations, are property of Contractor.

C. Related requirements:

1. General: Refer to other Sections for specific requirements and limitations applicable to cutting and patching individual parts of the work.
2. Division 2 sections for selective demolition, regulated construction waste, asbestos, lead and PCB remediation.
3. Division 21, 22, 23 and Division 26, 27 and 28 sections for other requirements and limitations applicable to cutting and patching mechanical and electrical installations.

1.2 DEFINITIONS

A. Cutting: Removal of in-place construction necessary to permit installation or performance of other work.

B. Patching: Fitting and repair work required to restore construction to original conditions after installation of other work.

1.3 SUBMITTALS

DELETE BELOW IF NO FINISHES PATCHING, EDIT TO BE PROJECT SPECIFIC OR DELETE IF INCLUDED IN INDIVIDUAL DIV 9 SECTIONS.

A. Product data indicating compliance with requirements for the following finish materials used in patching:

1. Acoustical tile.
2. Resilient flooring.
3. Rubber base.

DELETE BELOW IF SAMPLES NOT REQUIRED, EDIT TO BE PROJECT SPECIFIC OR DELETE IF INCLUDED IN INDIVIDUAL DIV 9 SECTIONS.

B. Samples for initial selection for the following:

1. Acoustical tile.
2. Resilient flooring.
3. Rubber base.

DELETE BELOW IF NO ROOFING REPAIR

C. Qualification data for firm engaged to perform cutting and patching of roofing system.

1.4 QUALITY ASSURANCE

A. Assignment of Cutting and Patching Responsibilities:

1. Cutting shall be the work of the individual architectural, mechanical or electrical trade requiring such cutting for access, or to permit alteration to be performed, or similar purposes.
   a. Cutting required for inspection and to obtain test samples shall be the work of the General Contractor.
2. Patching shall be the work of the appropriate architectural trade.

DELETE SUBCATEGORIES THAT DO NOT APPLY TO PROJECT.

B. Cutting and Patching: Comply with requirements for and limitations on cutting and patching of construction elements.

1. Roofing Elements:
   a. Standards: Perform cutting and patching work in compliance with University of Michigan Facilities and Operations standards (phone 647-2059 for information on requirements), and with recommendations of the National Roofing Contractor's Association "Roofing and Waterproofing Manual".
   b. Installer Qualifications: Arrange for cutting and patching of roofing systems by firm experienced in similar work, and licensed by manufacturer of roofing system to perform required repair work.
   c. Pre-Construction Conference: Arrange and attend meeting with Owner's Representative, representative of Owner's roofing maintenance department, and representative of roofing firm to determine procedures for cutting and patching roofing system.

2. Structural Elements: When cutting and patching structural elements, notify Architect of locations and details of cutting before proceeding. Shore, brace, and support structural elements during cutting and patching. Do not cut and patch structural elements in a manner that could change their load-carrying capacity or increase deflection
3. Operational Elements: Do not cut and patch operating elements and related components in a manner that results in reducing their capacity to perform as intended or that results in increased maintenance or decreased operational life or safety.
4. Other Construction Elements: Do not cut and patch other construction elements or components in a manner that could change their load-carrying capacity, that results in reducing their capacity to perform as intended, or that results in increased maintenance or decreased operational life or safety.
5. Visual Elements: Do not cut and patch construction in a manner that results in visual evidence of cutting and patching. Do not cut and patch exposed construction in a manner that would, in Architect's opinion, reduce the building's aesthetic qualities. Remove and replace construction that has been cut and patched in a visually unsatisfactory manner.

PART 2 - PRODUCTS

2.1 MATERIALS

BELOW IS GENERAL STATEMENT. IF SPECIFIC MATERIALS ARE KNOWN, LIST ON FINISH SCHEDULE.

A. Materials for Patching: Unless otherwise indicated, use materials for patching identical to existing materials. If identical materials are not available, or cannot be used, use materials visually matching existing adjacent surfaces to the fullest extent possible and that result in equal-or-better performance characteristics.

B. Asphalt Patching: Provide 8-inch thick 21 AA limestone base, 2-inch No. 1300 leveling course, and 2-inch No. 1300 wearing course in accordance with MDOT 1984 Standard Specifications for Construction.

PART 3 - EXECUTION

3.1 PERFORMANCE

A. Protect existing property, equipment, remaining surfaces, utilities and services within and adjacent to work from damage due to operations. If utilities or services are uncovered that are not indicated on drawings, advise Owner and do not work in immediate area until instructed by Owner.

1. Shore and brace existing construction during cutting operations as required to prevent cracking, movement, or collapse of existing assemblies, surfaces and materials.

B. Use extreme caution when cutting into shafts and chases. Shafts and chases may end above occupied areas within building. Take all necessary precautions to prevent debris from falling into shaft during cutting and patching operations. Comply with requirements of Division 01 Section "Temporary Facilities and Controls".

C. Before cutting and patching the following building elements, obtain the Owner's Representative's approval to proceed:

EDIT THE FOLLOWING TO SUIT PROJECT.

1. Structural concrete.
2. Roofing materials.
3. Miscellaneous structural metals, including lintels and equipment supports.

ALWAYS RETAIN BELOW.

D. Cutting Concrete Floors: Before core drilling, saw-cutting, or breaking up concrete floors, test for the presence of electrical conduits. Use an impulse induction type scanner, similar to Hilti Ferroscan, capable of detecting both metallic conduits and copper wires in PVC conduits. Tracers that scan for energized cables or that scan for injected high frequency signals are not acceptable. Immediately restore, at no cost to the Owner, conduits damaged during cutting operations. Comply with the following notification requirements:

1. Notify the Owner's Representative not less than 72 hours in advance of each core drilling operation. Owner's Representative will arrange notification of building occupants of potential for power outage.
2. Notify the Owner's Inspection Department prior to conducting each test.

E. Patching: Match existing construction. Comply with applicable materials and workmanship requirements of individual sections of these Specifications that govern new work.

1. Patch exposed-to-view surfaces with seams which are durable and as invisible as possible. Create surface finishes matching existing adjacent surfaces in color, texture, gloss and other visual characteristics.
2. Patch all partition, floor, ceiling and roof assemblies to maintain original performance characteristics, including those for fire and acoustical barriers.
   a. Patch fire-rated assemblies using safing materials between the penetrating element and fire-rated assembly. Use safing materials complying with Division 07 Section "Penetration Firestopping" and that will not reduce the fire-rating of the existing assembly.
   b. Patch assemblies to maintain acoustical barrier performance using joint sealing materials between the penetrating element and assembly. Use latex acoustical sealants complying with Division 07 Section "Joint Sealants."

F. Cleaning: Clean areas and spaces where cutting and patching are performed. Remove paint, mortar, oils, putty, and similar materials from adjacent finished surfaces.

END OF SECTION 017329

SECTION 017420 - CONSTRUCTION AND DEMOLITION WASTE TRACKING

FOR USE ON ALL PROJECTS.

PART 1 - GENERAL

1.1 RELATED DOCUMENTS

A. Drawings and general provisions of the Contract, Standard General and Supplementary General Conditions, Division 1 Specification Sections, and other applicable Specification Sections including the Related Sections listed below, apply to this Section.

1.2 SUMMARY

A. This section defines requirements for reporting the disposition of construction and demolition waste/material quantities on all University of Michigan projects.

1.3 REFERENCES

A. Definitions

1. Waste: Removal off-site of demolition and construction materials for deposit to a landfill or incinerator as is acceptable to authorities having jurisdiction.
2. Recycle: Removal off-site of demolition and construction materials to a Recycling Center for processing.
3. Salvage: Removal off-site of demolition or construction materials for subsequent sale or reuse in another application.
4. Waste Manifest: Removal off-site of demolition and construction materials included in the UM-EHS Waste Manifest. Exclude from all calculations.
5. Soils and Excavation: Excavated soils and land-clearing debris. Exclude from all calculations.

1.4 SUBMITTALS

A. Waste Quantities Report: Provide information documenting all types and amounts of demolition and construction materials removed from the project site using the form provided in Part 3.

B. Receipts: Provide records from the salvage and recycling facilities, landfills and incinerators, in as much as available, documenting quantities of materials received by each.

PART 2 - PRODUCTS (NOT USED)

PART 3 - EXECUTION

3.1 IMPLEMENTATION

A. Transmit completed Waste Quantities Report(s) and receipts to c-d-waste-tracking@umich.edu by the time of Substantial Completion.

END OF SECTION 017420

Waste Quantities Report

Project name: _____

U-M project number: _____

Report Date: _____

Name of person completing this report: _____

Contractor - Company Name: _____

Address: _____

Phone #: _____

Waste[1][2][3]:

Waste dumpsters: (Landfilled or incinerated)	_____	**Cubic yards**	_____	**Tons**
Recycled dumpsters: (Dropped off at recycling center)	_____	**Cubic yards**	_____	**Tons**
Salvaged Waste: (Sold or reused)	_____	**Cubic yards**	_____	**Tons**
Totals:	_____	**Cubic yards**	_____	**Tons**

[1] Report shall be completed in the same unit for each category of waste.
[2] Hazardous Waste Manifest and soils and excavation are excluded from all calculations.
[3] Provide receipts when available.

SUBMIT COMPLETED FORM TO c-d-waste-tracking@umich.edu

SECTION 017700 – CLOSEOUT PROCEDURES

PART 1 - GENERAL

1.1 SUMMARY

A. The requirements of this Section are in addition to project closeout requirements indicated in the Standard General Conditions.

1.2 SUBSTANTIAL COMPLETION

A. Prerequisites to Substantial Completion: Complete the following:

1. Submit statement showing changes to Contract Sum. Advise Owner of pending insurance change-over requirements.

1.3 DEFINITIONS

A. Discharge to Ground: Discharge to grassy and/or soil areas capable of water infiltration. Frozen ground conditions are not capable of infiltration.

B. Wash Water: Liquid waste generated during cleaning activities, including mixtures of water and chemicals and/or detergents. It also includes water containing residues of chemicals, detergents, or the substances being removed (i.e., paint, solvents, etc.). It does not include runoff from cleaning with only potable water that has not come into contact with chemicals or detergents.

1.4 FINAL CLEANING

A. Final Cleaning: Immediately before turning project over to Owner, wash and clean all parts of the Work. Remove tools and equipment, construction debris, rubbish, and surplus materials.

1. Clean interior and exterior surfaces of window units and glass within the limits of construction area, including the following:

SELECT PARA ABOVE OR BELOW, OR DELETE BOTH IF NO GLASS IN PROJECT.

2. Clean interior surfaces of window units and glass within the limits of construction area.

INCLUDE SUBPARA BELOW WITH EITHER PARA ABOVE. SELECT ONE OF THE FOLLOWING THREE OPTIONS.

a. New window units and glass installed under Contract.
b. Existing window units and glass repaired under Contract.
c. Existing window units and glass not installed or repaired under Contract.

B. Disposal of Wash Water from Activities Outside Buildings:

1. Protect storm drains and catch basins. Do not allow runoff from cleaning activities that is discharged to ground to leave the site.

2. Utilize one of the following two procedures to handle wash water generated from detergent or chemical cleaning.
    a. Obtain approval from the Michigan Department of Environmental Quality (MDEQ) for contractor to discharge to the ground by "authorization by notification" as a mobile power washer. Do not reference University of Michigan in application.
        1) Contact UM Environment, Health and Safety department (EHS) - Environmental Protection & Permitting at 734-936-1920 for information on discharge to ground.
    b. Collect wash water and sample to determine proper disposal method.
        1) Contact UM EHS-HazMat at 734-763-4568.
        2) Allow adequate lead time for sampling, analysis and disposal coordination.

PART 2 - PRODUCTS (NOT APPLICABLE)

PART 3 - EXECUTION (NOT APPLICABLE)

END OF SECTION 017700

SECTION 017823 – OPERATION AND MAINTENANCE MANUALS

PART 1 - GENERAL

SPEC EDITORS: ***EXCEPT AS NOTED, DO NOT EDIT THIS SPEC SECTION. INCLUDE IT ON ALL PROJECTS INVOLVING SYSTEMS, EQUIPMENT OR MATERIALS THAT REQUIRE OPERATION OR MAINTENANCE FOR SAFETY, SUCCESSFUL PERFORMANCE, LONGEVITY, OR PRESERVATION OF WARRANTIES.***

1.1 SUMMARY

A. This Section defines the Contractor's requirements for providing four approved paper copies of Operation and Maintenance (O&M) Manuals.

1. Contractors installing equipment pre-purchased by the project (AHU's, chillers, substations, generators, etc.) shall provide O&M Manuals for the pre-purchased equipment assigned to them for installation.
2. Contractors installing or relocating equipment furnished by the Users (lab equipment, audio/visual equipment, etc.) need not provide O&M Manuals for User-furnished equipment.

1.2 RELATED DOCUMENTS

A. Refer to the U-M Standard General Conditions and other Division 01 Specification Sections for requirements which apply to this Section.

B. Special operation and maintenance data requirements referenced in the other Technical Specification Sections apply to this Section.

1.3 SCHEDULE

A. Submit a draft O&M Manual for approval soon after construction start.

B. Submit one completed copy for approval as soon as it is completed.

C. Provide four approved O&M Manuals for Owner use a minimum of two weeks prior to scheduled Owner training.

D. Submission of four approved O&M Manuals is a prerequisite for Substantial Completion and final payment.

1.4 CONTENTS

A. The O&M Manuals shall provide the Owner's maintenance personnel with the information they need to install, inspect, test, operate, clean, lubricate, maintain, adjust, repair and replace the project's systems and equipment.

B. The O&M Manuals shall include information on the following:

ARCHITECTURAL LEAD: ***ADD TO OR DELETE FROM THE FOLLOWING LIST TO MAKE IT PROJECT SPECIFIC. ADD ARCHITECTURAL ITEMS REQUIRING MAINTENANCE USING SPECIAL CLEANERS, PRESERVATIVES, PROCEDURES, ETC.***

1. Divisions 02 Through 14: Systems and equipment items include but are not limited to:
   a. Power operated doors, windows, fire shutters, roof hatches, and related items.

b. Operable partitions.
c. Electric signs and graphics systems.
d. Motorized projection screens and projector lifts.
e. Fume hoods, bio-safety cabinets and snorkels.
f. Laboratory plumbing and electrical fixtures specified as part of laboratory casework.
g. Laboratory equipment including ventilated cages, sterilizers, glass washers, tunnel washers, cage and rack washers, bedding dispensers/disposers, water bottle fillers, and auto watering systems.
h. Darkroom equipment.
i. Motorized shades and blinds.
j. Dock levelers and truck restraint systems.
k. Trash compactors
l. Controlled environment rooms.
m. Elevators and barrier-free lifts.
n. Food service equipment.

MECHANICAL LEAD ENGINEER: ADD TO OR DELETE FROM THE FOLLOWING LIST TO MAKE IT PROJECT SPECIFIC.

2. Divisions 21, 22 and 23: Systems and equipment items include but are not limited to:
a. Tunnel piping, valves, expansion joints, and loops.
b. Building piping, valves, expansion joints, and loops.
c. Meters and gauges.
d. Heat trace systems.
e. Motors, motor controllers, and variable frequency drives.
f. Water treatment systems.
g. Fire protection systems.
h. Piping and plumbing specialties.
i. Hot and cold domestic water systems.
j. Sanitary and laboratory waste systems.
k. Grease interceptors/separators.
l. Rainwater and storm sewer systems.
m. Irrigation systems.
n. Purified and RO/DI water systems.
o. Pumps.
p. Medical and specialty gas systems.
q. Natural gas systems.
r. Fuel oil storage and transfer systems.
s. Hot water heating systems.
t. Boilers.
u. Chilled water systems.
v. Chillers.
w. Cooling towers.
x. Condenser water systems.
y. Steam and condensate systems.
z. Engine-generator exhaust systems.
aa. Sand filters.
bb. Humidifiers.
cc. Heat exchangers.
dd. Terminal heating and cooling units.
ee. Energy recovery systems.
ff. Free cooling systems.
gg. Smoke evacuation systems.
hh. Stairwell pressurization systems.
ii. Point exhaust systems.
jj. Laboratory vacuum systems.

kk. Compressed air systems.
ll. Control air systems.
mm. Exhaust air systems.
nn. HVAC systems.
oo. Air handling units.
pp. Fans.
qq. Pressurization control systems.
rr. Mechanical systems controls.
ss. Laboratory and fume hood controls.
tt. Clean room controls.
uu. Kitchen Hoods.
vv. Kitchen exhaust controls.
ww. Fan coil units.
xx. DX systems.
yy. Computer room HVAC systems.
zz. Saw dust collection systems.

ELECTRICAL LEAD ENGINEER: ADD TO OR DELETE FROM THE FOLLOWING LIST TO MAKE IT PROJECT SPECIFIC.

3. Divisions 26, 27 and 28: Systems and equipment items include but are not limited to:
   a. Primary power distribution.
   b. Unit substations.
   c. Secondary power distribution and metering.
   d. Engine-generators, transfer switches and load banks.
   e. Paralleling switchgear.
   f. Motor starters and controls.
   g. Wiring devices.
   h. Grounding.
   i. Normal and emergency lighting.
   j. Lighting control and dimming systems.
   k. Lighting individual controls.
   l. Voice & data systems.
   m. Emergency and campus telephones.
   n. Audio/visual systems.
   o. Room scheduler systems.
   p. Master clocks.
   q. Access control systems.
   r. Security and CCTV systems.
   s. Fire detection and alarm systems.
   t. Emergency responder radio coverage systems.
   u. MOSCAD (Motorola SCADA alarm transmitter to DPSS).

1.5 DOCUMENTATION REQUIREMENTS

A. Provide complete information regarding the installation, inspection, testing, operation, cleaning, lubrication, maintenance, and adjustment of the equipment supplied, including data needed to facilitate maintenance in accordance with the warranty requirements, and data needed to order an exact replacement or the approved spare parts. Manufacturers' sales literature and similar promotional materials shall not be included.

B. Documentation shall be project specific. Edit manufacturers' standard documentation to reflect the exact equipment supplied. Circle or draw an arrow toward information that applies. Cross out information that does not apply. Do not highlight information because highlighting cannot be photocopied. Documentation that is not properly marked will be rejected.

C. Drawings may be reduced in size as long as they are still legible.

D. When documentation on a system or assembly includes data from more than one manufacturer, provide complete data on each component. Assemble the data into one tabbed section of the Manual.

1.6 IDENTIFICATION

A. In the Table of Contents and in each tabbed section, identify each system and equipment item using the same name designation used in the Contract Documents.

PART 2 - PRODUCTS (NOT APPLICABLE)

PART 3 - EXECUTION

3.1 PREPARATION

A. Soon after construction starts, submit one draft O&M Manual for approval. This draft Manual shall consist of labeled binders with a Table of Contents and the divider tabs.

B. Throughout the construction process, gather operation and maintenance documentation and enter the data into the binders. Bring the Manual to Commissioning Meetings when requested to do so.

3.2 BINDERS

A. Bind O&M Manual in commercial quality, "D-ring", loose leaf binders with durable and cleanable plastic covers. Maximum binder ring size shall be 4 inches.

B. Label both the front and the spine of each binder with "Operation and Maintenance Manual", the Project Name, the U-M Project Number, the Contractor's name, and the Contractor's Project Number.

C. When multiple binders are required to assemble one Manual, label both the front and the spine of each binder with the number of the binder, the quantity of binders in the Manual (i.e. 3 of 5), and the contents of the binder (i.e. Plumbing). Provide on the inside cover of each binder a complete list of the binders (i.e. Volume 1 – Architectural, Volume 2 – Elevators, Volume 3 - Plumbing, etc.).

3.3 TABLE OF CONTENTS

A. Provide a Table of Contents at the front of the Manual. List each tabbed section of the Manual. List the system and equipment names and numbers contained within each tabbed section.

B. When multiple binders are required to assemble one Manual, provide a Table of Contents at the front of each binder.

3.4 CONTENTS

A. Arrange the O&M Manual in order by specification section. Provide heavy paper dividers with plastic tabs to divide the Manual into sections with a separate section for each system. Divide a section into tabbed subsections when the section contains documentation on multiple major equipment items. Permanently mark each tab to identify the contents of the section.

B. Three hole punch 8-1/2" x 11" to 11' x 17" documents and insert them directly into the Manual. Fold documents larger than 8-1/2" x 11" appropriately. Provide transparent plastic sleeves to enclose drawings, charts, booklets, brochures, computer software media, and other off-size documentation. Do not store any documentation in the inside pockets of the binder covers.

C. In the front portion or first binder of the Manual, provide the following documents:

1. For systems requiring Federal or State inspections such as elevators and fire alarm systems, a copy of the inspection report and approval certificate for each system.
2. A copy of the valve tag schedule.
3. A list of the local suppliers (with addresses and telephone numbers) for each piece of equipment.
4. A list of the warranty service contacts (with addresses and telephone numbers) for each piece of equipment.
5. A list of the periodic maintenance activities that must be performed to retain warranty coverage.
6. For equipment with warranties in excess of one year, a copy of the extended warranty information.
7. For equipment with a service agreement, a copy of the service agreement and a list of the service agreement contacts (with addresses and telephone numbers).

D. In the middle portion of the Manual in separate tabbed sections, provide the following project-specific documents:

1. Complete operation and maintenance instructions for each system and major equipment item.
2. Except for minor equipment, complete manufacturer's nameplate data.
3. Pump curve for each pump.
4. Flow curve for each flow element (pitot tube, triple duty valve, circuit setter, etc.).
5. Fan curve for each fan.
6. Clean and dirty filter pressure drops for each filter.
7. Short circuit analysis with overcurrent protective device settings and fuse sizes.
8. Exploded assembly views with references to part numbers.
9. List of manufacturers' recommended spare parts.

E. In the back portion of the Manual, provide the following documents:

1. Signed factory representatives' startup reports.

F. In plastic sleeves in the back of the Manual, provide the following drawings for use during a building emergency:

1. Record copies of the elevator schematic wiring diagrams.
2. Record copies of the fire protection system piping schematics.
3. Record copies of the temperature control schematics.
4. Record copies of the power one line and riser diagrams.
5. Record copies of the fire alarm and security system wiring diagrams.

3.5 SUBMISSION

A. To avoid delaying Owner training, Substantial Completion and final payment, complete the O&M Manual as early in the construction process as possible.

B. Submit one paper copy of the Manual for Owner review and approval.

C. Incorporate the Owner's review comments into the submitted Manual and prepare three more paper copies.

D. Submit four approved O&M Manuals for distribution by the AEC Facilities Information Center.

END OF SECTION 017823

SECTION 019100 – PROJECT COMMISSIONING

REVISION HISTORY:

JULY 2016: REVISED TO ESTABLISH 019100 AS THE SOLE SPECIFICATION FOR CX.ING, ALLOWING 019110 "SMALL" PROJECT COMMISSIONING TO BE RETIRED.

ARCHITECT/ENGINEER: EDIT THE FOLLOWING ARTICLES TO MAKE THIS SPECIFICATION PROJECT SPECIFIC: 1.1.B, 1.2.B. REVISE 3.1.N IF NECESSARY, SEE THE EDITOR'S NOTE AT THAT LOCATION. EDIT ARTICLE 1.2.B TO LIST ALL EQUIPMENT AND SYSTEMS TO BE COMMISSIONED INCLUDING PREPURCHASED AND OWNER FURNISHED EQUIPMENT. CLARIFY WITH THE DESIGN MANAGER EXACTLY WHICH OWNER FURNISHED EQUIPMENT IS TO BE COMMISSIONED. GENERALLY OWNER FURNISHED EQUIPMENT IS NOT COMMISSIONED. IF A COMMISSIONING AUTHORITY (CXA) HAS BEEN HIRED FOR THE PROJECT, REQUEST THE CXA REVIEW YOUR EDITED VERSION OF THIS SPECIFICATION AND INCORPORATE ANY INPUT RECEIVED.

PART 1 - GENERAL

1.1 RELATED DOCUMENTS

A. The Drawings and the general provisions of the Contract, including the Standard General Conditions and the Supplemental General Conditions, apply to this Section.

EDIT THE BELOW SPECIFICATION SECTION NUMBERS. U-M MASTER SPECIFICATION SECTION 017823 SHALL BE USED AS THE O&M MANUAL SPECIFICATION.

B. Refer to other Division 01 Specification Sections, including the following, for related requirements which apply to this Section.

1. Division 01 Section – Project Management and Coordination.
2. Division 01 Section – Submittal Procedures.
3. Division 01 Section – Operation and Maintenance Manuals.

C. Testing, balancing, commissioning, operation and maintenance manual, and Owner training requirements referenced in the other Technical Specification Sections apply to this Section.

1.2 SUMMARY

A. Each Contractor shall perform the commissioning activities for the systems, equipment and materials they install. When the equipment and materials are part of a larger system, each Contractor shall commission their portion of the work as part of the overall system commissioning. The commissioning activities will be coordinated by the University's Commissioning Authority (CxA). Perform the commissioning activities as outlined in Part 3, "Execution" and as described in the U-M "Generic Sample Commissioning Plan" available for review at http://www.umaec.umich.edu/wp-content/uploads/2013/08/Sample-Cx-Plan-Master.pdf . Where terms, procedures, forms, etc. are indicated in this specification, the requirements for such items shall be as described in the U-M "Generic Sample Commissioning Plan".

B. Perform commissioning activities on the following:

ADD TO OR DELETE FROM THE FOLLOWING LIST TO MAKE IT PROJECT SPECIFIC.

1. Divisions 02 through 14: Systems and equipment include but are not limited to:
   a. Power operated doors, windows, fire shutters, roof hatches, and related items.
   b. Operable partitions.
   c. Electric signs and graphics systems.
   d. Motorized projection screens and projector lifts.
   e. Fume hoods, bio-safety cabinets and snorkels.
   f. Laboratory plumbing and electrical fixtures specified as part of laboratory casework.
   g. Laboratory equipment including ventilated cages, sterilizers, glass washers, tunnel washers, cage and rack washers, bedding dispensers/disposers, water bottle fillers, and auto watering systems.
   h. Darkroom equipment.
   i. Motorized shades and blinds.
   j. Dock levelers and truck restraint systems.
   k. Trash compactors
   l. Controlled environment rooms.
   m. Elevators and barrier-free lifts.
   n. Food service equipment.

ADD TO OR DELETE FROM THE FOLLOWING LIST TO MAKE IS PROJECT SPECIFIC.

2. Divisions 21, 22 and 23: Systems and equipment include but are not limited to:
   a. Tunnel piping, valves, expansion joints, and loops.
   b. Building piping, valves, expansion joints, and loops.
   c. Meters and gauges.
   d. Heat trace systems.
   e. Motors, motor controllers, and variable frequency drives.
   f. Water treatment systems.
   g. Fire protection systems.
   h. Piping and plumbing specialties.
   i. Hot and cold domestic water systems.
   j. Sanitary and laboratory waste systems.
   k. Grease interceptors/separators.
   l. Rainwater and storm sewer systems.
   m. Irrigation systems.
   n. Purified and RO/DI water systems.
   o. Pumps.
   p. Medical and specialty gas systems.
   q. Natural gas systems.
   r. Fuel oil storage and transfer systems.
   s. Hot water heating systems.
   t. Boilers.
   u. Chilled water systems.
   v. Chillers.
   w. Cooling towers.
   x. Condenser water systems.
   y. Steam and condensate systems.
   z. Engine-generator exhaust systems.
   aa. Sand filters.

bb. Humidifiers.
cc. Heat exchangers.
dd. Terminal heating and cooling units.
ee. Energy recovery systems.
ff. Free cooling systems.
gg. Smoke evacuation systems.
hh. Stairwell pressurization systems.
ii. Point exhaust systems.
jj. Laboratory vacuum systems.
kk. Compressed air systems.
ll. Control air systems.
mm. Exhaust air systems.
nn. HVAC systems.
oo. Air handling units.
pp. Fans.
qq. Pressurization control systems.
rr. Mechanical systems controls.
ss. Laboratory and fume hood controls.
tt. Clean room controls.
uu. Kitchen Hoods.
vv. Kitchen exhaust controls.
ww. Fan coil units.
xx. DX systems.
yy. Computer room HVAC systems.
zz. Saw dust collection systems.

ADD TO OR DELETE FROM THE FOLLOWING LIST TO MAKE IT PROJECT SPECIFIC.

3. Divisions 26, 27 and 28: Systems and equipment items include but are not limited to:
   a. Primary power distribution.
   b. Unit substations.
   c. Secondary power distribution and metering.
   d. Engine-generators, transfer switches and load banks.
   e. Paralleling switchgear.
   f. Motor starters and controls.
   g. Wiring devices.
   h. Grounding.
   i. Normal and emergency lighting.
   j. Lighting control and dimming systems.
   k. Lighting individual controls.
   l. Voice & data systems.
   m. Emergency and campus telephones.
   n. Audio/visual systems.
   o. Room scheduler systems.
   p. Master clocks.
   q. Access control systems.
   r. Security and CCTV systems.
   s. Fire detection and alarm systems.
   t. Emergency responder radio coverage systems.
   u. MOSCAD (Motorola SCADA alarm transmitter to DPSS).

1.3 SUBMITTALS

A. Provide the Commissioning Authority with the lists, forms, drawings, plans, reports, and manuals described in Part 3, “Execution”.

PART 2 - PRODUCTS (NOT APPLICABLE)

PART 3 - EXECUTION

3.1 COMMISSIONING ACTIVITIES

A. Attend regularly scheduled Commissioning Team meetings, separate from other project meetings and occurring at intervals deemed appropriate by the CxA. Typically meetings will be held one per month at the beginning, increasing to one per week for the last third of the project.

1. Solely when dictated by the CxA, on some projects the Commissioning Team meetings will be held as part of regular project construction meetings.

B. Attend additional commissioning meetings including but not limited to:

1. Pre-start meetings.
2. Functional test preparation meetings.
3. Pre-balance conferences.
4. Water treatment meetings.

C. Maintain one all-inclusive Commissioning Plan and keep it up-to-date.

COMMISSIONING AUTHORITY: MAINTAIN A SECOND COPY OF THE COMMISSIONING PLAN.

1. The Commissioning Plan shall be used to store all of the documents produced during the commissioning process. Maintain the Commissioning Plan in the construction office.
2. An initial draft of the Commissioning Plan will be prepared and delivered to the Contractor by the CxA soon after construction starts.
3. Provide to the CxA a complete list of trade contractor, major manufacturer, and major supplier contact information for inclusion in the Commissioning Plan.
4. The CxA will develop project-specific commissioning forms for inclusion in the Cx Plan, along with other required documents. Each Contractor shall complete, sign, and insert into the Commissioning Plan the portion of each form that relates to their work. The types of documents required for this project include but are not limited to:
   a. Commissioning meeting minutes.
   b. Interim and final commissioning reports.
   c. Installation Sequences.
   d. Commissioning Status Check Sheets.
   e. Pre-Installation Check Sheets.
   f. Pipe Flushing and Cleaning Forms.
   g. Duct Leak Test Reports.
   h. Pre-Start Check Sheets.
   i. Mfr.’s reports documenting equipment start-up.
   j. Equipment Functional Test Check Sheets.
   k. System Functional Test Check Sheets.
   l. Training plans and training attendance sheets.

5. Provide one copy of the following documents to the CxA for systems or equipment being commissioned when such tests are required by other specification sections:
   a. Manufacturers' factory test reports.
   b. Field inspection and test reports.
   c. Manufacturers' check-test-start reports.
6. Provide a detailed list of every control point installed. Include, in checklist format, a detailed procedure to verify all aspects of the controls' operational sequence.
7. Insert the original of each form or document in the Commissioning Plan and provide a copy of each to the CxA.

D. Assist with establishing the order, timing, and duration of the commissioning activities, and add them to the Project Schedule.

E. During the shop drawing submittal process, submit one set of shop drawings for all systems and equipment being commissioned to the CxA for review.

1. Submit the shop drawings at the same time they are submitted to the A/E for review.
2. The CxA assists the A/E in reviewing submittals and will not return comments directly back to the contractor.
3. After completion of the review, provide to the CxA one set of the A/E reviewed and stamped shop drawings for all systems and equipment being commissioned.

F. At the time of shop drawing submittal, provide to the CxA installation manuals for the systems and equipment being commissioned.

G. Soon after construction starts, submit one draft Operation and Maintenance (O&M) Manual in accordance with the related specification section.

H. Submit duct leak testing plans and calculations prior to leak testing each section of duct. No testing shall commence until the plan and calculations are approved by the CxA.

I. Submit pipe flushing and cleaning plans for each systems for CxA approval at least 2 weeks prior to the first flushing and cleaning activities.

J. Submit electrical test reports for CxA approval at least 2 weeks prior to equipment energization.

K. Provide at least 2 weeks advance notification of the following activities:

1. Coordination drawing meetings. The CxA may attend.
2. Duct leak tests. The CxA must witness duct leak tests unless waived by the CxA.
3. Pipe flushing and cleaning of each system or portion of each system. The CxA must witness flushings and cleanings unless waived by the CxA.
4. Manufacturer check-test-starts. The CxA may attend.
5. Functional tests. The Commissioning Authority must witness and approve all functional tests.
6. Owner training sessions.

L. Check, test, and start up each system in accordance with the Manufacturer's instructions.

1. The Pre-Start Check Sheets shall be submitted and approved prior to starting up systems and equipment. This applies both to early starts for construction use and to full startups before functional testing.
2. Where required by the Project Specifications or by the Manufacturer, startup shall be performed by a Manufacturer's Representative. Provide a copy of the completed equipment start up form used by the Manufacturer's Representative during start up.

M. Functionally test each piece of equipment and system to verify proper function in all modes of operation. Coordinate with other trades so all modes of operation can be demonstrated. Each Contractor shall demonstrate the portion of the work they provided.

1. Test each system component, zone, and control sequence.
2. Test under both full and partial loads.
3. Test under normal, abnormal, and emergency conditions.
4. Test under design basis seasonal conditions.

FOR SMALL PROJECTS, CONSIDER IN CONSULTATION WITH THE COMMISSIONING AUTHORITY IF THE 20% RANDOM FUNCTIONAL TESTING LIMIT SPECIFIED BELOW IS ADEQUATE AND REVISE IF APPROPRIATE. IF THE COMMISSIONING AUTHORITY HAS YET TO BE HIRED, CONSULT WITH THE U-M MANAGER OF COMMISSIONING AND PLAN REVIEW THROUGH THE U-M DESIGN MANAGER. NORMALLY FOR PROJECTS WITH SMALL QUANTITIES OF TERMINAL UNITS, PLUMBING FIXTURES, ETC. THIS SECTION SHOULD BE REVISED TO SPECIFY THAT ALL UNITS BE FUNCTIONALLY TESTED.

N. Functional testing shall include:

1. 100 percent of all major equipment
2. 100 percent of terminal units that are controlled in any way by occupancy sensors.
3. 100 percent of terminal units or zones that provide temperature, humidity, pressure, or similar control outside of what would be the design criteria for a typical office, e.g. those serving museum, special storage, or similar spaces.
4. 100 percent of terminal units serving any space designated as a lab.
5. Random functional testing of no less than 20% of fan coil units, VAV boxes, chilled beams, plumbing fixtures, lighting occupancy sensors, and similar high unit count equipment. If the quantity is 25 units or less, no less than 5 units shall be functionally tested. If significant issues are found, randomly functional test in additional increments of 10% until no significant issues are found. The CxA shall designate the specific units to be tested.

O. When requested by the CxA, provide trend logs of the controlled variables for all central equipment, and for any zone or terminal unit serving spaces with specific temperature, humidity, or pressure setpoints. For systems or equipment determined not to be operating properly by the CxA, provide logs for any additional control points requested, for trouble-shooting purposes.

1. Trend logs shall begin once each functional test is complete, and continue until the equipment or system is accepted by the CxA.

2. The sampling interval and the required frequency of providing trend logs shall be as required by the CxA.

P. Correct the incomplete and non-conforming items that were identified during the commissioning process.

1. Deficiencies that affect system operation must be corrected prior to functional testing.
2. Deficiencies discovered during or after functional testing must be corrected prior to acceptance of the systems by the CxA.

Q. At the same time they are submitted to the A/E for review, submit a copy of each Air and Water Balance Test Report to the CxA for review.

R. Provide four reviewed and approved paper copies of O&M Manuals in accordance with the O&M Manual specification section a minimum of two weeks prior to scheduled Owner training.

S. Arrange for and participate in Owner training sessions for the systems and equipment being commissioned.

1. Assist the CxA in developing a training plan. Submit for CxA approval a master list of all training sessions at least 30 days in advance of the proposed first training session. Include systems and equipment, area served, agenda, duration, time and location of each training session. The CxA will develop the final training plan which the contractor shall comply with. Dates and times of each session shall be as convenient for the Owner.
   a. A training session may include several common types of similar systems or typical equipment that all Trainees have involvement with. Standard AHU's, fans, and ductwork can all be covered in one air handling systems training session. General lighting systems and typical power distribution systems can be covered in one electrical systems training session.
   b. Keep unique, large or complex systems and equipment in their own training sessions (e.g. fume hoods, lab exhaust controls, emergency power systems, or large lab exhaust systems must be separate from a general air handling systems training session).
2. Define each training session as either overview training or specific system/equipment training.
   a. Overview training shall provide the design intent and general operation of each system and its equipment, including interactions with other systems and equipment. Overview training is generic in nature and at a level that is consistent with the level of Trainee's knowledge.
   b. Specific system/equipment training shall include the overview followed by more detail. It is intended to expand the Trainee's specific knowledge of a particular system or equipment. Specific system/equipment training generally only applies when special training requirements are referenced in other Technical Specification Sections.
3. Training sessions shall occur after the system and equipment have passed functional testing, and after final approved O&M Manuals have been provided to the Owner.
   a. Invite Manufacturers' representatives when required by other Technical Specification Sections or when required due to the complexity of the system or equipment.

b. Provide the appropriate design and coordination as-built drawings and O&M Manuals for each training session.

4. Conduct the training at the system or equipment. For specific system/equipment training, also conduct classroom training when specified or appropriate.
   a. In conjunction with the CxA, provide overview training on the system and equipment.
   b. Review the contents of the O&M Manual as it relates to the Training Session.
   c. Walk down each system with the Trainees. Indicate the locations and explain the operation of basic system components such as isolation valves, drains, vents, expansion compensators, distribution piping, flow meters, electrical panels, motor controls, disconnects, lighting controls, fire alarm and security devices, roof hatch access, etc.
   d. For specific system/equipment training, also provide the following:
      1) Meanings of alarms, indicators, and warning signs.
      2) Operating procedures under all normal, abnormal and emergency modes of operation.
      3) Maintenance procedures including cleaning, lubricating and adjustment procedures.
      4) Inspection, troubleshooting and repair procedures.
   e. After each training session, insert a copy of the agenda and completed sign-in sheet into the Commissioning Plan.

T. Submit the completed Commissioning Plan to the CxA for approval.

END OF SECTION 019100

UNIVERSITY OF MICHIGAN
ARCHITECTURE, ENGINEERING AND CONSTRUCTION

ARCHITECTURE & ENGINEERING
326 East Hoover, Mail Stop B
Ann Arbor, MI 48109-1002
Phone: 734-764-3414
Fax: 734-936-3334

BuildingName
The Description of the Project
P00000000 0000

SPECIFICATION DIVISION 2

NUMBER SECTION DESCRIPTION

DIVISION 02 EXISTING CONDITIONS
SECTION 024119 - SELECTIVE DEMOLITION

END OF CONTENTS TABLE

DIVISION 02 EXISTING CONDITIONS
SECTION 024119 - SELECTIVE DEMOLITION

5/6/2014 -- EDITED TO ADD DEFINITIONS SECTION AND MORE CLOSELY ALIGN WITH STANDARD REFERENCE SPECIFICATION SECTION.

PART 1 - GENERAL

1.1 RELATED DOCUMENTS

A. Drawings and general provisions of the Contract, including General and Supplementary Conditions and Division 01 Specification Sections, apply to this Section.

1.2 SUMMARY

A. Work of this Section includes the following:

1. Demolition work of existing construction and building elements indicated on Drawings or by provisions of this Section.
2. Salvage of existing items to be reused or recycled.

B. Related work of other Sections includes the following:

DELETE BELOW IN CONSULTATION WITH MECHANICAL ENGINEER OR IF NO A/C EQUIPMENT OR PIPING DEMOLITION IS INCLUDED IN PROJECT.

1. Refrigerant handling requirements are specified in Division 01 Section "Work Restrictions."

DELETE BELOW IN CONSULTATION WITH MECHANICAL ENGINEER OR IF NO FUME HOOD DUCTWORK DEMOLITION IS INCLUDED IN PROJECT.

2. Fume hood ductwork demolition requirements are specified in Division 01 Section "Work Restrictions."

USUALLY RETAIN BELOW.

3. Safety barriers and temporary closures are specified in Division 01 Section "Temporary Facilities and Controls."

RETAIN BELOW FOR REROOFING PROJECTS INVOLVING TEAROFF OF EXISTING ROOF.

4. Installation of new roofing system after removal of existing roof is specified in Division 07.

DELETE BELOW IF NO ASBESTOS WORK IN PROJECT.

5. Removal and disposal of asbestos-containing materials is specified in Division 02 Section "Asbestos Remediation."

DELETE BELOW IF NO SPECIAL LEAD PRODUCT REMOVAL WORK.

6. Removal and disposal of lead-containing materials is specified in Division 02 Section "Lead Products Remediation – Renovation, Repair and Painting in Child Care Facilities and Target Housing."

DELETE BELOW IF NO LIGHT FIXTURE DEMOLITION WORK IN PROJECT.

7. Removal and disposal of fluorescent lamps and ballasts is specified in Division 26 Section "Basic Electrical Requirements."

1.3 DEFINITIONS

INCLUDE TERMS THAT APPLY TO PROJECT.

A. Remove: Detach items from existing construction and dispose of them off-site unless indicated to be salvaged or reinstalled.

B. Remove and Salvage: Detach items from existing construction, in a manner to prevent damage, and deliver to Owner ready for reuse or store as noted on Drawings.

C. Remove and Reinstall: Detach items from existing construction, in a manner to prevent damage, prepare for reuse, and reinstall where indicated.

D. Existing to Remain: Leave existing items that are not to be removed and that are not otherwise indicated to be salvaged or reinstalled.

E. Dismantle: To remove by disassembling or detaching an item from a surface, using gentle methods and equipment to prevent damage to the item and surfaces; disposing of items unless indicated to be salvaged or reinstalled.

1.4 MATERIALS OWNERSHIP

A. Unless otherwise indicated, demolition waste becomes property of Contractor.

B. Historic items, relics, antiques, and similar objects including, but not limited to, cornerstones and their contents, commemorative plaques and tablets, and other items of interest or value to Owner that may be uncovered during demolition remain the property of Owner.

1. Carefully salvage in a manner to prevent damage and promptly return to Owner.

1.5 SUBMITTALS

A. Landfill Records: Indicate receipt and acceptance of demolished material by a landfill facility authorized to accept such material.

1.6 QUALITY ASSURANCE

A. Notify the Michigan Department of Environmental Quality as required by law, of demolition work, including work that does not involve asbestos abatement work.

1.7 WARRANTY

RETAIN BELOW FOR WORK IMPACTING ROOFS UNDER WARRANTY. CONTACT PLANT REGIONAL ASSET MANAGER TO VERIFY IF ROOF IS UNDER

WARRANTY. MOST ROOFS LESS THAN 15 YEARS OLD ARE UNDER WARRANTY.

A. Existing Warranties: Remove, replace, patch, and repair materials and surfaces cut or damaged during selective demolition, by methods and with materials and using approved contractors so as not to void existing warranties. Notify warrantor before proceeding. Existing warranties include the following:

1. Roof system

B. Notify warrantor on completion of selective demolition, and obtain documentation verifying that existing system has been inspected and warranty remains in effect. Submit documentation at Project closeout.

PART 2 - PRODUCTS (NOT APPLICABLE)

PART 3 - EXECUTION

3.1 DEMOLITION, GENERAL

A. Carry out all demolition work in a neat and orderly manner. Keep noise, dust, and similar nuisances to a minimum. Do not collapse walls. Do not throw or drop materials.

1. Where material indicated to be removed is suspected of containing asbestos, inform Owner's Representative immediately. Do not disturb materials suspected of containing asbestos until asbestos content has been verified by Owner.

INCLUDE BELOW WHEN SHAFTS WILL BE CUT INTO FOR ARCHITECTURAL, MECHANICAL OR ELECTRICAL WORK.

2. Use extreme caution when cutting into shafts and chases. Shafts and chases may end above occupied areas within building. Take all necessary precautions to prevent debris from falling through openings between floors during demolition operations. Comply with requirements of Division 01 Section "Temporary Facilities and Controls".

RETAIN ARTICLES B & C AS APPLICABLE TO PROJECT

B. Removed and Salvaged Items:

1. Clean salvaged items.
2. Pack or crate items after cleaning. Identify contents of containers.
3. Store items in a secure area until delivery to Owner.

INCLUDE LOCATION IN BUILDING IF KNOWN OR INDICATE LOCATION IN ANOTHER BUILDING IF APPLICABLE.

4. Transport items to Owner's storage area location in building.
5. Protect items from damage during transport and storage.

C. Removed and Reinstalled Items:

1. Clean and repair items to functional condition adequate for intended reuse.
2. Pack or crate items after cleaning and repairing. Identify contents of containers.
3. Protect items from damage during transport and storage.
4. Reinstall items in locations indicated. Comply with installation requirements for new materials and equipment. Provide connections, supports, and miscellaneous materials necessary to make item functional for use indicated.

D. Existing Items to Remain: Protect construction indicated to remain against damage and soiling during selective demolition. When permitted by Owner's Representative, items may be removed to a suitable, protected storage location off-site during selective demolition and reinstalled in their original locations after selective demolition operations are complete.

3.2 PROTECTION

A. Temporary Protection: Provide temporary barricades and other protection required to prevent injury to people and damage to adjacent materials to remain.

1. Provide protection to ensure safe passage of people around selective demolition area and to and from occupied portions of building.
2. Provide temporary weather protection, during interval between selective demolition of existing construction on exterior surfaces and new construction, to prevent water leakage and damage to structure and interior areas.
3. Protect existing utilities and services indicated to remain in service and protect them against damage during demolition operations.
4. Protect walls, ceilings, floors, and other existing finish work that are to remain or that are exposed during selective demolition operations.
5. Cover and protect furniture, furnishings, and equipment that have not been removed.
6. Patch, repair or replace materials and items accidentally damaged during demolition operations.

RETAIN THE PARAGRAPH BELOW FOR REROOFING PROJECTS.

7. Re-roofing Project Demolition: Removal of existing roofing materials shall not expose more of the underlying construction than can be recovered in one day with the specified roofing system.
8. Comply with requirements for temporary enclosures, dust control, heating, and cooling specified in Section 015000 "Temporary Facilities and Controls."
   a. Confine dust and debris to immediate area of demolition activity to the greatest extent practicable.

B. Temporary Shoring: Design, provide, and maintain shoring, bracing, and structural supports as required to preserve stability and prevent movement, settlement, or collapse of construction and finishes to remain, and to prevent unexpected or uncontrolled movement or collapse of construction being demolished.

1. Strengthen or add new supports when required during progress of selective demolition.

C. Remove temporary barricades and protections where hazards no longer exist.

3.3 DEMOLITION OF ARCHITECTURAL FINISHES

A. General: Demolish and remove existing construction only to the extent required by new construction and as indicated. Use methods required to complete the Work within limitations of governing regulations and as follows:

1. Neatly cut openings and holes plumb, square, and true to dimensions required. Use cutting methods least likely to damage construction to remain or adjoining construction. Use hand tools or small power tools designed for sawing or grinding, not hammering and chopping, to minimize disturbance of adjacent surfaces. Temporarily cover openings to remain.
2. Cut or drill from the exposed or finished side into concealed surfaces to avoid marring existing finished surfaces.
3. Do not use cutting torches without written permission from Owner's Representative. Comply with provisions of the Standard General Conditions and Owner's rules and procedures.
4. Locate selective demolition equipment and remove debris and materials so as not to impose excessive loading on supporting walls, floors, or framing.
5. Dispose of demolished items and materials promptly.

B. Remove all loose material from partially demolished work leaving only sound and secure construction.

INCLUDE THE FOLLOWING WHEN PLASTER REPAIR MAY BE REQUIRED

1. Plaster: Remove loose plaster that will be exposed in finished construction. Loose plaster is defined as plaster material of at least 2 inches by 4 inches in size that can be moved by touch or that sounds hollow when lightly tapped with a hammer.

INCLUDE THE FOLLOWING WHEN CARPET OR RESILIENT FLOORING WILL BE REMOVED

2. Flooring: Where shown, scheduled or otherwise required for application or installation of new floor finishes or coverings, remove existing flooring tile, resilient sheet flooring as follows:
   a. Remove all traces of existing flooring materials. Remove resilient sheet and tile flooring products in compliance with recommended methods of Resilient Floor Covering Institute "Recommended Work Practices for Removal of Resilient Floor Coverings."
   b. Remove adhesives, except those containing asbestos. Use chemical strippers approved by manufacturer of new flooring materials, or grind concrete floor surfaces to completely remove adhesive. Obtain Owner's Representative's approval of removal method prior to beginning removal work.

c. Do not remove vinyl composition tile or adhesives suspected of containing asbestos. Owner will verify asbestos content of questionable materials. Removal of asbestos-containing adhesives (if any) is included in Division 02 Section "Asbestos Abatement."
d. Clean floor slabs of dust and adhesive residue.

3.4 DEMOLITION OF CONCRETE OR ASPHALT

A. Water used during concrete and asphalt work (including sweeping and saw-cutting) must be contained and collected for proper disposal. Do not discharge water containing dust or debris from concrete or asphalt work into storm drains, catch basins or to the sanitary sewer system.

3.5 DISPOSAL OF DEMOLISHED MATERIALS

A. Remove demolition waste materials from Project site and dispose of them in an EPA-approved construction and demolition waste landfill acceptable to authorities having jurisdiction.

1. Remove and transport debris in accordance with the Standard General and Supplemental General Conditions.

INCLUDE THE PARAGRAPHS BELOW IF DEMOLISHED ACOUSTICAL PANELS AND TILE ARE TO BE RECYCLED. THIS IS A VIABLE ECONOMIC OPTION IF COST OF SEPARATING ACOUSTICAL TILE FROM THE REST OF CONSTRUCTION DEBRIS IS MINIMAL. USG, ARMSTRONG AND BPB ALL HAVE RECYCLING PROGRAMS AND WILL PICK UP PROPERLY PREPARED PANELS FREE OF CHARGE IF THE TYPE OF TILE IS RECYCLABLE. SEE ALSO COMMENTS IN SECTION 095100.

3.6 RECYCLING OF MATERIALS

A. Acoustical ceiling panels and tile.

1. Coordinate with requirements for accepting materials by acoustical ceiling manufacturer selected to supply materials under Division 09 Section "Acoustical Ceilings."
2. Neatly stack large clean pieces on wooden pallets. Shrink wrap pallets or bind with straps.
3. Notify manufacturer when collection and wrapping of materials is complete and ready for pickup.
4. Store in a protected location accessible to manufacturer for pickup.

3.7 SELECTIVE DEMOLITION SCHEDULE

RETAIN THIS ARTICLE IF DRAWINGS DO NOT SHOW ALL SELECTIVE DEMOLITION NOTES AND LISTS. SEE "DEFINITIONS" ARTICLE FOR DEFINITION OF TERMS.

A. Remove and Salvage:

BELOW ARE SEVERAL STANDARD ITEMS. EDIT TO BE PROJECT SPECIFIC

1. Ancillary Materials: Where mechanical or electrical devices are indicated to be demolished, legally dispose of ancillary materials.

EDIT BELOW TO SUIT PROJECT.

a. Lubricant oils: Contact UM EHS Hazardous Materials (734-763-4568) to arrange for proper disposal of lubricant oils.

2. Remove cylinders from locksets removed during demolition operations. Turn cylinders over to Owner's Key Office.

3. <Insert description of items to remove and salvage>.

B. Remove and Reinstall:

BELOW IS A STANDARD ITEM. EDIT TO BE PROJECT SPECIFIC

1. Remove cylinders from locksets removed during demolition operations. Turn cylinders over to Owner's Key Office.

2. <Insert description of items to remove and reinstall>.

"EXISTING TO REMAIN" PARAGRAPH BELOW MAY BE USED TO INFORM CONTRACTOR OF ITEMS THAT ARE TO REMAIN, SUCH AS THOSE THAT OCCUR IN, OR ARE ADJACENT TO, CONSTRUCTION BEING DEMOLISHED, BUT ARE NOT BEING REMOVED AND REINSTALLED. RETAIN PARAGRAPH IF REQUIRED.

C. Existing to Remain:

1. <Insert description of items to remain>.

"DISMANTLE" PARAGRAPH BELOW MAY BE USED TO INFORM CONTRACTOR OF ITEMS ATTACHED TO VALUABLE SUBSTRATES THAT REQUIRE SPECIAL CARE IN REMOVAL. INSERT ADDITIONAL REQUIREMENTS IF ITEMS ARE TO BE SALVAGED OR REUSED; OTHERWISE ITEMS ARE TO BE DISPOSED.

D. Dismantle:

1. <Insert description of items to be removed>.

END OF SECTION 024119

UNIVERSITY OF MICHIGAN

BuildingName
The Description of the Project
P00000000 0000

SPECIFICATION DIVISION 2

NUMBER SECTION DESCRIPTION

DIVISION 02 EXISTING CONDITIONS
SECTION 028110 – REGULATED CONSTRUCTION WASTE REMEDIATION

END OF CONTENTS TABLE

DIVISION 02 EXISTING CONDITIONS
SECTION 028110 – REGULATED CONSTRUCTION WASTE REMEDIATION

SECTION ADDED 9/04

THIS SECTION DESCRIBES REQUIREMENTS FOR REMOVAL AND DISPOSAL OF REGULATED CONSTRUCTION WASTE, I.E., CONSTRUCTION WASTE THAT CANNOT BE DISPOSED OF WITH TYPICAL NON-HAZARDOUS CONSTRUCTION AND DEMOLITION DEBRIS. THIS APPLIES TO BUILDING ITEMS INCLUDING BUT NOT LIMITED TO MERCURY-CONTAINING EQUIPMENT, BATTERIES, SELF-LUMINESCENT EXIT SIGNS, FIRE EXTINGUISHERS AND BULK CLEANERS, PAINTS ETC. THAT WILL BE DISTURBED/REMOVED DURING DEMOLITION OR RENOVATION.

THE A/E MUST CONTACT OSEH EARLY IN THE DESIGN PHASE FOR A SURVEY OF REGULATED BUILDING WASTE TO BE DISTURBED/REMOVED.

1.1 SUMMARY

A. This Section specifies requirements for the removal, staging and disposal of Regulated Waste, including but not limited to the following:

ALWAYS INCLUDE THE FOLLOWING PARAGRAPHS.

1. Mercury-containing articles and equipment, including but not limited to controls, thermometers, thermostats, switches, manometers and gauges.
2. Batteries, including but not limited to lead-, nickel- and or mercury-containing batteries from exit signs, smoke detectors and backup power sources.
3. Smoke detectors.
4. Self-luminescent exit signs.
5. Containers of paint and paint related materials, cleaners, pesticides, compressed gas cylinders and above ground and below ground fuel tanks and portable fuel cans.
6. Fire extinguishers.
7. Electronic Waste, including but not limited to TVs, computers, monitors, printers and any other electronics containing a circuit board.
8. Hazardous or Liquid Industrial Waste.

B. Extent of regulated building waste is as follows:

1. As identified in the survey.
2. As identified by the Contractor during demolition or construction.

1.2 RELATED SECTIONS

DELETE PARAGRAPHS BELOW WHICH DO NOT APPLY TO THE PROJECT.

A. Asbestos abatement is covered in Division 02 Sections "Asbestos Remediation"; "Asbestos Remediation - Floor Tile and Mastic"; and "Asbestos Remediation - Roofing Material".

B. Removal of lead products is covered in Division 02 Sections "Lead Remediation" and "Lead Remediation – Renovation, Repair and Painting in Child Care Facilities and Target Housing".

C. PCB disposal is covered in Division 02 Section "PCB Remediation".

D. Selective demolition is covered in Division 02 Section "Selective Demolition".

E. Refrigerant handling and disposal is covered in Division 01 Section "Work Restrictions".

F. Lamp and ballast recycling is covered in Division 26 Section "Basic Electrical Requirements".

1.3 DEFINITIONS

A. The term "Construction and Demolition Debris" refers to Non-Hazardous Waste generated during construction, renovation and demolition projects.

B. The term "Regulated Waste" refers to building equipment or materials that will be demolished as part of a renovation or construction project, but cannot be disposed of as typical Construction and Demolition Debris

C. The term "EHS" refers to Owner's Environment, Health and Safety Department, 1239 Kipke Drive, Ann Arbor, MI 48109-1010, phone (734) 763-4568.

D. The term "Project Site" indicates the limits of the project site as indicated on drawings or by provisions of this specification.

1.4 QUALITY ASSURANCE

A. Contractor personnel must be thoroughly familiar with the following information:

1. Proper methods for removal and staging of regulated waste. See PART 3, 3.2, A-E of this Section for requirements.
2. Proper response in case of an emergency spill or leak. See PART 3, 3.2, F of this Section for requirements.

PART 2 - PRODUCTS (NOT APPLICABLE)

PART 3 - EXECUTION

3.1 NOTIFICATION

A. Contact EHS immediately if fuel tanks or laboratory chemicals are discovered. EHS Hazardous Materials Program personnel will arrange for proper removal and disposal of these materials.

3.2 REMOVAL AND STAGING OF WASTE

A. Regulated Waste must be removed and staged in an intact state in an area easily accessible by EHS Hazardous Materials Program personnel (loading dock).

B. Store waste containers and other staged waste in a secure area (preferably a locked room) at the project site. Labels shall remain visible and shall be legible. Waste containers shall be inspected daily for leaks, closure, labeling and container integrity. Set containers securely on a hard surface which is accessible to EHS drum carts. Do not stage containers on lawns, dirt piles, gravel drives, areas with mud or basement areas with no elevator access.

C. Place mercury-containing articles and equipment **ONLY** in EHS provided containers. Remaining waste types do not need to be containerized, but must be staged in a neat and orderly fashion and grouped by waste type (i.e. all batteries staged together, all paint staged together, etc.) Obtain empty containers from the EHS North Campus Transfer Facility, 1655 Dean Road. Contact the EHS Hazardous Materials Program at 734-763-4568 at least three working days in advance to request pick-up of pails and/or drums.

D. Do not mix Regulated Waste with trash, and construction debris. Contractor shall be responsible for costs incurred by the Owner for disposing of foreign items mixed with Regulated Waste. **DO NOT DISPOSE OF ANY REGULATED WASTE IN THE REGULAR SOLID WASTE. DO NOT DISPOSE OF ANY LIQUIDS IN THE REGULAR SOLID WASTE.**

E. Handle mercury-containing articles and equipment with extreme care to prevent the release of elemental mercury. Mercury-containing articles and equipment shall be cushioned to prevent breakage. Leave enough space at the top of each container for the installation of lids. Ensure that the lid is secured tightly. Use duct tape or another strong tape if necessary to secure the lid.

F. If elemental mercury is accidentally spilled due to the breakage of a mercury-containing article or equipment, immediately evacuate the area to limit exposure and contact the EHS Hazardous Materials Program at 734-763-4568 (M-F, 8AM-5PM) or after hours the University of Michigan Department of Public Safety (DPS) 734-763-1131. DPS will notify UM EHS On-Call staff to respond to the scene and clean up the mercury.

1. Without walking through the spill area, close off the area and restrict access to the spill site by locking doors to the room or taping off the area. Avoid tracking the material to other areas of the site.
2. Remain at the project site until EHS or DPS personnel arrive at the scene.

3.3 DISPOSAL OF WASTE

A. Disposal of regulated construction waste shall be done in coordination with EHS.

1. Contact EHS at least one week in advance to request pick-up of the containers.
2. EHS will package, pickup and dispose of properly staged Regulated Waste at no cost to the contractor. Call the EHS Hazardous Materials Program at 734-763-4568 to schedule a pickup immediately after regulated waste has been staged.

END OF SECTION 028110

UNIVERSITY OF MICHIGAN
ARCHITECTURE, ENGINEERING AND CONSTRUCTION

ARCHITECTURE & ENGINEERING
326 East Hoover, Mail Stop B
Ann Arbor, MI 48109-1002
Phone: 734-764-3414
Fax: 734-936-3334

BuildingName
The Description of the Project
P00000000 0000

SPECIFICATION DIVISION 2

NUMBER SECTION DESCRIPTION

DIVISION 02 EXISTING CONDITIONS
SECTION 028213 - ASBESTOS REMEDIATION

END OF CONTENTS TABLE

DIVISION 02 EXISTING CONDITIONS
SECTION 028213 - ASBESTOS REMEDIATION

PART 1 - GENERAL

1.1 SUMMARY

A. This Section includes removal and disposal of asbestos-containing materials by full enclosure, glove bag, or entire structures methods as applicable. Demolition and debris removal of all asbestos-containing materials identified by provisions of this Section, or shown on drawings, or identified at the site, shall be executed under the provisions of this Section, and other applicable sections of these specifications.

B. Extent of asbestos removal work is as follows:

1. Indicated on drawings.
2. Surveyed and listed in "Schedule of Items Containing Asbestos" Article in Part 3 of this Section.
3. Surveyed and listed in "Schedule of Items Containing Asbestos" Article in Part 3 of this Section, as specified in related sections, and as indicated on the drawings. Proceed with Work of this Section simultaneously, and in coordination with, remaining Work of the Project.
4. Marked at the site during the pre-bid inspection "walk through".
5. Limited to that required to connect new plumbing work to existing piping.

1.2 RELATED SECTIONS

A. Unit price items are scheduled with related units of measure in Division 01 Section "Unit Prices."

B. Work of this Section that is affected by alternates is described in Division 01 Section "Alternates."

C. Demolition and removal of items not containing asbestos as a component is included in Division 02 Section "Selective Demolition."

D. Pipe re-insulation is included in Division 23 Section "Mechanical Insulation."

1.3 DEFINITIONS

A. Asbestos Abatement Firm: Firm engaged to perform actual removal and disposal work, either as Contractor or subcontractor.

B. Asbestos Containing Material: The term "asbestos containing material" is abbreviated ACM.

C. Owner's Consultant: Firm engaged by Owner to identify and measure asbestos containing materials, or to inspect demolition operations, including monitoring of air quality.

D. EHS: Owner's Environment, Health & Safety Department, 1239 Kipke Drive, Ann Arbor, MI 48109-1010; phone (734) 647-1143.

1.4 SUBMITTALS

A. Initial Submittals: Submit the following documents to Owner's Representative at the pre-abatement meeting:

1. License from the State of Michigan in accordance with Act 135 P.A. 1986 (Asbestos Abatement Contractors Licensing Act).
2. Copy of notification sent to appropriate federal, state, and local agencies.
3. Schedule of removal, specifying work locations, length and number of shifts, foreman's name, and crew size.
4. Disposal Site Certification: Letter, signed by the Contractor, certifying that an approved asbestos-accepting type II landfill will be used for disposal. Include the facility name, address, and phone number.

B. Waste Disposition Submittals: Submit to ESH signed waste shipment record stating that asbestos waste has been properly disposed. Submit the following:

1. Receipts (trip tickets) from approved landfill.
2. Asbestos Waste Shipment Record: As follows:
   a. Prior to removing asbestos-containing material from the project site, provide Owner's Representative or Owner's consultant with a completed waste shipment record fully complying with Section 61.150 of the NESHAP standard, and 49 CFR Part 172.200 of the U.S. Department of Transportation, and including all required information.
   b. Ensure that the landfill operator provides a signed copy of the waste shipment record to EHS within 35 days of the date that asbestos-containing material is removed from the project site. If waste is not transported directly from the project site to the landfill, the waste shipment record shall reflect each transfer.
   c. The Owner will not make final payment prior to receipt of signed waste shipment record.

C. Contract Closeout Submittals: Comply with the following additional requirements of Division 01 Section "Closeout Procedures":

1. Asbestos Quantity Removal Report: Submit 3 copies of asbestos quantity removal report to Owner's Representative at least 4 weeks prior to Contractor's application for final payment. Include information in the following format:
   a. Quantities of Asbestos Removed:
      1) Asbestos insulation removed from _____ft. of_____ inch diameter pipes.
      2) _____ square feet of asbestos insulation removed from ducts, chiller surfaces, equipment, etc.
      3) _____ square feet of asbestos-containing debris removed from project area.
      4) _____ square feet of asbestos-containing floor covering.
2. Statement of Visual Inspection: Prior to application for final payment, submit to EHS a statement of visual inspection signed by the Contractor's competent person/supervisor. Include the following:
   a. Name of licensed contractor conducting work.

b. Name, signature, and title of on-site supervisor.
c. Name, location, and start and finish date of abatement work.
d. Current date.
e. Statement that the work was completed according to applicable federal, state, and local laws, and these specifications.
f. Statement that the Asbestos Abatement Firm's field supervisor has visually inspected the work site and has found no dust, debris, or other suspect asbestos-containing materials that were part of the scope of work.

1.5 QUALITY ASSURANCE

A. Pre-Qualified Asbestos Abatement Firms: Engage one of the following pre-qualified firms to perform abatement of asbestos containing materials:

1. 21st Century Salvage, Inc.
2. Adamo Demolition Company
3. Advanced Industrial Services, LLC
4. Asbestos Abatement, Inc.
5. Bierlein Companies, Inc.
6. Building Decommission Services, LLC.
7. Certified Abatement Services, Inc.
8. Detroit Dismantling Corporation
9. Environmental Assurance Company, Inc.
10. Environmental Maintenance Engineers
11. Environmental Specialty Services, Inc.
12. Global Green Service Group
13. Great Lakes Environmental Service, Inc.
14. Homrich
15. Michigan Mechanical Abatement, Inc.
16. MIS Corporation-Michigan
17. National Environmental Group, LLC
18. Next Generation Environmental, Inc.
19. North American Dismantling Corp.
20. Omega Demolition Corporation
21. Pro-Tech Environmental & Construction, Inc.
22. Professional Thermal Systems, Inc.
23. Qualified Abatement Services, Inc.
24. Quality Environmental Services, Inc.
25. Trust Thermal Abatement, Inc.

B. Regulatory Requirements: Make all necessary notifications to the appropriate federal, state, and local agencies.

1. The National Emission Standards for Hazardous Air Pollutants (NESHAP), Asbestos regulation 40 CFR 61, Sub-Part M requires that if at least 80 lin. meters (260 lin. ft.) of friable asbestos materials, at least 15 sq. meters (160 square feet), or 1 cu. meter (35 cu. ft.) of friable asbestos materials, or other facility components are stripped or removed while renovating a facility, all the requirements of section 61.147 apply.

2. When applicable, notify the Michigan Department of Environmental Quality (MDEQ), the Michigan Department of Licensing and Regulatory Affairs (MDLARA), and appropriate state and local regulatory agencies. No work shall be conducted without notification of authorities having jurisdiction.

C. Pre-Abatement Meeting: Approximately 2 weeks prior to scheduled start of the abatement project, the Owner's Representative will hold a pre-abatement meeting with the individuals indicated below:

1. Contractor' representative.
2. Asbestos Abatement Firm's representative.
3. EHS representative.
4. Owner's consultant.
5. Owner's Representative.
6. Owner's building maintenance personnel.

D. The meeting agenda will include:

1. Review of the scope of work.
2. Removal methods to be used.
3. Review of Contractor's initial submittals.
4. A walk-through survey of the site, if appropriate.

E. For small projects, the meeting may be suspended at the discretion of the Owner's Representative. If the meeting is suspended, deliver required initial submittals to the Owner's Representative's office 2 weeks prior to the start of work.

PART 2 - PRODUCTS (NOT APPLICABLE)

PART 3 - EXECUTION

3.1 ASBESTOS ABATEMENT, GENERAL

A. Conduct asbestos abatement operations in a manner that fully protects Contractor's and subcontractor's employees, the general public, and building occupants from exposure to asbestos and other safety and health hazards.

1. Asbestos abatement projects shall be directly supervised by a competent person as described in 29 CFR 1926.1101.
2. The supervisor/competent person must complete responsibility checklists throughout all phases of the project.

B. Protect adjacent areas, materials and surfaces from damage due to demolition operations, including but not necessarily limited to the following:

1. Water damage.
2. Dirt, dust and debris.
3. Abrasion.
4. Cuts and scratches.
5. Holes from fasteners for temporary barriers.

C. All asbestos work shall be conducted within a regulated area that complies with the following requirements:

1. Post a sufficient number of signs required by 29 CFR 1926.1101 at the asbestos abatement area and at every work area entrance, so that tenants, Owner's personnel, and other contractor's employees have an opportunity to take protective measures before exposing themselves to asbestos. Place banners if necessary to secure open areas. Include information on signs indicating location and quantity of asbestos-containing material.
2. Allow only authorized, properly protected personnel to enter the regulated area. Immediately report unauthorized individuals entering the work area to EHS or the Owner's consultant.

D. When required, provide employees and inspectors authorized to enter the regulated area with protective work clothing consisting of disposable Dupont "Tyvek" (or equivalent) full body coveralls, head covers, boots, and other necessary safety gear, including a hard hat and eye protection.

E. Provide respiratory protection to employees as required by current OSHA regulations including 29CFR 1910.134 and 1926.1101.

1. Provide asbestos abatement workers with powered air purifying respirators (PAPR) with full facepiece and HEPA filters for adequate protection during asbestos material removal operations. Respiratory protection may be down-graded if negative exposure assessment indicates that less protection is required.
2. A half-face respirator or PAPR must be worn while tearing down and setting up enclosures, while glovebagging, and during pre-cleaning and post-cleaning work.
3. Do not allow respirators to be pulled away from faces while in the work area.
4. Maintain an extra PAPR unit on site at all times for the duration of the abatement project.
5. Provide full facepiece supplied-air respirators operated in pressure demand mode equipped with air auxiliary and pressure self-contained breathing apparatus or HEPA egress filters if required for measured fiber concentrations.

F. Maintain at each job site and post the following documents:

1. Copy of MDEQ/MDLARA notification.
2. Employee respiratory protection program.
3. Michigan Right-To-Know poster.
4. Material Safety Data Sheet locator.
5. Company standard operating procedure.
6. This specification Section.
7. Material Safety Data Sheets for products used on job.
8. CFR 1926.1101.
9. CFR, Part 61 (NESHAP).
10. The foreman's or supervisor's Contractor/Supervisor Accreditation Certificate.
11. State of Michigan Accreditation Certificates and Medical Approval for each worker.

G. Use the following engineering controls and work practices for all asbestos abatement operations, regardless of measured exposure levels:

1. Vacuum cleaners equipped with HEPA filters to collect all asbestos-containing dust and debris.
2. Wet methods to control exposures during asbestos removal and clean-up, except where proven to be infeasible.
3. Prompt clean-up and disposal of asbestos-contaminated wastes and debris in leak-proof containers.
4. Establish a decontamination area, adjacent and connected to the regulated area, if the Project requires the removal of more than 25 lin. ft., or 10 sq. ft. of thermal systems insulation or surfacing ACM.
5. Establish an equipment area adjacent to the regulated area if the Project requires the removal of less than 25 lin. ft. or 10 sq. ft. of thermal systems insulation or surfacing ACM.

H. Do not use any of the following equipment or work practices during asbestos abatement operations, regardless of measured exposure levels:

1. High-speed abrasive disc saws not equipped with point-of-cut HEPA ventilation or HEPA filtered exhaust air enclosures.
2. Blowing with compressed air to remove asbestos-containing materials.
3. Dry sweeping, shoveling, or other dry methods to clean up asbestos-containing dust and debris.
4. Employee rotation as a means of reducing employee exposure to asbestos.

3.2 ASBESTOS REMOVAL BY FULL ENCLOSURE METHOD

A. Preparation of the Work Area: Complete the following preparation work prior to beginning asbestos removal operations:

1. Install critical barriers over each opening into the regulated area. The following requirements are in addition to, not in lieu of, other indicated surface and object protection requirements:
   a. Seal each opening between the work area and adjacent areas with not less than 2 layers of 4-mil polyethylene sheeting. Use an expanding-polyurethane foam gun to seal areas with large numbers of pipes, conduits and beams. Openings include, but are not necessarily limited to, windows, skylights, doorways, elevator hoistway openings, corridor entrances, drains, ducts, grills, grates, and diffusers.
   b. Seal intake and exhaust vents and duct seams within the regulated area with not less than 2 layers of 6-mil polyethylene sheeting.
2. HVAC System Shutdown: Owner's maintenance personnel will shut down heating, cooling, and air conditioning systems when necessary. Coordinate scheduling with Owner's personnel and provide 72 hours notice to the Owner's Representative prior to planned shut-down.
3. Protection of Surfaces and Objects: The following requirements are in addition to, not in lieu of, indicated work area sealing requirements. Cover the following surfaces and objects as follows:

a. Protect all surfaces beneath all removal activity. Remove moveable objects from the work area, and cover fixed objects with impermeable dropcloths or plastic sheeting with edges securely sealed with tape.
b. Cover open tanks with plywood or other solid material.
c. Provide clean, fresh air to mechanical equipment, where required to maintain proper performance of equipment.
d. Fully pre-clean all covered surfaces with amended water and a HEPA vacuum.
e. Cover walls with not less than 2 layers of 4-mil polyethylene sheeting. Construct free-standing enclosure walls of not less than 6-mil polyethylene sheeting, with supports spaced not more than 3 feet o.c.
f. Cover floors with not less than 2 layers of 6-mil polyethylene sheeting. Avoid seams where possible. If seams are necessary, overlap not less than 12 inches and tape joints. Extend sheeting 12 inches up the side walls leaving no seams at the wall and floor joint. Immediately repair punctures and leaks, and clean up seepage.

4. Cleaning: Do not use cleaning methods that raise dust, such as sweeping or using vacuum cleaners not equipped with HEPA filters. Do not disturb asbestos materials during pre-cleaning phases.
   a. Treat water removed from the enclosure as asbestos contaminated waste. Fully seal floor drains.
5. Deactivate or install ground-fault circuit interrupters on each electrical circuit within the enclosure.
6. Construct a three-chambered decontamination facility that is adjacent to and connected to the regulated area, and that consists of a dirty room, a shower room, and a clean room in series. Construct decontamination facilities that are exposed to weather of lumber and exterior grade plywood. Secure the facility when not in use.
   1) Supply the equipment room with properly labeled, impermeable bags and containers for the containment and disposal of contaminated protective equipment.
   2) Construct showers that comply with the requirements of 29 CFR 1910.141 (d) (3), with the shower room adjacent to both the equipment room and the clean room. Filter water waste and shower water through a 5 micron filter, or remove water from site as asbestos waste.
   3) Equip the clean room with a locker or appropriate storage container for each employee.
7. Employee Decontamination Facilities: Comply with the following requirements:
   a. Access the work area only through an approved decontamination system. Lock or block other entrances. Seal emergency exits (for use during a fire or accident) with polyethylene sheeting and tape.
   b. Seal the waste pass-out, except during the removal of asbestos waste from the enclosure.

c. Entrance To The Regulated Area: Employees shall enter the decontamination area through the clean room, remove and store clothing, and put on protective clothing and respiratory protection before passing through to the equipment room.
d. Exit From The Regulated Area: Employees shall exit the regulated area by removing gross contamination and debris from their protective clothing. The clothing shall be removed and disposed of in the equipment room into labeled impermeable bags or containers. Employees shall then shower and enter the clean room before changing into street clothes.

8. Local Exhaust Ventilation: Maintain portable air filtration units with a HEPA filter in use during asbestos abatement operations requiring enclosures. Units shall conform to OSHA Standard 1926.1101, Appendix F, and shall be designed in accordance with 40 CFR 61, Subpart M, Section 61.153.
   a. Exhaust directly to building exterior. Provide a backup portable air filtration unit at each removal enclosure. Startup ventilation units prior to initiating asbestos removal operations and run until the Owner's consultant has approved their shut-down after cleaning, sampling, visual inspection, and tear-down.
   b. Direct air movement within the enclosure away from the employees' work area and toward the air filtration device.
   c. Provide not less than 4 air changes per hour within the enclosure.
   d. Within the enclosure, through the period of its use, maintain a pressure differential of not less than minus 0.02 water gage with respect to ambient conditions outside the enclosure.
9. Visually inspect the enclosure for breeches and smoke-test for leaks before work begins, and before the start of each work shift. Make all modifications to the enclosure prior to starting removal work.

B. Asbestos Removal Operations: Comply with the following requirements for asbestos removal operations:

1. Immediately preceding asbestos removal, apply a fine mist of amended water (water and wetting agent) to the asbestos materials and the surrounding area. Keep surrounding areas wet by spraying periodically with amended water. Maintain a high humidity environment to assist in fiber settling.
2. Remove asbestos material using two-person teams, on staging platforms, if necessary.
3. Remove the wet asbestos material as intact sections or components. Carefully lower the material to the floor or place directly into container. Never drop or throw asbestos material on the floor.
4. At working heights between 15 and 50 feet above the floor, place removed asbestos materials in containers at the elevated levels and lower to floor, or place onto inclined chutes or scaffolding for subsequent collection and placement into containers. Clean all debris at the completion of each workday.

5. Once the asbestos material is at ground level, pack in labeled 6-mil polyethylene bags, wet and, if appropriate, hold in drums prior to starting the next section.
6. Use 2 sealed and labeled 6-mil thick bags for storage and transportation of asbestos waste. Standing water shall be in each bag
7. Wrap large components removed intact in two layers of 6-mil polyethylene sheeting, label, and secure with tape for transport to the landfill. Comply with all wetting requirements.
8. Treat wires, hangers, steel bands, nails, screws, metal lath, tin sheeting, and similar sharp objects removed with asbestos material as asbestos waste. Place in drums for disposal.
9. Label containerized asbestos waste in accordance with OSHA, EPA, and Department of Transportation regulations, as follows:
   a. Label each container with OSHA label that contains the following information:

DANGER
CONTAINS ASBESTOS FIBERS
MAY CAUSE CANCER
CAUSES DAMAGE TO LUNGS
DO NOT BREATHE DUST
AVOID CREATING DUST

   b. Label each container with Owner's and Asbestos Abatement Firm's names and addresses as required by NESHAP. Owner's address is EHS, 1239 Kipke Drive, Ann Arbor, MI 48109-1010.
   c. Label each container with Class 9 Label required by DOT and identify waste as "RQ, Asbestos NA 2212."
10. Prepare a complete and accurate NESHAP Waste Shipment Record (special manifest). Assure all information required by the U.S. Department of Transportation regulation is included. Under "special handling instructions" provide the required DOT identification information: RQ Asbestos 9,NA 2212, PG III.
    a. Do not remove waste from site until Owner's Representative has signed and verified the shipment record.
11. Remove containerized asbestos waste daily from site, or store on site in a locked or secured location until ready for final disposal. Obtain approval of Owner's Representative and EHS representative of the location of disposal containers. Outdoor waste containers shall be fully enclosed and locked. Mark vehicles used to transport waste during the loading and unloading of asbestos waste with a visible sign, as required by NESHAP.
12. Each container shall have excess water evident, or the asbestos waste shall be mixed in a slurry.

C. Post-Removal Operation Requirements: After completion of asbestos removal and clean-up operations, comply with the following requirements:

1. The Asbestos Abatement Firm representative, in presence of Owner's consultant, shall inspect the entire work area for asbestos. Include decontamination unit, all plastic sheeting, seals over doorways, windows, and all other openings.
   a. If any suspect asbestos is found, repeat final cleaning operation, until the visual inspection is satisfactory to the Owner's consultant and the asbestos removal firm. Asbestos not scheduled to be removed as part of the project is exempt.
2. Encapsulate all walls, floors, ceilings, other exposed surfaces, and decontamination facilities after completing the work area inspection.
   a. Remove the inner polyethylene barrier that is not integral to maintaining negative pressure in the enclosure at this time, and post-abatement air samples will be collected by Owner's consultant. Immediately clean any asbestos-containing materials observed behind these secondary barriers.
3. When post-abatement fiber levels are greater than either 0.01 fiber/cc or background level, repeat cleanup operation until the area is below either 0.01 fibers/cc or background level.
4. When the post-abatement samples are in compliance, and the Owner's consultant or EHS has completed the visual inspection, the enclosure shall be removed.
   a. Turn off HEPA filter exhaust units only after all barriers have been removed.
   b. A final visual inspection will be conducted by the Owner's consultant or EHS representative before the Contractor is released from the removal site. The final inspection will include tape, polyethylene sheet, debris, and equipment.

3.3 REMOVAL BY NEGATIVE PRESSURE GLOVE BAG SYSTEMS

A. Equipment and Materials: Use the following equipment and materials for each glovebag procedure:

1. Glovebags fabricated of 6-mil thick plastic without seams at the bottom.
2. HEPA vacuum system attached to the glovebag and run continuously during operation.
3. Protective suits and respirators.
4. Plastic sheeting.
5. Wetting agent.
6. Encapsulant.

B. Procedures: Comply with the following glovebag method requirements:

1. Wrap loose and friable material adjacent to the removal area in 2 layers of 6-mil thick plastic, or otherwise render intact.
2. Place plastic sheeting on the floor and equipment beneath each glovebag.
3. Wet-wipe or HEPA vacuum dust and dirt from insulation to be removed.

4. Install glovebags to completely cover the circumference of pipe or other structure where work is to be done.
5. Smoke-test glovebags for leaks. Seal leaks prior to use.
6. Insert and seal equipment that penetrates the bag (spray wands, vacuum nozzles) before insulation is disturbed.
7. Wet the insulation to be removed before, during, and after the removal.
8. Provide only bags capable of withstanding constant wetting and evacuation through a HEPA filtered device.
9. During the performance of glovebag operations removing thermal systems, insulation, or surfacing materials, employ not less than 2 persons, working simultaneously, for each task.
10. Wipe insulation residue from the pipe prior to application of an encapsulant.
11. Spray the pipe and glovebag with an encapsulant before the bag is removed from the pipe.
12. Seal exposed insulation ends with a heavy grade mastic.
13. Follow glovebag manufacturer's instructions.
14. Comply with requirements for asbestos waste disposal indicated in "Removal by Full Enclosure Method" of this Section.

C. Unacceptable Conditions and Procedures and Conditions: In general, do not use the glovebag method in conditions that prevent safe completion of the removal process. The following procedures are not allowed during glovebag removal:

1. Removing severely damaged insulation.
2. Overloading glovebag.
3. Sliding or moving insulation or glovebag along pipe.
4. Squeezing bags to remove air.
5. Placing glovebags on pipes or other surfaces that exceed 150 deg. F.
6. Using a glovebag more than once.

3.4 REMOVAL BY ENTIRE STRUCTURES METHOD

A. The removal of entire structures without disturbing the asbestos is encouraged. An example is removal of asbestos covered pipe fittings by cutting out the entire pipe section scheduled for demolition.

1. Obtain Owner's Representative's approval of removal by entire structures method prior to starting the project.

B. Required Procedures: Comply with the following requirements applicable to removal of entire structures:

1. Properly wet all asbestos materials before starting procedure. Ensure that material stays adequately wet throughout the entire procedure by continuing application of water as needed.
2. Properly and fully wrap and label the structure before it is moved or cut out.
3. Provide the equipment necessary for asbestos debris cleaning on site during the procedure.

4. Comply with requirements for asbestos waste disposal indicated in "Removal by Enclosure Full Method" Article of this Section.

3.5 FIELD QUALITY CONTROL

A. Pre-Notification of EHS Representative: To permit adequate time to schedule air monitoring, notify the EHS representative not less than 10 calendar days prior to planned start of all removal operations.

B. Air Monitoring: Except for roofing removal work Owner will retain a professional independent industrial hygiene consultant to collect air samples and oversee the project to insure that compliance with applicable codes, regulations, and ordinances, including 29 CFR 1926.1101, NESHAP, and P.A. 135. The consultant will collect background, contiguous, work area, personal, and post-abatement air samples. EHS will provide one copy of the report to the Contractor.

1. If contiguous sampling indicates airborne fiber concentrations above 0.01 fibers/cc or background level, work will be stopped unless otherwise approved by EHS. Work may resume when the source of contamination has been corrected and the contamination has been cleaned to the satisfaction of the EHS.
2. Glovebag, entire structures, and full enclosure clearance sampling will be by the aggressive PCM method when feasible. Enclosures must be fully dry before sampling.
3. Roofing removal Contractors may provide their own air monitoring in compliance with roofing removal requirements of this Section.

C. Inspection: If during the project, EHS representative or Owner's consultant determines that work practices either violate applicable rules and regulations or endanger employees, the Contractor's on-site representative shall stop operations immediately and take corrective action. Cooperate fully with EHS representative and Owner's consultant.

3.6 REMOVAL OF NON-FRIABLE ASBESTOS-CONTAINING MATERIALS

A. Removal of Non-Friable Materials, General: For each type of non-friable asbestos-containing material indicated, comply with the following requirements:

1. Comply with requirements of Article 3.1 of this Section.
2. Conduct non-friable material removal operations to prevent the material from becoming friable during the removal and disposal process. No visible emissions are permitted. If the material does not remain substantially intact, comply with the requirements for friable asbestos removal specified in Articles 3.2 of this Section (except roofing removal).
3. Place impermeable dropcloths on surfaces beneath removal activity.
4. Do not conduct asbestos removal unless the Owner's Consultant is present at the site and EHS has been notified. For roofing removal projects, notify EHS prior to start of work.

5. Labeling Containerized Waste: Comply with the requirements of Article 3.2, paragraphs B.9.a. through c. of this Section.

B. Removal of Resilient Flooring Materials:

1. Prior to removal, critical barriers shall be placed over openings to the regulated area. During removal, air in the regulated area shall be filtered through the use of air filtration device(s).
2. Removal of floor tile with an infrared heat machine eliminates the critical barrier and negative pressure requirements.
3. Prior to removal, clean floors of dirt and debris with vacuums equipped with HEPA filter, disposable dust bag, and metal floor tool (brush tools are not permitted). Control odors and fumes with engineering controls.
4. Sanding the floor or related backing is not permitted.
5. Mechanical chipping of vinyl floor tile is prohibited, except when performed in a negative pressure enclosure.
6. Thoroughly wet vinyl floor tile with amended water. Use a slip scraper or equivalent to loosen the floor tile from the floor. Remove the floor tile in an intact state. Keep the floor tile wet throughout the removal and cleanup.
   a. Removal of floor tile using an infrared heat machine eliminates the wetting requirement.
7. Remove vinyl sheet flooring by cutting while wetting the snip-point. Wet sheet flooring during delamination. Rip-up of resilient flooring material is not permitted.
8. Clean resilient flooring of all debris using a HEPA vacuum, wet sweeping, mopping or equivalent and allow time to dry. Dry sweeping is prohibited.
9. Place the resilient flooring material and debris in an asbestos disposal bag. Seal the bag and place it in a properly labeled drum or polyspun bag. Comply with the disposal and labeling requirements of this Section.

C. Asbestos Mastic Removal:

1. Clean the floor of all debris using a HEPA vacuum, wet sweeping, mopping or equivalent.
2. Remove as much mastic as possible using an EHS approved solvent. Control odors and fumes with engineering controls.
3. Perform scraping of residual adhesive and backing using wet methods.
4. After all debris is removed, thoroughly mop the floor and allow time to dry.
5. If shot blasting is used to remove mastic, comply with requirements for friable asbestos removal specified in Article 3.2 of this Section.
6. Properly dispose of all asbestos and solvent waste according to all applicable regulations, and comply with the disposal and labeling requirements of this Section.

D. Asbestos-Containing Siding, Transite Panels, and Laboratory Counter Tops: Remove non-friable asbestos-containing siding, shingles, transite panels, and laboratory counter tops using the following technique:

1. Cutting, abrading, or breaking material is not permitted.
2. Wet material with amended water prior to removal.

3. Carefully disassemble material such a manner as to prevent breakage.
4. Wrap and seal material in two layers 6-mil thick polyethylene, asbestos disposal bags, or equivalent. Seal bags or packages and properly label them with appropriate asbestos warning signs as indicated in "Removal of Non-Friable Materials, General" Article of this Section.
5. Immediately lower to the ground unwrapped or unbagged materials via covered, dust-tight chute, crane, or hoist; or place in an impervious waste bag or wrap in plastic sheet and lower to the ground no later than the end of the work shift.
6. Clean the floor of all debris using a HEPA vacuum, wet sweeping, mopping or equivalent and allow time to dry.
7. Dispose of asbestos waste in accordance requirements of this Section.

E. Non-Friable Asbestos-Containing Roofing Materials: Non-friable asbestos-containing roofing materials may be removed in a non-friable state. This specification does not apply to removal of intact cements, coatings, or mastics. Obtain EHS review and approval of planned removal operations prior to beginning. Remove non-friable asbestos-containing roofing materials in using the following technique:

1. Each employee who is likely to disturb or handle asbestos material shall have completed an 8-hour training class, and the project shall be supervised by a competent person who has completed the appropriate contractor/supervisor course.
2. Isolate roof level heating and ventilation air intake sources within the regulated area and others that will be affected; or arrange for shut-down the affected ventilation system during removal operations. Acceptable isolation techniques include the following:
   a. Use 20-foot or larger buffer zones.
   b. Installation of HEPA filters over the air intakes.
   c. Erection of horizontal or vertical extensions that relocate the opening of the intake outside or above the regulated area.
   d. Covering the intake with plastic sheeting or other appropriate barrier.
3. Personal protective equipment (PPE), including disposable coveralls and NIOSH approved appropriate high efficiency particulate absolute (HEPA) respirators, shall be worn by personnel if the asbestos containing material is not removed in an intact state.
4. Remove roofing material in an intact state.
5. Use wet methods to remove materials that are not intact, or that are rendered not intact during removal, except where wet methods will create a safety hazard or are otherwise not feasible.
6. Continuously apply a water mist to the blade of power cutting tools, unless a competent person determines that misting will substantially decrease worker safety.

7. When removing roofing felts, collect the dust generated by power roof cutters with a HEPA-filtered dust collector; or immediately vacuum using a HEPA-filtered vacuum along the cut line. For smooth surfaces only, gently sweep wet dust generated from cutting operations, and carefully and completely wipe up the still-wet dust and debris.
8. For removal and repair operations of intact roofing less than 25 sq. ft. in area, the use of wet methods or HEPA vacuuming is not required, provided manual methods do not render the material non-intact and no visible dust is created.
9. Do not drop or throw to the ground asbestos-containing roofing material that has been removed. As soon as practicable, but not later than the end of the work shift, lower debris to ground either by passing or carrying by hand, or by lowering to the ground in a covered, dust-tight chute, crane or hoist.
    a. While on the roof, keep non-intact asbestos-containing materials wet; or seal in impermeable waste bags, or wrap in plastic sheeting.
    b. While on the roof, intact asbestos-containing material is not required to be kept wet, bagged, or wrapped.
10. Upon being lowered to the ground, transfer unwrapped material to a closed receptacle in manner that precludes the dispersion of dust. Dispose of the material in an asbestos-accepting Type II landfill. Notify the landfill that the roofing material contains asbestos and provide waste shipment records to EHS within 35 days.
11. For removal of intact pipeline asphaltic wrap or roof flashings that contain asbestos, engage a competent person to examine the material and determine whether the material is intact and likely to remain intact during removal. Remove the material using manual methods. Sanding, grinding, or other abrading operations are not permitted. Do not throw or drop materials to the ground. Lower the material in a covered, dust-tight chute, crane, or hoist. Remove debris from the roof at the end of the work shift.

F. Non-Friable Asbestos Containing Exterior Sealant, Caulk, Putty and Window Glazing: Remove exterior non-friable asbestos-containing sealants, caulk, putty and window glazing using the following technique:

1. Any existing loose material shall be HEPA vacuumed prior to removal.
2. The material shall be thoroughly wetted prior to and during its removal.
3. The material should be removed as intact as possible. Manual methods such as scraping or raking shall be used, unless power tools are used that are equipped with HEPA ventilation. If power tools are used comply with Article 3.2 (Asbestos Removal by Full Enclosure Method) of this Section.
4. Asbestos containing materials removed, shall be immediately bagged or wrapped and kept wetted until transferred to a closed receptacle.

5. The removal of windows and other whole building components without disturbing the asbestos is encouraged. An example of this would be removing a window with asbestos containing glazing or caulk by cutting out the entire window scheduled for demolition. Comply with Article 3.4 (Removal by Entire Structures Method) of this Section when removing entire building components containing asbestos.
6. If the material becomes friable during the abatement process, comply with the requirements for friable asbestos removal specified in Article 3.2 (Asbestos Removal by Full Enclosure Method) of this Section.
7. Dispose of all asbestos containing materials, including those removed by the entire structures method, per the requirements of this Section.

3.7 SCHEDULE OF ITEMS CONTAINING ASBESTOS

A. Bidding Requirements: Comply with the following requirements related to bidding:

1. Survey quantities provided are approximate. Bidders are required to field investigate as necessary and assume all responsibility to verify the work required and quantities involved for complete asbestos abatement.
2. The building is open for field inspection by all bidders during the bidding period.
3. A "pre-bid orientation meeting" will be conducted to familiarize prospective bidders with site conditions and provide for verification of marked and scheduled quantities, as applicable.

B. The following items have been surveyed and determined to have asbestos as a component:

1. Roofing felts and base flashing.
2. Roofing underlayment.
3. Spray applied insulation.
4. Blown-in insulation.
5. Fire proofing materials.
6. Fire doors.
7. Drywall and drywall taping compounds.
8. Acoustic and decorative plaster.
9. Vinyl asbestos floor tile.
10. Composition sheet flooring.
11. Shaft wall construction.
12. Flooring adhesives.
13. Textured paints and coatings.
14. Laboratory countertops, sinks and shelves.
15. Cabinet liners and bottoms.
16. Laboratory fume hood interior.
17. Vinyl wall coverings.
18. Cement pipes.
19. Boiler insulation.
20. Piping insulation.
21. Duct insulation.
22. Flexible fabric ductwork connections.
23. Cement composition board ducts.
24. Electrical panel partitions.

25. Electrical wiring insulation and electrical cloth.
    a. Assignment of Responsibility: Removal of wire covered with non-friable, asbestos-containing, insulation shall be performed by the electrical (sub)contractor. Electrical (sub)contractor shall accumulate wire in containers furnished by the asbestos abatement contractor. The asbestos abatement (sub)contractor shall seal and dispose of containers as asbestos waste.
26. Underground electric ductbank insulation.

END OF SECTION 028213

UNIVERSITY OF MICHIGAN
ARCHITECTURE, ENGINEERING AND CONSTRUCTION

ARCHITECTURE & ENGINEERING
326 East Hoover, Mail Stop B
Ann Arbor, MI 48109-1002
Phone: 734-764-3414
Fax: 734-936-3334

BuildingName
The Description of the Project
P00000000 0000

SPECIFICATION DIVISION 2

NUMBER SECTION DESCRIPTION

DIVISION 02 EXISTING CONDITIONS
SECTION 028214 – ASBESTOS REMEDIATION – FLOOR TILE AND MASTIC

END OF CONTENTS TABLE

DIVISION 02 EXISTING CONDITIONS
SECTION 028214 – ASBESTOS REMEDIATION – FLOOR TILE AND MASTIC

PART 1 - GENERAL

1.1 SUMMARY

A. This Section includes removal and disposal of asbestos-containing materials by full enclosure, glove bag, or entire structures methods as applicable. Demolition and debris removal of all asbestos-containing materials identified by provisions of this Section, or shown on drawings, or identified at the site, shall be executed under the provisions of this Section, and other applicable sections of these specifications.

B. Extent of asbestos removal work is as follows:

1. Indicated on drawings.
2. Surveyed and listed in "Schedule of Items Containing Asbestos" Article in Part 3 of this Section.
3. Surveyed and listed in "Schedule of Items Containing Asbestos" Article in Part 3 of this Section, as specified in related sections, and as indicated on the drawings. Proceed with Work of this Section simultaneously, and in coordination with, remaining Work of the Project.
4. Marked at the site during the pre-bid inspection "walk through".
5. Limited to that required to connect new plumbing work to existing piping.

1.2 RELATED SECTIONS

A. Unit price items are scheduled with related units of measure in Division 01 Section "Unit Prices."

B. Work of this Section that is affected by alternates is described in Division 01 Section "Alternates."

C. Demolition and removal of items not containing asbestos as a component is included in Division 02 Section "Selective Demolition."

D. Pipe re-insulation is included in Division 23 Section "Mechanical Insulation."

1.3 DEFINITIONS

A. Asbestos Abatement Firm: Firm engaged to perform actual removal and disposal work, either as Contractor or subcontractor.

B. Asbestos Containing Material: The term "asbestos containing material" is abbreviated ACM.

C. Owner's Consultant: Firm engaged by Owner to identify and measure asbestos containing materials, or to inspect demolition operations, including monitoring of air quality.

D. EHS: Owner's Environment, Health and Safety Department, 1239 Kipke Drive, Ann Arbor, MI 48109-1010; phone (734) 647-1143.

1.4 SUBMITTALS

A. Initial Submittals: Submit the following documents to Owner's Representative at the pre-abatement meeting:

1. Schedule of removal, specifying work locations, length and number of shifts, foreman's name, and crew size.
2. Disposal Site Certification: Letter, signed by the Contractor, certifying that an approved asbestos-accepting type II landfill will be used for disposal. Include the facility name, address, and phone number.

B. Waste Disposition Submittals: Submit to EHS signed waste shipment record stating that asbestos waste has been properly disposed. Submit the following:

1. Receipts (trip tickets) from approved landfill.
2. Asbestos Waste Shipment Record: As follows:
   a. Prior to removing asbestos-containing material from the project site, provide Owner's Representative or Owner's consultant with a completed waste shipment record fully complying with Section 61.150 of the NESHAP standard, and 49 CFR Part 172.200 of the U.S. Department of Transportation, and including all required information.
   b. Ensure that the landfill operator provides a signed copy of the waste shipment record to EHS within 35 days of the date that asbestos-containing material is removed from the project site. If waste is not transported directly from the project site to the landfill, the waste shipment record shall reflect each transfer.
   c. The Owner will not make final payment prior to receipt of signed waste shipment record.

C. Contract Closeout Submittals: Comply with the following additional requirements of Division 01 Section "Closeout Procedures":

1. Asbestos Quantity Removal Report: Submit 3 copies of asbestos quantity removal report to Owner's Representative at least 4 weeks prior to Contractor's application for final payment. Include information in the following format:
   a. Quantities of Asbestos Removed:
      1) _____ square feet of asbestos-containing floor covering and or mastic.
2. Statement of Visual Inspection: Prior to application for final payment, submit to EHS a statement of visual inspection signed by the Contractor's competent person/supervisor. Include the following:
   a. Name of contractor conducting work.
   b. Name, signature, and title of on-site supervisor.
   c. Name, location, and start and finish date of abatement work.
   d. Current date.
   e. Statement that the work was completed according to applicable federal, state, and local laws, and these specifications.

f. Statement that the Asbestos Abatement Firm's field supervisor has visually inspected the work site and has found no dust, debris, or other suspect asbestos-containing materials that were part of the scope of work.

1.5 QUALITY ASSURANCE

A. Pre-Qualified Asbestos Abatement Firms: Engage one of the following pre-qualified firms to perform abatement of asbestos containing materials. Contact EHS for approval if a contractor is not on the list (i.e. flooring contractors trained specifically to remove floor tile).

1. 21st Century Salvage, Inc.
2. Adamo Demolition Company
3. Advanced Industrial Services, LLC
4. Asbestos Abatement, Inc.
5. Bierlein Companies, Inc.
6. Building Decommission Services, LLC.
7. Certified Abatement Services, Inc.
8. Detroit Dismantling Corporation
9. Environmental Assurance Company, Inc.
10. Environmental Maintenance Engineers
11. Environmental Specialty Services, Inc.
12. Global Green Service Group
13. Great Lakes Environmental Service, Inc.
14. Homrich
15. Michigan Mechanical Abatement, Inc.
16. MIS Corporation-Michigan
17. National Environmental Group, LLC
18. Next Generation Environmental, Inc.
19. North American Dismantling Corp.
20. Omega Demolition Corporation
21. Pro-Tech Environmental & Construction, Inc.
22. Professional Thermal Systems, Inc.
23. Qualified Abatement Services, Inc.
24. Quality Environmental Services, Inc.
25. Trust Thermal Abatement, Inc.

B. Pre-Abatement Meeting: Approximately 2 weeks prior to scheduled start of the abatement project, the Owner's Representative will hold a pre-abatement meeting with the individuals indicated below:

1. Contractor's representative.
2. Asbestos Abatement Firm's representative.
3. EHS representative.
4. Owner's consultant.
5. Owner's Representative.
6. Owner's building maintenance personnel.

C. The meeting agenda will include:

1. Review of the scope of work.
2. Removal methods to be used.
3. Review of Contractor's initial submittals.
4. A walk-through survey of the site, if appropriate.

D. For small projects, the meeting may be suspended at the discretion of the Owner's Representative. If the meeting is suspended, deliver required initial submittals to the Owner's Representative's office 2 weeks prior to the start of work.

PART 2 - PRODUCTS (NOT APPLICABLE)

PART 3 - EXECUTION

3.1 ASBESTOS ABATEMENT, GENERAL

A. Conduct asbestos abatement operations in a manner that fully protects Contractor's and subcontractor's employees, the general public, and building occupants from exposure to asbestos and other safety and health hazards.

1. Asbestos abatement projects shall be directly supervised by a competent person as described in 29 CFR 1926.1101.
2. The supervisor/competent person must complete responsibility checklists throughout all phases of the project.

B. Protect adjacent areas, materials and surfaces from damage due to demolition operations, including but not necessarily limited to the following:

1. Water damage.
2. Dirt, dust and debris.
3. Abrasion.
4. Cuts and scratches.
5. Holes from fasteners for temporary barriers.

C. All asbestos work shall be conducted within a regulated area that complies with the following requirements:

1. Post a sufficient number of signs required by 29 CFR 1926.1101 at the asbestos abatement area and at every work area entrance, so that tenants, Owner's personnel, and other contractor's employees have an opportunity to take protective measures before exposing themselves to asbestos. Place banners if necessary to secure open areas. Include information on signs indicating location and quantity of asbestos-containing material.
2. Allow only authorized, properly protected personnel to enter the regulated area. Immediately report unauthorized individuals entering the work area to EHS or the Owner's consultant.

D. When required, provide employees and inspectors authorized to enter the regulated area with protective work clothing consisting of disposable Dupont "Tyvek" (or equivalent) full body coveralls, head covers, boots, and other necessary safety gear, including a hard hat and eye protection.

E. Provide respiratory protection to employees as required by current OSHA regulations including 29CFR 1910.134 and 1926.1101.

1. Provide asbestos abatement workers with powered air purifying respirators (PAPR) with full facepiece and HEPA filters for adequate protection during asbestos material removal operations. Respiratory protection may be down-graded if negative exposure assessment indicates that less protection is required.
2. A half-face respirator or PAPR must be worn while tearing down and setting up enclosures, and during pre-cleaning and post-cleaning work.
3. Do not allow respirators to be pulled away from faces while in the work area.
4. Maintain an extra PAPR unit on site at all times for the duration of the abatement project.
5. Provide full facepiece supplied-air respirators operated in pressure demand mode equipped with air auxiliary and pressure self-contained breathing apparatus or HEPA egress filters if required for measured fiber concentrations.

F. Maintain at each job site and post the following documents:

1. Employee respiratory protection program.
2. Michigan Right-To-Know poster.
3. Material Safety Data Sheet locator.
4. Company standard operating procedure.
5. This specification Section.
6. Material Safety Data Sheets for products used on job.
7. CFR 1926.1101.
8. CFR, Part 61 (NESHAP).
9. Training Certificates and Medical Approval for each worker.

G. Use the following engineering controls and work practices for all asbestos abatement operations, regardless of measured exposure levels:

1. Vacuum cleaners equipped with HEPA filters to collect all asbestos-containing dust and debris.
2. Wet methods to control exposures during asbestos removal and clean-up, except where proven to be infeasible.
3. Prompt clean-up and disposal of asbestos-contaminated wastes and debris in leak-proof containers.

H. Do not use any of the following equipment or work practices during asbestos abatement operations, regardless of measured exposure levels:

1. High-speed abrasive disc saws not equipped with point-of-cut HEPA ventilation or HEPA filtered exhaust air enclosures.
2. Blowing with compressed air to remove asbestos-containing materials.
3. Dry sweeping, shoveling, or other dry methods to clean up asbestos-containing dust and debris.
4. Employee rotation as a means of reducing employee exposure to asbestos.

3.2 REMOVAL OF NON-FRIABLE ASBESTOS-CONTAINING MATERIALS

A. Removal of Non-Friable Materials, General: For each type of non-friable asbestos-containing material indicated, comply with the following requirements:

1. Comply with requirements of Article 3.1 of this Section.
2. Conduct non-friable material removal operations to prevent the material from becoming friable during the removal and disposal process. No visible emissions are permitted. If the floor tile does not remain substantially intact, cease operations and contact EHS.
3. Do not conduct asbestos removal unless the Owner's Consultant is present at the site and EHS has been notified.
4. Labeling Containerized Waste: Label containerized asbestos waste in accordance with OSHA, EPA, and Department of Transportation regulations, as follows:
   a. Label each container with OSHA label that contains the following information:

DANGER
CONTAINS ASBESTOS FIBERS
MAY CAUSE CANCER
CAUSES DAMAGE TO LUNGS
DO NOT BREATHE DUST
AVOID CREATING DUST

   b. Label each container with Owner's and Asbestos Abatement Firm's names and addresses as required by NESHAP. Owner's address is EHS, 1239 Kipke Drive, Ann Arbor, MI 48109-1010.
   c. Label each container with Class 9 Label required by DOT and identify waste as "RQ, Asbestos NA 2212."
5. Prepare a complete and accurate NESHAP Waste Shipment Record (special manifest). Assure all information required by the U.S. Department of Transportation regulation is included. Under "special handling instructions" provide the required DOT identification information: RQ Asbestos 9,NA 2212, PG III.
   a. Do not remove waste from site until Owner's Representative has signed and verified the shipment record.
6. Remove containerized asbestos waste daily from site, or store on site in a locked or secured location until ready for final disposal. Obtain approval of Owner's Representative and EHS representative of the location of disposal containers. Outdoor waste containers shall be fully enclosed and locked. Mark vehicles used to transport waste during the loading and unloading of asbestos waste with a visible sign, as required by NESHAP.
7. Each container shall have excess water evident, or the asbestos waste shall be mixed in a slurry.

B. Removal of Resilient Flooring Materials:

1. Prior to removal, critical barriers shall be placed over openings to the regulated area. During removal, air in the regulated area shall be filtered through the use of air filtration device(s).
2. Removal of floor tile with an infrared heat machine eliminates the critical barrier and negative pressure requirements.

3. Prior to removal, clean floors of dirt and debris with vacuums equipped with HEPA filter, disposable dust bag, and metal floor tool (brush tools are not permitted). Control odors and fumes with engineering controls.
4. Sanding the floor or related backing is not permitted.
5. Mechanical chipping of vinyl floor tile is prohibited, except when performed in a negative pressure enclosure.
6. Thoroughly wet vinyl floor tile with amended water. Use a slip scraper or equivalent to loosen the floor tile from the floor. Remove the floor tile in an intact state. Keep the floor tile wet throughout the removal and cleanup.
   a. Removal of floor tile using an infrared heat machine eliminates the wetting requirement.
7. Remove vinyl sheet flooring by cutting while wetting the snip-point. Wet sheet flooring during delamination. Rip-up of resilient flooring material is not permitted.
8. Clean resilient flooring of all debris using a HEPA vacuum, wet sweeping, mopping or equivalent and allow time to dry. Dry sweeping is prohibited.
9. Place the resilient flooring material and debris in an asbestos disposal bag. Seal the bag and place it in a properly labeled drum or polyspun bag. Comply with the disposal and labeling requirements of this Section.

C. Asbestos Mastic Removal:

1. Clean the floor of all debris using a HEPA vacuum, wet sweeping, mopping or equivalent.
2. Remove as much mastic as possible using an EHS approved solvent. Control odors and fumes with engineering controls.
3. Perform scraping of residual adhesive and backing using wet methods.
4. After all debris is removed, thoroughly mop the floor and allow time to dry.
5. Shot blasting is prohibited, except when performed in a negative pressure enclosure.
6. Properly dispose of all asbestos and solvent waste according to all applicable regulations, and comply with the disposal and labeling requirements of this Section.

3.3 FIELD QUALITY CONTROL

A. Pre-Notification of EHS Representative: To permit adequate time to schedule air monitoring, notify the EHS representative not less than 10 calendar days prior to planned start of all removal operations.

B. Air Monitoring: Owner will retain a professional independent industrial hygiene consultant to collect air samples and oversee the project to insure that compliance with applicable codes, regulations, and ordinances, including 29 CFR 1926.1101, NESHAP, and P.A. 135. The consultant will collect background, contiguous, work area, personal, and post-abatement air samples. EHS will provide one copy of the report to the Contractor.

1. If contiguous sampling indicates airborne fiber concentrations above 0.01 fibers/cc or background level, work will be stopped unless otherwise approved by EHS. Work may resume when the source of contamination has been corrected and the contamination has been cleaned to the satisfaction of the EHS.

C. Inspection: If during the project, EHS representative or Owner's consultant determines that work practices either violate applicable rules and regulations or endanger employees, the Contractor's on-site representative shall stop operations immediately and take corrective action. Cooperate fully with EHS representative and Owner's consultant.

3.4 SCHEDULE OF ITEMS CONTAINING ASBESTOS

A. Bidding Requirements: Comply with the following requirements related to bidding:

1. Survey quantities provided are approximate. Bidders are required to field investigate as necessary and assume all responsibility to verify the work required and quantities involved for complete asbestos abatement.
2. The building is open for field inspection by all bidders during the bidding period.
3. A "pre-bid orientation meeting" will be conducted to familiarize prospective bidders with site conditions and provide for verification of marked and scheduled quantities, as applicable.

B. The following items have been surveyed and determined to have asbestos as a component:

1. Vinyl asbestos floor tile.
2. Composition sheet flooring.
3. Flooring adhesives.

END OF SECTION 028214

UNIVERSITY OF MICHIGAN
ARCHITECTURE, ENGINEERING AND CONSTRUCTION

ARCHITECTURE & ENGINEERING
326 East Hoover, Mail Stop B
Ann Arbor, MI 48109-1002
Phone: 734-764-3414
Fax: 734-936-3334

BuildingName
The Description of the Project
P00000000 0000

SPECIFICATION DIVISION 2

NUMBER SECTION DESCRIPTION

DIVISION 02 EXISTING CONDITIONS
SECTION 028215 – ASBESTOS REMEDIATION – ROOFING MATERIAL

END OF CONTENTS TABLE

DIVISION 02 EXISTING CONDITIONS
SECTION 028215 – ASBESTOS REMEDIATION – ROOFING MATERIAL

PART 1 - GENERAL

1.1 SUMMARY

A. This Section includes removal and disposal of asbestos-containing materials by full enclosure, glove bag, or entire structures methods as applicable. Demolition and debris removal of all asbestos-containing materials identified by provisions of this Section, or shown on drawings, or identified at the site, shall be executed under the provisions of this Section, and other applicable sections of these specifications.

B. Extent of asbestos removal work is as follows:

1. Indicated on drawings.
2. Surveyed and listed in "Schedule of Items Containing Asbestos" Article in Part 3 of this Section.

1.2 RELATED SECTIONS

A. Unit price items are scheduled with related units of measure in Division 01 Section "Unit Prices."

B. Work of this Section that is affected by alternates is described in Division 01 Section "Alternates."

C. Demolition and removal of items not containing asbestos as a component is included in Division 02 Section "Selective Demolition."

D. Pipe re-insulation is included in Division 23 Section "Mechanical Insulation."

1.3 DEFINITIONS

A. Asbestos Abatement Firm: Firm engaged to perform actual removal and disposal work, either as Contractor or subcontractor.

B. Asbestos Containing Material: The term "asbestos containing material" is abbreviated ACM.

C. Owner's Consultant: Firm engaged by Owner to identify and measure asbestos containing materials, or to inspect demolition operations, including monitoring of air quality.

D. EHS: Owner's Environment, Health and Safety Department, 1239 Kipke Drive, Ann Arbor, MI 48109-1010; phone (734) 647-1143.

1.4 SUBMITTALS

A. Initial Submittals: Submit the following documents to Owner's Representative at the pre-abatement meeting:

1. License from the State of Michigan in accordance with Act 135 P.A. 1986 (Asbestos Abatement Contractors Licensing Act) (when applicable).

2. Copy of notification sent to appropriate federal, state, and local agencies (when applicable).
3. Copy of 8-hour training class certificates for each employee who is likely to disturb or handle asbestos material. Contractor/supervisor course certificates are also required for the competent person.
4. Schedule of removal, specifying work locations, length and number of shifts, foreman's name, and crew size.
5. Disposal Site Certification: Letter, signed by the Contractor, certifying that an approved asbestos-accepting type II landfill will be used for disposal. Include the facility name, address, and phone number.

B. Waste Disposition Submittals: Submit to EHS signed waste shipment record stating that asbestos waste has been properly disposed. Submit the following:

1. Receipts (trip tickets) from approved landfill.
2. Asbestos Waste Shipment Record: As follows:
   a. Prior to removing asbestos-containing material from the project site, provide Owner's Representative or Owner's consultant with a completed waste shipment record fully complying with Section 61.150 of the NESHAP standard, and 49 CFR Part 172.200 of the U.S. Department of Transportation, and including all required information.
   b. Ensure that the landfill operator provides a signed copy of the waste shipment record to EHS within 35 days of the date that asbestos-containing material is removed from the project site. If waste is not transported directly from the project site to the landfill, the waste shipment record shall reflect each transfer.
   c. The Owner will not make final payment prior to receipt of signed waste shipment record.

C. Contract Closeout Submittals: Comply with the following additional requirements of Division 01 Section "Project Closeout":

1. Asbestos Quantity Removal Report: Submit 3 copies of asbestos quantity removal report to Owner's Representative at least 4 weeks prior to Contractor's application for final payment. Include information in the following format:
   a. Quantities of Asbestos Removed:
      1) _____ square feet of asbestos-containing roofing material removed from project area.
2. Statement of Visual Inspection: Prior to application for final payment, submit to EHS a statement of visual inspection signed by the Contractor's competent person/supervisor. Include the following:
   a. Name of licensed contractor conducting work.
   b. Name, signature, and title of on-site supervisor.
   c. Name, location, and start and finish date of abatement work.
   d. Current date.
   e. Statement that the work was completed according to applicable federal, state, and local laws, and these specifications.

f. Statement that the Asbestos Abatement Firm's field supervisor has visually inspected the work site and has found no dust, debris, or other suspect asbestos-containing materials that were part of the scope of work.

1.5 QUALITY ASSURANCE

A. Pre-Qualified Asbestos Abatement Firms: Engage one of the following pre-qualified firms to perform abatement of asbestos containing materials (when applicable):

1. 21st Century Salvage, Inc.
2. Adamo Demolition Company
3. Advanced Industrial Services, LLC
4. Asbestos Abatement, Inc.
5. Bierlein Companies, Inc.
6. Building Decommission Services, LLC.
7. Certified Abatement Services, Inc.
8. Detroit Dismantling Corporation
9. Environmental Assurance Company, Inc.
10. Environmental Maintenance Engineers
11. Environmental Specialty Services, Inc.
12. Global Green Service Group
13. Great Lakes Environmental Service, Inc.
14. Homrich
15. Michigan Mechanical Abatement, Inc.
16. MIS Corporation-Michigan
17. National Environmental Group, LLC
18. Next Generation Environmental, Inc.
19. North American Dismantling Corp.
20. Omega Demolition Corporation
21. Pro-Tech Environmental & Construction, Inc.
22. Professional Thermal Systems, Inc.
23. Qualified Abatement Services, Inc.
24. Quality Environmental Services, Inc.
25. Trust Thermal Abatement, Inc.

B. Regulatory Requirements: Make all necessary notifications to the appropriate federal, state, and local agencies.

1. The National Emission Standards for Hazardous Air Pollutants (NESHAP), Asbestos regulation 40 CFR 61, Sub-Part M requires that if at least 80 lin. meters (260 lin. ft.) of friable asbestos materials, at least 15 sq. meters (160 square feet), or 1 cu. meter (35 cu. ft.) of friable asbestos materials, or other facility components are stripped or removed while renovating a facility, all the requirements of section 61.147 apply.
2. When applicable, notify the Michigan Department of Environmental Quality (MDEQ), the Michigan Department of Licensing and Regulatory Affairs (MDLARA), and appropriate state and local regulatory agencies. No work shall be conducted without notification of authorities having jurisdiction.

C. Pre-Abatement Meeting: Approximately 2 weeks prior to scheduled start of the abatement project, the Owner's Representative will hold a pre-abatement meeting with the individuals indicated below:

1. Contractor' representative.
2. Asbestos Abatement Firm's representative.
3. EHS representative.
4. Owner's consultant.
5. Owner's Representative.
6. Owner's building maintenance personnel.

D. The meeting agenda will include:

1. Review of the scope of work.
2. Removal methods to be used.
3. Review of Contractor's initial submittals.
4. A walk-through survey of the site, if appropriate.

E. For small projects, the meeting may be suspended at the discretion of the Owner's Representative. If the meeting is suspended, deliver required initial submittals to the Owner's Representative's office 2 weeks prior to the start of work.

PART 2 - PRODUCTS (NOT APPLICABLE)

PART 3 - EXECUTION

3.1 ASBESTOS ABATEMENT, GENERAL

A. Conduct asbestos abatement operations in a manner that fully protects Contractor's and subcontractor's employees, the general public, and building occupants from exposure to asbestos and other safety and health hazards.

1. Asbestos abatement projects shall be directly supervised by a competent person as described in 29 CFR 1926.1101.
2. The supervisor/competent person must complete responsibility checklists throughout all phases of the project.

B. Protect adjacent areas, materials and surfaces from damage due to demolition operations, including but not necessarily limited to the following:

1. Water damage.
2. Dirt, dust and debris.
3. Abrasion.
4. Cuts and scratches.
5. Holes from fasteners for temporary barriers.

C. All asbestos work shall be conducted within a regulated area that complies with the following requirements:

1. Post a sufficient number of signs required by 29 CFR 1926.1101 at the asbestos abatement area and at every work area entrance, so that tenants, Owner's personnel, and other contractor's employees have an opportunity to take protective measures before exposing themselves to asbestos. Place banners if necessary to secure open areas. Include information on signs indicating location and quantity of asbestos-containing material.
2. Allow only authorized, properly protected personnel to enter the regulated area. Immediately report unauthorized individuals entering the work area to EHS or the Owner's consultant.

D. When required, provide employees and inspectors authorized to enter the regulated area with protective work clothing consisting of disposable Dupont "Tyvek" (or equivalent) full body coveralls, head covers, boots, and other necessary safety gear, including a hard hat and eye protection.

E. Provide respiratory protection to employees as required by current OSHA regulations including 29CFR 1910.134 and 1926.1101.

1. Provide asbestos abatement workers with powered air purifying respirators (PAPR) with full facepiece and HEPA filters for adequate protection during asbestos material removal operations. Respiratory protection may be down-graded if negative exposure assessment indicates that less protection is required.
2. A half-face respirator or PAPR must be worn while tearing down and setting up enclosures, while glovebagging, and during pre-cleaning and post-cleaning work.
3. Do not allow respirators to be pulled away from faces while in the work area.
4. Maintain an extra PAPR unit on site at all times for the duration of the abatement project.
5. Provide full facepiece supplied-air respirators operated in pressure demand mode equipped with air auxiliary and pressure self-contained breathing apparatus or HEPA egress filters if required for measured fiber concentrations.

F. Maintain at each job site and post the following documents:

1. Copy of MDEQ/MDLARA notification (when applicable).
2. Employee respiratory protection program (when applicable).
3. Michigan Right-To-Know poster.
4. Material Safety Data Sheet locator.
5. Company standard operating procedure.
6. This specification Section.
7. Material Safety Data Sheets for products used on job.
8. CFR 1926.1101.
9. CFR, Part 61 (NESHAP).
10. The foreman's or supervisor's Contractor/Supervisor Accreditation Certificate.
11. State of Michigan Accreditation Certificates and Medical Approval for each worker (when applicable).

G. Use the following engineering controls and work practices for all asbestos abatement operations, regardless of measured exposure levels:

1. Vacuum cleaners equipped with HEPA filters to collect all asbestos-containing dust and debris.
2. Wet methods to control exposures during asbestos removal and clean-up, except where proven to be infeasible.
3. Prompt clean-up and disposal of asbestos-contaminated wastes and debris in leak-proof containers.
4. Establish a decontamination area, adjacent and connected to the regulated area, if the Project requires the removal of more than 25 lin. ft., or 10 sq. ft. of thermal systems insulation or surfacing ACM.
5. Establish an equipment area adjacent to the regulated area if the Project requires the removal of less than 25 lin. ft. or 10 sq. ft. of thermal systems insulation or surfacing ACM.

H. Do not use any of the following equipment or work practices during asbestos abatement operations, regardless of measured exposure levels:

1. High-speed abrasive disc saws not equipped with point-of-cut HEPA ventilation or HEPA filtered exhaust air enclosures.
2. Blowing with compressed air to remove asbestos-containing materials.
3. Dry sweeping, shoveling, or other dry methods to clean up asbestos-containing dust and debris.
4. Employee rotation as a means of reducing employee exposure to asbestos.

3.2 ASBESTOS REMOVAL BY FULL ENCLOSURE METHOD

A. Preparation of the Work Area: Complete the following preparation work prior to beginning asbestos removal operations:

1. Install critical barriers over each opening into the regulated area. The following requirements are in addition to, not in lieu of, other indicated surface and object protection requirements:
   a. Seal each opening between the work area and adjacent areas with not less than 2 layers of 4-mil polyethylene sheeting. Use an expanding-polyurethane foam gun to seal areas with large numbers of pipes, conduits and beams. Openings include, but are not necessarily limited to, windows, skylights, doorways, elevator hoistway openings, corridor entrances, drains, ducts, grills, grates, and diffusers.
   b. Seal intake and exhaust vents and duct seams within the regulated area with not less than 2 layers of 6-mil polyethylene sheeting.
2. HVAC System Shutdown: Owner's maintenance personnel will shut down heating, cooling, and air conditioning systems when necessary. Coordinate scheduling with Owner's personnel and provide 72 hours notice to the Owner's Representative prior to planned shut-down.
3. Protection of Surfaces and Objects: The following requirements are in addition to, not in lieu of, indicated work area sealing requirements. Cover the following surfaces and objects as follows:

a. Protect all surfaces beneath all removal activity. Remove moveable objects from the work area, and cover fixed objects with impermeable dropcloths or plastic sheeting with edges securely sealed with tape.
b. Cover open tanks with plywood or other solid material.
c. Provide clean, fresh air to mechanical equipment, where required to maintain proper performance of equipment.
d. Fully pre-clean all covered surfaces with amended water and a HEPA vacuum.
e. Cover walls with not less than 2 layers of 4-mil polyethylene sheeting. Construct free-standing enclosure walls of not less than 6-mil polyethylene sheeting, with supports spaced not more than 3 feet o.c.
f. Cover floors with not less than 2 layers of 6-mil polyethylene sheeting. Avoid seams where possible. If seams are necessary, overlap not less than 12 inches and tape joints. Extend sheeting 12 inches up the side walls leaving no seams at the wall and floor joint. Immediately repair punctures and leaks, and clean up seepage.

4. Cleaning: Do not use cleaning methods that raise dust, such as sweeping or using vacuum cleaners not equipped with HEPA filters. Do not disturb asbestos materials during pre-cleaning phases.
   a. Treat water removed from the enclosure as asbestos contaminated waste. Fully seal floor drains.
5. Deactivate or install ground-fault circuit interrupters on each electrical circuit within the enclosure.
6. Construct a three-chambered decontamination facility that is adjacent to and connected to the regulated area, and that consists of a dirty room, a shower room, and a clean room in series. Construct decontamination facilities that are exposed to weather of lumber and exterior grade plywood. Secure the facility when not in use.
   1) Supply the equipment room with properly labeled, impermeable bags and containers for the containment and disposal of contaminated protective equipment.
   2) Construct showers that comply with the requirements of 29 CFR 1910.141 (d) (3), with the shower room adjacent to both the equipment room and the clean room. Filter water waste and shower water through a 5 micron filter, or remove water from site as asbestos waste.
   3) Equip the clean room with a locker or appropriate storage container for each employee.
7. Employee Decontamination Facilities: Comply with the following requirements:
   a. Access the work area only through an approved decontamination system. Lock or block other entrances. Seal emergency exits (for use during a fire or accident) with polyethylene sheeting and tape.
   b. Seal the waste pass-out, except during the removal of asbestos waste from the enclosure.

c. Entrance To The Regulated Area: Employees shall enter the decontamination area through the clean room, remove and store clothing, and put on protective clothing and respiratory protection before passing through to the equipment room.
d. Exit From The Regulated Area: Employees shall exit the regulated area by removing gross contamination and debris from their protective clothing. The clothing shall be removed and disposed of in the equipment room into labeled impermeable bags or containers. Employees shall then shower and enter the clean room before changing into street clothes.

8. Local Exhaust Ventilation: Maintain portable air filtration units with a HEPA filter in use during asbestos abatement operations requiring enclosures. Units shall conform to OSHA Standard 1926.1101, Appendix F, and shall be designed in accordance with 40 CFR 61, Subpart M, Section 61.153.
   a. Exhaust directly to building exterior. Provide a backup portable air filtration unit at each removal enclosure. Start up ventilation units prior to initiating asbestos removal operations and run until the Owner's consultant has approved their shut-down after cleaning, sampling, visual inspection, and tear-down.
   b. Direct air movement within the enclosure away from the employees' work area and toward the air filtration device.
   c. Provide not less than 4 air changes per hour within the enclosure.
   d. Within the enclosure, through the period of its use, maintain a pressure differential of not less than minus 0.02 water gage with respect to ambient conditions outside the enclosure.
9. Visually inspect the enclosure for breeches and smoke-test for leaks before work begins, and before the start of each work shift. Make all modifications to the enclosure prior to starting removal work.

B. Asbestos Removal Operations: Comply with the following requirements for asbestos removal operations:

1. Immediately preceding asbestos removal, apply a fine mist of amended water (water and wetting agent) to the asbestos materials and the surrounding area. Keep surrounding areas wet by spraying periodically with amended water. Maintain a high humidity environment to assist in fiber settling.
2. Remove asbestos material using two-person teams, on staging platforms, if necessary.
3. Remove the wet asbestos material as intact sections or components. Carefully lower the material to the floor or place directly into container. Never drop or throw asbestos material on the floor.
4. At working heights between 15 and 50 feet above the floor, place removed asbestos materials in containers at the elevated levels and lower to floor, or place onto inclined chutes or scaffolding for subsequent collection and placement into containers. Clean all debris at the completion of each workday.

5. Once the asbestos material is at ground level, pack in labeled 6-mil polyethylene bags, wet and, if appropriate, hold in drums prior to starting the next section.
6. Use 2 sealed and labeled 6-mil thick bags for storage and transportation of asbestos waste. Standing water shall be in each bag
7. Wrap large components removed intact in two layers of 6-mil polyethylene sheeting, label, and secure with tape for transport to the landfill. Comply with all wetting requirements.
8. Treat wires, hangers, steel bands, nails, screws, metal lath, tin sheeting, and similar sharp objects removed with asbestos material as asbestos waste. Place in drums for disposal.
9. Label containerized asbestos waste in accordance with OSHA, EPA, and Department of Transportation regulations, as follows:
   a. Label each container with OSHA label that contains the following information:

DANGER
CONTAINS ASBESTOS FIBERS
MAY CAUSE CANCER
CAUSES DAMAGE TO LUNGS
DO NOT BREATHE DUST
AVOID CREATING DUST

   b. Label each container with Owner's and Asbestos Abatement Firm's names and addresses as required by NESHAP. Owner's address is EHS, 1239 Kipke Drive, Ann Arbor, MI 48109-1010.
   c. Label each container with Class 9 Label required by DOT and identify waste as "RQ, Asbestos NA 2212."
10. Prepare a complete and accurate NESHAP Waste Shipment Record (special manifest). Assure all information required by the U.S. Department of Transportation regulation is included. Under "special handling instructions" provide the required DOT identification information: RQ Asbestos 9,NA 2212, PG III.
    a. Do not remove waste from site until Owner's Representative has signed and verified the shipment record.
11. Remove containerized asbestos waste daily from site, or store on site in a locked or secured location until ready for final disposal. Obtain approval of Owner's Representative and EHS representative of the location of disposal containers. Outdoor waste containers shall be fully enclosed and locked. Mark vehicles used to transport waste during the loading and unloading of asbestos waste with a visible sign, as required by NESHAP.
12. Each container shall have excess water evident, or the asbestos waste shall be mixed in a slurry.

C. Post-Removal Operation Requirements: After completion of asbestos removal and clean-up operations, comply with the following requirements:

1. The Asbestos Abatement Firm representative, in presence of Owner's consultant, shall inspect the entire work area for asbestos. Include decontamination unit, all plastic sheeting, seals over doorways, windows, and all other openings.
   a. If any suspect asbestos is found, repeat final cleaning operation, until the visual inspection is satisfactory to the Owner's consultant and the asbestos removal firm. Asbestos not scheduled to be removed as part of the project is exempt.
2. Encapsulate all walls, floors, ceilings, other exposed surfaces, and decontamination facilities after completing the work area inspection.
   a. Remove the inner polyethylene barrier that is not integral to maintaining negative pressure in the enclosure at this time, and post-abatement air samples will be collected by Owner's consultant. Immediately clean any asbestos-containing materials observed behind these secondary barriers.
3. When post-abatement fiber levels are greater than either 0.01 fiber/cc or background level, repeat cleanup operation until the area is below either 0.01 fibers/cc or background level.
4. When the post-abatement samples are in compliance, and the Owner's consultant or EHS has completed the visual inspection, the enclosure shall be removed.
   a. Turn off HEPA filter exhaust units only after all barriers have been removed.
   b. A final visual inspection will be conducted by the Owner's consultant or EHS representative before the Contractor is released from the removal site. The final inspection will include tape, polyethylene sheet, debris, and equipment.

3.3 FIELD QUALITY CONTROL

A. Pre-Notification of EHS Representative: To permit adequate time to schedule air monitoring, notify the EHS representative not less than 10 calendar days prior to planned start of all removal operations.

   1. Roofing removal Contractors may provide their own air monitoring in compliance with roofing removal requirements of this Section.

B. Inspection: If during the project, EHS representative or Owner's consultant determines that work practices either violate applicable rules and regulations or endanger employees, the Contractor's on-site representative shall stop operations immediately and take corrective action. Cooperate fully with EHS representative and Owner's consultant.

3.4 REMOVAL OF NON-FRIABLE ASBESTOS-CONTAINING MATERIALS

A. Removal of Non-Friable Materials, General: For each type of non-friable asbestos-containing material indicated, comply with the following requirements:

   1. Comply with requirements of Article 3.1 of this Section.

2. Conduct non-friable material removal operations to prevent the material from becoming friable during the removal and disposal process. No visible emissions are permitted. If the material does not remain substantially intact, comply with the requirements for friable asbestos removal specified in Articles 3.2 of this Section (except roofing removal).
3. Place impermeable dropcloths on surfaces beneath removal activity.
4. Do not conduct asbestos removal unless the Owner's Consultant is present at the site and EHS has been notified. For roofing removal projects, notify EHS prior to start of work.
5. Labeling Containerized Waste: Comply with the requirements of Article 3.2, paragraphs B.9.a. through c. of this Section.

B. Non-Friable Asbestos-Containing Roofing Materials: Non-friable asbestos-containing roofing materials may be removed in a non-friable state. This specification does not apply to removal of intact cements, coatings, or mastics. Obtain EHS review and approval of planned removal operations prior to beginning. Remove non-friable asbestos-containing roofing materials in using the following technique:

1. Each employee who is likely to disturb or handle asbestos material shall have completed an 8-hour training class, and the project shall be supervised by a competent person who has completed the appropriate contractor/supervisor course.
2. Isolate roof level heating and ventilation air intake sources within the regulated area and others that will be affected; or arrange for shut-down the affected ventilation system during removal operations. Acceptable isolation techniques include the following:
   a. Use 20-foot or larger buffer zones.
   b. Installation of HEPA filters over the air intakes.
   c. Erection of horizontal or vertical extensions that relocate the opening of the intake outside or above the regulated area.
   d. Covering the intake with plastic sheeting or other appropriate barrier.
3. Personal protective equipment (PPE), including disposable coveralls and NIOSH approved appropriate high efficiency particulate absolute (HEPA) respirators, shall be worn by personnel if the asbestos containing material is not removed in an intact state.
4. Remove roofing material in an intact state.
5. Use wet methods to remove materials that are not intact, or that are rendered not intact during removal, except where wet methods will create a safety hazard or are otherwise not feasible.
6. Continuously apply a water mist to the blade of power cutting tools, unless a competent person determines that misting will substantially decrease worker safety.
7. When removing roofing felts, collect the dust generated by power roof cutters with a HEPA-filtered dust collector; or immediately vacuum using a HEPA-filtered vacuum along the cut line. For smooth surfaces only, gently sweep wet dust generated from cutting operations, and carefully and completely wipe up the still-wet dust and debris.

8. For removal and repair operations of intact roofing less than 25 sq. ft. in area, the use of wet methods or HEPA vacuuming is not required, provided manual methods do not render the material non-intact and no visible dust is created.
9. Do not drop or throw to the ground asbestos-containing roofing material that has been removed. As soon as practicable, but not later than the end of the work shift, lower debris to ground either by passing or carrying by hand, or by lowering to the ground in a covered, dust-tight chute, crane or hoist.
    a. While on the roof, keep non-intact asbestos-containing materials wet; or seal in impermeable waste bags, or wrap in plastic sheeting.
    b. While on the roof, intact asbestos-containing material is not required to be kept wet, bagged, or wrapped.
10. Upon being lowered to the ground, transfer unwrapped material to a closed receptacle in manner that precludes the dispersion of dust. Dispose of the material in an asbestos-accepting Type II landfill. Notify the landfill that the roofing material contains asbestos and provide waste shipment records to EHS within 35 days.
11. For removal of intact pipeline asphaltic wrap or roof flashings that contain asbestos, engage a competent person to examine the material and determine whether the material is intact and likely to remain intact during removal. Remove the material using manual methods. Sanding, grinding, or other abrading operations are not permitted. Do not throw or drop materials to the ground. Lower the material in a covered, dust-tight chute, crane, or hoist. Remove debris from the roof at the end of the work shift.

3.5 SCHEDULE OF ITEMS CONTAINING ASBESTOS

A. Bidding Requirements: Comply with the following requirements related to bidding:

1. Survey quantities provided are approximate. Bidders are required to field investigate as necessary and assume all responsibility to verify the work required and quantities involved for complete asbestos abatement.
2. The building is open for field inspection by all bidders during the bidding period.
3. A "pre-bid orientation meeting" will be conducted to familiarize prospective bidders with site conditions and provide for verification of marked and scheduled quantities, as applicable.

B. The following items have been surveyed and determined to have asbestos as a component:

1. Roofing felts and base flashing.
2. Roofing underlayment.

END OF SECTION 028215

UNIVERSITY OF MICHIGAN
ARCHITECTURE, ENGINEERING AND CONSTRUCTION

ARCHITECTURE & ENGINEERING
326 East Hoover, Mail Stop B
Ann Arbor, MI 48109-1002
Phone: 734-764-3414
Fax: 734-936-3334

BuildingName
The Description of the Project
P00000000 0000

SPECIFICATION DIVISION 2

NUMBER SECTION DESCRIPTION

DIVISION 02 EXISTING CONDITIONS
SECTION 028300 - LEAD REMEDIATION

END OF CONTENTS TABLE

DIVISION 02 EXISTING CONDITIONS
SECTION 028300 - LEAD REMEDIATION

DO NOT USE THIS SPEC FOR RENOVATION, REPAIR AND PAINTING (RRP) WORK IN CHILD CARE FACILITIES, FAMILY HOUSING, RESIDENTIAL PROPERTIES AND HALL DIRECTOR/OTHER APARTMENTS WITHIN RESIDENCE HALLS. CONTACT OSEH DIRECTLY FOR ASSISTANCE IN DEVELOPING A CUSTOM SPEC FOR THESE FACILITIES.

THIS SECTION DESCRIBES REQUIREMENTS FOR INSTALLATION, REMOVAL AND DISPOSAL OF LEAD-CONTAINING MATERIALS (LCM) DURING DEMOLITION OR RENOVATION ACTIVITIES.

SURVEY ALL BUILDING COMPONENTS WHICH MAY CONTAIN LEAD OR BE COVERED WITH LEAD-BASED PAINT (LBP), INCLUDING WALLS, CEILING, FLOORS, AND STRUCTURAL STEEL. CONTACT OSEH EARLY DURING THE DESIGN PHASE FOR A LEAD-PAINT SURVEY TO DETERMINE EXTENT AND CONCENTRATION OF LEAD-BASED PAINT, IF ANY. BRETT GOECKE IS THE OSEH CONTACT FOR LEAD-PAINT SAMPLING.

INCLUDE OSEH IN ANY PRE-CONSTRUCTION MEETINGS FOR PROJECTS INVOLVING LBP DISTURBANCE.

FOR DRY SANDBLASTING, WELDING, BURNING, OR OTHER OPERATIONS THAT CREATE SIGNIFICANT AMOUNTS OF AIRBORNE DUST, FUME OR LIQUID WASTE, OSEH MUST REVIEW AND APPROVE THE PROPOSED METHODS OF PAINT DISTURBANCE.

PART 1 - GENERAL

1.1 SUMMARY

A. This Section specifies requirements for working with lead-containing materials (LCM), during any of the following operations:

DELETE OR MODIFY BELOW TO SUIT PROJECT CONDITIONS.

1. Demolition of Lead-Containing Materials (LCM): Includes razing a building or any portion of a building or piece of equipment with LCM.
2. Incidental Removal or Disturbance of Lead-Based Paint (LBP): This includes activities such as sanding and scraping for paint preparation activities.
3. Removal of Lead-Based Paint (LBP): Complete removal of LBP from substrate, typically prior to torch cutting for demolition activities.
4. Removal or installation of lead sheet products as follows:
   a. Radiation shielding.
   b. Soundproofing.
   c. Flashing.
   d. Pipe, sink traps and sinks.

B. Extent of known LCM is as follows:

SELECT ONE OF THE FOLLOWING PARAGRAPHS REGARDING EXTENT OF WORK OR MODIFY TO REFLECT PROJECT SCOPE.

1. As shown on drawings and survey reports. Assume all paint or other coatings not identified on drawings or reports contain lead.
2. Marked at the site during the pre-bid inspection "walk through."

1.2 RELATED SECTIONS

A. Demolition and removal of items not containing lead as a component is included in Division 02 Section "Selective Demolition."

1.3 DEFINITIONS

A. The term “Lead-Based Paint” (LBP) is identified as paint or other surface coating such as varnish, sealer or stain containing lead in any detectable amount.

B. The term "Incidental Removal or Disturbance of Lead-Based Paint" indicates one or more of the following operations:

1. Scraping, hand sanding, or otherwise removing loose LBP from existing surfaces scheduled to remain in place.

C. The term “Demolition of LCM” refers to cutting, drilling, abrading, demolishing, or otherwise disturbing building elements coated with LBP or containing lead.

D. The term “Lead-Containing Materials” (LCM) is identified as construction debris coated with lead-based paint or other materials containing lead, such as x-ray shielding.

E. The term "Critical Barrier" indicates the perimeter of the enclosure within which lead disruption/removal work takes place. Critical Barriers may include existing floor, wall, and ceiling structures, as well as constructed partitions, closures and seals.

F. The term "Project Site" indicates the limits of the Project Site as indicated on drawings or by provisions of this specification.

G. The term "Work Area" indicates the area within the Critical Barrier.

H. The term “Action Level” means exposure to an airborne concentration of lead of 30 micrograms per cubic meter of air calculated as an 8-hour time-weighted average (TWA).

I. The term “Exposure Assessment” means a determination of employee exposures for a given task measured by air monitoring. The Assessment must meet the criteria for objective data as outlined in the MIOSHA/OSHA Lead in Construction Standard (MIOSHA Part 603, R325.51992 and 29 CFR 1926.62).

J. The term “OSHA PEL” stands for the Permissible Exposure Limit established by the Occupational Safety and Health Administration for lead exposure. The OSHA PEL refers to an airborne concentration of lead of 50 micrograms per cubic meter of air calculated as an 8-hour time-weighted average (TWA).

K. The abbreviation “TCLP” stands for Toxicity Characteristic Leaching Procedure and refers to one of the tests to determine if waste is considered a Hazardous Waste or non-hazardous solid waste.

L. The term “Hazardous Waste” refers to a listed waste or any solid or liquid waste with one or more of the following characteristics: toxic, corrosive, flammable, explosive, combustible, oxidizer, pyrophoric, unstable (reactive) or water - reactive.

M. The term “Non-Hazardous Waste” refers to any solid or liquid waste not exhibiting characteristics of Hazardous Waste.

N. The term "EHS-HMM" refers to Owner's Environment, Health and Safety Department - Hazardous Materials Management Program 1239 Kipke Drive, Ann Arbor, MI 48109-1010, phone (734)763-4568.

1.4 SUBMITTALS

A. Exposure Assessment Documentation: Submit to EHS

B. All information used to document previous employee exposure assessments, if available. If not available, conduct an initial exposure assessment at the start of the project.

C. Written Compliance Plan: Submit to EHS a Written Compliance Plan incorporating all requirements in the MIOSHA Lead in Construction Standard. Also indicate type of containment and method of liquid waste capture to be established if water is utilized for removal.

D. Health and Safety Requirements: Submit to EHS the following information for each employee that will conduct lead disturbance on the job site:

1. Respiratory Protection Program.
2. Proof of current fit test for respirator that will be worn on Project Site.
3. Proof of medical surveillance for respirator usage and lead work.
4. Proof of lead awareness training in accordance with section 1.5. QUALITY ASSURANCE.

E. Prepare a written schedule for each operation expected to disturb/remove LCM, indicating the following:

1. Type of work to be performed, such as cutting, demolition, paint removal, or other action.
2. Location of work to be performed.
3. Proposed starting date and time.
4. Proposed working hours.
5. Proposed duration.

F. Waste Container Order: If necessary, submit an order for hazardous waste containers (pails, drums, or dumpsters) to EHS-HMM not less than 10 working days prior to beginning LBP disruption/removal work. Containers are not needed for demolition waste with LBP that has been TCLP tested and found to be non-hazardous Contact EHS-HMM (734)-763-4568 to order containers and labels. The following information should be submitted with the order:

1. Location
2. Work activities/methods
3. Estimated number of pails, drums or dumpsters needed for both solid and liquid waste.

G. All submissions must be directed to EHS.

1.5 QUALITY ASSURANCE

A. Personnel involved in the disturbance of LCM shall be trained in accordance with the requirements of the MIOSHA Lead in Construction Standard, including:

1. The content of the MIOSHA Lead in Construction Standard and its appendices;
2. The specific nature of the operations which could result in exposure to lead above the action level;
3. The purpose, proper selection, fitting, use, and limitations of respirators;
4. The purpose and a description of the medical surveillance program, and the medical removal protection program including information concerning the adverse health effects associated with excessive exposure to lead (with particular attention to the adverse reproductive effects on both males and females and hazards to the fetus and additional precautions for employees who are pregnant);
5. The engineering controls and work practices associated with the employee's job assignment including training of employees to follow relevant good work practices;
6. The contents of any compliance plan in effect;
7. Instructions to employees that chelating agents should not routinely be used to remove lead from their bodies and should not be used at all except under the direction of a licensed physician; and
8. The employee's right of access to records under 29 CFR 1910.20.

PART 2 - PRODUCTS (NOT APPLICABLE)

PART 3 - EXECUTION

3.1 HEALTH AND SAFETY REQUIREMENTS

A. General: Determine employee exposure to lead in air as required in MIOSHA Lead in Construction Standard.

B. Exposure Assessment: If the Contractor has made a previous Exposure Assessment that is representative of the task to be performed on-site, the Contractor may rely on this data and determine the need for personal protective equipment and work practice controls based upon this data, if approved by EHS.

C. Job requirements: When the Contractor does not have an Exposure Assessment or the Assessment is determined to be insufficient, the Contractor must conduct personal air monitoring in accordance with the MIOSHA Lead in Construction Standard and follow the requirements below which are outlined by job task until monitoring determines otherwise:

1. Manual demolition, scraping, sanding, heat gun application, power tool cleaning with HEPA dust collection system, spray painting with LCM:
   a. Use of 1/2 mask respirator with HEPA filters.
   b. PPE.

c. Medical surveillance.
d. Use of changing room.
e. Use of handwashing facilities.
f. Provision of lead awareness training.

2. Using lead mortar, lead burning, rivet busting, power tool cleaning without HEPA collection, cleaning up with dry expendable abrasives, removing or relocating enclosure:
   a. Loose fitting PAPR with HEPA or supplied air respirator.
   b. PPE.
   c. Medical surveillance.
   d. Use of changing room.
   e. Use of handwashing facilities.
   f. Provision of lead awareness training.

THE TECHNIQUES USED IN THE PARAGRAPH BELOW SHOULD BE USED ONLY IF NO OTHER ALTERNATIVES ARE AVAILABLE AND AFTER CONSULTATION WITH OSEH. DELETE THE PARAGRAPH BELOW IF OSEH WILL NOT ALLOW THESE TECHNIQUES IN THE PROJECT.

3. Abrasive blasting, welding, using cutting torch, burning (Contact EHS for alternatives before using these methods):
   a. Supplied air respirator or SCBA.
   b. PPE
   c. Medical surveillance.
   d. Use of changing room.
   e. Use of handwashing facilities.
   f. Provision of lead awareness training.

3.2 PREPARATION

A. General: Prepare Work Areas in a manner that will protect Owner's personnel and property, and the visiting public, from contact with LCM. Prior to beginning work, confirm starting date and time with Owner. Do not begin work that will disturb LCM without Owner's approval.

DELETE PARAGRAPH BELOW IF NO REMOVAL WORK ON BUILDING EXTERIOR.

B. Preparing Building Exteriors: Ensure adequate measures are in place to limit airborne lead content below the Action Level of 30 ug/m^3 (micrograms per cubic meter) adjacent to the Work Area.

1. Erect barricades and install warning tape or signs as necessary to prevent inadvertent exposure of passersby to LCM in all forms, including, but not necessarily limited to dust, particles, and fumes.
2. Completely cover grounds and vegetation with minimum 8-mil thick polyethylene sheets with joints between sheets lapped and taped; with one edge taped to adjacent building surfaces below area of work; and with free ends secured in position with stakes, tie-down lines or weights. Cover sufficient ground area to capture wind-blown chips, dust and particles.

DELETE PARA BELOW IF NO REMOVAL WORK WITHIN BUILDING.

C. Preparing Building Interiors: Ensure adequate measures are in place to protect building occupants from exposure to airborne lead dust, particles, fumes or other LCM exceeding the Action Level of 30 ug/m^3 (micrograms per cubic meter) lead content in air. Adequate measures shall include, but are not necessarily limited to, construction of Critical Barriers and/or establishment of negative pressure within Work Area.

1. Seal off openings and penetrations into the Work Area. Provide temporary dust barriers consisting of at least polyethylene plastic sheet on wood studs. Lap and tape joints of plastic sheeting to prevent dust, particles, fumes, and other forms of lead debris from leaving the enclosed area.
2. Discontinue building ventilation within the Work Area and seal off ventilation supply and return or exhaust diffusers, grilles or openings.
3. Post warning signs at all entrances to the Work Area that state the following, as required in MIOSHA Lead in Construction Standard:

   DANGER
   LEAD WORK AREA
   MAY DAMAGE FERTILITY OR THE UNBORN CHILD
   CAUSES DAMAGE TO THE CENTRAL NERVOUS SYSTEM
   DO NOT EAT, DRINK OR SMOKE IN THIS AREA

3.3 WORK PRACTICES

A. General: Perform any removal, demolition or disturbance of LCM in compliance with the following requirements:

1. Restrict access to Work Area to essential personnel.
2. Use moist-removal methods and/or HEPA vacuuming where applicable. Do not over-saturate the Work Area.
3. Any debris generated must be cleaned up immediately before it can be tracked into other areas.
4. Remove contaminated clothing and personal protective equipment before leaving the Work Area, or Work Area enclosure, as applicable.
5. If the Action Level is exceeded outside the Work Area, discontinue work and modify Critical Barrier, or perform other modifications of methods or materials as required to reduce the lead contamination below the Action Level.
6. Prohibit eating, drinking, and smoking in the Work Area.

THE PARAGRAPH BELOW COVERS BOTH LARGE AND SMALL PAINT REMOVAL PROJECTS, FOR BOTH EXTERIORS AND INTERIORS. DELETE ONLY IF NO PAINT PREP IS REQUIRED.

B. Incidental Removal of LBP: Remove paint from building surfaces by hand scraping and sanding; or through the use of fluid-applied chemical strippers designed to dry into a solid polymeric sheet and peel off with paint encapsulated. Hand-scraping and sanding must be used in conjunction with moist-removal methods using misted water. Leave moist paint dust and chips in place to air dry before collection. Contact EHS as soon as removal has begun.

1. Wet methods (including power-washing) that use amounts of water that can drip, spill, or leak onto the ground, or onto or into other adjacent surfaces are prohibited unless approved by EHS.
2. Dry removal methods (including sand blasting, power sanding, and other methods relying on high velocity mechanical abrasion) that create airborne fine particulate waste materials are prohibited unless specifically reviewed and approved by EHS.
3. Prior to torch-cutting building elements containing LBP, remove paint within four inches of centerline of cut in accordance with requirements of this Section.

DELETE PARAGRAPH BELOW IF NO SOLID SHEET REMOVAL. BELOW ASSUMES THAT LEAD IS NOT CONTAMINATED BY RADIATION OR REGULATED CHEMICALS. IF CONTAMINATION IS POSSIBLY PRESENT, CONSULT WITH OSEH REGARDING DECONTAMINATION OR DISPOSAL AS HAZARDOUS MATERIAL.

C. Removal of Solid Lead Sheeting: Remove and stockpile solid lead sheet materials in a manner that will not result in the contamination of Work Area or Project Site. Remove sheet products in the largest sections possible. Do not unnecessarily cut or abrade lead sheet materials. Provide minimum 8-mil thick plastic sheet covering between solid lead stockpiles and walls, floors, paving or ground as applicable.

1. Do not separate lead sheet materials that are adhesively laminated to gypsum substrates. Remove and dispose as lead hazardous waste all gypsum board with lead laminate attached.

3.4 DISPOSAL

A. Lead Painted Demolition Debris and Lead Paint Chips: Prior to removal of waste from the site, coordinate Toxicity Characteristic Leaching Procedure (TCLP) testing of LCM waste with EHS-HMM. Allow two weeks for testing results. If TCLP testing shows the waste to be nonhazardous, the waste can be disposed of as normal construction demolition debris. If waste is classified as Hazardous or has not been TCLP tested, comply with the following requirements:

1. Collect and place solid and liquid waste in Owner-provided containers.
2. Store waste containers in a secure area (preferably a locked room at the project site. Set containers securely on a hard surface which is accessible to EHS drum carts. Do not stage containers on lawns, dirt piles, gravel drives, areas with mud or basement areas with no elevator access.
3. Ensure that soil, ground water, and drains or sewers within the storage area are protected from possible contamination. Keep containers secure and tightly closed at all times, except when adding waste.
4. Keep lead waste segregated from other waste. Do not co-mingle waste. **DO NOT MIX LIQUID AND SOLID WASTE.**

5. Place appropriate labels on all containers. Provide all information required on the label; mark labels using indelible ink. The name of the "Waste Generator" is as follows:
   a. “Campus Area” 1655 Dean Road, Ann Arbor, Michigan 48109.
   b. Contact EHS at the start of the project (734-763-4568) for proper generator name and site address.
6. Mark the side of each container with the name and phone number of Owner’s Representative knowledgeable about the type of waste contained.
7. Do not remove waste from Project Site.

B. Disposal of hazardous lead waste shall be done in coordination with EHS-HMM.

1. Contact EHS-HMM at least one week in advance to request pick-up of the containers.
2. EHS will pickup and dispose of properly packaged and staged hazardous lead waste at no cost to the contractor. Call the EHS-HMM Program at 734-763-4568 to schedule a pickup immediately after lead waste has been staged.

C. Disposal of Non-Hazardous LCM from Demolition/Renovation Activities: Collect non-hazardous LCM waste in a covered dumpster and dispose of the waste at a Type II or III landfill. For projects where large amounts of hazardous waste are generated, EHS may allow for transportation and disposal of waste by a qualified contractor. If applicable, contact EHS for additional transportation and disposal requirements.

3.5 CLEAN UP

A. Upon completion of LCM or LBP removal and disposal operations, clean all surfaces within the Work Area before it can be tracked into other areas, including, but not necessarily limited to the following:

1. Siding.
2. Steel support structures.
3. Floors and ground.
4. Walls.
5. Window sills.
6. Trim.
7. Ledges and projections.

B. For projects within building interior spaces, use a HEPA filtered vacuum for removal/elimination of dust, particulates, and debris.

1. Brushing, brooming and other dry methods that generate airborne dust are prohibited.

C. Remove and dispose of wash water and HEPA filters as Hazardous Waste.

D. Remove and dispose of all solid waste used for protection and clean-up as Non-Hazardous Waste as indicated in Section 3.4, “Disposal of Non-Hazardous LCM from Demolition/Renovation Activities”.

E. Field Testing: Upon completion of removal, disposal, and clean-up operations, the Owner may visually inspect and/or test the Project Site for evidence of remaining lead contamination. Return to Project Site and, at no additional cost to Owner, re-clean areas found to be contaminated.

END OF SECTION 028300

UNIVERSITY OF MICHIGAN
ARCHITECTURE, ENGINEERING AND CONSTRUCTION

ARCHITECTURE & ENGINEERING
326 East Hoover, Mail Stop B
Ann Arbor, MI 48109-1002
Phone: 734-764-3414
Fax: 734-936-3334

BuildingName
The Description of the Project
P00000000 0000

SPECIFICATION DIVISION 2

NUMBER SECTION DESCRIPTION

DIVISION 02 EXISTING CONDITIONS
SECTION 028333 – LEAD REMEDIATION – RENOVATION, REPAIR AND PAINTING IN CHILD-OCCUPIED FACILITIES AND TARGET HOUSING

END OF CONTENTS TABLE

DIVISION 02 EXISTING CONDITIONS

SECTION 028333 – LEAD REMEDIATION – RENOVATION, REPAIR AND PAINTING IN CHILD-OCCUPIED FACILITIES AND TARGET HOUSING

DECEMEBER 2011

THIS SECTION IS TO BE USED FOR REMOVAL AND DISPOSAL OF LEAD CONTAINING MATERIALS (LCM) DURING RENOVATION, REPAIR AND PAINTING (RRP) WORK IN CHILD CARE FACILITIES, FAMILY HOUSING, RESIDENTIAL PROPERTIES AND HALL DIRECTOR/OTHER APARTMENTS WITHIN RESIDENCE HALLS. LEAD WORK WITHIN RESIDENCE HALL STUDENT ROOMS AND OTHER SPACES WITHIN RESIDENCE HALLS IS COVERED BY THE CONSTRUCTION LEAD SPECIFICATION, SECTION 028300. FOR LEAD ABATEMENT WORK (NOT RRP WORK) IN CHILD CARE FACILITIES ETC. CONTACT UM OSEH-IH&S (DANIELLE SHEEN 734-647-1142) FOR PROJECT SPECIFIC LEAD ABATEMENT SPECIFICATION DEVELOPMENT.

SURVEY ALL BUILDING COMPONENTS WHICH MAY CONTAIN LEAD OR BE COVERED WITH LEAD-BASED PAINT (LBP). THE SURVEY MUST BE CONDUCTED BY A CERTIFIED LEAD RENOVATOR. CONTACT OSEH EARLY DURING THE DESIGN PHASE FOR A LEAD-PAINT SURVEY TO DETERMINE EXTENT AND CONCENTRATION OF LEAD-BASED PAINT, IF ANY. BRETT GOECKE (734-647-2306) IS THE OSEH CONTACT FOR LEAD PAINT SAMPLING.INCLUDE OSEH IN ANY PRE-CONSTRUCTION MEETINGS FOR PROJECTS INVOLVING LBP DISTURBANCE.

IF AREAS OF LEAD PAINT DISTURBANCE ARE BELOW SIX SQUARE FEET (SF) FOR INTERIOR WORK AND 20 SF FOR EXTERIOR WORK, THE EPA RULE DOES NOT APPLY. CONSULT OSEH TO DETERMINE IF THE RULE APPLIES. THIS EXCEPTION DOES NOT APPLY TO WINDOW REPLACEMENT, DEMOLITION OR ANY PROHIBITED ACTIVITIES LSITED BELOW IN THE SPECIFICATION.

PART 1 - GENERAL

1.1 SUMMARY

A. This section specifies requirements when renovating, repairing or painting in target housing and child occupied facilities built before 1978. Activities impacting lead-based paint (LBP) that are subject to the requirements of this section include but are not limited to:

1. Remodeling and repair/maintenance.
2. Electrical work.
3. Plumbing repairs or improvements.
4. Painting.
5. Carpentry.
6. Window replacement.
7. Demolition of painted walls or ceilings.
8. Re-plastering.
9. Any other activities which disturb painted surfaces.

B. This section does not apply to lead abatement projects in housing and child occupied facilities. Lead abatement is work designed to permanently eliminate lead based paint hazards.

C. Extent of LBP is as follows:

SELECT ONE OF THE FOLLOWING THREE ITEMS REGARDING EXTENT OF WORK OR MODIFY TO REFLECT PROJECT SCOPE.

1. As shown on drawings.
2. All existing paint.
3. Marked at the site during the pre-bid inspection "walk through."

D. Prohibited Activities:

1. Prohibited activities include open flame burning/torching, using a heat gun above 1,100 degrees Fahrenheit (°F) and sanding, grinding, planing, needle gunning or blasting without a shroud and HEPA vacuum attachment.

1.2 RELATED SECTIONS

A. Demolition and removal of items not containing lead as a component are included in Division 02 Section "Selective Demolition."

1.3 DEFINITIONS

A. The term "Abatement" signifies any measure or set of measures designed to permanently eliminate lead-based paint hazards from the target housing or child-occupied facility as defined in 40 CFR part 745, subpart L. Abatement includes, but is not limited to:

1. The removal of lead-based paint and lead-contaminated dust, the permanent enclosure or encapsulation of lead-based paint, the replacement of lead-painted surfaces or fixtures, and the removal or covering of lead-contaminated soil.
2. Preparation, cleanup, disposal, and post-abatement clearance testing activities associated with such measures.

B. The term "Action Level" means an airborne concentration of lead of 30 micrograms per cubic meter of air calculated as an 8-hour time-weighted average (TWA).

C. The term “Certified Inspector or Risk Assessor” means an individual who has been trained and is certified by the Environmental Protection Agency (EPA) or the Michigan Department of Community Health to conduct lead-based paint inspections or risk assessments.

D. The term "Child-occupied Facility" means a building, or portion of a building, constructed prior to 1978, visited regularly by the same child, 6 years of age or under, on at least two different days within any week (Sunday through Saturday period), provided that each day’s visit lasts at least 3 hours and the combined weekly visit lasts at least 6 hours, and the combined annual visits last at least 60 hours. Child-occupied facilities may include, but are not limited to, day-care centers, preschools and kindergarten classrooms.

E. The term “Cleaning Verification Card” means a card developed and distributed, or otherwise approved, by the EPA for the purpose of determining, through comparison of wet and dry disposable cleaning cloths with the card, whether post-renovation cleaning has been properly completed.

F. The term “Common Area” means a portion of a building that is generally accessible to all residents or users. Common areas include (but are not limited to) hallways, stairways, laundry rooms, recreation rooms, playgrounds, community centers and fenced areas whether interior or exterior spaces.

G. The term “Component” means a specific design or structural element or fixture distinguished by its form, function, and location. A component can be located inside or outside the dwelling. Examples include (but are not limited to) ceilings, wall, floors, shelves, crown molding, trim, fences, handrails window sills and soffits.

H. The term "Containment" means a process to protect workers and the environment by controlling exposures to the lead-contaminated dust and debris created during a renovation, repair or painting project.

I. The term "Critical Barrier" indicates the perimeter of the enclosure within which lead disruption/removal work takes place. Critical Barriers may include existing floor, wall, and ceiling structures, as well as constructed partitions, closures and seals.

J. The term "Encapsulant” means a substance that forms a barrier between lead-based paint and the environment using a liquid-applied coating (with or without reinforcement materials) or an adhesively bonded covering material.

K. The term "Enclosure" means the use of rigid, durable construction materials that are mechanically fastened to the substrate in order to act as a barrier between lead-based paint and the environment.

L. The term "Exposure Assessment" means a determination of employee exposure for a given task measured by air sampling. The Assessment must meet the criteria for objective data as outlined in the MIOSHA/OSHA Lead in Construction Standard (MIOSHA Part 603, R325.51992 and 29 CFR 1926.62).

M. The term "Hazardous Waste" refers to a listed waste or any solid or liquid waste with one or more of the following characteristics: toxic, corrosive, flammable, explosive, combustible, oxidizer, pyrophoric, unstable (reactive) or water - reactive. This definition includes lead paint that has been removed from the substrate and has failed the TCLP for any reason.

N. The term "Inspection" means a surface-by-surface investigation to determine the presence of lead-based paint and the provision of a report explaining the results of the investigation.

O. The term "Lead-Based Paint" (LBP) is identified as paint or other surface coatings that contain lead equal to or in excess of 1.0 milligrams per square centimeter or more than 0.5 percent by weight or lesser value as defined by EPA.

P. The term "Non-Hazardous Waste" refers to any solid or liquid waste not exhibiting characteristics of Hazardous Waste. This definition includes lead-based paint not removed from substrate and not failing TCLP for other characteristics. It also includes lead paint chips that do not fail the TCLP for any reason.

Q. The term "EHS" refers to Owner's Environment, Health and Safety Department, 1239 Kipke Drive, Ann Arbor, MI 48109-1010, phone (734)647-1142.

R. The term "OSHA PEL" stands for the Permissible Exposure Limit established by the Occupational Safety and Health Administration for lead exposure. The OSHA PEL refers to an airborne concentration of lead of 50 micrograms per cubic meter of air calculated as an 8-hour time-weighted average (TWA).

S. The term “Renovation” refers to a modification of all or part of any existing structure that disturbs a painted surface, including (but not limited to) removal/modification of painted surfaces, components or structures, surface preparation activities and window replacement as defined in 40 CFR part 745, subpart E.

T. The term “Renovator” means a person who either performs or directs workers who perform a renovation. A certified renovator is a renovator who has successfully completed a renovator course accredited by the EPA or the Michigan Department of Community Health. Note: because the term renovation is broadly defined by the EPA rule “Lead-Based Paint Renovation, Repair and Painting Program” contractors such as electricians and plumbers may be considered “renovators” under this rule.

U. The term "Target Housing" refers to housing constructed before 1978, except for: housing for the elderly, dormitories, studio apartments, efficiencies, military barracks and rentals of individual rooms.

V. The term "TCLP" stands for Toxicity Characteristic Leaching Procedure and refers to one of the tests to determine if waste is to be disposed as a Hazardous Waste or non-hazardous solid waste.

W. The term “Wet Disposable Cleaning Cloth” refers to a commercially available, pre-moistened, white disposable cloth designed to be used for cleaning hard surfaces such as countertops and uncarpeted floors.

1.4 SUBMITTALS

A. All submittals must be directed to UM EHS. Submit documents requested in paragraphs B – E before start of project.

B. Project Information:

1. Copy of Firm Certification from the EPA or the State of Michigan Department of Community Health.
2. Schedule of renovation, repair and painting activities.
3. Length and number of shifts.
4. Certified supervisor name, crew size, length and number of shifts.

C. Written Compliance Plan: Submit to EHS a Written Compliance Plan incorporating all requirements in the MIOSHA Lead in Construction Standard. Also indicate type of containment and disposal to be established if water is utilized for removal.

D. Health and Safety Requirements: Information must be provided for all workers that will conduct renovation, repair and painting activities on site, including the following for each employee that will conduct lead disturbance on the job site:

1. Exposure Assessment Documentation, if available.
2. Respiratory Protection Program.
3. Proof of current fit test for respirator that will be worn on Project Site.
4. Proof of medical surveillance for respirator usage and lead work.
5. Proof of certified renovator training and accreditation for each supervisor on-site.
6. Proof of lead awareness training and medical approvals for all workers on-site.

E. Renovation Work Notification

1. Renovations in Housing or other Dwelling Units
   a. Occupants of units where renovations will take place must be provided with EPA's lead pamphlet "Renovate Right-Important Lead Hazard Information for Families, Child Care Providers and Schools".
   b. Obtain written acknowledgement from an adult occupant that the pamphlet has been received or certify in writing that the pamphlet has been delivered to the dwelling and the occupant refused to sign or was unavailable.
   c. Obtain a certificate of mailing at least 7 days prior to the renovation.
   d. The written certification must include the address of the unit undergoing renovation, the date and method of delivery of the pamphlet, name of person delivering the pamphlet, reason for lack of acknowledgement, the signature of a representative of the firm performing the renovation and the date of the signature.
2. Renovations in Common Areas
   a. Where renovations take place in common areas, occupants of affected units must be notified in writing. Such notification shall be accomplished by distributing the written notification to each affected unit.
   b. The notice shall describe the general nature and locations of the planned renovations activities, the expected start and ending dates and a statement of how the occupant can obtain the EPA lead pamphlet at no cost.
   c. Obtain a certificate of mailing at least 7 days prior to the renovation.

d. In place of the written notification to each affected unit the renovator may, while the renovation is ongoing, post in an area likely to be seen by occupants of all the units, informational signs describing the general nature and locations of the work and anticipated completion date. Additionally post a copy of the EPA lead pamphlet or information on how to obtain a copy free of charge from the renovator.
e. Prepare sign and date a statement describing the steps performed to notify all occupants of the intended renovation activities and to provide the pamphlet.
f. If the scope, locations or expected starting and ending dates change, re-notify the occupants prior to beginning additional renovation work.

3. Renovations in Child-Occupied Facilities
a. Child-occupied facilities where renovations will take place must be provided with the EPA's lead pamphlet "Renovate Right-Important Lead Hazard Information for Families, Child Care Providers and Schools".
b. Obtain written acknowledgement from an adult representative of the child-occupied facility that the pamphlet has been received or certify in writing that the pamphlet has been delivered to the child-occupied facility and the adult representative refused to sign or was unavailable.
c. Obtain a certificate of mailing at least 7 days prior to the renovation.
d. The written certification must include the address of the unit undergoing renovation, the date and method of delivery of the pamphlet, name of person delivering the pamphlet, reason for lack of acknowledgement, the signature of a representative of the firm performing the renovation and the date of the signature.
e. Provide the parents or guardians of children using the child-occupied facility with the pamphlet and the information describing the general nature and locations of the renovation and the anticipated completion date by mailing or hand-delivering the information. Or, while the renovation is ongoing, post in an area likely to be seen by the parents or guardians of the children frequenting the child-occupied facility, informational signs describing the general nature and locations of the work and anticipated completion date. Additionally post a copy of the pamphlet or information on how to obtain a copy free of charge from the renovator.
f. Prepare sign and date a statement describing the steps performed to notify all parents and guardians of the intended renovation activities and to provide the pamphlet.
g. Any written acknowledgements required above must include the occupant's name and acknowledgement that the pamphlet was received prior to the renovation, the address of the facility undergoing renovation and the dated signature of the occupant.

F. Waste Drum Order: Submit order for waste drums to EHS not less than 10 working days prior to beginning LBP disruption/removal work. The following information should be submitted with the order:

1. Location.
2. Work activities/methods.
3. Estimated number of barrels/drums needed for both solid (paint chips) and liquid waste (wash water).

G. Prior to application for final payment, submit a renovation report prepared by a certified renovator. The report should include the following:

1. Start and completion dates of project.
2. The name and address of each certified person conducting the renovation and the name of each supervisor assigned to the project.
3. A detailed written description of the project, including all of the following:
   a. Renovation methods used.
   b. Locations of rooms and components where renovation, repair and painting occurred.
   c. Results of Visual Inspection and Cleaning Verification.

PART 2 - PRODUCTS (NOT APPLICABLE)

PART 3 - EXECUTION

3.1 LEAD RENOVATION, GENERAL

A. Conduct lead renovation, repair and painting activities in accordance with all state and federal regulations and guidelines.

B. Assign a Certified Renovator to the project who will remain on-site during all renovation, repair and painting work.

C. Maintain at each job site and post the following documents:

1. Employee Respiratory Protection Program.
2. Michigan Right-To-Know poster.
3. Material Safety Data Sheet locator.
4. Company standard operating procedure.
5. This specification section.
6. Material Safety Data Sheets for products used on job.
7. EPA or Michigan Department of Community Health Renovator Certificates for each supervisor (initial and the most recent refresher).
8. Proof of lead awareness training and medical approvals for all workers on-site.
9. For renovations in common areas and child care facilities post a written notification detailing the general nature and locations of the work and anticipated completion date.
10. For renovations in common areas and child care facilities post a copy of the EPA lead pamphlet “Renovate Right-Important Lead Hazard Information for Families, Child Care Providers and Schools”.

D. Open-flame burning or torching of lead-based paint is prohibited.

E. Machine sanding, grinding, abrasive blasting and sandblasting of lead-based paint is prohibited, unless the sanding, grinding, blasting, or sandblasting is conducted using a shrouded tool with a high-efficiency particulate air (HEPA) exhaust control that removes particles of 0.3 microns or larger from the air at an efficiency of 99.97% or more.

F. Dry scraping of lead-based paint is permitted only in conjunction with heat guns or around electrical outlets. Operating a heat gun on lead-based paint is permitted only if the temperature generated by the heat gun is less than 1,100 °F.

3.2 HEALTH AND SAFETY REQUIREMENTS

A. General: Determine employee exposure to lead in air as required in MIOSHA Lead in Construction Standard.

B. Exposure Assessment: If the Contractor has made a previous Exposure Assessment that is representative of the task to be performed on-site, the Contractor may rely on this data and determine the need for personal protective equipment and work practice controls based upon this data, if approved by EHS.

C. Personal Air Monitoring: When the Contractor does not have an Exposure Assessment or the Assessment is determined to be insufficient, the Contractor must conduct personal air sampling in accordance with the MIOSHA Lead in Construction Standard and follow all State and Federal regulations and procedures as covered in Certification Training courses.

3.3 PREPARATION

DELETE PARGRAPH BELOW IF NO RENOVATION WORK ON THE EXTERIOR.

A. General: Prepare Work Areas in a manner that will protect Owner's personnel and property and contain the work area so that no dust or debris leaves the work area.

B. Preparing Building Exteriors: Ensure adequate measures are in place to prevent dust and debris from escaping the work area and to limit airborne lead content below the Action Level of 30 ug/m3 (micrograms per cubic meter) adjacent to the Work Area.

1. Close all doors and windows within 20 feet of the renovation on the same floor and all doors and windows on floors below the renovation area.
2. Ensure that doors within the work area that will be used while the job is being performed are covered with plastic sheeting in a manner that allows workers to pass through while confining the dust and debris.
3. Erect barricades and install warning tape or signs as necessary to prevent inadvertent exposure of passersby to LBP in all forms, including, but not necessarily limited to dust, particles, and fumes.

4. Completely cover grounds and vegetation extending 10 feet beyond the perimeter or a sufficient distance to collect falling debris with minimum 8-mil thick polyethylene sheets with joints between sheets lapped and taped; with one edge taped to adjacent building surfaces below area of work; and with free ends secured in position with stakes, tie-down lines or weights. Cover sufficient ground area to capture wind-blown chips, dust and particles. Contractor is responsible for any paint debris found at project completion.

DELETE PARAGRAPH BELOW IF NO RENOVATION WORK WITHIN THE BUILDING

C. Preparing Building Interiors:

1. Discontinue building ventilation within the Work Area and seal off ventilation supply, return or exhaust diffusers, grilles or openings.
2. Remove all objects from the work area or cover with plastic sheeting with all seams and edges sealed.
3. Close windows and doors in the work area to form a Critical Barrier. Doors must be covered with plastic sheeting.
4. Cover the floor surface a minimum of six feet beyond the perimeter of the surfaces undergoing renovation or a sufficient distance to contain the dust, whichever is greater.
5. Post warning signs at all entrances to the Work Area that states the following, as required in MIOSHA Lead in Construction Standard:

DANGER
LEAD WORK AREA
MAY DAMAGE FERTILITY OR THE UNBORN CHILD
CAUSES DAMAGE TO THE CENTRAL NERVOUS SYSTEM
DO NOT EAT, DRINK OR SMOKE IN THIS AREA

3.4 WORK PRACTICES

A. General: Perform renovation of LBP coated materials in compliance with the following requirements:

1. Restrict access to Work Area to essential personnel.
2. Use moist-removal methods where applicable. Do not over-saturate the Work Area.
3. Remove contaminated clothing and personal protective equipment before leaving the Work Area, or Work Area enclosure, as applicable.
4. If dust or debris is escaping the Work Area or if the Action Level is exceeded outside Work Area, discontinue work and modify Critical Barrier, or perform other modifications of methods or materials as required to prevent dust and debris from escaping.
5. Prohibit eating, drinking, and smoking in the Work Area.
6. Collect and contain all paint chips, debris, personal protective equipment and protective sheeting, daily. Seal in heavy duty bags or drums to prepare for proper disposal.

7. Use precautions (such as tack mats, shoe covers, HEPA vacuuming and or wet wiping) to ensure that all personnel, tools, waste containers and other items are free of dust and debris when leaving the area.

3.5 POST RENOVATION CLEANING

A. Upon completion of work, mist the plastic sheeting and fold the plastic containment sheeting dirty side inward, after misting and seal edges or dispose of plastic in sealed bags.

B. Brushing, brooming and other dry methods that generate airborne dust are prohibited.

C. Remove and dispose of all solid waste used for protection and clean-up as Non-Hazardous Waste as indicated in Disposal Article (2.6) below.

D. Clean all objects and surfaces within project area, and two feet beyond, per the methods detailed below, always cleaning higher to lower.

1. Clean walls starting at the ceiling and working down to the floor by either vacuuming with a HEPA vacuum or wiping with a damp cloth.
2. Thoroughly vacuum all remaining surfaces and objects in the work area including furniture and fixtures, with a HEPA vacuum. The HEPA vacuum must be equipped with a beater bar when vacuuming carpets and rugs.
3. Wipe all remaining surfaces and objects in the area, except for carpeted and upholstered surfaces with a damp cloth. Mop uncarpeted floors thoroughly, using a mopping method that keeps the wash water separate from the rinse water, such as the 2-bucket mopping method or using a wet mopping system. Properly contain all wash water for testing to determine if it is hazardous. Dispose wash water as Hazardous Waste if testing indicates that it is hazardous. If testing indicates that it is non-hazardous filter for particulates and dispose of in a sanitary drain. Do not dispose of wash water in storm drains.

E. After cleanup is complete a Certified Renovator must perform a visual inspection to determine if dust, debris or residue is present. If dust, debris or residue is present the area must be re-cleaned and the visual inspection repeated.

F. After the visual inspection has passed, exterior areas are considered clean. Cleanup of interior areas must be further verified. Start the post renovation cleaning verification process with windows sills and then proceed to uncarpeted floors and countertops, cleaning higher to lower as detailed below:

1. The Certified Renovator must wipe, with a wet disposable cleaning cloth that is damp to the touch, each window sill, uncarpeted floor and countertop within the work area and compare the cleaning cloth to the cleaning verification card. If the cleaning cloth is darker than the verification card cleaning must be repeated. If it is not, then cleaning is complete.

2. Each window sill in a project area must be wiped with a separate cleaning verification cloth.
3. Uncarpeted floors and countertops in the project areas must be less than 40 square feet (sf). If the surface is larger than 40 sf, the work area must be divided into roughly equal sections less than 40 sf.
4. Wipe each section separately with a new wet disposable cleaning cloth.
5. Floors must be wet wiped with an application device with a long handle and a head to which the cloth is attached.
6. For any areas that failed, repeat cleaning, wet wipe again and compare cloth again to the verification card. If the cleaning cloth is darker than the verification card, cleaning must be repeated. If the cleaning cloth is not darker than the verification card, cleaning is complete.
7. For any areas that have failed two wet wipes, wait until the area has dried completely or 1 hour has passed, whichever is longer. Once dry, wipe that area with a dry disposable cleaning cloth and consider the area adequately cleaned.

G. Contractor is responsible for re-cleaning any areas that do not pass applicable cleaning verification standards. The Owner or Owners Consultant may dictate the method of cleaning to reach clearance.

H. The Owner reserves the right to perform dust clearance sampling to determine if a renovated area is free of lead hazards.

I. Remove all warning signs and tape after proper cleaning has been verified.

3.6 DISPOSAL

A. Disposal of Non-Hazardous Lead-Based Paint or Lead-Based Paint Components: Collect Non-hazardous LBP waste in a covered dumpster and dispose of the waste at a landfill.

B. Project Waste (LBP paint and wash water only): Coordinate testing, collection, and removal of waste from the Project Site with EHS. Where testing of waste indicates waste is Non-Hazardous, dispose as in Paragraph above, "Disposal of Non-Hazardous LBP or LBP Components. If waste is classified as Hazardous, comply with the following requirements:

1. Keep lead waste segregated from other waste and from other Projects. Do not co-mingle waste. Collect and place solid and liquid waste in Owner-provided drums. DO NOT MIX LIQUID AND SOLID WASTE.
2. Store containers in the Work Area within the Project Site, protected from physical damage, weather, fire hazard and vandalism. Ensure that soil, ground water, and drains or sewers within the storage area are protected from possible contamination. Keep containers secure and tightly closed at all times, except when adding waste.
3. Place appropriate labels on all containers. Provide all information required on the label; mark labels using indelible ink. The name of the "Waste Generator" is as follows: “Building Name” 1655 Dean Road, Ann Arbor, Michigan 48109.

4. Mark the side of each drum with the name and phone number of Owner's Representative knowledgeable about the type of waste contained.
5. Prepare a complete and accurate State of Michigan Hazardous Waste Manifest. Obtain approval from Owner's Representative (EHS) to assure correct Generator Name and US EPA Identification Number.

C. Disposal of LBP waste shall be done in coordination with EHS-Hazardous Materials Management (HMM).

1. Contact EHS-HMM at least one week in advance to request pick-up of the containers.
2. EHS-HMM will pickup and dispose of properly packaged and staged LBP waste at no cost to the contractor. Call the EHS-HMM Program at 734-763-4568 to schedule a pickup immediately after LBP waste has been staged.

END OF SECTION 028333

UNIVERSITY OF MICHIGAN
ARCHITECTURE, ENGINEERING AND CONSTRUCTION

ARCHITECTURE & ENGINEERING
326 East Hoover, Mail Stop B
Ann Arbor, MI 48109-1002
Phone: 734-764-3414
Fax: 734-936-3334

BuildingName
The Description of the Project
P00000000 0000

SPECIFICATION DIVISION 2

NUMBER SECTION DESCRIPTION

DIVISION 02 EXISTING CONDITIONS
SECTION 028400 - PCB REMEDIATION

END OF CONTENTS TABLE

DIVISION 02 EXISTING CONDITIONS
SECTION 028400 - PCB REMEDIATION

THIS SECTION DESCRIBES REQUIREMENTS FOR DEMOLITION AND DISPOSAL OF BUILDING MATERIALS SUSPECTED OF CONTAINING PCB'S. THIS APPLIES TO ALL SUSPECT PCB CONTAINING BUILDING MATERIALS TO BE DISTURBED DURING DEMOLITION OR RENOVATION. AEC MUST CONTACT OSEH EARLY IN THE DESIGN PHASE FOR A PCB SURVEY OF SUSPECT MATERIALS TO BE DISTURBED. OSEH WILL CONDUCT SAMPLING TO DETERMINE THE PRESENCE AND QUANTITY OF PCBS IN THE MATERIAL.

PART 1 - GENERAL

1.1 SUMMARY

A. This section specifies requirements for the demolition and disposal of PCB Bulk Product Waste (BPW). The requirements of this section apply to demolition or renovation of the following:

1. Material (paint, caulk and sealants etc.) previously determined or assumed to contain greater than 50 parts per million (ppm) PCBs.
2. Substrate contaminated (>50 ppm) by PCB paints, caulks and/or sealants etc., if removed at the same time as PCB BPW.

B. Extent of PCB-containing materials is as follows:

INSERT SURVEY INFORMATION HERE.

1.

1.2 DEFINITIONS

A. The abbreviation "PCB" stands for Polychlorinated Biphenyl.

B. The term "PCB bulk product waste" refers to waste derived from manufactured products containing PCBs in a non-liquid state, where the concentration at time of disposal is greater than or equal to 50 parts per million (ppm). This includes caulks, applied dried paints, varnishes, waxes, or other similar coatings or sealants.

C. The term "Project Site" indicates the limits of the project site as indicated on drawings or by provisions of this specification.

D. The term "work area" indicates the area within the critical barrier.

E. The term "critical barrier" indicates the perimeter of the enclosure within which PCB disruption/removal work takes place. Critical barriers may include existing floor, wall, and ceiling structures, as well as constructed partitions, closures and seals.

F. The term "EHS" refers to Owner's Environment, Health and Safety Department, 1239 Kipke Drive, Ann Arbor, MI 48109-1010, phone (734)747-1142.

1.3 RELATED SECTIONS

A. Demolition and removal of items not containing PCB as a component is included in Division 02 Section "Selective Demolition."

PART 2 - (NOT APPLICABLE)

PART 3 - EXECUTION

3.1 PCB BULK PRODUCT WASTE REMOVAL, GENERAL

A. Conduct PCB removal operations in a manner that fully protects Contractor's and subcontractor's employees, the general public, and building occupants from exposure to PCB's.

B. Protect adjacent areas, materials and surfaces from damage due to demolition operations, including but not necessarily limited to the following:

1. Water damage.
2. Dirt, dust and debris.
3. Abrasion.
4. Cuts and scratches.
5. Holes from fasteners for temporary barriers.

C. All removal shall be conducted within a regulated area that complies with the following requirements:

1. Establish a regulated area with caution tape and signage to keep unauthorized personnel out of the area.
2. Allow only authorized, properly protected personnel to enter the regulated area. Immediately report unauthorized individuals entering the work area to EHS or the Owner's consultant.

D. Provide respiratory protection to employees as required by current MiOSHA regulations including Part 451 Respiratory Protection and MiOSHA part 301 Air Contaminants.

1. Provide abatement workers with adequate respiratory protection during PCB BPW removal. At a minimum, half face respirators with HEPA cartridges must be used. If removal methods generate heat above 212°F, combination HEPA/organic cartridges must be used.
2. Provide personal protective equipment for protection against dermal exposures including nitrile gloves and Tyvek^{R} or similar suits.

E. Maintain at each job site and post the following documents:

1. Employee respiratory protection program.
2. Michigan Right-To-Know poster.
3. Material Safety Data Sheet locator.
4. Company standard operating procedure.
5. This specification Section.
6. Material Safety Data Sheets for products used on job.

F. Do not use any of the following equipment or work practices, regardless of measured exposure levels:

1. Dry sweeping or use of compressed air to clean work surfaces.
2. Removal of caulk using abrasive grinding wheels, wire wheels, sanding or other means that generate excessive dust.
3. Use of ordinary vacuums to clean up dust and debris. Vacuums with HEPA filtration must be used.

3.2 PCB BPW REMOVAL BY HAND METHODS

A. Preparation of the Work Area: Complete the following preparation work prior to beginning removal operations using hand methods (utility knife, hammer and chisel, putty knife etc.).

1. Seal intake and exhaust vents and duct seams within the regulated area with 1 layer of 6-mil polyethylene sheeting.
2. Protect all surfaces near removal activity. Remove moveable objects from the work area, and cover fixed objects with impermeable dropcloths or plastic sheeting with edges securely sealed with tape.
3. All floor and wall areas adjacent to the work area shall have a layer of 6 mil fire retardant polyethylene sheeting, attached to the interior wall and on floor surfaces below the abatement work area, at least 5 feet wide.
4. Close all windows during interior and exterior removal projects.
5. Regardless of method of removal, if dust is noted during removal activities, stop removal and adjust work practices or engineering controls. If dust generation continues, a full enclosure is required. See Section 3.3 "PCB Removal by Mechanical Methods."

B. PCB BPW Removal Operations: Comply with the following requirements for removal operations:

1. Remove PCB BPW using misting methods to assist in dust settling.
2. Material should be removed in intact sections if possible.
3. Adjust mechanical ventilation and or work practices accordingly to eliminate visible dust levels.
4. Place PCB BPW in labeled 6-mil polyethylene bags.
5. Place all bagged PCB BPW in owner provided drums or dumpsters.

C. Post-Removal Operation Requirements: After completion of PCB BPW removal and clean-up operations, comply with the following requirements:

1. HEPA vacuum and wet wipe/mop all areas until area is dust free.
2. The Contractor representative, in presence of Owner or Owner's Representative shall inspect the entire work area for PCB BPW dust or material.
3. If any suspect material is found, repeat final cleaning operation, until the visual inspection is satisfactory to the Owner.

D. Employee Decontamination Requirements:

1. Employees shall immediately wash hands, face and other potentially exposed surfaces of the body with soap and water each time they leave the regulated area.

2. Change out of work clothes and shower if necessary to prevent bringing PCB contamination home.

ALWAYS RETAIN FULL ARTICLE BELOW

3.3 PCB BPW REMOVAL BY MECHANICAL METHODS

A. Preparation of the Work Area: Complete the following preparation work prior to beginning removal operations using mechanical means (any method other than hand tools).

1. Mechanical cutting or grinding of PCB materials is not permitted, unless the equipment has a HEPA filtered exhaust.
2. Install critical barriers over each opening into the regulated area. The following requirements are in addition to, not in lieu of, other indicated surface and object protection requirements:
   a. Seal each opening between the work area and adjacent areas with 1 layer of 4-mil polyethylene sheeting. Openings include, but are not necessarily limited to, windows, skylights, doorways, elevator hoistway openings, corridor entrances, drains, ducts, grills, grates, and diffusers.
   b. Seal intake and exhaust vents and duct seams within the regulated area with 1 layer of 6-mil polyethylene sheeting.
3. HVAC System Shutdown: Owner's maintenance personnel will shut down heating, cooling, and air conditioning systems when necessary. Coordinate scheduling with Owner's personnel and provide 72 hours notice to the Owner's Representative prior to planned shut-down.
4. Close all windows during interior and exterior removal projects.
5. Protection of Surfaces and Objects: The following requirements are in addition to, not in lieu of, indicated work area sealing requirements. Cover the following surfaces and objects as follows:
   a. Protect all surfaces near removal activity. Remove moveable objects from the work area, and cover fixed objects with impermeable dropcloths or plastic sheeting with edges securely sealed with tape.
   b. Completely cover walls and floors within the regulated area with a layer of 6-mil polyethylene sheeting. Avoid seams where possible. If seams are necessary, overlap not less than 12 inches and tape joints. Immediately repair punctures and leaks, and clean up seepage.
   c. Cleaning: Do not use cleaning methods that raise dust, such as sweeping or using vacuum cleaners not equipped with HEPA filters.
   d. Fully seal floor drains.
6. Local Exhaust Ventilation: Maintain portable air filtration units in use during PCB BPW removal at interior locations.
   a. Exhaust directly to building exterior.
   b. Provide not less than 4 air changes per hour within the enclosure.

c. Within the enclosure, through the period of its use, maintain a pressure differential of not less than minus 0.02" water gage with respect to ambient conditions outside the enclosure.

7. Visually inspect the enclosure for breeches and smoke-test for leaks before work begins, and before the start of each work shift. Make all modifications to the enclosure prior to starting removal work.

B. PCB BPW Removal Operations: Comply with the following requirements for removal operations:

1. Remove PCB BPW using misting methods to assist in dust settling.
2. Material should be removed in intact sections if possible.
3. Adjust mechanical ventilation and or work practices accordingly to minimize visible dust levels.
4. Place PCB BPW in labeled 6-mil polyethylene bags.
5. Place all bagged PCB BPW in owner provided drums or dumpsters.

C. Post-Removal Operation Requirements: After completion of PCB BPW removal and clean-up operations, comply with the following requirements:

1. HEPA vacuum and wet wipe/mop all areas until area is dust free.
2. The Contractor representative, in presence of Owner or Owner's Representative shall inspect the entire work area for PCB BPW dust or material.
3. If any suspect material is found, repeat final cleaning operation, until the visual inspection is satisfactory to the Owner.

D. Employee Decontamination Requirements: Comply with the following requirements:

1. Access the work area only through an approved decontamination system. Lock or block other entrances. Seal emergency exits (for use during a fire or accident) with polyethylene sheeting and tape.
2. Entrance To The Regulated Area: Employees shall enter the decontamination area through the clean room, remove and store clothing, and put on protective clothing and respiratory protection before passing through to the equipment room.
3. Exit From The Regulated Area: Employees shall exit the regulated area by removing gross contamination and debris from their protective clothing. The clothing shall be removed and disposed of in the equipment room into labeled impermeable bags or containers.
4. Employees shall wash hands, face and other potentially exposed surfaces of the body with soap and water each time they leave the containment.
5. Employees shall change out of work clothes and shower if necessary to prevent bringing PCB contamination home.

3.4 DISPOSAL OF WASTE

A. PCB BPW shall be disposed of as PCB waste following the requirements listed below:

1. Bag and place PCB BPW in Owner-provided drums or dumpsters. Contact EHS-HMM (734)763-4568 at least two weeks in advance to request containers.
2. All PCB waste must be less than 3 foot x 3 foot prior to bagging or wrapping for disposal.
3. Store waste containers or articles in a secure area.
4. Do not stage containers on lawns, dirt piles, gravel drive areas with mud or basement areas with no elevator access.
5. Ensure that soil, ground water, and drains or sewers within the storage area are protected from possible contamination. Keep containers secure and tightly closed at all times, except when adding waste.
6. Keep abatement waste segregated from other waste and from other Projects. Do not co-mingle waste.
7. Place appropriate labels on all containers. Provide all information required on the label; mark labels using indelible ink. The name of the "Waste Generator" is as follows:
   a. “Campus Area” 1655 Dean Road, Ann Arbor, Michigan 48109.
   b. Contact EHS at the start of the project (734-763-4568) for proper generator name and site address.
8. Mark the side of each container with the name and phone number of Owner’s Representative knowledgeable about the type of waste contained.
9. Do not remove waste from Project Site.

B. Disposal of PCB waste shall be done in coordination with EHS-Hazardous Materials Management (HMM).

1. Contact EHS-HMM at least one week in advance to request pick-up of the dumpster.
2. EHS will pickup and dispose of properly packaged and staged PCB waste at no cost to the contractor. Call the EHS-HMM Program at 734-763-4568 to schedule a pickup immediately after PCB waste has been staged.

END OF SECTION 028400

UNIVERSITY OF MICHIGAN
ARCHITECTURE, ENGINEERING AND CONSTRUCTION

ARCHITECTURE & ENGINEERING
326 East Hoover, Mail Stop B
Ann Arbor, MI 48109-1002
Phone: 734-764-3414
Fax: 734-936-3334

BuildingName
The Description of the Project
P00000000 0000

SPECIFICATION DIVISION 3

NUMBER SECTION DESCRIPTION

DIVISION 03 CONCRETE
SECTION 033053 - MISCELLANEOUS CAST-IN-PLACE CONCRETE

END OF CONTENTS TABLE

DIVISION 03 CONCRETE
SECTION 033053 - MISCELLANEOUS CAST-IN-PLACE CONCRETE

THIS SECTION HAS BEEN PRE-EDITED TO APPLY ONLY TO VERY SMALL PATCHING-TYPE PROJECTS ONLY. USE AIA MASTERSPEC SECTION 033000 "CAST-IN-PLACE CONCRETE" FOR MORE SUBSTANTIAL PROJECTS.

PART 1 - GENERAL

1.1 RELATED DOCUMENTS

A. Drawings and general provisions of the Contract, Standard General and Supplementary General Conditions, Division 01 Specification Sections, and other applicable Specification Sections, in particular the Related Sections listed below, apply to this Section.

B. Related Sections:

1. Section 079200 - Joint Sealants

1.2 SUMMARY

A. Section includes:

1. Cast-in-place concrete, including reinforcement, concrete materials, mixture design, placement procedures, and finishes.

1.3 ACTION SUBMITTALS

A. Product Data: For each type of product.

INCLUDE BELOW FOR LEED PROJECTS.

B. Sustainable Design Submittals:

1. Product Data for Credit MR 4: For products having recycled content, documentation indicating percentages by weight of postconsumer and preconsumer recycled content. Include statement indicating cost for each product having recycled content.

"PRODUCT CERTIFICATES FOR CREDIT MR 5" SUBPARAGRAPH BELOW APPLIES TO LEED-NC, LEED-CS, AND LEED FOR SCHOOLS.

RETAIN "DESIGN MIXTURES FOR CREDIT ID 1.1" SUBPARAGRAPH BELOW IF FLY ASH, SLAG CEMENT, SILICA FUME, OR OTHER MATERIALS ARE USED AS PORTLAND CEMENT REPLACEMENTS FOR LEED CREDIT ID 1.1. TO ACHIEVE THIS CREDIT, REPLACEMENT MATERIALS MUST BE SUBSTITUTED FOR AT LEAST 40 PERCENT OF THE PORTLAND CEMENT THAT WOULD OTHERWISE BE USED.

2. Design Mixtures for Credit ID 1.1: For each concrete mixture containing fly ash as a replacement for portland cement or other portland cement replacements. For each design mixture submitted, include an equivalent concrete mixture that does not contain portland cement replacements, to determine amount of portland cement replaced.

C. Design Mixtures: For each concrete mixture.

1. Submit written report to Architect for each proposed concrete mix at least 15 days prior to start of work. Do not begin concrete production until mixes have been reviewed and are acceptable to Architect.

D. Laboratory Reports: Submit two (2) copies of laboratory test or evaluation reports for concrete materials and mix designs.

1.4 QUALITY ASSURANCE

A. Ready-Mix-Concrete Manufacturer Qualifications: A firm experienced in manufacturing ready-mixed concrete products and that complies with ASTM C 94 requirements for production facilities and equipment.

PART 2 - PRODUCTS

2.1 FORMWORK

A. Form Materials: Plywood, lumber, metal, or another approved material. Provide lumber dressed on at least two edges and one side for tight fit.

1. Wood or metal forms, sufficient to withstand pressure of placed concrete without bow or deflection.

RETAIN BELOW IF DESIRED.

B. Chamfer Strips: Wood, metal, PVC, or rubber strips, 3/4 by 3/4 inch, minimum, unless otherwise indicated on Drawings.

C. Form Ties: Factory-fabricated, removable or snap-off metal or glass-fiber-reinforced plastic form ties designed to resist lateral pressure of fresh concrete on forms and to prevent spalling of concrete on removal.

2.2 CONCRETE, GENERAL

A. Comply with the following sections of ACI 301 unless modified by requirements in the Contract Documents:

1. "General Requirements."
2. "Formwork and Formwork Accessories."
3. "Reinforcement and Reinforcement Supports."
4. "Concrete Mixtures."
5. "Handling, Placing, and Constructing."
6. "Lightweight Concrete."

B. Comply with ACI 117.

2.3 STEEL REINFORCEMENT

A. Recycled Content of Steel Products: Postconsumer recycled content plus one-half of preconsumer recycled content not less than 25 percent.

B. Reinforcing Bars: ASTM A 615, Grade 60, deformed.

C. Joint Dowel Bars: ASTM A 615, Grade 60, plain-steel bars, cut bars true to length with ends square and free of burrs.

D. Plain-Steel Wire: ASTM A 1064, as drawn.

E. Plain-Steel Welded-Wire Reinforcement: ASTM A 1064, plain, fabricated from as-drawn steel wire into flat sheets.

2.4 CONCRETE MATERIALS

A. Source Limitations: Obtain each type or class of cementitious material of the same brand from the same manufacturer's plant, obtain aggregate from single source, and obtain admixtures from single source from single manufacturer.

B. Cementitious Materials:

TYPE I LISTED BELOW (TYPICAL PORTLAND CEMENT), TYPICAL. CONSIDER TYPE III (HIGH EARLY STRENGTH) FOR SELECT APPLICATIONS (COLD WEATHER CONDITIONS AND EARLY LOADING REQUIREMENTS, DOES NOT HELP WITH CURE TIME FOR FLOORING INSTALLATION)

1. Portland Cement: ASTM C 150, Type I, unless otherwise indicated.
2. Fly Ash: ASTM C 618, Class C or F.

C. Normal-Weight Aggregate: ASTM C 33, selected and uniformly graded and as follows:

1. Class: Severe weathering region, but not less than 3S for foundations and walls and not less than 4S for flatwork.
2. Nominal Aggregate Size: In accordance with ACI 318.

D. Air-Entraining Admixture: ASTM C 260.

E. Chemical Admixtures: Certified by manufacturer to be compatible with other admixtures and that do not contribute water-soluble chloride ions exceeding those permitted in hardened concrete. Do not use calcium chloride or admixtures containing calcium chloride.

1. Water-Reducing Admixture: ASTM C 494, Type A.
2. Retarding Admixture: ASTM C 494, Type B.
3. Water-Reducing and Retarding Admixture: ASTM C 494, Type D.

F. Water: ASTM C 94; potable.

TYPICALLY INCLUDE FOR EXTERIOR WORK AND INTERIOR TRENCHING. FIBER HELPS TO REDUCE SHRINKING AND CRACKING.

G. Synthetic Fiber: Monofilament non-metallic polypropylene fibers engineered and designed for use in concrete, complying with ASTM C 1116/C 1116M, Type III, 1/2 to 1-1/2 inches long.

H. Prepackaged Concrete Mix for Project Site Mixing: Preblended mixture of Portland cement and aggregates requiring only the addition of water with 28 day compressive strength of 4000 psi.

1. Products:
   a. Quikrete Concrete Mix No. 1101; Quikrete Companies.
   b. Sakrete Concrete Mix; King Packaged Materials Company.

2.5 RELATED MATERIALS

EDIT LIST TO BE PROJECT SPECIFIC

A. Vapor Retarder: Plastic sheet, ASTM E 1745, Class A, polyethylene, minimum 15 mils thick. Include manufacturer's recommended pressure-sensitive tape.

B. Joint-Filler Strips: ASTM D 1751, asphalt-saturated cellulosic fiber, or ASTM D 1752, cork or self-expanding cork.

C. Self-Expanding Bentonite Strip Waterstops: Manufactured rectangular or trapezoidal strip, butyl rubber with sodium bentonite, for adhesive bonding to concrete, 3/4 by 1 inch.

1. Products:
   a. Carlisle Coatings & Waterproofing, Inc.; MiraSTOP.
   b. Colloid Environmental Technologies Company; Volclay Waterstop-RX.
   c. Greenstreak; Swellstop.

D. Bonding Agent: ASTM C 1059, Type I, acrylic emulsion.

1. Product: Polyweld; Chem-Masters, or equivalent.

E. Epoxy Bonding Adhesive: ASTM C 881, two-component epoxy resin, capable of humid curing and bonding to damp surfaces:

SELECT TYPES FROM TWO OPTIONS IN SUBPARAGRAPH BELOW BASED ON SERVICE LOADINGS.

1. Types IV and V, for bonding hardened or freshly mixed concrete to hardened concrete.
2. Product: EUCO 352 or 452; Euclid Chemical Company, or equivalent.

2.6 CURING MATERIALS

A. Water: Potable.

BELOW IS CURING ONLY.

B. Clear, Waterborne, Membrane-Forming Curing Compound: ASTM C 309, Type 1, Class B, dissipating.

1. VOC Content: 200 g/L or less.
2. Products:
   a. Dayton Superior Corporation; Clear Cure WB (J7WB).
   b. Euclid Chemical Company (The); Tammscure WB 30.
   c. Meadows, W. R., Inc.; 1100 Clear.

BELOW IS CURING AND SEALING COMPOUND. CONSIDER SEALING EXPOSED CONCRETE TO PROVIDE A MORE DURABLE FINISH.

C. Clear, Waterborne, Membrane-Forming Curing and Sealing Compound: ASTM C 1315, Type 1, Class A.

1. VOC Content: 100 g/L or less.
2. Products:
   a. Dayton Superior Corporation; Clear & Seal EF 1315
   b. Euclid Chemical Company (The); Super Aqua Clear VOX.
   c. Meadows, W. R., Inc.; Vocomp-30.

2.7 CONCRETE MIXTURES

A. Comply with ACI 301.

B. Normal-Weight Concrete:

1. Minimum Compressive Strength: 3000 psi at 28 days.
2. Maximum W/C Ratio: 0.48.
3. Fly Ash: Maximum 25 percent by weight of cementitious material.
4. Slump Limit: 8 inches for concrete with verified slump of 2 to 4 inches before adding high-range water-reducing admixture, plus or minus 1 inch.
5. Air Content: Use air-entraining admixture in all concrete; maintain within range permitted by ACI 301.
   a. Do not allow air content of trowel-finished floor slabs to exceed 3 percent.
   b. Provide not less than 4 percent nor more than 8 percent entrained air for concrete exposed to freezing and thawing.
   c. Provide from 2 percent to 4 percent for all other concrete.

C. Synthetic Fiber: Uniformly disperse in concrete mix at manufacturer's recommended rate but not less than a rate of 1.5 lb/cu. yd.

2.8 CONCRETE MIXING

A. Ready-Mixed Concrete: Measure, batch, mix, and deliver concrete according to ASTM C 94, **[and ASTM C 1116/C 1116M (for fiber reinforced concrete)]** and furnish batch ticket information.

1. When material temperature is above 90 deg F, reduce mixing and delivery time to 60 minutes.
2. When material temperature exceeds 95 deg F, material is unsuitable for installation.

B. Project-Site Mixing: Use prepackaged concrete mix that requires only the addition of water at project site. Mix prepackaged concrete mix and water in appropriate drum-type batch machine mixer.

PART 3 - EXECUTION

3.1 INSPECTION

A. Notify Owner's Representative 48 hours before placing concrete. Do not place concrete before Architect has approved completed reinforcement installation.

3.2 FORMWORK INSTALLATION

A. Design, construct, erect, brace, and maintain formwork according to ACI 301.

INCLUDE BELOW IF DESIRED.

1. Provide chamfer strips in the corners of concrete forms to produce beveled corners on walls and columns which will be exposed to view in finished construction.

3.3 FORMWORK REMOVAL

A. Forms may be removed after cumulatively curing at not less than 50 deg F for 24 hours after placing concrete, if concrete is hard enough to not be damaged by form-removal operations and curing and protection operations are maintained. And as follows:

1. Do not remove formwork until cylinder break test indicates concrete has reached 2500 psi strength.

3.4 EMBEDDED ITEM INSTALLATION

A. Place and secure anchorage devices and other embedded items required for adjoining work that is attached to or supported by cast-in-place concrete. Use setting drawings, templates, diagrams, instructions, and directions furnished with items to be embedded.

3.5 VAPOR-RETARDER INSTALLATION

A. Install, protect, and repair vapor retarders according to ASTM E 1643; place sheets in position with longest dimension parallel with direction of pour.

1. Lap joints 6 inches and seal with manufacturer's recommended adhesive or joint tape.

3.6 STEEL REINFORCEMENT INSTALLATION

A. Comply with CRSI's "Manual of Standard Practice" for fabricating, placing, and supporting reinforcement.

1. Do not cut or puncture vapor retarder. Repair damage and reseal vapor retarder before placing concrete.

3.7 JOINTS

A. General: Construct joints true to line with faces perpendicular to surface plane of concrete.

B. Construction Joints: Install so strength and appearance of concrete are not impaired, at locations indicated or as approved by Architect.

C. Contraction Joints in Slabs-on-Grade: Form weakened-plane contraction joints, sectioning concrete into areas as indicated. Construct contraction joints for a depth equal to at least one-fourth of concrete thickness, as follows:

1. Grooved Joints: Form contraction joints after initial floating by grooving and finishing each edge of joint to a radius of 1/8 inch. Repeat grooving of contraction joints after applying surface finishes. Eliminate groover marks on concrete surfaces.

2. Sawed Joints: Form contraction joints with power saws equipped with shatterproof abrasive or diamond-rimmed blades. Cut 1/8-inch-wide joints into concrete when cutting action does not tear, abrade, or otherwise damage surface and before concrete develops random contraction cracks.

D. Isolation Joints in Slabs-on-Grade: After removing formwork, install joint-filler strips at slab junctions with vertical surfaces, such as column pedestals, foundation walls, grade beams, and other locations, as indicated.

1. Extend joint-filler strips full width and depth of joint, terminating flush with finished concrete surface unless otherwise indicated.

3.8 CONCRETE PLACEMENT

A. Comply with ACI 301 for placing concrete.

B. Do not add water to concrete during delivery, at Project site, or during placement.

C. Consolidate concrete with mechanical vibrating equipment according to ACI 301.

INCLUDE BELOW IF BONDING AGENT REQUIRED

D. Application of Bonding Agent: Clean existing surfaces free of dirt, oil, grease and cleaning agents. Apply bonding agent in accordance with manufacturer's directions. Do not allow bonding agent to puddle in low spots. Place new concrete within time limits recommended by bonding agent manufacturer.

3.9 FINISHING FORMED SURFACES

A. Rough-Formed Finish: As-cast concrete texture imparted by form-facing material with tie holes and defects repaired and patched. Remove fins and other projections exceeding 1/2 inch.

1. Apply to concrete surfaces not exposed to public view.

B. Smooth-Formed Finish: As-cast concrete texture imparted by form-facing material, arranged in an orderly and symmetrical manner with a minimum of seams. Repair and patch tie holes and defective areas. Remove fins and other projections exceeding 1/8 inch.

1. Apply to concrete surfaces exposed to public view.

C. Related Unformed Surfaces: At tops of walls, horizontal offsets, and similar unformed surfaces adjacent to formed surfaces, strike off smooth and finish with a texture matching adjacent formed surfaces. Continue final surface treatment of formed surfaces uniformly across adjacent unformed surfaces unless otherwise indicated.

3.10 FINISHING UNFORMED SURFACES

A. General: Comply with ACI 302.1R for screeding, restraightening, and finishing operations for concrete surfaces. Do not wet concrete surfaces.

B. Screed surfaces with a straightedge and strike off. Begin initial floating using bull floats or darbies to form a uniform and open-textured surface plane before excess moisture or bleedwater appears on surface.

1. Do not further disturb surfaces before starting finishing operations.

C. Float Finish: Apply float finish to surfaces indicated, to surfaces to receive trowel finish, and to floor and slab surfaces to be covered with fluid-applied or sheet waterproofing, fluid-applied or direct-to-deck-applied membrane roofing, or sand-bed terrazzo.

D. Trowel Finish: Apply a hard trowel finish to surfaces indicated and to floor and slab surfaces exposed to view or to be covered with resilient flooring, carpet, ceramic or quarry tile set over a cleavage membrane, paint, or another thin film-finish coating system.

E. Floor Slab Flatness: Finish surfaces to the following tolerances, according to ASTM E 1155, for a randomly trafficked floor surface:

SELECT ONE OF THE FOLLOWING TWO PARAGRAPHS.

1. Specified overall values of flatness, F(F) 35; and of levelness, F(L) 25; with minimum local values of flatness, F(F) 24; and of levelness, F(L) 17; for slabs-on-grade.

CRITERIA ABOVE APPLY TO FLOORS TO RECEIVE THINSET TILE OR RESILIENT FLOORING. CRITERIA BELOW APPLY TO CARPETED FLOORS. USUALLY SELECT ABOVE AND DELETE BELOW. SEE MASTERSPEC EVALUATION SHEETS FOR ADDITIONAL EXPLANATION. NOTE THAT EVEN USING THE ABOVE CRITERIA THERE MAY STILL BE A NEED FOR FLOOR LEVELING FOR THINSET OR RESILIENT TILE DUE TO CONCRETE CURLING AND RIGID ACCEPTANCE CRITERIA BY FLOORING CONTRACTORS. CONSIDER INCLUDING AN ALLOWANCE IN DIV. 03 OR 09 SECTIONS FOR FLOOR PREPARATION.

2. Flatness and Levelness Criteria: overall values F(F) 25, and minimum levels of flatness F(F) 17 flatness tolerance; overall values of levelness F(L) 20, and minimum values of levelness F(L) 15 levelness tolerance, when tested in accordance with ASTM E 1155.

3.11 CONCRETE PROTECTING AND CURING

A. General: Protect freshly placed concrete from premature drying and excessive cold or hot temperatures. Comply with ACI 308, ACI 306.1 for cold-weather protection and with ACI 305 for hot-weather protection during curing.

B. Begin curing after finishing concrete but not before free water has disappeared from concrete surface.

C. Curing Methods: Cure formed and unformed concrete for at least seven days by one or a combination of the following methods:

1. Moisture-Retaining-Cover Curing: Cover concrete surfaces with moisture-retaining cover for curing concrete, placed in widest practicable width, with sides and ends lapped at least 12 inches, and sealed by waterproof tape or adhesive. Cure for not less than seven days. Immediately repair any holes or tears during curing period, using cover material and waterproof tape.
2. Curing Compound: Apply uniformly in continuous operation by power spray or roller according to manufacturer's written instructions. Recoat areas subjected to heavy rainfall within three hours after initial application. Maintain continuity of coating and repair damage during curing period.
3. Curing and Sealing Compound: Apply uniformly to floors and slabs indicated in a continuous operation by power spray or roller according to manufacturer's written instructions. Recoat areas subjected to heavy rainfall within three hours after initial application. Repeat process 24 hours later and apply a second coat. Maintain continuity of coating and repair damage during curing period.

3.12 CONCRETE SURFACE REPAIRS

A. Defective Concrete: Repair and patch defective areas when approved by Architect. Remove and replace concrete that cannot be repaired and patched to Architect's approval.

B. Patching Mortar: Mix dry-pack patching mortar, consisting of one part portland cement to two and one-half parts fine aggregate passing a No. 16 sieve, using only enough water for handling and placing.

C. Immediately after form removal, cut out honeycombs, rock pockets, and voids more than 1/2 inch in any dimension in solid concrete, but not less than 1 inch in depth. Make edges of cuts perpendicular to concrete surface. Clean, dampen with water, and brush-coat holes and voids with bonding agent. Fill and compact with patching mortar before bonding agent has dried. Fill form-tie voids with patching mortar or cone plugs secured in place with bonding agent.

D. Repair defects on surfaces exposed to view by blending white portland cement and standard portland cement so that, when dry, patching mortar will match surrounding color. Patch a test area at inconspicuous locations to verify mixture and color match before proceeding with patching. Compact mortar in place and strike off slightly higher than surrounding surface.

E. Repair defects on concealed formed surfaces that affect concrete's durability and structural performance as determined by Architect.

3.13 FIELD QUALITY CONTROL

A. Testing Agency: Owner will engage a qualified testing agency to perform tests and inspections.

B. Tests: Perform according to ACI 301.

1. Testing Frequency: Obtain at least one composite sample for each 100 cu. yd. or fraction thereof of each concrete mixture placed each day.

3.14 CONCRETE WASHOUT

A. Perform washout using proper disposal and washout practices. Perform washing of concrete trucks in designated areas or off site. Do not discharge concrete washout into storm drains, catch basins or to the sanitary sewer system.

END OF SECTION 033053

UNIVERSITY OF MICHIGAN
ARCHITECTURE, ENGINEERING AND CONSTRUCTION

ARCHITECTURE & ENGINEERING
326 East Hoover, Mail Stop B
Ann Arbor, MI 48109-1002
Phone: 734-764-3414
Fax: 734-936-3334

BuildingName
The Description of the Project
P00000000 0000

SPECIFICATION DIVISION 3

NUMBER SECTION DESCRIPTION

DIVISION 03 CONCRETE
SECTION 035416 - HYDRAULIC CEMENT UNDERLAYMENT

END OF CONTENTS TABLE

DIVISION 03 CONCRETE
SECTION 035416 - HYDRAULIC CEMENT UNDERLAYMENT

PART 1 - GENERAL

1.1 RELATED DOCUMENTS

A. Drawings and general provisions of the Contract, Standard General and Supplementary General Conditions, Division 01 Specification Sections, and other applicable Specification Sections apply to this Section.

1.2 SUMMARY

A. Section includes the following underlayments for application below interior floor coverings:

1. Poured, self-leveling underlayment.
2. Trowel-on underlayment for sloped applications.

B. Where uneven floor levels or holes occur, fill, patch, and provide underlayment as required to level surface to indicated standard prior to installation of finished floor material.

REQUIREMENT BELOW IS INTENDED TO LIMIT CLAIMS FOR EXTRAS.

1. Required for the following percentage of the gross floor area of the Project:

MODIFY PERCENTAGES BELOW BASED ON YOUR JUDGMENT.

a. Approximately 20 percent.
b. Approximately 50 percent.
c. Approximately 75 percent.
d. Full area.

1.3 ACTION SUBMITTALS

A. Product Data: For each type of product indicated.

INCLUDE BELOW FOR LEED PROJECTS

B. LEED Submittals:

"PRODUCT DATA FOR CREDIT IEQ 4.2" SUBPARAGRAPH BELOW APPLIES TO LEED-NC, LEED-CI, AND LEED-CS; COORDINATE WITH REQUIREMENTS SELECTED IN PART 2 FOR PAINTS AND COATINGS.

1. Product Data for Credit IEQ 4.2: For priming and sealing coatings, documentation including printed statement of VOC content.

1.4 INFORMATIONAL SUBMITTALS

A. Product Certificates: Signed by manufacturers of underlayment and floor-covering systems certifying that products are compatible.

1.5 QUALITY ASSURANCE

A. Product Compatibility: Manufacturers of underlayment and floor-covering systems certify in writing that products are compatible.

1.6 DELIVERY, STORAGE, AND HANDLING

A. Store materials to comply with manufacturer's written instructions to prevent deterioration from moisture or other detrimental effects.

1.7 PROJECT CONDITIONS

A. Environmental Limitations: Comply with manufacturer's written instructions for substrate temperature, ventilation, ambient temperature and humidity, and other conditions affecting underlayment performance.

1. Place hydraulic-cement-based underlayments only when ambient temperature and temperature of substrates are between 50 and 80 deg F.

1.8 COORDINATION

A. Coordinate application of underlayment with requirements of floor-covering products and adhesives, to ensure compatibility of products.

PART 2 - PRODUCTS

2.1 SELF-LEVELING UNDERLAYMENTS

A. Underlayment: Hydraulic-cement-based, polymer-modified, self-leveling product that can be applied at a minimum thickness of 1/4 inch up to 1-1/2 inch over large areas neat, and up to 4 inches with the addition of proper aggregate and can be featheredged to match existing floor elevations.

1. Products: Subject to compliance with requirements, provide one of the following:
   a. Ardex Engineered Cements; Ardex K-15.
   b. Dayton Superior; LeveLayer.
   c. Euclid Chemical Company; Super Flo-Top.
   d. Maxxon Corporation; Level-Right.
2. Cement Binder: ASTM C 150, portland cement, or hydraulic or blended hydraulic cement as defined by ASTM C 219.
3. Compressive Strength: Not less than 4000 psi at 28 days when tested according to ASTM C 109.

B. Primer: Product of underlayment manufacturer recommended in writing for substrate, conditions, and application indicated.

1. Products: Subject to compliance with requirements, provide one of the following:
   a. Ardex Engineered Cements; Ardex P 51 Primer, Ardex P 82 Ultra Prime.
   b. Dayton Superior; J42, J42RTU.

c. Euclid Chemical Company; Tammsweld.
d. Maxxon Corporation; Maxxon Floor Primer.

2. Primer shall have a VOC content of 200 g/L or less when calculated according to 40 CFR 59, Subpart D.

2.2 SLOPED-FLOOR TROWELABLE UNDERLAYMENTS

A. Sloped-Floor Underlayment: Trowelable, cement-based, polymer-modified, repair mortar that can be applied in minimum uniform thickness of 1/2 inch.

1. Products: Subject to compliance with requirements, provide one of the following:
   a. Ardex Engineered Cements; Ardex TRM.
   b. Dayton Superior; Polyfast FS.
   c. Euclid Chemical Company; Concrete-Top Supreme.
2. Cement Binder: ASTM C 150, portland cement, or hydraulic or blended hydraulic cement as defined by ASTM C 219.
3. Compressive Strength: Not less than 9000 psi at 28 days when tested according to ASTM C 109.

B. Primer: Product of sloped-floor underlayment manufacturer recommended in writing for substrate, conditions, and application indicated.

1. Products: Subject to compliance with requirements, provide one of the following:
   a. Ardex Engineered Cements; Ardex BACA, Ardex P 71.
   b. Euclid Chemical Company; Duralprep AC.
   c. Saturated Surface Dry (SSD) existing concrete surface with a scrub coat of sloped-floor underlayment.
2. Primer shall have a VOC content of 200 g/L or less when calculated according to 40 CFR 59, Subpart D.

2.3 MISCELLANEOUS MATERIALS

A. Aggregate: Well-graded, washed gravel, 1/8 to 1/4 inch; or coarse sand as recommended by underlayment manufacturer.

1. Provide aggregate when recommended in writing by underlayment manufacturer for underlayment thickness required.

B. Water: Potable and at a temperature of not more than 70 deg F.

PART 3 - EXECUTION

3.1 EXAMINATION

A. Examine substrates, with Installer present, for conditions affecting performance.

1. Proceed with application only after unsatisfactory conditions have been corrected.

3.2 PREPARATION

A. General: Prepare and clean substrate according to manufacturer's written instructions.

1. Treat nonmoving substrate cracks according to manufacturer's written instructions to prevent cracks from telegraphing (reflecting) through underlayment.
2. Fill substrate voids to prevent self-leveling underlayment from leaking.

DELETE SUBSTRATE MATERIALS THAT DO NOT APPLY TO PROJECT.

B. Concrete Substrates: Mechanically remove, according to manufacturer's written instructions, laitance, glaze, efflorescence, curing compounds, form-release agents, dust, dirt, grease, oil, and other contaminants that might impair underlayment bond.

INCLUDE BELOW FOR NEW SLABS.

1. Moisture Testing: Perform anhydrous calcium chloride test, ASTM F 1869. Proceed with installation only after substrates do not exceed a maximum moisture-vapor-emission rate of 3 lb of water/1000 sq. ft. in 24 hours.

C. Wood Substrates: Mechanically fasten loose boards and panels to eliminate substrate movement and squeaks. Sand to remove coatings that might impair underlayment bond and remove sanding dust.

1. Install underlayment reinforcement recommended in writing by manufacturer.

D. Metal Substrates: Mechanically remove, according to manufacturer's written instructions, rust, foreign matter, and other contaminants that might impair underlayment bond. Apply corrosion-resistant coating compatible with underlayment if recommended in writing by underlayment manufacturer.

E. Nonporous Substrates: For ceramic tile, quarry tile, and terrazzo substrates, remove waxes, sealants, and other contaminants that might impair underlayment bond, and prepare surfaces according to manufacturer's written instructions.

F. Adhesion Tests: After substrate preparation, test substrate for adhesion with underlayment according to manufacturer's written instructions.

3.3 APPLICATION

A. General: Mix and apply underlayment components according to manufacturer's written instructions.

1. Close areas to traffic during underlayment application and for time period after application recommended in writing by manufacturer.
2. Coordinate application of components to provide optimum underlayment-to-substrate and intercoat adhesion.
3. At substrate expansion, isolation, and other moving joints, allow joint of same width to continue through underlayment.

B. Apply primer over prepared substrate at manufacturer's recommended spreading rate.

1. For Sloped-Floor Underlayments, provide either a Saturated Surface Dry (SSD) concrete face or primer as recommended in writing by the Sloped-Floor Underlayment Manufacturer.

C. Apply underlayment to produce uniform, level surface.

1. Apply a final layer without aggregate to product surface.
2. Feather edges to match adjacent floor elevations.

D. Cure underlayment according to manufacturer's written instructions. Prevent contamination during application and curing processes.

E. Do not install floor coverings over underlayment until after time period recommended in writing by underlayment manufacturer.

F. Remove and replace underlayment areas that evidence lack of bond with substrate, including areas that emit a "hollow" sound when tapped.

3.4 PROTECTION

A. Protect underlayment from concentrated and rolling loads for remainder of construction period.

3.5 CONCRETE WASHOUT

A. Perform washout using proper disposal and washout practices. Perform washing of concrete trucks in designated areas or off site. Do not discharge concrete washout into storm drains, catch basins or to the sanitary sewer system.

END OF SECTION 035416

UNIVERSITY OF MICHIGAN
ARCHITECTURE, ENGINEERING AND CONSTRUCTION

ARCHITECTURE & ENGINEERING
326 East Hoover, Mail Stop B
Ann Arbor, MI 48109-1002
Phone: 734-764-3414
Fax: 734-936-3334

BuildingName
The Description of the Project
P00000000 0000

SPECIFICATION DIVISION 4

NUMBER SECTION DESCRIPTION

DIVISION 04 MASONRY
SECTION 042000 - UNIT MASONRY

END OF CONTENTS TABLE

DIVISION 04 MASONRY
SECTION 042000 - UNIT MASONRY

THIS SECTION HAS BEEN PRE-EDITED TO APPLY ONLY TO VERY SMALL INTERIOR PROJECTS. USE AIA MASTERSPEC SECTION OF SAME NAME AND NUMBER FOR EXTERIOR OR LOADBEARING MASONRY CONSTRUCTION.

FOR MINOR PATCHING OF CMU, REFER TO SECTION 042010 "UNIT MASONRY ASSEMBLIES (LIMITED APPLICATIONS)".

PART 1 - GENERAL

1.1 SUMMARY

EDIT LIST BELOW TO SUIT PROJECT.

A. Types of masonry work include the following:

1. Face brick.
2. Structural Glazed Facing Tile.
3. Concrete masonry units.
4. Prefaced concrete masonry units.

INCLUDE THE FOLLOWING IF APPLICABLE.

B. Related Sections include the following:

1. Division 01 Section "Allowances" for face brick allowance.
2. Division 08 Section "Louvers and Vents" for through-wall louvers and vents.

1.2 SUBMITTALS

A. Product Data: Submit mfr's data indicating that each type of masonry unit and accessory complies with specified requirements.

INCLUDE PARAGRAPH BELOW IF FACE BRICK IS INCLUDED.

B. Brick Certification: Submit manufacturer's certification that face brick meets requirements of ASTM C 216, with exceptions indicated in "Quality Assurance" article of this Section.

C. Samples: Provide the following samples:

1. Face Brick: Submit 12-inch by 12-inch face brick sample cards including entire range of color for preliminary selection.
   a. Submit first set of face brick sample cards within two weeks from award of Contract.
   b. As many as three separate manufacturers/color ranges may be selected by the Architect to be built into mock-up panels.

DELETE ABOVE OR BELOW OR BOTH AS APPLICABLE.

2. Structural Glazed Facing Tile (SGFT): Submit sample card for Architect's preliminary color selection. Submit one full size sample each, of as many as four separate colors selected by Architect.

1.3 QUALITY ASSURANCE

A. Standards: Comply with recommendations of Brick Institute of America (BIA), National Concrete Masonry Association (NCMA) and with ACI 530/ASCE 5 and ACI 530.1/ASCE 6.

DELETE BELOW IF NO FACE BRICK.

B. Face brick Standard: ASTM C 216, except as follows:

1. Provide cored brick only; frogged brick is not acceptable.

INCLUDE BELOW FOR EXTERIOR PROJECTS.

C. Cold Weather and Hot Weather Construction: Comply with requirements specified in ACI unit masonry standard.

INCLUDE BELOW FOR PROJECTS WITH FACE BRICK.

D. Job Mock-up: Before ordering face brick, erect sample wall panel mock-up using materials, bond, mortar and joint tooling required for final work. Build mock-up panel at site, in location indicated by Owner, of approximately 4 feet by 4 feet, indicating proposed range of color and workmanship expected in completed work.

1. Obtain Architect's acceptance of visual qualities of the mock-up and during construction use mock-up as a standard for judging completed masonry work.
2. Do not alter, move or destroy mock-up until directed by Owner.
3. Provide one brick mock-up panel for each selected brick mfr/color range selected by Architect.

1.4 DELIVERY, STORAGE AND HANDLING

A. Store cementitious materials off the ground and under cover in a dry location.

B. Store masonry accessories to prevent corrosion and accumulation of dirt and oil.

DELETE BELOW IF NO FACE BRICK.

C. Brick Storage: Store brick on platforms or pallets above ground. Cover with canvas or similar weatherproof material to dirt and water away from brick.

PART 2 - PRODUCTS

2.1 FACE BRICK

A. Face Brick: ASTM C 216, Grade SW, Type FBX, cored except as follows:

1. In locations where top or bottom of brick units will be exposed weather or view in completed construction, provide noncored units.

USE AIA BASIC IN LIEU OF THESE IF BRICK DOES NOT NEED TO SIMPLY MATCH EXISTING.

2. Manufacturer/Style: Match existing face brick size, color, texture, and strength as closely as possible.

DELETE BELOW IF NO SGFT. BELOW IS ONE EXAMPLE. ADD OTHERS AS REQUIRED TO SUIT PROJECT.

2.2 STRUCTURAL GLAZED FACING TILE

A. Structural Glazed Facing Tile (SGFT): ASTM C 126; standard and special shapes; and as follows:

1. Size: 12-inch by 5-1/2-inch, to match existing; thickness as indicated.
2. Cores: Horizontal or vertical.
3. Facing: Type I (single side).
4. Base: Non-recessed, coved to match existing.
5. Color: Match existing as closely as possible.
6. Manufacturer/Style: Except where otherwise indicated, or where required to match existing adjacent conditions, provide bull-nose shapes at outside corners. Provide products of the following:
   a. Stark Ceramics Inc.; No. insert cat no. and select color.

DELETE BELOW IF NO CMU.

2.3 CONCRETE MASONRY UNITS

GRADE N-I BELOW IS ONLY UNIT LIKELY TO BE AVAILABLE LOCALLY.

A. Concrete Masonry Units (CMU): Grade N-I, "medium weight" units (min. 105 pcf). Provide units which have been cured not less than 28 days prior to delivery. In addition, comply with the following:

DELETE TYPES BELOW NOT RELEVANT TO PROJECT.

1. Hollow loadbearing CMU: ASTM C 90.
2. Size: Provide units that are 15-5/8 inches by 7-5/8 inches by width indicated on drawings, or if not indicated as follows:
   a. Width: 11-5/8 inches.
   b. Width: 9-5/8 inches.
   c. Width: 7-5/8 inches.
   d. Width: 5-5/8 inches.
   e. Width: 3-5/8 inches.

SELECT ONE OF THE 2 FOLLOWING.

3. Ends and Corner Units: Finished and bull nosed.
4. Ends and Corner Units: Finished and square cornered.
5. Block Lintels: Provide pre-cast masonry lintels reinforced with 4 bars, two top and two bottom sized as follows:

EDIT BELOW TO SUIT PROJECT.

   a. No. 4 bars for spans to 4 feet, 8 inches.
   b. No. 5 bars for spans to 6 feet.

c. No. 6 bars for spans to 7 feet, 4 inches.

DELETE BELOW IF NO PATTERNED UNITS.

6. Patterned Concrete Masonry Units: Provide units with the following pattern:
   a. Single-score units (nominal 8-inch by 8-inch pattern).
   b. Double-score units (nominal 5.33-inch by 8-inch pattern).

DELETE BELOW IF NO PREFACED CONCRETE BLOCK.

7. Prefaced Concrete Block: Lightweight concrete units indicated below with manufacturer's standard smooth resinous tile facing complying with ASTM C 744:

REVISE BELOW TO SUIT PROJECT.

   a. Color/Pattern No.: "Spectra-Glaze II", "Standard Colors" No. select color name and number; and as follows:
      1) Nonscored units.
      2) Single-score units (nominal 8-inch by 8-inch pattern).
      3) Double-score units (nominal 5.33-inch by 8-inch pattern).
   b. Products: Subject to compliance with requirements, provide one of the following:
      1) Spectra-Glaze II; Burns and Russell Co.
      2) Astra-Glaze; Trenwyth Industries.

DELETE BELOW IF NO SOUND-ABSORBING BLOCK UNITS - REFER TO CATALOG FOR ADDITIONAL OPTIONS/FEATURES.

8. Sound-Absorbing Concrete Masonry Units: Provide units with NRC range of 0.60 to 0.70, of indicated thickness, and capable of providing indicated fire-rated assembly.
   a. Products: Subject to compliance with requirements, provide "Type RR" (or other as required to achieve indicated fire rating); the Proudfoot Co.

2.4 STONE

A. Limestone: ASTM C 568, of the following classification and variety:

1. Oolitic limestone/Category II (medium density) quarried in Lawrence, Monroe, and Owens counties, IN, of the grade, color, and finish matching existing, adjacent units.

DELETE ABOVE AND SELECT BELOW WHEN NOT SPECIFYING UNITS TO MATCH EXISTING.

2. Oolitic limestone/Category II (medium density) quarried in Lawrence, Monroe, and Owens counties, IN, of the following grade, color, and finish matching standards established by the Indiana Limestone Institute (ILI):

REFER TO AIA MASTERSPEC FOR INSTRUCTIONS ON IDENTIFYING CHARACTERISTICS BELOW.

   a. Grade: insert.
   b. Color: insert.

c. Finish: insert.

2.5 MORTAR MIX

GENERALLY, TYPE N MORTAR BELOW IS SUITABLE FOR INTERIOR APPLICATIONS. USE TYPE S FOR EXTERIOR FACE BRICK APPLICATIONS. USE TYPE N OR SEALANT JOINTS WITH EXTERIOR LIMESTONE. REFER TO AIA MASTERSPEC OR OTHER REFERENCES FOR FULL SELECTION.

A. Mortar: Comply with ASTM C 270, Type N, and the following:

1. Masonry Cement: ASTM C 91, Type II; or, at Contractor's option, the following:
   a. Portland Cement: ASTM C 150 or ASTM C 175 (air-entraining).
   b. Hydrated lime: ASTM C 207, Type S.
2. Sand: ASTM C 144.

INCLUDE BELOW ONLY WITH LIMESTONE.

   a. For white pointing mortar, use selected natural white sand or ground white stone sand.
3. Water: Clean and potable.

B. The use of calcium chloride or admixtures containing calcium chloride in mortar is not permitted.

2.6 ACCESSORIES

A. Horizontal Joint Reinforcing: Provide galvanized reinforcing, with coating thickness as required by specified masonry standard for application indicated, and as follows:

1. Interior Walls and Partitions: Ladder or truss type; 9 gage side rods and cross rods.
2. Exterior Face Brick with Block Back-Up: Ladder design (truss not permitted); 9 gage side and cross rods. Fabricate units in 10 foot lengths, with one side rod for each face shell of hollow concrete masonry units more than 4-inches in width, and one side rod for face brick wythe ("tri-rod").

DELETE BELOW IF NO CORRUGATED TIES.

B. Corrugated Wall Ties: 0.8 oz. hot-dipped galvanized in lengths shown on drawings. Equal to Dur-O-Wall "D/A CWT" ties.

DELETE BELOW IF NO LIMESTONE.

C. Limestone Accessories: Comply with the following:

1. Where in direct contact with stone, provide ASTM A 666, AISI Type 304 stainless steel anchors and attachments, of temper required to support loads imposed by limestone elements.
2. Setting Buttons: Plastic or lead.
3. Dampproofing: Cementitious or bituminous formulations recommended by ILI, non-staining to stone, compatible with joint sealants, and noncorrosive to anchors and attachments.

DELETE BOTH BELOW IF MORTAR JOINTS ARE SPECIFIED.

4. Sealant for Vertical Joints: One-part low modulus nonacid curing silicone sealant, as specified in Division 07 Section "Joint Sealants".
5. Sealant for Filling Kerfs: One-part high modulus nonacid curing silicone sealant.

DELETE BELOW IF NO WEEP HOLES REQUIRED.

D. Weeps: Form by omission of head joints. Cotton wicks and plastic tubes are not permitted.

2.7 FLASHING

A. Rubberized Asphalt Sheet Flashing: Manufacturer's standard composite flashing product consisting of 32-mil-thick pliable and highly adhesive rubberized asphalt compound bonded completely and integrally to 8-mil-thick, high-density, cross-laminated polyethylene film to produce an overall thickness of 40 mils.

B. Adhesive for Flashings: Of type recommended by manufacturer of flashing material for use indicated.

C. Products: Subject to compliance with requirements, provide one of the following:

1. Rubberized Asphalt Sheet Flashing:
"Perm-A-Barrier Wall Flashing," W.R. Grace & Co.

2.8 INSULATION

A. Extruded Polystyrene Board Insulation: Rigid cellular polystyrene thermal insulation with closed cells and integral high-density skin, formed by the expansion of polystyrene base resin in an extrusion process to comply with ASTM C 578, Type IV; in manufacturer's standard lengths and widths; and as follows:

1. Thickness: 2-inches.

2.9 MASONRY CLEANERS

A. Job-Mixed Detergent Solution: Trisodium phosphate (1/2 cup dry measure) and laundry detergent (1/2 cup dry measure) dissolved in one gallon of water. Muriatic acid cleaners are not acceptable.

DELETE BELOW IF NO LIMESTONE.

2.10 LIMESTONE FABRICATION

A. Comply with recommendations of ILI for tolerances, holes and sinkages for anchors, fasteners, lifting devices and supports. Provide chases, reveals, reglets, and openings for continuous work. Control depth of stones and back check to maintain minimum clearances between backs of stones and backup walls or other work behind stones.

PART 3 - EXECUTION

3.1 INSTALLATION

A. Layout walls in advance for accurate spacing of surface bond patterns and with uniform joint widths and to accurately locate openings, movement-type joints, returns and offsets. Avoid use of less-than-half-size units at corners, jambs and wherever possible at other locations.

B. Lay up walls to comply with specified construction tolerances, with courses accurately spaced and coordinated with other work.

C. Install (lay) masonry units as indicated:

SELECT 1 BOND PATTERN BELOW.

1. Pattern: Bond pattern matching existing units.
2. Pattern: Common running bond.
3. Pattern: Stack bond.

SELECT 1 COURSING PATTERN BELOW.

4. Coursing: Match existing adjacent units.
5. Coursing: As shown on drawings.

D. Cut exposed masonry units, where necessary, with a power saw.

E. Bond intersecting walls with masonry units or provide anchors spaced 24 inches on center.

DELETE BELOW IF NO SUCH CONDITION.

1. Where new masonry walls abut existing masonry construction, tooth into existing masonry and provide cross-bonding, or anchor new masonry work to existing nonmasonry structure with corrugated ties at 16-inches on-center vertically.

F. Cavities: Strike mortar on cavity side of masonry work smooth. Keep cavity spaces between wythes free of mortar droppings and debris; use follower board if necessary.

G. Joints: Do not align vertical joints from course to course. Hold uniform joint sizes to suit modular size of masonry units. Cut joints flush and tool slightly concave.

H. Reinforcing: Install every second course and immediately above and below openings, for a distance of 2 feet beyond jambs of opening. Do not bridge control and expansion joints in the wall system.

1. Overlap adjacent ladder type reinforcing sections not less than 14 inches.
2. At corners, lap 9 gage round deformed galvanized wire with ladder type joint reinforcing not less than 14 inches.

I. Install concealed flashings where indicated and continuously at shelf angles, lintels and similar obstructions. Comply with Brick Institute of America recommendations for forming, anchoring, joining and adhering flashing.

J. Install weeps, located as indicated, or if not indicated, 24 inches o.c.

1. Form weep holes by keeping head joints free and clear of mortar.
2. Fill cavities and air spaces with clean, sharp mason's sand to a height equal to height of first course but not less than 2 inches immediately above flashing embedded in the wall, as masonry construction progresses.

K. Build other work into the masonry work as shown, fitting masonry units around other work, and grouting for secure anchorage.

L. Masonry Patching and Infill: Where infill of existing masonry openings is indicated, comply with the following:

1. Vertical Joints: Tooth into adjacent existing block walls; do not vertically align joints at interface of existing and new masonry work.
2. Horizontal Joints: Align coursing to match existing, adjacent units.

DELETE BELOW IF NO LIMESTONE. REMEMBER, THIS IS FOR VERY LIMITED STONE WORK (SUCH AS REPLACING A SILL). DO NOT USE FOR MORE EXTENSIVE WORK.

M. Install limestone in accordance with drawings, complete with anchors, supports, fasteners and other attachments to secure stonework in place. Set stones on setting buttons or shims to maintain uniform width of joints. Apply dampproofing to backs of limestone surfaces.

1. Sealant Joints: Set stone with sealant joints. Fill anchor holes with sealant.
2. Mortar Joints: Set stones in mortar. Fill anchor holes with mortar. Rake out joints and point with white mortar. Tool joints concave.

3.2 CLEANING

MOST ACIDIC CLEANERS, EVEN PROPRIETARY PRODUCTS LISTED AS "MILD", ARE ACTUALLY QUITE STRONG. THEY MAY CAUSE DAMAGE TO MASONRY AND ADJACENT SURFACES AND ARE DIFFICULT TO COLLECT AND DISPOSE OF PROPERLY.

GOOD MASONRY PRACTICE INCLUDES REMOVING MORTAR FROM EXPOSED MASONRY FACES BEFORE SETTING. IF THIS IS NOT DONE, USE OF ACIDIC CLEANERS MAY BE NECESSARY. REFER TO AIA MASTERSPEC SECTION 042000 FOR LISTING OF PROPRIETARY ACIDIC CLEANERS AND READ PRODUCT LITERATURE BEFORE SPECIFYING. INCLUDE IN SPECIFICATION A PROVISION FOR TESTING A SMALL AREA BEFORE GENERAL CLEANING. CONTACT OSEH FOR INFORMATION REGARDING PROPER DISPOSAL.

A. Clean excess mortar as work progresses.

B. Remove large mortar particles by hand using non-metallic scrapers or paddles.

C. Final cleaning: Clean masonry with stiff non-metallic brushes, clean water, and a mild non-acidic soap or detergent, if required. Do not use acids without prior written approval.

D. Dispose of wash water by methods described in Division 01 Section "Closeout Procedures."

END OF SECTION 042000

UNIVERSITY OF MICHIGAN
ARCHITECTURE, ENGINEERING AND CONSTRUCTION

ARCHITECTURE & ENGINEERING
326 East Hoover, Mail Stop B
Ann Arbor, MI 48109-1002
Phone: 734-764-3414
Fax: 734-936-3334

BuildingName
The Description of the Project
P00000000 0000

SPECIFICATION DIVISION 4

NUMBER SECTION DESCRIPTION

DIVISION 04 MASONRY
SECTION 042010 - UNIT MASONRY ASSEMBLIES (LIMITED APPLICATIONS)

END OF CONTENTS TABLE

DIVISION 04 MASONRY
SECTION 042010 - UNIT MASONRY ASSEMBLIES (LIMITED APPLICATIONS)

THIS SECTION HAS BEEN PRE-EDITED TO APPLY ONLY TO INTERIOR MASONRY WORK LIMITED TO MODIFYING EXISTING CMU ASSEMBLIES. USE MASTERSPEC SECTION 042000 "UNIT MASONRY ASSEMBLIES" OR AIA MASTERSPEC SECTION OF SAME NAME AND NUMBER FOR MORE SUBSTANTIAL PROJECTS.

12/1/2017 - ADDED IDENTIFICATION REQUIREMENTS.

PART 1 - GENERAL

1.1 SUMMARY

A. Extent of masonry work consists of modifying existing concrete masonry unit structures and is indicated on drawings and by provisions of this Section.

B. Section Includes:

1. Concrete masonry units (CMU's).
2. Steel reinforcement.

C. Related Sections Includes:

1. Division 05 Section “Metal Fabrications” for steel lintels.

1.2 SUBMITTALS

A. Product Data: For each type of product indicated.

B. Shop Drawings: For reinforcing steel. Detail bending and placement of unit masonry reinforcing bars. Comply with ACI 315, "Details and Detailing of Concrete Reinforcement."

1.3 QUALITY ASSURANCE

A. Masonry Standard: Comply with ACI 530.1/ASCE 6/TMS 602 unless modified by requirements in the Contract Documents.

1.4 DELIVERY, STORAGE, AND HANDLING

A. Store masonry units on elevated platforms in a dry location. If units are not stored in an enclosed location, cover tops and sides of stacks with waterproof sheeting, securely tied. If units become wet, do not install until they are dry.

B. Store cementitious materials on elevated platforms, under cover, and in a dry location. Do not use cementitious materials that have become damp.

1.5 PROJECT CONDITIONS

A. Stain Prevention: Prevent grout and mortar from staining the face of masonry. Immediately remove grout and mortar that come in contact with masonry.

1. Protect floor and base of walls from mortar splatter by spreading coverings on floor and over wall surface.
2. Protect sills, ledges, and projections from mortar droppings.
3. Protect floors and adjacent walls from mortar droppings.
4. Protect surfaces of window and door frames, as well as similar products with painted and integral finishes, from mortar droppings.

PART 2 - PRODUCTS

2.1 MASONRY UNITS, GENERAL

A. Defective Units: Referenced masonry unit standards may allow a certain percentage of units to contain chips, cracks, or other defects exceeding limits stated in the standard. Do not use units where such defects will be exposed in the completed Work.

B. Fire-Resistance Ratings: Where indicated, provide units that comply with requirements for fire-resistance ratings indicated as determined by testing according to ASTM E 119, by equivalent masonry thickness, or by other means, as acceptable to authorities having jurisdiction.

2.2 CONCRETE MASONRY UNITS

SECTION IS PRE-EDITED FOR NEW BLOCK IN AREAS WITH EXISTING BLOCK. IF NO EXISTING BLOCK, SECTION WILL REQUIRE ADDITIONAL INFORMATION.

A. Concrete Masonry Units: Provide new concrete masonry units, mortar, and accessories that match the existing installation in every respect, including size, texture and strength.

B. Concrete Masonry Units: ASTM C 90

1. Unit Compressive Strength: Provide units with minimum average net-area compressive strength of 1900 psi.
2. Density Classification: Medium weight.

INDICATE NOMINAL WIDTHS ON DRAWINGS.

3. Size: Nominal face dimension of 16 inches long x 8 inches high (15-5/8 inches x 7-5/8 inches actual) x 3/8 inch less than nominal widths indicated on Drawings.

C. Shapes: Provide shapes indicated and for lintels, corners, jambs, control joints and other special conditions.

2.3 MORTAR AND GROUT MATERIALS

BELOW ARE TYPICAL SELECTIONS FOR INTERIOR APPLICATIONS.

A. Portland Cement: ASTM C 150, Type I.

B. Hydrated Lime: ASTM C 207, Type S.

C. Portland Cement-Lime Mix: Packaged blend of portland cement and hydrated lime containing no other ingredients.

D. Masonry Cement: ASTM C 91.

E. Mortar Cement: ASTM C 1329.

F. Aggregate for Mortar: ASTM C 144.

G. Aggregate for Grout: ASTM C 404.

H. Water: Potable.

2.4 CONCRETE AND MASONRY LINTELS

A. General: Provide the following:

SELECT ONE OF THE FOLLOWING OR EDIT ABOVE TO STATE "ONE OF THE FOLLOWING" AND ALLOW CONTRACTOR TO SELECT.

FOR CONCRETE MASONRY UNIT WALLS WHERE LINTEL IS EXPOSED TO VIEW, USE PREFABRICATED OR BUILT-IN-PLACE BOND BEAM LINTELS.

FOR CONCRETE MASONRY UNIT WALLS WHERE LINTEL IS NOT EXPOSED TO VIEW.USE EITHER CONCRETE LINTELS OR BOND BEAM LINTELS

1. Concrete Lintels: ASTM C 1623, matching CMUs in color, texture, and density classification; and with reinforcing bars indicated. Provide lintels with net-area compressive strength not less than CMUs.
2. Masonry Lintels: Prefabricated or built-in-place masonry lintels made from bond beam CMUs with reinforcing bars placed as indicated and filled with coarse grout.

2.5 REINFORCEMENT

A. Masonry Joint Reinforcement, General: ASTM A 951.

INTERIOR WALLS EXPOSED TO A MEAN RELATIVE HUMIDITY LESS THAN OR EQUAL TO 75% USE MILL GALVANIZED.

INTERIOR WALLS EXPOSED TO A MEAN RELATIVE HUMIDITY GREATER THAN OR EQUAL TO 75% USE HOT-DIPPED GALVANIZED.

USE 0.187 INCH DIAMETER WIRE SIZE FOR 1/2 INCH THICK JOINTS

EDIT BELOW.

1. Interior Walls: [Mill-] [Hot-dip galvanized], carbon steel
2. Wire Size for Side Rods: [0.148-inch (9 gage)] [0.187-inch] diameter.
3. Wire Size for Cross Rods: [0.148-inch (9 gage)] [0.187-inch] diameter.
4. Spacing of Cross Rods, Tabs, and Cross Ties: Not more than 16 inches o.c.
5. Provide in lengths of not less than 10 feet, with prefabricated corner and tee units.

B. Masonry Joint Reinforcement for Single-Wythe Masonry: Either ladder or truss type with single pair of side rods.

2.6 MORTAR AND GROUT MIXES

A. Mortar for Unit Masonry: Comply with ASTM C 270, Proportion Specification. Provide the following types of mortar for applications stated unless another type is indicated.

1. For interior non-load-bearing partitions: Type N.
2. For interior load-bearing walls: Type S.

B. Grout for Unit Masonry: Comply with ASTM C 476.

1. Use grout of type (fine or coarse) that will comply with Table 1.15.1 in ACI 530.1/ASCE 6/TMS 602 for dimensions of grout spaces and pour height.

PART 3 - EXECUTION

3.1 INSTALLATION

A. Lay masonry units with bond pattern matching existing adjacent units, with face shells fully bedded in mortar and with head joints of depth equal to bed joints and as follows:

1. Vertical Joints: Tooth into adjacent existing block walls; do not vertically align joints at interface of existing and new masonry work.
2. Horizontal Joints: Align coursing to match existing, adjacent units.

B. Tool exposed joints slightly concave when thumbprint hard, using a jointer larger than joint thickness unless otherwise indicated.

C. Cut joints flush for masonry walls to receive plaster or other direct-applied finishes (other than paint) unless otherwise indicated.

D. Cut exposed masonry units, where necessary, with a power saw. Allow units to dry before laying. Install cut units with cut surfaces and, where possible, cut edges concealed. Avoid the use (by proper layout) of less than half-size units.

E. Bond intersecting walls with masonry units or provide anchors spaced 24 inches on center.

F. Reinforcing: Install entire length of longitudinal side rods in mortar with a minimum cover of 1/2 inch on interior walls. Lap reinforcement a minimum of 6 inches. Do not bridge control and expansion joints in the wall system.

INCLUDE BELOW IF APPROPRIATE.

REVISE SUBPARAGRAPHS BELOW IF DIFFERENT SPACING IS REQUIRED; DELETE IF SHOWN ON DRAWINGS.

1. Space reinforcement not more than 16 inches o.c.
2. Provide reinforcement not more than 8 inches above and below wall openings and extending 12 inches beyond openings in addition to continuous reinforcement.

G. Build other work into the masonry work as shown, fitting masonry units around other work, and grouting for secure anchorage.

3.2 LINTELS

A. Provide concrete or masonry lintels where shown and where openings of more than 24 inches are shown without steel or other supporting lintels.

B. Provide minimum bearing of 8 inches at each jamb.

3.3 IDENTIFICATION

A. Provide permanent identification of all assemblies requiring opening protectives including fire walls, fire barriers, fire partitions, and smoke barriers.

B. Install in accordance with the requirements of Michigan Building Code chapter 7.

C. Location:

1. Locate in accessible concealed spaces above finished ceiling. In locations without accessible concealed location, coordinate location with architect.
2. Locate within 15 feet of the end of each wall and at intervals not exceeding 30 feet measured horizontally along the assembly.

D. Signage requirements:

1. Lettering:
   a. 3-inch minimum; 3/8-inch stroke width.
   b. Color: Red on white background
2. Verbiage incorporating project specific hourly rating. Refer to life safety plan for rating requirements:
   a. FIRE RATED ASSEMBLY (__HR) - PROTECT ALL OPENING
   b. SMOKE BARRIER - PROTECT ALL OPENINGS

3.4 CLEANING

MOST ACIDIC CLEANERS, EVEN PROPRIETARY PRODUCTS LISTED AS "MILD", ARE ACTUALLY QUITE STRONG. THEY MAY CAUSE DAMAGE TO MASONRY AND ADJACENT SURFACES AND ARE DIFFICULT TO COLLECT AND DISPOSE OF PROPERLY.

GOOD MASONRY PRACTICE INCLUDES REMOVING MORTAR FROM EXPOSED MASONRY FACES BEFORE SETTING. IF THIS IS NOT DONE, USE OF ACIDIC CLEANERS MAY BE NECESSARY. REFER TO AIA MASTERSPEC SECTION 42010 FOR LISTING OF PROPRIETARY ACIDIC CLEANERS AND READ PRODUCT LITERATURE BEFORE SPECIFYING. INCLUDE IN SPECIFICATION A PROVISION FOR TESTING A SMALL AREA BEFORE GENERAL CLEANING. CONTACT OSEH FOR INFORMATION REGARDING PROPER DISPOSAL.

A. Clean concrete masonry by cleaning method indicated in NCMA TEK 8-2A applicable to type of stain on exposed surfaces.

B. Clean excess mortar as work progresses.

C. Remove large mortar particles by hand using non-metallic scrapers or paddles.

D. Final cleaning: Clean masonry with stiff non-metallic brushes, clean water, and a mild non-acidic soap or detergent, if required. Do not use acids without prior written approval.

E. Dispose of wash water by methods described in Division 01 Section "Closeout Procedures."

END OF SECTION 042010

UNIVERSITY OF MICHIGAN
ARCHITECTURE, ENGINEERING AND CONSTRUCTION

ARCHITECTURE & ENGINEERING
326 East Hoover, Mail Stop B
Ann Arbor, MI 48109-1002
Phone: 734-764-3414
Fax: 734-936-3334

BuildingName
The Description of the Project
P00000000 0000

SPECIFICATION DIVISION 5

NUMBER SECTION DESCRIPTION

DIVISION 05 METALS
SECTION 051200 - STRUCTURAL STEEL FRAMING

END OF CONTENTS TABLE

DIVISION 05 METALS
SECTION 051200 - STRUCTURAL STEEL FRAMING

USE THIS MASTER FOR SMALL PROJECTS ONLY. SIGNIFICANT STRUCTURAL WORK SHOULD BE SPECIFIED USING AIA MASTERSPEC SECTION OF SAME NAME AND NUMBER.

EDIT THIS SECTION WITH STRUCTURAL DRAWINGS IN HAND.

PART 1 - GENERAL

1.1 SUMMARY

A. Extent of structural steel is shown on drawings.

1.2 SUBMITTALS

A. Shop Drawings: Show complete details for fabrication, assembly and erection.

1.3 QUALITY ASSURANCE

A. Codes and Standards: AISC "Code of Standard Practice for Steel Buildings and Bridges"; AISC "Specifications for the Design, Fabrication, and Erection of Structural Steel for Buildings including "Commentary"; AWS "Structural Welding Code"; comply with applicable provisions except as otherwise indicated.

PART 2 - PRODUCTS

2.1 MATERIALS

THE FOLLOWING LIST OF MATERIALS HAS BEEN EDITED FOR BREVITY. WHERE ADDITIONAL ITEMS ARE REQUIRED, AND FOR ALL BUT THE SIMPLEST STEEL STRUCTURES SUBSTITUTE THE AIA BASIC SECTION.

A. Structural Steel Shapes: ASTM A 572, Grade 50, unless otherwise indicated.

B. Structural Steel Plates and Bars: ASTM A 36, unless otherwise indicated.

C. Cold-Formed Structural Steel Tubing: ASTM A 500, Grade B.

D. Hot-Formed Structural Steel Tubing: ASTM A 501.

E. Steel Pipe: ASTM A 53, Type E or S, Grade B; Schedule 40 and as follows:

SELECT ONE BELOW.

1. Black finish.
2. Galvanized.

SELECT FASTENERS BELOW IN CONSULTATION WITH STRUCTURAL ENGINEER. HIGH STRENGTH, ASTM A 325, TYPE 1 ARE COMMONLY USED.

F. Nonhigh-Strength Bolts, Nuts, and Washers: ASTM A 307, Grade A (ASTM F 568, Property Class 4.6); carbon-steel, hex-head bolts; carbon-steel nuts; and flat, unhardened steel washers.

SELECT 1 BELOW.

1. Finish: Plain, uncoated.
2. Finish: Hot-dip zinc-coating, ASTM A 153, Class C.
3. Finish: Mechanically deposited zinc-coating, ASTM B 695, Class 50.

G. High-Strength Bolts, Nuts, and Washers: ASTM A 325, Type 1, heavy hex steel structural bolts, heavy hex carbon-steel nuts, and hardened carbon-steel washers.

SELECT 1 BELOW.

1. Finish: Plain, uncoated.
2. Finish: Hot-dip zinc-coating, ASTM A 153, Class C.
3. Finish: Mechanically deposited zinc-coating, ASTM B 695, Class 50.

RETAIN COMPRESSIBLE-WASHER, DIRECT-TENSION INDICATORS BELOW IN CONSULTATION WITH ENGINEER.

4. Direct-Tension Indicators: ASTM F 959, Type 325.
   a. Finish: Plain, uncoated.
   b. Finish: Mechanically deposited zinc-coating, ASTM B 695, Class 50.
   c. Finish: Mechanically deposited zinc-coating, ASTM B 695, Class 50, epoxy coated.

H. High-Strength Bolts, Nuts, and Washers: ASTM A 490, Type 1, heavy hex steel structural bolts, heavy hex carbon-steel nuts, and hardened carbon-steel washers, uncoated.

RETAIN COMPRESSIBLE-WASHER DEVICES BELOW IN CONSULTATION WITH ENGINEER.

1. Direct-Tension Indicators: ASTM F 959, Type 490, uncoated.

DELETE BELOW IF NO WELDING.

I. Welding Electrodes: Comply with AWS requirements.

DELETE BELOW IF NO PRIME PAINTING. UNITS EMBEDDED IN CONCRETE ARE USUALLY NOT PRIMED.

J. Shop Paint: Fast-curing, lead- and chromate-free universal modified -alkyd primer with good resistance to normal atmospheric corrosion, complying with performance requirements of FS TT-P-664.

DELETE BELOW IF NO GALVANIZED STEEL.

K. Galvanizing Repair Paint: High-zinc-dust-content paint for regalvanizing welds in galvanized steel, with dry film containing not less than 93 percent zinc dust by weight, and complying with SSPC Paint 20.

BELOW FOR HEAVY-DUTY APPLICATIONS NOT EXPOSED TO MOISTURE

L. Metallic Shrinkage-Resistant Grout: Premixed factory-packaged ferrous aggregate grout complying with ASTM C 1107, of consistency suitable for application, and with minute working time.

BELOW FOR APPLICATION EXPOSED TO MOISTURE

M. Nonmetallic Shrinkage-Resistant Grout: Premixed, nonmetallic, noncorrosive, nonstaining product containing selected silica sands, portland cement, shrinkage compensating agents, plasticizing and water-reducing agents, complying with ASTM C 1107, of consistency suitable for application, and with a 30-minute working time.

2.2 FABRICATION

A. In general, comply with AISC "Specifications" and final shop drawings. Mark and match-mark units for field assembly.

B. Connections: Use high-strength bolts for field connections.

1. Comply with AWS Code for procedures, appearance, and quality of welds.

C. Fabricate architecturally exposed structural steel with exposed surfaces smooth, square and free of surface blemishes, including pitting, rust, scale seam marks, roller marks, rolled trade names, and roughness.

1. Remove blemishes by filling, grinding, or by welding prior to cleaning, treating, and shop priming.

D. Holes: Provide holes required for securing other work to structural steel framing and for passage of other work through steel framing members, as shown on shop drawings.

1. Cut, drill or punch holes perpendicular to metal surfaces. Do not flame-cut holes or enlarge holes by burning. Drill holes in bearing plates.
2. Weld threaded nuts to framing and other specialty items as indicated to receive other work.

E. Shop Priming: Comply with the following requirements for preparation and application of priming:

1. Preparation for Shop Priming: Prepare uncoated ferrous metal surfaces to comply with minimum requirements indicated below for SSPC surface preparation specifications and environmental exposure conditions of installed metal fabrications:

BOTH OF BELOW APPLY TO LOCATIONS THAT WOULD NORMALLY REMAIN DRY IN SERVICE.

a. Exteriors (SSPC Zone 1B): SSPC-SP 6 "Commercial Blast Cleaning."
b. Interiors (SSPC Zone 1A): SSPC-SP 3 "Power Tool Cleaning."

2. Shop Priming: Shop prime surfaces, except the following:

DELETE INAPPLICABLE ITEMS BELOW.

a. Surfaces embedded in concrete or mortar. Extend priming of partially embedded members to a depth of 2 inches.
b. Surfaces to be field welded.

c. Surfaces to receive sprayed-on fire proofing.
d. Galvanized surfaces.

PART 3 - EXECUTION

3.1 PREPARATION

A. Prior to beginning erection, verify elevations of bearing surfaces and locations of anchorages. Do not proceed until unsatisfactory conditions have been corrected.

B. Provide temporary supports during erection to keep structural steel secure, plumb, and in alignment against temporary construction loads and loads equal in intensity to design loads.

3.2 ERECTION

A. Set structural steel accurately in locations and to elevations indicated and according to AISC specifications referenced in this Section.

ADD LEVELING PLATES TO PARA BELOW IF REQUIRED.

B. Base and Bearing Plates: Clean concrete and masonry bearing surfaces of bond-reducing materials and roughen surfaces prior to setting base and bearing plates. Clean bottom surface of base and bearing plates.

1. Set base and bearing plates for structural members on wedges, shims, or setting nuts as required.
2. Tighten anchor bolts after supported members have been positioned and plumbed. Do not remove wedges or shims but, if protruding, cut off flush with edge of base or bearing plate prior to packing with grout.
3. Pack grout solidly between bearing surfaces and plates so no voids remain. Finish exposed surfaces, protect installed materials, and allow to cure.
   a. Comply with manufacturer's instructions for proprietary grout materials.

C. Maintain erection tolerances of structural steel within AISC's "Code of Standard Practice for Steel Buildings and Bridges."

RETAIN BELOW WHEN ARCHITECTURALLY EXPOSED STRUCTURAL STEEL IS REQUIRED.

1. Maintain erection tolerances of architecturally exposed structural steel within AISC's "Code of Standard Practice for Steel Buildings and Bridges."

D. Align and adjust various members forming part of complete frame or structure before permanently fastening. Before assembly, clean bearing surfaces and other surfaces that will be in permanent contact. Perform necessary adjustments to compensate for discrepancies in elevations and alignment.

1. Level and plumb individual members of structure.

REVIEW SUBPARA BELOW WITH STRUCTURAL ENGINEER AND REVISE AS REQUIRED. DELETE TEMPERATURE ALLOWANCES IF NOT REQUIRED.

2. Establish required leveling and plumbing measurements on mean operating temperature of structure. Make allowances for difference between temperature at time of erection and mean temperature at which structure will be when completed and in service.

E. Splice members only where indicated.

RETAIN PARA BELOW WHEN WELDED, ARCHITECTURALLY EXPOSED STRUCTURAL STEEL IS REQUIRED.

F. Remove erection bolts on welded, architecturally exposed structural steel; fill holes with plug welds; and grind smooth at exposed surfaces.

G. Finish sections thermally cut during erection equal to a sheared appearance.

H. Do not enlarge unfair holes in members by burning or by using drift pins. Ream holes that must be enlarged to admit bolts.

3.3 FIELD CONNECTIONS

EDIT BELOW IN CONSULTATION WITH STRUCTURAL ENGINEER.

A. Install and tighten nonhigh-strength bolts, except where high-strength bolts are indicated.

DELETE ABOVE IF NO NONHIGH-STRENGTH BOLTING.

B. Install and tighten high-strength bolts according to RCSC's "Specification for Structural Joints Using ASTM A 325 or A 490 Bolts."

DELETE ABOVE AND BELOW IF NO HIGH STRENGTH BOLTING. IF H.S. BOLTING IS REQUIRED, SELECT ABOVE, BELOW OR BOTH IN CONSULTATION WITH ENGINEER.

C. Install and tighten high-strength bolts according to RCSC's "Load and Resistance Factor Design Specification for Structural Joints Using ASTM A 325 or A 490 Bolts."

RETAIN SUBPARAS BELOW WITH EITHER H.S. BOLT TYPE ABOVE.

1. Bolts: ASTM A 325 high-strength bolts, unless otherwise indicated.

SELECT ABOVE OR BELOW.

2. Bolts: ASTM A 490 high-strength bolts, unless otherwise indicated.
3. Connection Type: Snug tightened, unless indicated as slip-critical, direct-tension, or tensioned shear/bearing connections.

SELECT ABOVE OR BELOW IN CONSULTATION WITH ENGINEER.

4. Connection Type: Slip-critical, direct-tension, or tensioned shear/bearing connections as indicated.

D. Weld Connections: Comply with AWS D1.1 for procedures, appearance and quality of welds, and methods used in correcting welding work.

1. Comply with AISC specifications referenced in this Section for bearing, adequacy of temporary connections, alignment, and removal of paint on surfaces adjacent to field welds.

DELETE BELOW IF BUILT-UP SECTIONS ARE NOT REQUIRED.

2. Assemble and weld built-up sections by methods that will maintain true alignment of axes without warp.

RETAIN BELOW WHEN ARCHITECTURALLY EXPOSED STRUCTURAL STEEL IS REQUIRED.

3. Verify that weld sizes, fabrication sequence, and equipment used for architecturally exposed structural steel will limit distortions to allowable tolerances. Prevent surface bleeding of back-side welding on exposed steel surfaces. Grind smooth exposed fillet welds 1/2 inch and larger. Grind flush butt welds. Dress exposed welds.

3.4 CLEANING

A. Touchup Painting: Clean and touchup paint of field welds, bolted connections, and abraded areas of shop paint on structural steel.

END OF SECTION 051200

UNIVERSITY OF MICHIGAN
ARCHITECTURE, ENGINEERING AND CONSTRUCTION

ARCHITECTURE & ENGINEERING
326 East Hoover, Mail Stop B
Ann Arbor, MI 48109-1002
Phone: 734-764-3414
Fax: 734-936-3334

BuildingName
The Description of the Project
P00000000 0000

SPECIFICATION DIVISION 5

NUMBER SECTION DESCRIPTION

DIVISION 05 METALS
SECTION 053100 - STEEL DECKING

END OF CONTENTS TABLE

DIVISION 05 METALS
SECTION 053100 - STEEL DECKING

PART 1 - GENERAL

1.1 SUMMARY

A. This Section includes steel deck units for roof repair.

1.2 SUBMITTALS

A. Product data including manufacturer's specifications and installation instructions for each type of decking and accessories.

1. Provide test data for mechanical fasteners used in lieu of welding for fastening deck to supporting structures.

B. Shop drawings showing layout of deck units, anchorage details, and sump pans, cut openings, special jointing, and other accessories.

C. Submit the following to Factory Mutual for plan review at least three weeks prior to commencing installation: completed FM application, shop drawings and product data complying with the requirements listed under “Quality Assurance” article in this section. Include sufficient information on drawings to ensure compliance with FM fastening requirements for both field areas and perimeter areas.

1.3 QUALITY ASSURANCE

A. Codes and Standards: Comply with provisions of the following codes and standards, except as otherwise indicated:

1. American Iron and Steel Institute (AISI), "Specification for the Design of Cold-Formed Steel Structural Members."
2. American Welding Society (AWS), D1.3 "Structural Welding Code - Sheet Steel."
3. Steel Deck Institute (SDI), "Design Manual for Composite Decks, Form Decks and Roof Decks."

B. Qualification of Field Welding: Use qualified welding processes and welding operators in accordance with "Welder Qualification" procedures of AWS.

C. Underwriters' Label: Provide metal floor deck units listed in Underwriters' Laboratories "Fire Resistance Directory", with each deck unit bearing the UL label and marking for specific system detailed.

D. FM Listing: Provide steel roof deck units that have been evaluated by Factory Mutual System and are listed in "Factory Mutual Approval Guide" for "Class 1" fire-rated construction.

SELECT THE APPROPRIATE FM CLASS FOR ROOF CONSTRUCTION IN THE FOLLOWING PARAGRAPH

E. FM Standards: Comply with FM Global Standards, the FM Research Approval Guide and all applicable FM data sheets, including but not limited to, Property Loss Prevention Data Sheets 1-28, 1-29, 1-49, and 1-54. Roof assembly shall meet the requirements of FM Class 1-60 1-90 1-120.

PART 2 - PRODUCTS

2.1 MANUFACTURERS

A. Manufacturers: Subject to compliance with requirements, provide products of one of the following:

Bowman Metal Deck Div., Cyclops Corp.
Consolidated Systems, Inc.
Roll Form Products, Inc.
Roof Deck, Inc.
United Steel Deck, Inc.
Vulcraft Div., Nucor Corp.
Wheeling Corrugating Co.

2.2 MATERIALS

A. Steel for Galvanized Metal Deck Units: ASTM A 446, grade as required to comply with SDI specifications.

B. Sheet Metal Accessories: ASTM A 526, commercial quality, galvanized.

REVISE BELOW IF HEAVIER GALVANIZING (G90) REQUIRED.

C. Galvanizing: ASTM A 525, G60.

D. Galvanizing Repair: Where galvanized surfaces are damaged, prepare surfaces and repair in accordance with procedures specified in ASTM A 780.

2.3 FABRICATION

A. General: Form deck units in lengths to span three or more supports, with flush, telescoped, or nested 2-inch laps at ends and interlocking or nested side laps, of metal thickness, depth, and width as indicated.

B. Roof Deck Units: Provide deck configurations that comply with SDI "Specifications and Commentary for Steel Roof Deck."

C. Roof Sump Pans: Fabricate from single piece of 0.071-inch min. (14 gage) galvanized sheet steel with level bottoms and sloping sides to direct water flow to drain. Provide sump pans of adequate size to receive roof drains and with bearing flanges not less than 3 inches wide. Recess pans not less than 1-1/2 inches below roof deck surface unless otherwise shown or required by deck configuration. Holes for drains will be cut in the field by others.

PART 3 - EXECUTION

3.1 INSTALLATION

A. General: Install deck units and accessories in strict accordance with manufacturer's recommendations, shop drawings, Factory Mutual standards and as specified herein.

B. Place deck units on supporting steel framework and adjust to final position with ends accurately aligned and bearing on supporting members before being permanently fastened. Do not stretch or compress side lap interlocks.

C. Place deck units flat and square, secured to adjacent framing without warp or deflection.

D. Coordinate and cooperate with structural steel erector in locating decking bundles to prevent overloading of structural members.

E. Fastening Deck Units:

1. Fasten roof deck units to steel supporting members by not less than 1/2-inch-diameter puddle welds or elongated welds of equal strength, spaced not more than 12 inches at every support, and at closer spacing where indicated. In addition, secure deck to each supporting member in ribs where side laps occur.
2. Comply with AWS requirements and procedures for manual shielded metal arc welding, appearance and quality of welds, and methods used in correcting welding work.
   a. Use welding washers where recommended by deck manufacturer.
3. Mechanical fasteners, either powder-actuated or pneumatically driven, may be used in lieu of welding. Locate mechanical fasteners and install in accordance with deck manufacturer's instructions.
4. Mechanically fasten side laps of adjacent deck units between supports, at intervals not exceeding 36 inches o.c., using self-tapping No. 8 or larger machine screws.
5. Uplift Loading: Install and anchor roof deck units to resist gross uplift loading of 45 lbs. psf at eave overhang and 30 lbs. psf for other roof areas.

F. Cutting and Fitting: Cut and neatly fit deck units and accessories around other work projecting through or adjacent to the decking, as shown.

G. Reinforcement at Openings: Provide additional metal reinforcement and closure pieces as required for strength, continuity of decking, and support of other work shown.

H. Roof Sump Pans: Place over openings provided in roof decking and weld to top decking surface. Space welds not more than 12 inches o.c. with at least one weld at each corner.

I. Touch-Up Painting: After decking installation, wire brush, clean, and paint scarred areas, welds, and rust spots on top and bottom surfaces of decking units and supporting steel members.

1. Touch-up galvanized surfaces with galvanizing repair paint applied in accordance with manufacturer's instructions.

END OF SECTION 053100

UNIVERSITY OF MICHIGAN
ARCHITECTURE, ENGINEERING AND CONSTRUCTION

ARCHITECTURE & ENGINEERING
326 East Hoover, Mail Stop B
Ann Arbor, MI 48109-1002
Phone: 734-764-3414
Fax: 734-936-3334

BuildingName
The Description of the Project
P00000000 0000

SPECIFICATION DIVISION 5

NUMBER SECTION DESCRIPTION

DIVISION 05 METALS
SECTION 055000 - METAL FABRICATIONS

END OF CONTENTS TABLE

DIVISION 05 METALS
SECTION 055000 - METAL FABRICATIONS

NOV 2004 - CHANGED LADDER RUNGS PER ROOFING DEPT. REQUEST.

PART 1 - GENERAL

1.1 SUMMARY

A. Types of metal fabrications include the following:

EDIT BELOW TO SUIT PROJECT

1. Rough hardware.
2. Steel ladders.
3. Loose bearing and leveling plates.
4. Loose steel lintels.
5. Railings and guards.
6. Metal stairs.
7. Metal bar gratings.
8. Miscellaneous framing and supports.
9. Miscellaneous steel trim.
10. Structural steel door frames.

1.2 SUBMITTALS

A. Product data indicating compliance with requirements for the following:

EDIT BELOW TO SUIT PROJECT

1. Grout.
2. Metal grating.

B. Shop drawings detailing fabrication and erection of each metal fabrication indicated. Include plans, sections, and details of metal fabrications and their connections. show anchorage and accessory items. Provide templates for anchors and bolts installed under other Sections.

C. Welder certificates signed by the Contractor and indicating that welders comply with requirements specified under "Quality Assurance" Article.

1.3 QUALITY ASSURANCE

A. Codes and Standards: AISC "Specifications for the Design, Fabrication and Erection of Structural Steel for Buildings"; AWS "Structural Welding Code"; comply with applicable provisions.

B. Welding Standards: Comply with applicable provisions of AWS D1.1 "Structural Welding Code - Steel," AWS D1.2 "Structural Welding Code - Aluminum," and AWS D1.3 "Structural Welding Code - Sheet Steel."

1. Certify that each welder has satisfactorily passed AWS qualification tests for welding processes involved and if pertinent, has undergone recertification.

1.4 PROJECT CONDITIONS

A. Where field measurements cannot be made without delaying The Work, guarantee dimensions and proceed with fabricating products without field measurements. Coordinate construction to ensure that actual dimensions correspond to guaranteed dimensions. Allow for trimming and fitting.

PART 2 - PRODUCTS

2.1 FERROUS MATERIALS

A. Metal Surfaces, General: For metal fabrications exposed to view in the completed Work, provide materials selected for their surface flatness, smoothness, and freedom from surface blemishes. Do not use materials with exposed pitting, seam marks, roller marks, rolled trade names, or roughness.

B. Steel Plates, Shapes, Bars: ASTM A 36.

C. Rolled Steel Floor Plates: ASTM A 786.

D. Steel Tubing: Product type (manufacturing method) as follows:

1. Cold-Formed Steel Tubing: ASTM A 500.
2. Hot Formed Steel Tubing: ASTM A 501.

REVISE BELOW AS REQUIRED.

a. For exterior installations and where indicated, provide tubing with hot-dip galvanized coating per ASTM A 53.

E. Steel Pipe: ASTM A 53, standard weight (schedule 40), unless otherwise indicated, or another weight required by structural loads.

1. Black finish, unless otherwise indicated.

DELETE ABOVE OR BELOW IF NOT APPLICABLE.

2. Galvanized finish for exterior installations and where indicated.

F. Welding Rods and Bare Electrodes: Select according to AWS specifications for the metal alloy to be welded.

2.2 PAINT

DELETE BELOW IF NO SHOP PRIMING REQUIRED.

A. Shop Primer for Ferrous Metals: Fast-curing, lead- and chromate-free universal modified-alkyd primer with good resistance to normal atmospheric corrosion, complying with performance requirements of FS TT-P-664. Select paint for compatibility with finish paint systems indicated, and for capability to provide a sound foundation for field-applied topcoats, despite prolonged exposure.

DELETE BELOW IF NO GALVANIZING.

B. Galvanizing Repair Paint: High-zinc-dust-content paint for regalvanizing welds in galvanized steel, with dry film containing not less than 94 percent zinc dust by weight, and complying with SSPC Paint 20.

2.3 FASTENERS

BELOW IS GENERAL ONLY. IF SPECIFIC FASTENERS ARE REQUIRED AND NOT INDICATED ON DRAWINGS, ADD REQUIREMENTS HERE.

A. General: Provide plated fasteners complying with ASTM B 633, Class Fe/Zn 25 for electrodeposited zinc coating, for exterior use or where built into exterior walls. Provide fasteners as indicated on drawings, or if not indicated, select fasteners for the type, grade, and class required to provide a complete, secure installation.

2.4 GROUT AND ANCHORING CEMENT

RETAIN BELOW FOR HEAVY-DUTY STRUCTURAL GROUTING APPLICATIONS. DO NOT USE IN WET AREAS OR ON EXTERIOR.

A. Nonshrink, Metallic Grout: Factory-packaged, ferrous-aggregate grout complying with ASTM C 1107, specifically recommended by manufacturer for heavy-duty loading applications. Subject to compliance with requirements, provide one of the following:

Hi Mod Grout; Euclid Chemical Co.
Embeco 885 and 636; Master Builders Technologies, Inc.
Ferrolith G Redi-Mix and G-NC; Sonneborn Building Products-ChemRex, Inc.

RETAIN BELOW FOR GROUTING APPLICATIONS WHERE NONSTAINING GROUT IS REQUIRED.

B. Nonshrink, Nonmetallic Grout: Factory-packaged, nonstaining, noncorrosive, nongaseous grout complying with ASTM C 1107. Provide grout specifically recommended by manufacturer for interior and exterior applications. Subject to compliance with requirements, provide one of the following:

Construction Grout; W. R. Bonsal Co.
Sure-grip High Performance Grout; Dayton Superior Corp.
Euco N-S Grout; Euclid Chemical Co.
Five Star Grout; Five Star Products.
Vibropruf #11; Lambert Corp.
Crystex; L & M Construction Chemicals, Inc.
Masterflow 928 and 713; Master Builders Technologies, Inc.
Sealtight 588 Grout; W. R. Meadows, Inc.
Sonogrout 14; Sonneborn Building Products-ChemRex, Inc.

BELOW FOR SETTING HANDRAILS AT INTERIOR APPLICATIONS ONLY.

C. Interior Anchoring Cement: Factory-packaged, nonshrink, nonstaining, hydraulic controlled expansion cement formulation for mixing with water at Project site to create pourable anchoring, patching, and grouting compound. Use for interior applications only. Subject to compliance with requirements, provide one of the following:

Ankertite Cement; Dayton Superior Corp.
Por-Rok; Minwax Construction Products Division.

BELOW SETTING HANDRAILS AT BOTH INTERIOR AND EXTERIOR APPLICATIONS.

D. Erosion-Resistant Anchoring Cement: Factory-packaged, nonshrink, nonstaining, hydraulic controlled expansion cement formulation for mixing with water at Project site to create pourable anchoring, patching, and grouting compound. Provide formulation that is resistant to erosion from water exposure without need for protection by a sealer or waterproof coating and is recommended for exterior use by manufacturer. Subject to compliance with requirements, provide one of the following:

Bonsal Anchor Cement; W.R. Bonsal Co.
Super Por-Rok; Minwax Construction Products Division.
Thorogrip; Thoro Systems Products.

2.5 FABRICATION, GENERAL

A. Form metal fabrications from materials of size, thickness, and shapes indicated but not less than that needed to comply with performance requirements indicated. Work to dimensions indicated or accepted on shop drawings, using proven details of fabrication and support. Use type of materials indicated or specified for various components of each metal fabrication.

B. Form exposed work true to line and level with accurate angles and surfaces and straight sharp edges.

BELOW IS INTENDED FOR EXTERIOR METALWORK. REVISE TO SUIT PROJECT CONDITIONS AND METALWORK EXPOSURE.

C. Allow for thermal movement resulting from the following maximum change (range) in ambient temperature in the design, fabrication, and installation of installed metal assemblies to prevent buckling, opening up of joints, and overstressing of welds and fasteners. Base design calculations on actual surface temperatures of metals due to both solar heat gain and nighttime sky heat loss.

1. Temperature Change (Range): 100 deg F.

D. Shear and punch metals cleanly and accurately. Remove burrs.

E. Ease exposed edges to a radius of approximately 1/32 inch, unless otherwise indicated. Form bent-metal corners to smallest radius possible without causing grain separation or otherwise impairing work.

F. Remove sharp or rough areas on exposed traffic surfaces.

G. Weld corners and seams continuously to comply with the following:

1. Use materials and methods that minimize distortion and develop strength and corrosion resistance of base metals.
2. Obtain fusion without undercut or overlap.
3. Remove welding flux immediately.
4. At exposed connections, finish exposed welds and surfaces smooth and blended so that no roughness shows after finishing, and contour of welded surface matches those adjacent.

H. Form exposed connections with hairline joints, flush and smooth, using concealed fasteners wherever possible. Use exposed fasteners of type indicated or, if not indicated, Phillips flat-head (countersunk) screws or bolts. Locate joints where least conspicuous.

I. Provide for anchorage of type indicated; coordinate with supporting structure. Fabricate and space anchoring devices to secure metal fabrications rigidly in place and to support indicated loads.

J. Shop Assembly: Preassemble items in shop to greatest extent possible to minimize field splicing and assembly. Disassemble units only as necessary for shipping and handling limitations. Use connections that maintain structural value of joined pieces. Clearly mark units for reassembly and coordinated installation.

K. Cut, reinforce, drill, and tap metal fabrications as indicated to receive finish hardware, screws, and similar items.

L. Fabricate joints that will be exposed to weather in a manner to exclude water, or provide weep holes where water may accumulate.

BELOW FOR SUPPORTING AND ATTACHING WOODWORK.

2.6 ROUGH HARDWARE

A. Furnish bent, or otherwise custom-fabricated, bolts, plates, anchors, hangers, dowels, and other miscellaneous steel and iron shapes as required for framing and supporting woodwork, and for anchoring or securing woodwork to concrete or other structures. Straight bolts and other stock rough hardware items are specified in Division 06 Sections.

B. Fabricate items to sizes, shapes, and dimensions required. Furnish malleable-iron washers for heads and nuts that bear on wood structural connections, and furnish steel washers elsewhere.

2.7 STEEL LADDERS

SEE AIA MASTERSPEC FOR SAFETY CAGES AND SHIP'S LADDERS, IF REQUIRED.

A. General: Fabricate ladders for the locations shown, with dimensions, spacings, details, and anchorages as indicated. Comply with requirements of ANSI A14.3.

DELETE REQUIREMENTS BELOW IF LADDERS ARE DETAILED ON DRAWINGS.

B. Side Rails: Continuous, steel, 1/2-by-2-1/2-inch flat bars, with eased edges, spaced 18 inches apart.

C. Rungs: Steel 13 ga. HRPO rungs with cold-formed closely spaced perforated buttons for slip resistance.

D. Fit rungs in centerline of side rails, plug weld and grind smooth on outer rail faces.

E. Support each ladder at top and bottom and at intermediate points spaced not more than 5 feet o.c. with welded or bolted steel brackets.

1. Size brackets to support design dead and live loads indicated and to hold centerline of ladder rungs clear of the wall surface by not less than 7 inches.
2. Extend side rails 42 inches above top rung, and return rails to wall or structure unless other secure handholds are provided. If the adjacent structure does not extend above the top rung, goose-neck the extended rails back to the structure to provide secure ladder access.

F. Galvanize ladders, including brackets and fasteners, in exterior locations.

2.8 LOOSE BEARING AND LEVELING PLATES

A. Provide loose bearing and leveling plates for steel items bearing on masonry or concrete construction, made flat, free from warps or twists, and of the required thickness and bearing area. Drill plates to receive anchor bolts and for grouting as required. Galvanize after fabrication.

2.9 LOOSE STEEL LINTELS

A. Fabricate loose structural steel lintels from steel angles and shapes of size indicated for openings and recesses in masonry walls and partitions at locations indicated.

B. Weld adjoining members together to form a single unit where indicated.

DELETE BELOW IF BEARING LENGTHS ARE INDICATED ON DRAWINGS OR SCHEDULES.

C. Size loose lintels for equal bearing of 1 inch per foot of clear span but not less than 8 inches bearing at each side of openings, unless otherwise indicated.

D. Galvanize loose steel lintels located in exterior walls.

2.10 RAILINGS AND GUARDS

A. Railings, General: Fabricate tube handrails with dimensions, spacing, and anchorages indicated. Comply with requirements of Michigan Building Code, unless otherwise indicated.

B. Railings: Interconnect railing members by butt-welding. Notch ends of intersecting members to fit contour of tube to which end is joined and weld all around at tee and cross intersections. Form curves by bending tube in jigs to produce uniform curvature for each repetitive configuration required; maintain cylindrical cross-section of tube throughout entire bend without buckling, twisting, cracking, or otherwise deforming exposed surfaces of tube.

1. Shape for Handrails: Round.
2. Shape for Members Other Than Handrails: Round, unless otherwise indicated on drawings.
3. Outside Diameter of Tube for Handrails: 1-1/2 inches.
4. Dimensions of Members Other Than Handrails: As indicated on drawings.
5. Tube Wall Thickness: 11 gage.
6. 1-1/4-inch O.D. pipe is not acceptable for use as a handrail.
7. Rail Ends: Provide wall returns at ends of wall-mounted handrails. Weld 3/16-inch thick steel plate at ends of tube, except where clearance between tube end and adjoining wall surface is less than 1/4-inch.
8. Supports: Space support posts or brackets as shown on drawings, but not more than 6 feet on center.
9. Brackets, Flanges, Fittings, and Anchors: Provide wall brackets, end closures, flanges, miscellaneous fittings, and anchors for interconnections of tube attachment of railings and handrails to other work. Furnish inserts and other anchorage devices for connecting railings and handrails to concrete or masonry work.

MODIFY BELOW FOR VERTICAL BARS OR TUBES.

C. Guards: Provide infill panels where indicated for interior stairs. Fabricate units from 10 gage flattened, expanded carbon steel sheet with 3/4 inch diamond pattern and weighing approximately 1.7 lbs per sq, ft. Provide each panel with a continuous "U" shaped perimeter frame fabricated of 18 gage sheet metal, lapping both sides of panel 1-inch, and with mitered corners. Include mounting tabs indicated on drawings.

D. Finish: As follows:

1. Interior Handrails and Components: Black finish.
2. Exterior Handrails and Components: Galvanized after fabrication.

2.11 METAL STAIRS

A. Metal Stairs: Construct stairs to conform to sizes and arrangements indicated. Join pieces together by welding, unless otherwise indicated. Provide complete stair assemblies, including metal framing, hangers, columns, railings, newels, balusters, struts, clips, brackets, bearing plates, and other components necessary for the support of stairs and platforms, and as required to anchor and contain the stairs on the supporting structure.

1. Comply with NAAMM "Metal Stair Manual" "Recommended Voluntary Minimum Standards for Fixed Metal Stairs" for Commercial class stair, except where more stringent requirements are indicated.
2. Framing: Fabricate stringers of structural steel shapes shown. Provide closures for exposed stringer ends. Construct platforms of structural steel channel headers and miscellaneous framing members as shown. Weld headers to strings and framing members to strings and headers.
3. Metal Pan Risers, Subtreads, and Subplatforms: Uncoated, 12 gage, cold-rolled steel sheet metal formed into risers and subtreads to conform to configuration shown. Weld brackets to stringers and metal pans to brackets.
4. Stair Railings and Handrails: Comply with applicable requirements specified elsewhere in this Section. Connect to stair framing by direct welding.

BELOW IS LIGHT-DUTY UNIT FOR PEDESTRIAN TRAFFIC. REFER TO AIA MASTERSPEC FOR MORE COMPLETE SELECTION OF GRATING TYPES AND MATERIALS.

2.12 METAL BAR GRATINGS

A. Welded Steel Gratings: Fabricate welded steel gratings to comply with requirements of "Standard Specifications for Metal Bar Grating and Metal Bar Grating Treads" published in ANSI/NAAMM A202.1 "Metal Bar Grating Manual" and as indicated below:

1. Mark/Size: W-19-4 (welded with bearing bars 1-3/16 inch o.c. and cross bars 4 inches o.c.)/bearing bar sizes as indicated.
2. Bearing bar size: 1-1/2" by 3/16".
3. Traffic Surface: Plain.

SELECT ABOVE OR BELOW.

4. Traffic Surface: Applied abrasive finish consisting of aluminum oxide aggregate in an epoxy resin adhesive.
5. Steel Finish: Hot-dip galvanized with a coating weight of not less than 1.8 oz. per sq. ft. of coated surface.
6. Fabricate removable grating sections with banding bars attached by welding to entire perimeter of each section. Include anchors and fasteners of type recommended by manufacturer, for attachment to supports.
   a. Provide not less than 4 saddle clips for each grating section and spaced not less than 15/16 inch o.c, with each clip designed and fabricated to fit over 2 bearing bars.
   b. Furnish threaded bolts with nuts and washers for each clip required.
7. Fabricate cutouts in grating sections for penetrations indicated. Arrange layout of cutouts to permit grating removal without disturbing items penetrating gratings.
   a. Edge band openings in grating that interrupt 4 or more bearing bars with bars of same size and material as bearing bars.
   b. Do not notch bearing bars at supports to maintain elevation.

8. Manufacturers: Subject to compliance with requirements, provide metal bar gratings by one of the following:
   Alabama Metal Industries Corp.
   Barnett/Bates Corp.
   Blaw-Knox Grating Div., Blaw-Knox Corp.
   IKG Industries
   Klemp Corp.
   Ohio Gratings, Inc.
   Reliance Steel Products, Inc.
   Seidelhuber Metal Products, Inc.
   Trueweld, Inc.

2.13 MISCELLANEOUS FRAMING AND SUPPORTS

A. General: Provide steel framing and supports for applications indicated that are not a part of structural steel framework as required to complete the Work.

B. Fabricate units to sizes, shapes, and profiles indicated and required to receive other adjacent construction retained by framing and supports. Fabricate from structural steel shapes, plates, and steel bars of welded construction using mitered joints for field connection. Cut, drill, and tap units to receive hardware, hangers, and similar items.

1. Equip units with integrally welded anchors for casting into concrete or building into masonry. Furnish inserts if units must be installed after concrete is placed.
   a. Except as otherwise indicated, space anchors 24 inches o.c. and provide minimum anchor units in the form of steel straps 1-1/4 inches wide by 1/4 inch thick by 8 inches long.

REVISE BELOW TO SUIT SPECIFIC PROJECT REQUIREMENTS. ADD SIMILAR PROVISIONS FOR OTHER SUPPORTS, SUCH AS FOR OPERABLE PARTITIONS, OVERHEAD DOORS, ETC.

C. Toilet Partition Supports: Fabricate support for suspended toilet partitions as follows:

1. Beams: Continuous steel shapes as shown on drawings, or if not shown, of size required to limit deflection to L/360 between hangers, but use not less than C8 by 11.5 channels or another shape with equivalent structural properties.
2. Hangers: Steel rods as shown on drawings, or if not shown, 1/2-inch minimum diameter, spaced not more than 36 inches o.c. Thread rods to receive anchor and stop nuts. Fit hangers with wedge-shaped washers for full bearing on sloping flanges of support beam.
3. Braces and Angles: Steel angles of size required for rigid support of beam and for secure anchorage.

DELETE BELOW IF NO EXTERIOR FRAMING AND SUPPORTS.

D. Galvanize miscellaneous framing and supports in exterior locations.

2.14 MISCELLANEOUS STEEL TRIM

A. Unless otherwise indicated, fabricate units from structural steel shapes, plates, and bars of profiles shown with continuously welded joints, and smooth exposed edges. Miter corners and use concealed field splices wherever possible.

B. Provide cutouts, fittings, and anchorages as required to coordinate assembly and installation with other work. Provide anchors, welded to trim, for embedding in concrete or masonry construction, spaced not more than 6 inches from each end, 6 inches from corners, and 24 inches o.c., unless otherwise indicated.

C. Galvanize miscellaneous steel trim in exterior locations.

2.15 STRUCTURAL STEEL DOOR FRAMES

A. Fabricate steel door frames from structural shapes and bars of size and to dimensions indicated, fully welded together, with 5/8-by-1-1/2-inch steel bar stops, unless otherwise indicated. Plug-weld built-up members and continuously weld exposed joints. Secure removable stops to frame with countersunk machine screws, uniformly spaced at not more than 10 inches o.c. Reinforce frames and drill and tap as required to accept finish hardware.

B. Provide steel strap anchors for securing door frames into adjoining concrete or masonry, using 1/8-by-2-inch straps of the length required for a minimum 8-inch embedment, unless otherwise indicated. Weld anchors to frame jambs no more than 12 inches from both bottom and head of frame and space anchors not more than 30 inches apart.

DELETE BELOW IF NOT REQUIRED. DOOR FRAMES CONNECTED TO STRUCTURAL STEEL FRAMING ARE SPECIFIED WITH THAT WORK IN ANOTHER DIVISION 05 SECTION.

C. Extend bottom of frames to floor elevation indicated with steel angle clips welded to frames for anchoring frame to floor with expansion shields and bolts.

D. Galvanize frames and anchors in exterior locations.

2.16 STEEL AND IRON FINISHES

A. Galvanizing: For those items indicated for galvanizing, apply zinc coating by the hot-dip process complying with the following requirements:

1. ASTM A 153 for galvanizing iron and steel hardware.
2. ASTM A 123 for galvanizing both fabricated and unfabricated iron and steel products made of uncoated rolled, pressed, and forged shapes, plates, bars, and strip 0.0299 inch thick or thicker.

B. Preparation for Shop Priming: Prepare uncoated ferrous metal surfaces to comply with minimum requirements indicated below for SSPC surface preparation specifications and environmental exposure conditions of installed metal fabrications:

BOTH OF BELOW APPLY TO LOCATIONS THAT WOULD NORMALLY REMAIN DRY IN SERVICE.

1. Exteriors (SSPC Zone 1B): SSPC-SP 6 "Commercial Blast Cleaning."
2. Interiors (SSPC Zone 1A): SSPC-SP 3 "Power Tool Cleaning."

C. Apply shop primer to uncoated surfaces of metal fabrications, except those with galvanized finishes or to be embedded in concrete, sprayed-on fireproofing, or masonry, unless otherwise indicated. Comply with requirements of SSPC-PA 1 "Paint Application Specification No. 1" for shop painting.

PART 3 - EXECUTION

3.1 PREPARATION

A. Coordinate and furnish anchorages, setting drawings, diagrams, templates, instructions, and directions for installing anchorages, including concrete inserts, sleeves, anchor bolts, and miscellaneous items having integral anchors that are to be embedded in concrete or masonry construction. Coordinate delivery of such items to Project site.

B. Set sleeves in concrete with tops flush with finish surface elevations. Protect sleeves from water and concrete entry.

3.2 INSTALLATION, GENERAL

A. Fastening to In-Place Construction: Provide anchorage devices and fasteners where necessary for securing miscellaneous metal fabrications to in-place construction. Include threaded fasteners for concrete and masonry inserts, toggle bolts, through-bolts, lag bolts, wood screws, and other connectors as required.

B. Cutting, Fitting, and Placement: Perform cutting, drilling, and fitting required for installing miscellaneous metal fabrications. Set metal fabrication accurately in location, alignment, and elevation; with edges and surfaces level, plumb, true, and free of rack; and measured from established lines and levels.

C. Provide temporary bracing or anchors in formwork for items that are to be built into concrete masonry or similar construction.

D. Fit exposed connections accurately together to form hairline joints. Weld connections that are not to be left as exposed joints but cannot be shop-welded because of shipping size limitations. Do not weld, cut, or abrade the surfaces of exterior units that have been hot-dip galvanized after fabrication and are intended for bolted or screwed field connections.

E. Field Welding: Comply with the following requirements:

1. Use materials and methods that minimize distortion and develop strength and corrosion resistance of base metals.
2. Obtain fusion without undercut or overlap.
3. Remove welding flux immediately.

4. At exposed connections, finish exposed welds and surfaces smooth and blended so that no roughness shows after finishing, and contour of welded surface matches those adjacent.

DELETE ARTICLES BELOW NOT APPLICABLE TO PROJECT.

3.3 SETTING LOOSE PLATES

A. Clean concrete and masonry bearing surfaces of bond-reducing materials, and roughen to improve bond to surfaces. Clean bottom surface of bearing plates.

B. Set loose leveling and bearing plates on wedges or other adjustable devices. After the bearing members have been positioned and plumbed, tighten the anchor bolts. Do not remove wedges or shims, but if protruding, cut off flush with the edge of the bearing plate before packing with grout.

1. Use nonshrink, metallic grout in concealed locations where not exposed to moisture; use nonshrink, nonmetallic grout in exposed locations, unless otherwise indicated.

DELETE BELOW IF NOT REQUIRED.

2. Pack grout solidly between bearing surfaces and plates to ensure that no voids remain.

3.4 INSTALLING SUPPORTS FOR TOILET PARTITIONS

A. Anchor supports securely to and rigidly brace from overhead building structure.

3.5 ADJUSTING AND CLEANING

A. Touchup Painting: Cleaning and touchup painting of field welds, bolted connections, and abraded areas of the shop paint on miscellaneous metal is specified in Division 09 Section "Painting."

B. For galvanized surfaces, clean welds, bolted connections, and abraded areas, and apply galvanizing repair paint to comply with ASTM A 780.

END OF SECTION 055000

UNIVERSITY OF MICHIGAN
ARCHITECTURE, ENGINEERING AND CONSTRUCTION

ARCHITECTURE & ENGINEERING
326 East Hoover, Mail Stop B
Ann Arbor, MI 48109-1002
Phone: 734-764-3414
Fax: 734-936-3334

BuildingName
The Description of the Project
P00000000 0000

SPECIFICATION DIVISION 5

NUMBER SECTION DESCRIPTION

DIVISION 05 METALS
SECTION 055800 - FORMED-METAL FABRICATIONS

END OF CONTENTS TABLE

DIVISION 05 METALS
SECTION 055800 - FORMED-METAL FABRICATIONS

PART 1 - GENERAL

THIS SECTION INCLUDES A LIMITED LIST OF SHEET METAL ITEMS. OTHER POSSIBILITIES INCLUDE LIGHTING TROUGHS, COLUMN COVERS, EXTERIOR OR INTERIOR CLOSURE STRIPS, VARIOUS CANOPIES, HOODS AND OTHER ARCHITECTURAL STRUCTURES.

1.1 SUMMARY

A. This Section includes the following:

EDIT BELOW TO SUIT PROJECT.

1. Pockets for window treatment.
2. Filler panels.

1.2 SUBMITTALS

A. Shop drawings detailing fabrication and installation of sheet metal fabrications. Include plans, elevations, sections, details of components, and attachments to other units of Work. Indicate jointing, fasteners, anchorage, accessory items, and finishes.

B. Samples for initial selection in the form of manufacturer's color charts showing the full range of colors, textures, and patterns available for each type of sheet metal fabrication indicated.

1.3 PROJECT CONDITIONS

A. Field Measurements: Check actual dimensions of other construction by accurate field measurements before fabrication of sheet metalwork; show recorded measurements on final shop drawings.

1. Where field measurements cannot be made without delaying the Work, guarantee dimensions and proceed with fabricating sheet metalwork without field measurements. Coordinate other construction to ensure that actual dimensions correspond to guaranteed dimensions.

PART 2 - PRODUCTS

2.1 SHEET METAL

A. General: Provide sheet metal selected for surface flatness, smoothness, and freedom from surface blemishes where exposed to view in the finished unit. Do not use materials with pitting, seam marks, roller marks, variations in flatness exceeding those permitted by referenced standards for stretcher-leveled metal sheet, stains, discoloration, or other imperfections.

SELECT MATERIALS FROM THE FOLLOWING, DELETE OTHERS, OR REVISE AS NEEDED.

B. Steel Sheet: Commercial-quality, cold-rolled, stretcher-leveled, carbon-steel sheet, complying with the following requirements:

1. Electrolytic Zinc-Coated Steel Sheet: ASTM A 591, with Class C zinc coating; chemically treated in mill with phosphate solution and light chromate rinse.
2. Uncoated Steel Sheet: ASTM A 366, Class I, matte finish.

C. Aluminum Sheet: Not less than the strength and durability properties specified in ASTM B 209 for 5005-H15.

2.2 MISCELLANEOUS MATERIALS

A. Sound-Deadening Insulation: Unfaced, mineral-fiber blanket or batt insulation complying with ASTM C 665 for Type I and passing ASTM E 136 test.

B. Welding Electrodes and Filler Metal: Type and alloy of filler metal and electrodes as recommended by producer of metal to be welded, complying with applicable AWS specifications, and as required for strength and compatibility in the fabricated items.

C. Fasteners: Of same basic metal and alloy as fastened metal, unless otherwise indicated. Do not use metals that are corrosive or incompatible with metals joined.

1. Provide concealed fasteners for interconnection of sheet metal fabrications and for attaching them to other work except where exposed fasteners are unavoidable or are the standard fastening method.
2. Provide Phillips flat-head machine screws for exposed fasteners, unless otherwise indicated.

D. Anchors: For applications not indicated to comply with design loadings, provide anchors of type, size, and material required for type of loading and installation indicated.

BELOW IS AN EXAMPLE ONLY. REVISE TO SUIT INSTALLATION INDICATED.

E. Flexible Cellular Neoprene Gaskets: ASTM D 1056, Type 1, Class A, grade as recommended by gasket manufacturer to obtain airtight seal for application indicated.

F. Bituminous Paint: Cold-applied asphalt mastic complying with SSPC-Paint 12, except containing no asbestos fibers.

G. Joint Sealants for Concealed Joints: Butyl sealant.

2.3 FABRICATION, GENERAL

A. Coordinate dimensions and attachment methods of sheet metal fabrications with those of adjoining products and construction to produce integrated assemblies with closely fitting joints and with edges and surfaces aligned with one another in the relationship indicated.

B. Increase metal thickness or reinforce metal with concealed stiffeners, backing materials, or both, as required to produce surfaces whose variations in flatness do not exceed those permitted by referenced standards for stretcher-leveled metal sheet and to impart sufficient strength for indicated use.

1. Support joints with concealed stiffeners as required to hold exposed faces of adjoining sheets in flush alignment.
2. Fill space between stiffeners with sound-deadening insulation attached to face sheet with cold-applied asphalt mastic.

C. Assemble sheet metal fabrications in the shop to the greatest extent possible to minimize field splicing and assembly.

D. Form sheet metal fabrications to profiles indicated in maximum lengths to minimize joints and without exposed cut edges. Fold back exposed ends of unsupported sheet metal to form a 1/2-inch-wide hem on the concealed side, or ease exposed edges with backing to a radius of approximately 1/32 inch. Produce flat, flush surfaces without cracking or grain separation at bends.

E. Continuously weld joints and seams, except where other methods of joining are indicated. Grind, fill, and dress welds to produce smooth flush exposed surfaces in which welds are not visible after final finishing is completed.

F. Build in straps, plates, and brackets as required for supporting and anchoring fabricated items to adjoining construction. Reinforce sheet metal units as required to attach and support other construction.

2.4 BLIND AND DRAPERY POCKETS

DELETE THIS ARTICLE IF NO BLIND OR DRAPERY POCKETS. REVISE TITLE ABOVE AND TERMS BELOW IF ONLY ONE, BLIND OR DRAPERY POCKET, APPLIES.

A. Form pockets from sheet metal of type and thickness indicated below, with end closures. Coordinate dimensions and attachment methods with blind and drapery equipment, window frames, ceiling suspension system, and other related construction to produce a coordinated, closely fitting assembly.

SELECT 1 REQUIREMENT FROM BELOW, OR REVISE TO SPECIFY ANOTHER METAL OR THICKNESS.

1. Steel sheet, 0.0478 inch.
2. Galvanized-steel sheet, 0.0516 inch.
3. Aluminum sheet, 0.0625 inch.

B. Reinforce pockets for attaching window treatment equipment and hardware, or increase metal thickness.

C. Divide continuous pockets with built-in partitions located to separate adjoining drapery and blind units, coincide with window mullions, and receive filler panels at ends of partitions.

2.5 FILLER PANELS

DELETE THIS ARTICLE IF NO FILLER PANELS, OR IF FILLER PANELS ARE SPECIFIED IN DIVISION 06 SECTION (CLEAR ACRYLIC PLASTIC), OR IN DIVISION 09 SECTION WITH PARTITIONS.

A. Form filler panels for closing ends of partition systems and for other applications indicated from sheet metal of type and thickness indicated. Incorporate reveals, trim, and concealed anchorages for attachment to adjacent surfaces.

SELECT 1 REQUIREMENT FROM BELOW, OR REVISE TO SPECIFY ANOTHER METAL OR THICKNESS.

1. Steel sheet, 0.0598 inch.
2. Galvanized-steel sheet, 0.0635 inch.
3. Aluminum sheet, 0.0625 inch.

B. Adhesively attach gaskets to filler panel edges that abut glass. Use 1-inch-square material, unless otherwise indicated, set approximately 1/4 inch into channeled edge of filler panel.

DELETE ABOVE OR BELOW IF NOT REQUIRED, OR REVISE TO SUIT PROJECT.

C. Attach gaskets to all edges of panels that abut adjacent surfaces to form a continuous seal. Use compressible gaskets or mastic sealing tape, applied to center of panel edges to be concealed from view, unless otherwise indicated.

DELETE BELOW IF NOT REQUIRED.

D. Fill interior of panel with sound-deadening insulation permanently attached to inside panel faces.

2.6 ALUMINUM FINISHES

DELETE THIS ARTICLE IF NO ALUMINUM. RETAIN FINISHES BELOW APPLICABLE TO PROJECT.

A. Finish designations prefixed by AA conform to the system established by the Aluminum Association for designating aluminum finishes.

B. Class I, Clear Anodic Finish: AA-M12C22A41 (Mechanical Finish: nonspecular as fabricated; Chemical Finish: etched, medium matte; Anodic Coating: Architectural Class I, clear coating 0.7 mil or thicker) complying with AAMA 607.1.

C. Class I, Color Anodic Finish: AA-M12C22A42/A44 (Mechanical Finish: nonspecular as fabricated; Chemical Finish: etched, medium matte; Anodic Coating: Architectural Class I, integrally colored or electrolytically deposited color coating 0.7 mil or thicker) complying with AAMA 606.1 or AAMA 608.1.

RETAIN COLOR REQUIREMENT BELOW WITH EITHER CLASS OF COLOR ANODIC FINISH RETAINED ABOVE.

1. Color: Dark bronze.
2. Color: Black.

D. Baked-Enamel Finish: AA-C12C42R1x (Chemical Finish: cleaned with inhibited chemicals; Chemical Finish: acid chromate-fluoride-phosphate conversion coating; Organic Coating: as specified below). Apply baked enamel complying with paint manufacturer's specifications for cleaning, conversion coating, and painting.

1. Organic Coating: Thermosetting, modified-acrylic enamel primer/topcoat system standard with manufacturer, with minimum dry film thickness of 1.5 mils, medium gloss.

RETAIN 1 COLOR REQUIREMENT FROM BELOW.

2. Color: As indicated by manufacturer's standard color designations.
3. Color: Match Architect's samples.
4. Color: As selected by Architect from manufacturer's full range of colors.

2.7 STEEL SHEET FINISHES

DELETE THIS ARTICLE IF NO UNCOATED OR ELECTROLYTIC ZINC-COATED STEEL SHEET.

A. Surface Preparation: Solvent-clean surfaces to comply with SSPC-SP 1 to remove dirt, oil, grease, and other contaminants that could impair paint bond. Remove mill scale and rust, if present, from uncoated steel to comply with SSPC-SP 5 (White Metal Blast Cleaning) or SSPC-SP 8 (Pickling).

B. Pretreatment: Immediately following surface preparation, apply a conversion coating of type suited to organic coating applied over it.

C. Factory Priming for Field-Painted Finish: Apply shop primer specified below immediately following surface preparation and pretreatment.

1. Shop Primer for Ferrous Metal: Fast-curing, lead- and chromate-free, universal modified-alkyd primer complying with performance requirements of FS TT-P-664 selected for good resistance to normal atmospheric corrosion, compatibility with finish paint systems indicated, and capability to provide a sound foundation for field-applied topcoats despite prolonged exposure.

DELETE BELOW IF NO FACTORY-APPLIED BAKED-ENAMEL FINISH FOR STEEL SHEET.

D. Baked-Enamel Finish: Immediately after cleaning and pretreating, apply manufacturer's standard 2-coat, baked-enamel finish consisting of prime coat and thermosetting topcoat. Comply with paint manufacturer's instructions for applying and baking to achieve a minimum dry film thickness of 2.0 mils.

RETAIN 1 COLOR REQUIREMENT FROM BELOW.

1. Color and Gloss: As indicated by manufacturer's standard color and gloss designations.
2. Color and Gloss: Match Architect's sample.
3. Color and Gloss: As selected by Architect from manufacturer's full range of choices for color and gloss.

TO ENSURE OBTAINING EXACT FINISH DESIRED, INSERT PRODUCT AND MFRS' NAMES OF COATING SYSTEM OR SYSTEMS.

PART 3 - EXECUTION

3.1 INSTALLATION

A. Locate and place sheet metal fabrications plumb, level, and in alignment with adjacent construction. Use concealed anchorages where possible. Form tight joints with exposed connections accurately fitted together. Provide reveals and openings for sealants and joint fillers as indicated.

B. Install concealed gaskets, joint fillers, insulation, and flashings as the work progresses to make work soundproof or lightproof as required.

C. Corrosion Protection: Coat concealed surfaces of aluminum, zinc-coated, and nonferrous metals that will be in contact with grout, concrete, masonry, wood, or dissimilar metals, with a heavy coat of bituminous paint.

3.2 ADJUSTING AND PROTECTION

A. Restore finishes damaged during installation and construction period so that no evidence remains of correction work. Return items that cannot be refinished in the field to the shop; make required alterations and refinish entire unit, or provide new units as required.

B. Protect finishes of sheet metal fabrications from damage during construction period. Remove temporary protective coverings at the time of Substantial Completion.

END OF SECTION 055800

UNIVERSITY OF MICHIGAN
ARCHITECTURE, ENGINEERING AND CONSTRUCTION

ARCHITECTURE & ENGINEERING
326 East Hoover, Mail Stop B
Ann Arbor, MI 48109-1002
Phone: 734-764-3414
Fax: 734-936-3334

BuildingName
The Description of the Project
P00000000 0000

SPECIFICATION DIVISION 6

NUMBER SECTION DESCRIPTION

DIVISION 06 WOOD, PLASTICS AND COMPOSITES
SECTION 061000 - ROUGH CARPENTRY

END OF CONTENTS TABLE

DIVISION 06 WOOD, PLASTICS AND COMPOSITES
SECTION 061000 - ROUGH CARPENTRY

JAN, 2005 - UPDATED TO REMOVE ARSENIC- AND CHROMIUM-CONTAINING WOOD PRESERVATIVES AND TO ADD CORROSION-RESISTANT FASTENERS.

PART 1 - GENERAL

1.1 SUMMARY

NOTE THAT ROUGH CARPENTRY REQUIRED FOR INSTALLATION OF ARCHITECTURAL CASEWORK IS USUALLY INCLUDED IN SECTION 064023 - "INTERIOR ARCHITECTURAL WOODWORK."

EDIT BELOW TO SUIT PROJECT

A. Types of work in this section include the following:

1. Wood framing.
2. Wood blocking.
3. Telephone backboard panel.
4. Plywood reinforcement panels within gypsum drywall walls.

B. "Interior Architectural Woodwork" is specified in another Division 06 Section.

DELETE ABOVE IF NO FINISH CARPENTRY. DELETE BELOW IF THIS SECTION DOES NOT INCLUDE REINFORCING OF DRYWALL PARTITIONS

C. Drywall partitions are specified in Division 09 Section "Gypsum Board Assemblies."

1.2 SUBMITTALS

A. Wood treatment data, including instructions for handling, storing, installing, and finishing treated materials, and the following:

1. Certification by treating plant stating type of preservative solution and pressure process used, net amount of preservative retained, and compliance with applicable standards.
2. Statement that moisture content of treated materials was reduced to levels indicated before shipment to Project site.

PART 2 - PRODUCTS

2.1 MATERIALS

A. Lumber Standards: Manufacturer lumber to comply with PS 20 "American Softwood Lumber Standard" and with applicable grading rules of inspection agencies certified by American Lumber Standards Committee's (ALSC) Board of Review.

B. Grade Stamps: Factory-mark each piece of lumber with grade stamp of inspection agency evidencing compliance with grading rule requirements and identifying grading agency, grade, species, moisture content at time of surfacing, and mill.

1. For exposed lumber apply grade stamps to ends or back of each piece, or omit grade stamps entirely and issue certificate of grade compliance from inspection agency in lieu of grade stamp.

C. Nominal sizes are indicated, except as shown by detail dimensions. Provide actual sizes as required by PS 20, for moisture content specified for each use.

1. Provide seasoned lumber with 19 percent moisture content at the time of dressing and shipment, for sizes 2 inches or less in thickness.

DELETE THIS ARTICLE IF NOT APPLICABLE.

D. Preservative Treated Materials: Comply with applicable requirements of AWPA C2 (lumber), except that lumber that is not in contact with the ground and is continuously protected from liquid water may be treated according to AWPA C31 with inorganic boron (SBX) and AWPA C9 (plywood). Mark each treated item with the Quality Mark Requirements of an inspection agency approved by ALSC's Board of Review.

1. Preservative Chemicals shall contain no arsenic or chromium.
2. Treat indicated items and the following:

MODIFY LIST BELOW TO SUIT PROJECT.

a. Wood cants, nailers, curbs, equipment support bases, blocking, stripping, and similar members in connection with roofing, flashing, vapor barriers, and waterproofing.
b. Wood sills, sleepers, blocking, furring, stripping, and similar concealed members in contact with masonry or concrete.
c. Wood framing members less than 18 inches (460 mm) above grade.
d. Wood floor plates installed over concrete slabs directly in contact with earth.

3. Approved Manufacturers: Provide treatment chemicals produced by one of the following:
Arch Wood Protection, Inc.
Baxter: J. H. Baxter Co.
Chemical Specialties, Inc.
Hickson Corp.
Hoover Treated Wood Products, Inc.
Osmose Wood Preserving, Inc.
4. Kiln-dry lumber after treatment to a maximum moisture content of 19 percent.
5. Complete fabrication of treated items before treatment, where possible. If cut after treatment, apply field treatment complying with AWPA M4 to cut surfaces. Inspect each piece of lumber or plywood after drying and discard damaged or defective pieces.

INCLUDE BELOW IF REQUIRED

E. Fire Resistant Treated Lumber and Plywood: Where indicated, provide "Osmose" "Flame Proof LHC" or equal.

DELETE BELOW IF NOT APPLICABLE]

1. Provide fire resistant lumber in each application, unless otherwise indicated.

F. Dimension Lumber: Provide lumber of the following product classification and species indicated:

BELOW FOR LIGHT FRAMING (2" TO 4" THICK, 2" TO 6" WIDE, 10 FEET LONG AND SHORTER). SPECIFY NO. 2 GRADE FOR STRUCTURAL APPLICATIONS

1. Concealed Boards: Standard grade, any species graded under WWPA rules or No. 3 grade Southern Pine graded under SPIB rules.
2. Lumber for Miscellaneous Uses: Standard grade lumber for support of other work, including bucks, nailers, blocking, furring, stripping and similar members.

EDIT BELOW TO SUIT PROJECT

G. Plywood: Provide plywood of APA grade B-C, exterior glue, southern pine veneer for use in concealed locations.

1. Plywood Backing Panels: For mounting electrical equipment, provide fire-retardant treated plywood panels with grade designation APA C-D PLUGGED INT with exterior glue, and in thickness indicated, or if not otherwise indicated, not less than 23/32-inch.
2. Plywood Reinforcing Panels: For concealed installation within drywall partitions, provide fire-retardant treated panels with grade designation APA STRUC I RATED SHEATHING. Provide units of thickness shown, or if not shown, of thickness matching drywall.

H. Fasteners and Anchorages: Provide size, type, material and finish as indicated and as recommended by applicable standards, complying with applicable Federal Specifications for nails, staples, screws, bolts, nuts, washers and anchoring devices. Provide metal hangers and framing anchors of the size and type recommended by the manufacturer for each use including recommended nails.

1. Where rough carpentry work is exposed to weather, in ground contact, or in area of high relative humidity, provide connectors, fasteners and anchorages with a G185 hot-dip zinc coating (ASTM A 153 for fasteners and ASTM A123 for individual connectors).

THE NEWER NON-CCA PRESERVATIVE TREATMENTS HAVE SHOWN EVIDENCE OF INCREASED CORROSIVENESS. FOR FASTENERS USED WITH THIS MATERIAL, USE TYPE 304 STAINLESS STEEL FASTENERS. FOR NON-AMMONIA-CONTAINING PRESERVATIVES WITH A RETENTION LEVEL OF 0.40 PCF OR LESS, HOT-DIP GALVANIZED COATING WITH A MINIMUM THICKNESS OF 185 MILS MAY SUFFICE. THE NEWER NON-CCA PRESERVATIVE TREATMENTS HAVE SHOWN EVIDENCE OF INCREASED CORROSIVENESS. FOR FASTENERS USED WITH THIS MATERIAL, USE

TYPE 304 STAINLESS STEEL FASTENERS. FOR NON-AMMONIA-CONTAINING PRESERVATIVES WITH A RETENTION LEVEL OF 0.40 PCF OR LESS, HOT-DIP GALVANIZED COATING WITH A MINIMUM THICKNESS OF 185 MILS MAY SUFFICE.

FOR LESS SEVERFE CONDITIONS DESCRIBED ABOVE SELECT ABOVE PARAGRAPH AND DELETE PARAGRAPH BELOW.

2. Where rough carpentry work is exposed to weather, in ground contact, or in area of high relative humidity, provide connectors, fasteners and anchorages of Type 304 or Type 316 stainless steel.

I. Insulation: "Dow", "Styrofoam-SM"; 24 inch wide by 2 inch thick boards.

PART 3 - EXECUTION

3.1 INSTALLATION

A. Discard units of material with defects which might impair quality of work, and units which are too small to use in fabricating work with minimum joints or optimum joint arrangement.

B. Set carpentry work to required levels and lines, with members plumb and true to line and cut and fitted.

C. Install rough carpentry work to comply with recommendations of mfr of product involved for use intended. Set carpentry work to required levels and lines, with members plumb and true and cut to fit.

D. Securely attach carpentry work. Install fasteners without splitting wood: fasten panel products to allow for expansion at joints unless otherwise indicated.

1. Countersink nail heads on exposed carpentry work and fill holes.

E. Install plywood backing panels for telephone equipment to substrate as indicated, or if not indicated, with 3/8-inch diameter expansion bolts or toggle bolts spaced 18-inches on center around panel perimeters and on 24-inch centers within panels.

END OF SECTION 061000

UNIVERSITY OF MICHIGAN
ARCHITECTURE, ENGINEERING AND CONSTRUCTION

ARCHITECTURE & ENGINEERING
326 East Hoover, Mail Stop B
Ann Arbor, MI 48109-1002
Phone: 734-764-3414
Fax: 734-936-3334

BuildingName
The Description of the Project
P00000000 0000

SPECIFICATION DIVISION 6

NUMBER SECTION DESCRIPTION

DIVISION 06 WOOD, PLASTICS AND COMPOSITES
SECTION 064023 – INTERIOR ARCHITECTURAL WOODWORK

END OF CONTENTS TABLE

DIVISION 06 WOOD, PLASTICS AND COMPOSITES
SECTION 064023 – INTERIOR ARCHITECTURAL WOODWORK

PART 1 - GENERAL

1.1 SUMMARY

EDIT FOLLOWING LIST TO SUIT PROJECT.

A. Work specified in this Section includes:

Plastic laminate casework.
Hardwood veneer plywood casework.
Plastic laminate counter tops.
Cast plastic counter tops.
Plastic laminate shelving.
Glass shelving.
Acrylic plastic shelving.
Hardwood veneer plywood shelving.
Hardwood door frames.
Hardwood moldings and trim.

B. Related work of other Sections:

DELETE BELOW IF BLOCKING AND NAILERS WILL BE INCLUDED IN THIS SECTION.

1. Blocking, nailers and other carpentry work that is not exposed to view is specified in Section 061000, "Rough Carpentry".

DELETE BELOW IF WOOD WILL BE FACTORY FINISHED.

2. Field finishing of exposed wood is specified in Section 099100, "Painting".

1.2 SUBMITTALS

A. Product Literature: Submit manufacturer's product literature indicating compliance with requirements for each specified hardware item.

B. Shop Drawings: Submit shop drawings showing dimensioned plans and elevations, large scale details, attachment devices and other components for the following:

1. Casework.
2. Counter tops.
3. Shelves.
4. Door frames.
5. Miscellaneous trim.

INCLUDE BELOW WHERE WOOD SAMPLES ARE REQUIRED. MODIFY AS NEEDED.

C. Samples: Submit the following samples for Architect's initial selection:

1. Submit 3 samples of each specified species and cut of hardwood as follows:

a. Submit 2 samples showing extremes of grain and coloration range to be expected; submit 1 sample showing typical piece of wood.

2. Submit 3 flitches of each specified hardwood veneer, not less than 12 inches by 12 inches.

1.3 QUALITY ASSURANCE

A. Standards: Except as otherwise shown or specified, comply with specified provisions of the latest edition of Architectural Woodwork Institute (AWI) "Architectural Woodwork Quality Standards."

1. When an AWI quality grade is not specified, fabricate items in accordance with requirements of AWI "Premium" grade, where applicable.

MODIFY SHOP DRAWING REQUIREMENTS TO SUIT PROJECT.

PART 2 - PRODUCTS

2.1 MATERIALS

MODIFY LIST BELOW TO SUIT ANTICIPATED MATERIAL REQUIREMENTS FOR PROJECT

A. General: Provide materials that comply with requirements of the referenced AWI woodworking standard, and as follows:

1. Hardboard: ANSI/AHA A135.4
2. High Pressure (Plastic) Laminate: NEMA LD 3.
3. Particleboard: ANSI A208.1; Grade M-2.

THE FOLLOWING PRODUCT IS A GREEN SUBSTITUTE FOR PARTICLEBOARD OR PLYWOOD. IT USES WASTE STRAW AND FORMALDEHYDE-FREE RESINS AND EQUALS THE PERFORMANCE OF PARTICLEB0ARD, BUT IS LIGHTER IN WEIGHT. COST MAY BE SLIGHTLY HIGHER.

4. Particleboard: Straw-based particleboard complying with requirements of ANSI A208.1, Grade M-2, except for density.
5. Softwood Plywood: PS 1.
6. Veneered Plywood: HPVA HP-1 Clear, selected for grain and color compatible with exposed solid lumber, no defects.

DELETE BELOW IF NO PLASTIC LAMINATE IN PROJECT.

7. High-Pressure Decorative Laminate: NEMA LD 3, grades as indicated, or if not indicated, as required by indicated woodwork quality standard.

A COLOR/STYLE COULD BE INCLUDED HERE FOR SIMPLE PROJECTS, OR IN SPECIFIC PRODUCT DESCRIPTION FOR MORE DIFFICULT PROJECT, OR ON DRAWINGS FOR VERY COMPLEX PROJECTS.

a. Approved Manufacturers: Subject to compliance with requirements, provide products of one of the following:
   1) Formica Corporation
   2) Laminart.
   3) Nevamar Corp.

4) Ralph Wilson Plastics Co.

DELETE BELOW IF NO CHEMICAL-RESISTANT LAMINATE REQUIRED. FORMICA COMES ONLY IN BLACK BUT HAS HIGHER CHEMICAL RESISTANCE THAN VARIETY OF WILSONART COLORS.

8. Chemical-Resistant, High-Pressure Decorative Laminate: NEMA LD 3, Grade PF-42.

FORMICA AVAILABLE ONLY IN BLACK, BUT HAS BETTER CHEM. RESISTANCE THAN VARIETY OF WILSONART COLORS.

a. Approved Products: Subject to compliance with requirements, provide products of one of the following:
   1) Lab Grade 840 Black; Formica Corporation
   2) Chemsurf; Ralph Wilson Plastics Co.

DELETE BELOW IF NO PLASTIC LAMINATE.

9. Adhesive for Bonding Plastic Laminate: Contact cement; except use urea-formaldehyde for bonding chemical-resistant laminates.

MODIFY BELOW IF ROUGH CARPENTRY WILL CONTAIN THESE REQUIREMENTS.

B. Installation Materials: Provide fire-resistant furring, blocking and hanging strips of softwood or hardwood lumber, kiln dried to less than 15 percent moisture content, and as follows:

1. Screws: Select material, type, size, and finish required for each use. Comply with ASME B18.6.1 for applicable requirements.
2. Nails: Select material, type, size, and finish required for each use. Comply with FS FF-N-105 for applicable requirements.
3. Anchors: Select material, type, size, and finish required for each substate forsecure anchorage. provide nonferous metal or hot-dipped galvanized anchors and inserts on inside face of exterior walls and elsewhere where required for corrosion resistance. Provide toothed steel or lead expansion anchors for drilled-in-place anchors.

2.2 FABRICATION, GENERAL

A. Measures: Before proceeding with fabrication of woodwork required to be fitted to other construction, obtain measurements and verify dimensions and shop drawing details as required for accurate fit.

DELETE BELOW IF NO WOOD OR WOOD VENEERS.

B. Exposed Wood and Veneer Materials: The following are not permitted in surfaces exposed-to-view in finished construction:

1. Knots.
2. Pinhole knots.
3. Surfaces of lighter-than-average color joined with exposed surfaces of darker-than-average color.
4. Adjacent surfaces which are noticeably dissimilar in grain, figure and natural character markings.

DELETE BELOW IF NOT APPLICABLE.

C. Smooth edges of cutouts and, where located in countertops and similar exposures, seal edges on cutouts with a water-resistant coating.

DELETE BELOW IF NO PLASTIC LAMINATE CLAD CASEWORK.

2.3 PLASTIC LAMINATE CLAD CASEWORK

A. Quality Standard: AWI Section 400 and its Division 400B "Laminate Clad Cabinets".

USUALLY SELECT CUSTOM FOR P.LAM. WORK.

1. Grade: Custom.
2. Grade: Premium.
3. AWI Type of Cabinet Construction: Provide cabinet construction of type indicated on drawings, or if not indicated, as follows:

SELECT ONE OF THE FOLLOWING.

a. Type: Flush overlay (door and drawer faces partially cover body members with spaces sufficient for clearance only).
b. Type: Reveal overlay (door and drawer faces cover body members or face frames and create reveals).
c. Type: Exposed face frame (door and drawer faces set flush with face frame).

B. Laminate Cladding: High pressure decorative laminate, with selections of colors, patterns, and finishes made by Architect from laminate manufacturer's full range of standard colors and finishes. Provide laminate cladding complying with the following requirements for type of surface and grade:

1. Horizontal Surfaces Other Than Tops: GP-50 (0.050 inch nominal thickness).
2. Vertical Surfaces: GP-28 (0.028 inch nominal thickness).
3. Edges: GP-28 (0.028 inch nominal thickness).
4. Semiexposed Surfaces: High Pressure Laminate, GP-28.

DELETE BELOW IF DESIRED - NOT REQUIRED BY AWI STANDARD.

C. Provide dust panels of 1/4 inch tempered hardboard above compartments and drawers except where located directly under tops.

DELETE BELOW IF NO TRANSPARENT FINISHED PLYWOOD CASEWORK.

2.4 WOOD CASEWORK

A. Quality Standard: Comply with AWI Section 400 and its Division 400A "Wood Cabinets".

SELECT ONE BELOW: CUSTOM PERMITS GRAIN ON DOORS AND DRAWERS TO RUN IN DIFFERENT DIRECTIONS - PREMIUM REQUIRES GRAIN TO RUN IN SAME DIRECTION.

1. Grade: Custom.
2. Grade: Premium.

B. AWI Type of Cabinet Construction: Provide cabinet construction of type indicated on drawings, or if not indicated, as follows:

SELECT ONE OF THE FOLLOWING.

1. Type: Flush overlay (door and drawer faces partially cover body members with spaces sufficient for clearance only).
2. Type: Reveal overlay (door and drawer faces cover body members or face frames and create reveals).
3. Type: Exposed face frame (door and drawer faces set flush with face frame).

C. Wood Species for Exposed Surfaces: Provide the following species and cut:

USUAL SELECTION IS RED OAK, PLAIN SLICED.

1. Red oak (quercus rubra), plain sliced.
2. Red oak (quercus rubra), rift sawn.
3. Red oak (quercus rubra), quarter sawn.

SELECT ONE OF THE FOLLOWING FOR PREMIUM CASEWORK - DELETE IF NO PREMIUM CASEWORK IS INCLUDED.

4. Grain Matching: Run and match grain vertically for drawer fronts, doors, and fixed panels.
5. Grain Matching: Run and match grain horizontally for drawer fronts, doors, and fixed panels.
6. Grain Matching: As indicated on drawings.

SELECT ONE OF THE FOLLOWING FOR PREMIUM CASEWORK - DELETE IF NO PREMIUM CASEWORK IS INCLUDED. NOTE THAT BOOK MATCH REQUIRES OPPOSING SIDES OF VENEER TO BE EXPOSED - POSSIBLY CREATING "BARBER POLE" EFFECT.

7. Matching of Veneer Leaves: Book match.
8. Matching of Veneer Leaves: Slip match.
9. Matching of Veneer Leaves: Random match.
10. Matching of Veneer Leaves: End match.

SELECT ONE OF THE FOLLOWING FOR PREMIUM CASEWORK - DELETE IF NO PREMIUM CASEWORK IS INCLUDED. CENTER MATCH CAN RESULT IN SIGNIFICANT COST INCREASE.

11. Veneer Matching within Panel Face: Running match.
12. Veneer Matching within Panel Face: Slip match.
13. Veneer Matching within Panel Face: Center match.

D. Wood Species for Semiexposed Surfaces: Match species and cut indicated for exposed surfaces.

RETAIN BELOW IF DESIRED; NOT REQUIRED BY AWI STANDARD.

E. Provide dust panels of 1/4 inch plywood or tempered hardboard above compartments and drawers except where located directly under tops.

DELETE BELOW IF NO LAMINATE CLAD COUNTERTOPS.

2.5 LAMINATE CLAD COUNTERTOPS

A. Quality Standard: Comply with AWI Section 400 and its Division 400C.

1. AWI Grade: Premium.

B. Tops, General: Plastic laminate clad with backing sheet on concealed or semi-concealed surfaces. Provide units with the following features:

1. Edge Treatment: Same laminate cladding as on horizontal surfaces.

USUALLY SELECT ABOVE AND DELETE BELOW EDGE TREATMENT.

2. Edges: Clear anodized aluminum angle fastened with countersunk aluminum screws.
3. Back-Splash (Curb): Applied type, fabricated of materials matching top. Fabricate to dimensions shown, or if not shown, 4 inches high and 3/4-inch thick.
4. Subtop: 45 pound-per-cu. ft. particle board, of thickness shown, or if not shown, 1-1/8-inch.

C. Laminate Cladding for Horizontal Surface: High pressure decorative laminate, with colors, patterns, and finishes selections made by Architect from manufacturer's full range of standard colors and finishes.

1. Grade: GP-50 (0.050 inch nominal thickness).

DELETE BELOW IF NO CAST PLASTIC COUNTERTOPS.

2.6 CAST PLASTIC COUNTERTOPS

A. Type of Top: Solid plastic top, trim and curb of dimensions and configuration shown on drawings, and as follows:

1. Composition: Cast acrylic plastic.
2. Composition: Cast polyester-acrylic resin.
3. Composition: Filled methyl methacrylate.

EITHER SELECT ONE OF ABOVE AND DELETE BELOW, OR DELETE ALL ABOVE AND RETAIN BELOW FOR OPEN SPEC.

4. Composition: Manufacturer's standard formulation of cast plastic materials.

SELECT ONE OF THE FOLLOWING.

5. Edge Treatment: Plain.
6. Edge Treatment: Plain with drip groove on underside of overhang.
7. Edge Treatment: As indicated on drawings.

SELECT ONE OF THE FOLLOWING.

8. Thickness: 1/4-inch.
9. Thickness: 1/2-inch.
10. Thickness: 3/4-inch.
11. Color/Pattern: Solid White.

EDIT ABOVE FOR SPECIFIC SELECTION OR DELETE ABOVE AND RETAIN BELOW.

12. Color/Pattern: To be selected from manufacturer's standard range of solids and patterns.

13. Back-Splash (Curb): Applied type, fabricated of materials matching top. Fabricate to dimensions shown, or if not shown, 4 inches high and 3/4-inch thick.

B. Product: Subject to compliance with requirements, one of the following:

EITHER SELECT ONE OR RETAIN ALL FOR OPEN SPEC.

1. Fountainhead (cast acrylic); Nevamar Corp.
2. Gibralter (cast polyester-acrylic resin); Wilson Art.
3. Corian (filled methyl methacrylate); E.I. DuPont de Nemours and Co.

DELETE BELOW IF NO PLASTIC LAMINATE SHELVING.

2.7 LAMINATE CLAD SHELVING

A. Quality Standard: Comply with AWI Section 400 and its Division 400B.

USUALLY SELECT CUSTOM GRADE BELOW.

1. Grade: Custom.
2. Grade: Premium.

B. Laminate Cladding: High pressure decorative laminate with colors, patterns, and finishes selections made by Architect from laminate manufacturer's full range of standard colors and finishes.

1. Horizontal Surfaces Other Than Tops: GP-50 (0.050 inch nominal thickness).
2. Edges: GP-50 (0.050 inch nominal thickness).

C. Shelving Material: Particle board as follows:

1. Thickness: As shown or, if not shown, 3/4 inch.
2. Width: As shown or, if not shown, 12 inches.

DELETE BELOW IF NO TRANSPARENT FINISHED PLYWOOD SHELVING.

2.8 WOOD SHELVING FOR TRANSPARENT FINISH

A. Quality Standard: Comply with AWI Section 400 and its Division 400A.

1. Grade: Custom.
2. Grade: Premium.

B. Wood Species: Provide plywood shelves with both faces veneered for use in exposed condition, of the following species and cut:

MODIFY TO SUIT PROJECT.

1. Red oak (quercus rubra.

C. Wood Species for Solid Hardwood Edges: Match species and cut indicated for exposed surfaces.

DELETE BELOW IF NO GLASS SHELVING.

2.9 GLASS SHELVING

A. Glass for Shelving: Clear tempered float glass, ASTM C 1048 Condition A (uncoated surfaces), Type I (transparent glass, flat), Class I (clear), Quality q3 (glazing select), Kind FT (fully tempered).

SELECT ONE OF THE FOLLOWING: NOTE THAT NO STANDARD THICKNESS-STRENGTH RELATIONSHIP HAS BEEN DEVELOPED FOR GLASS SHELVES, AND THAT TEMPERED GLASS HAS BEEN KNOWN TO SPONTANEOUSLY SHATTER.

1. Thickness: 1/4 inch.
2. Thickness: 1/2 inch.

GRINDING BELOW PRODUCES GLASS WITH "FROSTED" EDGES. FLAME POLISHING PRODUCES CLEAR, BUT GREEN EDGES.

3. Grind edges smooth.
4. Flame-polish edges.

DELETE BELOW IF NO PLASTIC SHELVING.

2.10 ACRYLIC PLASTIC SHELVING

A. Construct shelves of clear, cast methacrylic plastic to comply with ASTM D 702, and with special scratch and abrasion resistant (SAR) formulation.

DELETE BELOW IF NO SITE-BUILT DOOR FRAMES.

2.11 WOOD DOOR FRAMES

A. Quality Standard: AWI Section 900 and its Division 900B "Interior Door Frames".

1. Grade: Premium.

B. Wood Species for Exposed Surfaces: Plain sawn with narrow heart and without character markings. Panel products are not permitted. Provide wood of the following species:

DELETE OR RETAIN BELOW TO SUIT PROJECT.

1. Transparent Finish: Red oak (quercus rubra).
2. Opaque Finish: Yellow poplar (liriodendron tulipfera), natural hard maple (acer saccharum), or yellow birch (betula alleghaniensis).

2.12 MISCELLANEOUS TRIM

A. Quality Standard: Comply with AWI Section 700.

CUSTOM AND ECONOMY GRADES NOT AVAILABLE.

1. Grade: Premium.

B. Lumber Species: Provide miscellaneous trim for use in exposed condition, of the following species:

DELETE OR RETAIN BELOW TO SUIT PROJECT.

1. Transparent Finish: Red oak (quercus rubra).

2. Opaque Finish: Yellow poplar (liriodendron tulipfera), natural hard maple (acer saccharum), or yellow birch (betula alleghaniensis).

2.13 ACCESSORIES

A. Hardware Schedule: Refer to schedule at end of this section for hardware required for architectural woodwork.

PART 3 - EXECUTION

3.1 INSTALLATION

A. Quality Standard: Install woodwork to comply with AWI Section 1700 for same grade specified in Part 2 of this Section for type of woodwork involved.

B. Install woodwork plumb, level true and straight with no distortions. Shim as required using concealed shims. Install to a tolerance of 1/8 inch in 8 feet for plumb and level (including tops); and with no variations in flushness of adjoining surfaces.

C. Scribe and cut woodwork to fit adjoining work, and refinish cut surfaces or repair damaged finish at cuts.

D. Anchor woodwork as indicated. Secure with countersunk, concealed fasteners and blind nailing as required for a complete installation. Use fine finishing nails for exposed nailing, countersunk and filled flush with woodwork, and matching final finish where transparent finish is indicated.

E. Cabinets: Install without distortion so that doors and drawers fit openings properly and are accurately aligned. Adjust hardware to center doors and drawers in openings and to provide unencumbered operation. Complete the installation of hardware and accessory items as indicated.

F. Tops: Anchor securely to base units and other supporting systems as indicated.

G. Install work plumb, level, true and straight with no distortions. Scribe and cut work to fit adjoining work.

H. Repair or replace damaged and defective woodwork as directed by Architect. Adjust joinery for uniform appearance. Clean woodwork.

3.2 CLEANING, ADJUSTING AND PROTECTION

A. Clean and Prepare for Finishing: Comply with AWI Quality Standards, Section 1500, for preparations for finishing.

B. Clean, lubricate and adjust hardware.

C. Clean woodwork on exposed and semiexposed surfaces. Touch-up shop-applied finishes to restore damaged or soiled areas.

D. Provide final protection and maintain conditions, in a manner acceptable to Fabricator and Installer, which ensures architectural woodwork being without damage or deterioration at time of Substantial Completion.

3.3 HARDWARE SCHEDULE

THE FOLLOWING ARE COMMON SELECTIONS, BUT NOT OFFICE STANDARDS. MODIFY TO SUIT PROJECT.

A. Cabinet Drawers

1. Drawer Slides: Accuride No. 3832 by length required to permit drawer to open to full extension; 1 pair per drawer; or equivalent products of Grant or Stanley.

SELECT ONE OF THE FOLLOWING PULLS OR MODIFY TO SUIT PROJECT.

2. Pulls: Stanley No. 4484 satin anodized aluminum with matching grommets, or equivalent products of EPCO.
3. Pulls: HEWI No. nylon plastic with fasteners concealed by escutcheon.
4. Pulls: Sugatsune America Lamp 2-61/64-inch solid brass oval profile pulls, as follows:
   a. "Oval-80DCR" (dull chrome finish).
   b. "Oval-80SMK" (smoke finish).
   c. "Oval-80PB" (polished brass finish).

B. Cabinet Doors

1. Hinges: Blum "Clip" or "Modul" concealed, screw-attached, 110 deg opening, self-closing hinges, or equivalent products of Grass.
2. Pulls: Stanley No. 4484 satin anodized aluminum with matching grommets.
3. Pulls: HEWI No. nylon plastic with fasteners concealed by escutcheon.
4. Pulls: Sugatsune America Lamp 2-61/64-inch solid brass oval profile pulls, as follows:
   a. "Oval-80DCR" (dull chrome finish).
   b. "Oval-80SMK" (smoke finish).
   c. "Oval-80PB" (polished brass finish).

C. Shelving in Casework

1. Support Standards: Knape-Vogt No. 255ZC recessed, slotted standards, or equivalent products of Stanley.
2. Support Clips: Knape-Vogt No. 256R rubber tipped clips, or equivalent products of Stanley.

D. Wall Mounted Shelving:

1. Support Standards: Knape-Vogt No. 85-185 double slotted standards, or equivalent products of Stanley.
2. Support Brackets: Knape-Vogt No. 185 support brackets, or equivalent products of Stanley.

E. Computer Cable Grommets:

NOTE THAT OTHER SIZES AND CHROME PLATED UNITS ARE ALSO AVAILABLE.

1. Black plastic units 2-1/2-inches in diameter complete with cover plates. Suggested source:
   Baer Supply Company
   Forest Edge Drive
   Vernon Hills, Illinois
   Phone: 1-800-289-2237

F. Sliding-Door Hardware for Wood Cabinet Doors:

1. EPCO No. 821 extruded aluminum bottom track, No. 752 nylon roller assembly, and No. 48A34 extruded aluminum top guide; or equivalent products of Stanley.

END OF SECTION 064023

UNIVERSITY OF MICHIGAN
ARCHITECTURE, ENGINEERING AND CONSTRUCTION

ARCHITECTURE & ENGINEERING
326 East Hoover, Mail Stop B
Ann Arbor, MI 48109-1002
Phone: 734-764-3414
Fax: 734-936-3334

BuildingName
The Description of the Project
P00000000 0000

SPECIFICATION DIVISION 7

NUMBER SECTION DESCRIPTION

DIVISION 07 THERMAL AND MOISTURE PROTECTION
SECTION 075316 – CHLOROSULFONATE-POLYETHYLENE (CSPE) ROOFING

END OF CONTENTS TABLE

DIVISION 07 THERMAL AND MOISTURE PROTECTION
SECTION 075316 – CHLOROSULFONATE-POLYETHYLENE (CSPE) ROOFING

UPDATED 2/1/2002 TO REVISE FM APPLICATION PROCEDURES AND STANDARDS

PART 1 - GENERAL

1.1 SUMMARY

A. This Section includes single-ply membrane roofing system as follows:

1. System Type: Mechanically fastened.
2. Membrane Type: Chlorosulfonated polyethylene (CSPE).

B. Roof insulation related to flexible sheet roofing is specified in this section.

C. Wood nailers, blocking and other related items are specified in this section.

INCLUDE OR DELETE ELEMENTS LISTED BELOW, OR ADD NEW ELEMENTS TO SUIT PROJECT.

D. Removal of existing roofing system is specified in Division 02 Section "Selective Demolition".

E. Concrete for patching work is specified in Division 03 Section "Miscellaneous Cast-In-Place Concrete".

F. Structural steel required for equipment supports and framing members is specified in Division 05 Section "Structural Steel Framing".

G. Steel deck units are specified in Division 05 Section "Steel Decking.

H. Wood sheathing and framing is specified in Division 06 Section "Rough Carpentry".

1.2 SUBMITTALS

A. Comply with submittal requirements indicated in Standard General Conditions, Division 01 Section "Submittal Procedures" and requirements of this Article.

1. Submit product data, test data, samples, and shop drawings not less than 3 weeks prior to beginning roofing work.
2. In addition to Owner's routine submittal process indicated in Standard General Conditions, submit design information and Factory Mutual roof acceptance form simultaneously and directly to Factory Mutual for review and approval at the following address:
   FM Global
   25050 Great Northern Corporate Center, Suite 300
   North Olmsted, OH 44070
   Attn: Ms. Dawn Peger

3. Upon completion of Factory Mutual review the Contractor is responsible for providing the Owner with a copy of the review comments and corresponding actions taken.

B. Product data, installation instructions, and general recommendations from manufacturer of single ply roofing membrane system for type of roofing required. Include data substantiating that materials comply with requirements.

1. For each of the following items, provide manufacturer's name, product name or model number:
   a. Roofing membrane.
   b. Insulation.
   c. Flashing.
   d. Adhesive.
   e. Fasteners and Plates.
   f. Vapor/Air Retarder (if applicable).

USUALLY DELETE THE FOLLOWING, UNLESS UNFAMILIAR MATERIALS ARE SPECIFIED.

C. Samples of finished roofing sheets, including T-shaped side and end-lap seam. Also include the following:

1. Samples of required insulation.

D. Shop drawings showing roof configuration, dimensions, height above grade, sheet layout, seam locations, flashing details, attachment details, membrane color (as applicable), details at perimeter, and special conditions.

1. Indicate insulation fastening rate in the field, at corners, and around perimeter of the roof. Include width of perimeter and corners.
2. Indicate layout of tapered insulation materials.

INCLUDE BELOW WHERE FASTENING THROUGH QUESTIONABLE SUBSTRATES.

E. Test data for pullout resistance of fastening systems.

1.3 QUALITY ASSURANCE

A. Manufacturer: Obtain primary flexible sheet roofing from a single manufacturer. Provide secondary materials as recommended by manufacturer of primary materials.

B. Installer: Engage an Installer to apply single ply membrane roofing who has not less than 3 years experience in application of roofing systems similar to those required for this project. Installer must be acceptable to or licensed by manufacturer of primary roofing material.

1. Work associated with single ply membrane roofing, including (but not limited to) insulation, flashing, and counterflashing, expansion joints, and joint sealers, is to be performed by Installer of this work.

C. Pre-Roofing Conference: One week prior to installation of roofing and associated work, meet at project site, or other mutually agreed location, with Installer, roofing sheet manufacturer, installers of related work, and other entities concerned with roofing performance, including Owner's insurer, test agencies, Owner's Representative, and Architect. Owner's Representative will conduct meeting, record discussions and agreements reached, and furnish a copy of meeting record to each participant.

1. Provide at least 24 hours' advance notice to Owner's Representative prior to performing roofing installation.

D. UL Listing: Provide labeled materials that have been tested and listed by UL in "Building Materials Directory" with "Class A" rated materials and system for roof slopes shown.

SELECT CLASS 1-60 OR 1-90 (OR OTHER CLASSIFICATION) AS APPROPRIATE.

E. Factory Mutual: Provide materials with fuel contribution permitted for FM Class I Rating. Installation shall comply with recommendations of applicable FMRC data sheets and "Approval Guide." Comply with standards for FM Class 1-60 (1-90).

F. Final Inspection: Require a factory representative of the membrane manufacturer to perform a final inspection of the roof installation, and to submit to the Owner a written report, signed by the manufacturer.

1.4 PROJECT CONDITIONS

A. Weather: Proceed with roofing work only when existing and forecasted weather conditions permit work to be performed in accordance with manufacturers' recommendations and warranty requirements.

B. Substrate Conditions: Do not begin roofing installation until substrates have been inspected by Owner's Roofing Department and are determined to be in satisfactory condition.

1.5 WARRANTY

A. Special Project Warranty: Submit two executed copies of single source warranty, signed by manufacturer of roofing membrane, agreeing to replace or repair defective materials and workmanship on the total system, including leakage of water, abnormal aging or deterioration of materials, and other failures of sheet roofing system within warranty period. Repairs and replacements required because of acts of God and other events beyond Contractor's, Installer's, and manufacturer's control (and which exceed performance requirements) shall be completed by Contractor and Installer, and paid for by Owner, at prevailing rates.

1. Warranty Period: 15 years after date of Substantial Completion.

PART 2 - PRODUCTS

2.1 GENERAL

A. Performance: Provide roofing materials recognized to be of generic type indicated and tested to show compliance with indicated performances, or provide other similar materials certified in writing by manufacturer to be equal to, or better than, materials specified in every significant respect and acceptable to Architect.

B. Compatibility: Provide products that are recommended by manufacturers to be fully compatible with indicated substrates, or provide separation materials as required to eliminate contact between incompatible materials.

2.2 CHLOROSULFONATED POLYETHYLENE (CSPE) MEMBRANE

A. General: Hypalon synthetic rubber as produced by E. I. du Pont de Nemours & Co., formed into uniform flexible sheets, complying with the following:

1. Tensile Strength (ASTM D 412): 1000 psi.
2. Ultimate Elongation (ASTM D 412): 350 percent.
3. Brittleness Temperature (ASTM D 746): Minus 40 deg F (minus 40 deg C).
4. Resistance to Heat Aging (ASTM D 573): Retains 100 percent of tensile strength (14 days at 212 deg F/100 deg C).
5. Thickness: 45 mils, minimum.
6. Reinforcing Scrim: Polyester or nylon.
7. Exposed Face Color: White.

B. Mechanically Fastened CSPE Membrane: Manufacturer's standard installation.

C. Manufacturers: Subject to compliance with requirements, provide products of one of the following:

Carlisle SynTec Systems, Carlisle Corporation
Stevens Roofing Systems Div., JPS Elastomerics Corp.

2.3 AUXILIARY MATERIALS

SELECT PERLITE BOARD FOR NEW ROOFS AND TEAR-OFFS. SELECT "RECOVERY" BOARD FOR ROOFING OVER EXISTING ROOFING MATERIALS.

A. Gypsum Board: Fire rated, complying with ASTM C 36, Type X; 5/8 inch thick.

B. "Recovery" Board: Manufacturer's standard board, recommended for application indicated.

C. Sheet Seaming System: Manufacturer's standard materials for sealing lapped joints, including edge sealer to cover exposed spliced edges as recommended by membrane manufacturer.

1. Provide solvent splice wash, splicing primer, splicing cement, night seal, and pourable seal products recommended by the membrane manufacturer and compatible with the materials with which they are is used.

D. Cant Strips Tapered Edge Strips, and Flashing Accessories: Types recommended by membrane manufacturer, including adhesive tapes, flashing cements, and sealants.

E. Nailing Strips and Fasteners: Extruded nailing strips and fasteners recommended by membrane manufacturer.

F. Wood Nailers: Spruce-pine-fir dimensional lumber, preservative treated.

G. Flashing Material: Manufacturer's standard systems compatible with flexible sheet membrane, "Hypalon" coated metal where recommended by manufacturer.

H. Metal Gravel Stop: As recommended by membrane manufacturer for indicated installation.

SELECT ONE OF THE WALKWAY PROTECTION TYPES LISTED BELOW, OR DELETE IF NOT REQUIRED.

I. Walkway Protection: "Hypalon" rubber membrane as approved by the membrane manufacturer. Locate as indicated on drawings.

1. Thickness: Not less than 100 mil.

J. Walkway Protection: Prefabricated concrete pavers designed specifically for ballasting single ply membranes. Provide interlocking units with subsurface drainage channels, weighing approximately 12 psf with minimum 2500-psi compressive strength.

1. Products: Subject to compliance with requirements, provide one of the following:
"Roofcap Paver"; IDR Div. National Concrete Masonry Assoc.
"Roofblock Ballast System"; Roofblok Ltd.

K. Slip Sheet: Type recommended by membrane manufacturer for protecting membrane from incompatible substrates.

L. Protective Coating: Liquid-applied "Hypalon" finish coat for application to exposed membrane, in color selected by Architect from manufacturer's standard colors.

M. Mechanical Fasteners: Metal plates, caps, battens, accessory components, fastening devices, and adhesives to suit substrate and as recommended by manufacturer.

2.4 INSULATING MATERIALS

A. General: Provide insulating materials to comply with requirements indicated for materials and compliance with referenced standards in sizes to fit applications indicated, selected from manufacturer's standard thicknesses, widths, and lengths.

1. Provide tapered boards where indicated for sloping to drain. Fabricate with indicated taper, unless otherwise indicated.

DESIGN FOR SLOPE OF ¼ INCH PER FOOT IF POSSIBLE.

SELECT MAXIMUM POSSIBLE SLOPE PERMITTED BY SITE CONDITIONS.

a. Slope: 1/16 inch per foot.
b. Slope: 1/8 inch per foot.
c. Slope: 1/4 inch per foot.

SELECT ONE OF THE FOLLOWING INSULATION TYPES, OR INCLUDE BOTH AS "CONTRACTOR'S OPTION" - COORDINATE K FACTOR VARIATION OF MATERIALS WITH RESULTING EQUIVALENT THICKNESSES AND SITE CONDITIONS BEFORE SELECTING VALUES.

B. Extruded Polystyrene Board Insulation: Rigid, cellular thermal insulation with closed cells and integral high-density skin, complying with ASTM C 578 for Type IV and as follows:

1. Compressive Strength: 25-psf min. per ASTM D 1621.
2. 5-Year Aged k Factor: 0.20 at 75 deg F, and 0.185 deg F per ASTM C 518-76.
3. Surface Burning Characteristics: Maximum flame spread and smoke developed values of 5 and 165, respectively.

REVISE THICKNESS VALUE INDICATED BELOW. USUALLY KEEP MINIMUM THICKNESS OF 1-1/2 INCHES, UNLESS NOT PERMITTED BY SITE CONDITIONS.

4. Thickness: 1-1/2 inch, exclusive of tapered insulation course.
5. Product: Provide units recommended and approved by membrane manufacturer, with aged R-value equal to Dow Chemical Co. "Styrofoam SM or TG".

C. Polyisocyanurate Board Roof Insulation: Rigid cellular thermal insulation with polyisocyanurate closed-cell foam core and manufacturer's standard matt facing laminated to both sides; complying with FS HH-I-1972/2, Class 1.

REVISE THICKNESS VALUE INDICATED BELOW. USUALLY KEEP MINIMUM THICKNESS OF 1-1/2 INCHES, UNLESS NOT PERMITTED BY SITE CONDITIONS.

1. Minimum Compressive Strength: 25 psi.
2. Thickness: 1-1/2 inch, exclusive of tapered insulation course.
3. Product: Provide units recommended and approved by membrane manufacturer, with aged R-value equal to Celotex Corp. "Energy-Lok".

2.5 AUXILIARY INSULATION MATERIALS

A. Adhesive for Bonding Insulation: Where required, type recommended by insulation manufacturer, approved by the membrane manufacturer and complying with fire resistance requirements.

B. Mastic Sealer: Type recommended by insulation manufacturer for bonding edge joints and filling voids, if required.

C. Mechanical Anchors: Corrosion-resistant type as recommended by membrane manufacturer for deck type and complying with fire and insurance uplift rating requirements.

SELECT ONE OF THE FOLLOWING THREE.

1. Fasten insulation into concrete decks.
2. Fasten insulation through metal decks.
3. Fasten insulation through wood decks.

ALWAYS INCLUDE BELOW.

4. Provide system tested and approved for the following Factory Mutual wind uplift rating:

SELECT ONE OF THE FOLLOWING BASED ON FM RECOMMENDATIONS.

PART 3 - EXECUTION

3.1 PREPARATION OF SUBSTRATE

A. General: Comply with manufacturer's instructions for preparation of substrate to receive single ply membrane system.

1. Verify that penetrations, expansion joints, and blocking are placed and secured and that roof drains are properly clamped into position.

B. Clean substrate of dust debris, and other substances detrimental to single ply roofing system work. Remove sharp projections.

C. Install flashings and accessory items as shown, and as recommended by manufacturer if not shown.

3.2 INSPECTION OF SUBSTRATE

A. Inspection: Inspect substrate and conditions under which roofing work is to be performed in presence of Installer. Notify Owner in writing of unsatisfactory conditions. Do not proceed with roofing work until unsatisfactory conditions have been corrected in manner acceptable to Installer.

3.3 INSULATION INSTALLATION

REVISE THE FOLLOWING PARAGRAPH TO SELECT EITHER ONE OR MULTIPLE LAYERS. AS WRITTEN, PARAGRAPH GIVES CONTRACTOR THE OPTION TO DO EITHER.

A. General: Extend insulation full thickness in one layer, or in multiple layers over entire surface to be insulated, cutting and fitting tightly around obstructions. Form cant strips, crickets, saddles, and tapered areas with additional material as shown and as required for proper drainage of membrane.

1. Stagger joints in one direction for each course. For multiple layers, stagger joints in both directions between courses with no gaps, to form a complete thermal envelope. Use the largest sheets possible as determined by job conditions to minimize the amount of joints.

INCLUDE THE FOLLOWING IF VAPOR BARRIER IS INCLUDED.

2. Install vapor barrier under insulation. Lap edges min. 3 inches and tape seams.

B. Do not install more insulation each day than can be covered with membrane before the end of day or before start of inclement weather. Insulation shall be clean and dry when installed.

C. Secure roof insulation to substrate with mechanical anchors of type and spacing recommended by manufacturer, but in no case provide less than required by the latest version of FM "Loss Prevention Data Sheet 1-29," including perimeter and corner enhancements.

1. Tar Kettle/Pots are required to be equipped with fume recovery system.

3.4 MEMBRANE INSTALLATION

A. General: If required for warranty, start installation only in presence of manufacturers technical representative. Use only installation techniques and details acceptable to the membrane manufacturer and that qualify installation for required warranty.

1. Cut out and repair membrane defects at end of each day's work.

B. Mechanically Fastened Membrane: Install membrane by unrolling over prepared substrate, lapping adjoining sheets as recommended by manufacturer, and bonding and sealing seams Install mechanical fasteners at spacing recommended by manufacturer, covering with adhesive-applied membrane so that no fastenings are exposed. Install flashings and counterflashings, as shown or recommended by manufacturer.

1. Splicing: Splice in accordance with the manufacturer's recommendations. Clean membrane and counterflashing splices with a solvent wash and prime with splicing primer prior to application of adhesive.
2. Perimeter Nailing: Mechanically fasten nailing strips through the membrane and into the roof deck. Seal with flashing at the perimeter, curb flashing, expansion joints, and obstructions. Provide 6 inch wide separations where water flow is interrupted.
3. Flashing: Use longest pieces possible for perimeter flashing and flashing around penetrations, mechanical systems, and similar obstructions. Fabricate flashings and terminations in accordance with standard details. Flash items passing through the membrane. Flash pipes with molded pipe flashing. Where installation of molded pipe flashing is not possible, install field fabricated pipe seals. Do not allow flashing to bridge any change in direction.
4. Clusters of Pipes: Seal unusual shaped penetrations using pitch pocket type seal as shown in manufacturer's standard details.
5. Expansion Joints: Comply with roof manufacturer's recommendations.
6. Daily Seal: Exercise care to ensure that the water does not flow beneath any completed sections of roof. Temporarily seal loose edge of membrane according to manufacturer's recommendations at the end of each working day provide edge weighting. When work is resumed, pull sheet free before continuing installation. Provide seals to existing deck and to existing roofing to prevent water bypass into new roofing system.

7. Laps: No buck water laps are permitted, and no field seams within 3 feet of a roof sump will be allowed.

SELECT ONE OF THE FOLLOWING TO SUIT PROJECT, OR DELETE BOTH IF NO WALKWAY PROTECTION INCLUDED.

C. Walkway Protection: Adhere "Hypalon" walkway membrane to roof membrane in accordance with manufacturer's written instructions.

D. Walkway Protection: Install paver units at locations shown and where required for access to roof-mounted equipment. Place protection boards carefully to avoid damage to roofing system.

3.5 PROTECTION OF ROOFING

A. Upon completion of roofing (including associated work),institute appropriate procedures for surveillance and protection of roofing during remainder of construction period. At end of construction period, or at time when remaining construction will in no way affect or endanger roofing, make a final inspection of roofing and prepare a written report to Owner, describing nature and extent of deterioration or damage found.

B. Repair or replace deteriorated or defective work found at time of final inspection, as required to provide a condition free of damage and deterioration at time of Substantial Completion and in accordance with requirements of specified warranty.

END OF SECTION 075316

UNIVERSITY OF MICHIGAN
ARCHITECTURE, ENGINEERING AND CONSTRUCTION

ARCHITECTURE & ENGINEERING
326 East Hoover, Mail Stop B
Ann Arbor, MI 48109-1002
Phone: 734-764-3414
Fax: 734-936-3334

BuildingName
The Description of the Project
P00000000 0000

SPECIFICATION DIVISION 7

NUMBER SECTION DESCRIPTION

DIVISION 07 THERMAL AND MOISTURE PROTECTION
SECTION 075323 – ETHYLENE-PROPYLENE-DIENE-MONOMER (EPDM) ROOFING

END OF CONTENTS TABLE

DIVISION 07 THERMAL AND MOISTURE PROTECTION
SECTION 075323 – ETHYLENE-PROPYLENE-DIENE-MONOMER (EPDM) ROOFING

UPDATED 2/1/2002 TO REVISE FM APPLICATION PROCEDURES AND STANDARDS

PART 1 - GENERAL

1.1 SUMMARY

A. This Section includes single-ply membrane roofing system as follows:

1. System Type: Fully adhered.
2. Membrane Type: Ethylene propylene diene monomer (EPDM).

B. Roof insulation related to flexible sheet roofing is specified in this section.

C. Wood nailers, blocking and other related items are specified in this Section.

INCLUDE OR DELETE ELEMENTS LISTED BELOW, OR ADD NEW ELEMENTS TO SUIT PROJECT.

D. Removal of existing roofing system is specified in Division 02 Section "Selective Demolition".

E. Concrete for patching work is specified in Division 03 Section "Miscellaneous Cast-In-Place Concrete".

F. Structural steel required for equipment supports and framing members is specified in Division 05 Section "Structural Steel Framing".

G. Steel deck units are specified in Division 05 Section "Steel Decking.

H. Wood sheathing and framing is specified in Division 06 Section "Rough Carpentry".

1.2 SUBMITTALS

A. Comply with submittal requirements indicated in Standard General Conditions, Division 01 Section "Submittals," and requirements of this Article.

1. Submit product data, test data, samples, shop drawings and Factory Mutual roof acceptance form not less than 3 weeks prior to beginning roofing work.
2. In addition to Owner's routine submittal process indicated in Standard General Conditions, submit design information and Factory Mutual roof acceptance form simultaneously and directly to Factory Mutual for review and approval at the following address:
   FM Global
   25050 Great Northern Corporate Center, Suite 300
   North Olmsted, OH 44070
   Attn: Ms. Dawn Peger

3. Upon completion of Factory Mutual review the Contractor is responsible for providing the Owner with a copy of the review comments and corresponding actions taken.

B. Product data, installation instructions, and general recommendations from manufacturer of single ply roofing membrane system for type of roofing required. Include data substantiating that materials comply with requirements.

1. For each of the following items, provide manufacturer's name, product name or model number:
   a. Roofing membrane.
   b. Insulation.
   c. Flashing.
   d. Adhesive.
   e. Fasteners and Plates.
   f. Vapor/Air Retarder (if applicable).

USUALLY DELETE THE FOLLOWING, UNLESS UNFAMILIAR MATERIALS ARE SPECIFIED.

C. Samples of finished roofing sheets, including T-shaped side and end-lap seam. Also include samples of required insulation.

D. Shop drawings showing roof configuration, dimensions, height above grade, sheet layout, seam locations, flashing details, attachment details, membrane color (as applicable), details at perimeter, and special conditions.

1. Indicate insulation fastening rate in the field, at corners, and around perimeter of the roof. Include width of perimeter and corners.
2. Indicate layout of tapered insulation materials.

INCLUDE BELOW WHERE FASTENING THROUGH QUESTIONABLE SUBSTRATES.

E. Test data for pullout resistance of fastening systems.

1.3 QUALITY ASSURANCE

A. Manufacturer: Obtain primary flexible sheet roofing from a single manufacturer. Provide secondary materials as recommended by manufacturer of primary materials.

B. Installer: Engage an Installer to apply single ply membrane roofing who has not less than 3 years experience in application of roofing systems similar to those required for this project. Installer must be acceptable to or licensed by manufacturer of primary roofing material.

1. Work associated with single ply membrane roofing, including (but not limited to) insulation, flashing, and counterflashing, expansion joints, and joint sealers, is to be performed by Installer of this Work.

C. Pre-Roofing Conference: One week prior to installation of roofing and associated work, meet at project site, or other mutually agreed location, with Installer, roofing sheet manufacturer, installers of related work, and other entities concerned with roofing performance, including Owner's insurer, test agencies, Owner's Representative, and Architect. Owner's Representative will conduct meeting, record discussions and agreements reached, and furnish a copy of meeting record to each participant.

1. Provide at least 24 hours' advance notice to Owner's Representative prior to performing roofing installation.

D. UL Listing: Provide labeled materials that have been tested and listed by UL in "Building Materials Directory" with "Class A" rated materials and system for roof slopes shown.

SELECT CLASS 1-60 OR 1-90 (OR OTHER CLASSIFICATION) AS APPROPRIATE.

E. Factory Mutual: Provide materials with fuel contribution permitted for FM Class 1 Rating. Installation shall comply with recommendations of applicable FMRC data sheets, and "Approval Guide." Comply with standards for FM Class 1-60 (1-90).

F. Final Inspection: Require a factory representative of the membrane manufacturer to perform a final inspection of the roof installation, and to submit to the Owner a written report, signed by the manufacturer.

1.4 PROJECT CONDITIONS

A. Weather: Proceed with roofing work only when existing and forecasted weather conditions permit work to be performed in accordance with manufacturers' recommendations and warranty requirements.

B. Substrate Conditions: Do not begin roofing installation until substrates have been inspected by Owner's Roofing Department and are determined to be in satisfactory condition.

1.5 WARRANTY

A. Special Project Warranty: Submit two executed copies of single source warranty, signed by manufacturer of roofing membrane, agreeing to replace or repair defective materials and workmanship on the total system, including leakage of water, abnormal aging or deterioration of materials, and other failures of sheet roofing system within warranty period. Repairs and replacements required because of acts of God and other events beyond Contractor's, Installer's, and Manufacturer's control (and which exceed performance requirements) shall be completed by Contractor and Installer, and paid for by Owner, at prevailing rates.

1. Warranty Period: 15 years after date of Substantial Completion.

PART 2 - PRODUCTS

2.1 GENERAL

A. Performance: Provide roofing materials recognized to be of generic type indicated and tested to show compliance with indicated performances, or provide other similar materials certified in writing by manufacturer to be equal to, or better than, materials specified in every significant respect and acceptable to Architect.

B. Compatibility: Provide products that are recommended by manufacturers to be fully compatible with indicated substrates, or provide separation materials as required to eliminate contact between incompatible materials.

2.2 EPDM MEMBRANE

A. General: Ethylene propylene diene monomers formed into uniform, flexible sheets, complying with ASTM D 4637, Type 1.

1. Class U: Unreinforced.
2. Thickness: 60 mils, nominal.
3. Exposed Face Color: Black.

B. Fully Adhered EPDM Membrane: Manufacturer's standard installation.

C. Manufacturers: Subject to compliance with requirements, provide products of one of the following:

Carlisle SynTec Systems, Carlisle Corporation
Firestone RubberGard Roofing Systems, Firestone Building Products Co.
Genflex Roofing Systems, Building Systems Div., GenCorp Polymer Products
Johns Manville Corp.
Versigard Roofing Systems, Versico Incorporated

2.3 AUXILIARY MATERIALS

SELECT PERLITE BOARD FOR NEW ROOFS AND TEAR-OFFS. SELECT "RECOVERY" BOARD FOR ROOFING OVER EXISTING ROOFING MATERIALS.

A. Gypsum board: Fire rated, complying with ASTM C 36, Type X; 5/8 inch thick.

B. "Recovery" Board: Manufacturer's standard board, recommended for application indicated.

INCLUDE THE FOLLOWING WHERE IT HAS BEEN DETERMINED THAT DEW POINT WILL OCCUR BENEATH MEMRANE.

C. Provide 4 mil thick polyethylene sheet vapor-proof membrane.

D. Sheet Seaming System: Manufacturer's standard materials for sealing lapped joints, including edge sealer to cover exposed spliced edges as recommended by membrane manufacturer.

1. Provide solvent splice wash, splicing primer, splicing cement, night seal, and pourable seal products recommended by the membrane manufacturer and compatible with the materials with which they are used.

E. Cant Strips Tapered Edge Strips, and Flashing Accessories: Types recommended by membrane manufacturer, including adhesive tapes, flashing cements, and sealants.

F. Nailing Strips and Fasteners: Extruded nailing strips and fasteners recommended by membrane manufacturer.

G. Wood Nailers: Spruce-pine-fir dimensional lumber, preservative treated.

H. Flashing Material: Manufacturer's standard systems compatible with flexible sheet membrane, including molded pipe flashing and uncured neoprene flashing.

1. Provide uncured neoprene flashing material not less than 60 mils thick. Minimize use of uncured neoprene to greatest extent possible.

I. Metal Gravel Stop: As recommended by membrane manufacturer for indicated installation.

J. Walkway Protection: EPDM rubber pads as approved by the membrane manufacturer. Locate as indicated on drawings.

1. Thickness: Not less than 100 mil.

K. Slip Sheet: Type recommended by membrane manufacturer for protecting membrane from incompatible substrates.

L. Membrane Adhesive: As recommended by membrane manufacturer for particular substrate and project conditions, formulated to withstand min. 90-psf uplift force.

2.4 INSULATING MATERIALS

A. General: Provide insulating materials to comply with requirements indicated for materials and compliance with referenced standards in sizes to fit applications indicated, selected from manufacturer's standard thicknesses, widths, and lengths.

1. Provide tapered boards where indicated for sloping to drain. Fabricate with indicated taper, unless otherwise indicated.

DESIGN FOR SLOPE OF ¼ INCH PER FOOT IF POSSIBLE.

SELECT MAXIMUM POSSIBLE SLOPE PERMITTED BY SITE CONDITIONS.

a. Slope: 1/16 inch per foot.
b. Slope: 1/8 inch per foot.
c. Slope: 1/4 inch per foot.

B. Polyisocyanurate Board Roof Insulation: Rigid cellular thermal insulation with polyisocyanurate closed-cell foam core and manufacturer's standard matt facing laminated to both sides; complying with FS HH-I-1972/2, Class 1.

REVISE THICKNESS VALUE INDICATED BELOW. USUALLY KEEP MINIMUM THICKNESS OF 1-1/2 INCHES, UNLESS NOT PERMITTED BY SITE CONDITIONS.

1. Thickness: 1-1/2 inch, exclusive of tapered insulation course.
2. Provide material with a minimum compressive strength of 25 psi.
3. Manufacturer/Product: Provide units recommended and approved by membrane manufacturer, with aged R-value equal to Celotex Corp. "Energy-Lok".

2.5 AUXILIARY INSULATION MATERIALS

A. Adhesive for Bonding Insulation: Where required, type recommended by insulation manufacturer, approved by the membrane manufacturer and complying with fire resistance requirements.

B. Mastic Sealer: Type recommended by insulation manufacturer for bonding edge joints and filling voids, if required.

C. Mechanical Anchors: Corrosion-resistant type as recommended by membrane manufacturer for deck type and complying with fire and insurance uplift rating requirements.

SELECT ONE OF THE FOLLOWING THREE.

1. Fasten insulation into concrete decks.
2. Fasten insulation through metal decks.
3. Fasten insulation through wood decks.

ALWAYS INCLUDE BELOW.

4. Provide system tested and approved for the following Factory Mutual wind uplift rating:

SELECT ONE OF THE FOLLOWING BASED ON FM RECOMMENDATIONS.

PART 3 - EXECUTION

3.1 PREPARATION OF SUBSTRATE

A. General: Comply with manufacturer's instructions for preparation of substrate to receive single ply membrane system.

1. Verify that penetrations, expansion joints, and blocking are placed and secured and that roof drains are properly clamped into position.

B. Clean substrate of dust debris, and other substances detrimental to single ply roofing system work. Remove sharp projections.

C. Install flashings and accessory items as shown, and as recommended by manufacturer if not shown.

3.2 INSPECTION OF SUBSTRATE

A. Inspection: Inspect substrate and conditions under which roofing work is to be performed in presence of Installer. Notify Owner in writing of unsatisfactory conditions. Do not proceed with roofing work until unsatisfactory conditions have been corrected in manner acceptable to Installer.

3.3 INSULATION INSTALLATION

REVISE THE FOLLOWING PARAGRAPH TO SELECT EITHER ONE OR MULTIPLE LAYERS. AS WRITTEN, PARAGRAPH GIVES CONTRACTOR THE OPTION TO DO EITHER.

A. General: Extend insulation full thickness in one layer, or in multiple layers over entire surface to be insulated, cutting and fitting tightly around obstructions. Form cant strips, crickets, saddles, and tapered areas with additional material as shown and as required for proper drainage of membrane.

1. Stagger joints in one direction for each course. For multiple layers, stagger joints in both directions between courses with no gaps, to form a complete thermal envelope. Use the largest sheets possible as determined by job conditions to minimize the amount of joints.

INCLUDE THE FOLLOWING IF VAPOR BARRIER IS INCLUDED.

2. Install vapor barrier under insulation. Lap edges min. 3 inches and tape seams.

B. Do not install more insulation each day than can be covered with membrane before the end of day or before start of inclement weather. Insulation shall be clean and dry when installed.

C. Secure roof insulation to substrate with mechanical anchors of type and spacing recommended by manufacturer, but in no case provide less than required by the latest version of FM "Loss Prevention Data Sheet 1-29," including perimeter and corner enhancements.

1. Tar Kettle/Pots are required to be equipped with fume recovery system.

3.4 MEMBRANE INSTALLATION

A. General: If required for warranty, start installation only in presence of manufacturers technical representative. Use only installation techniques and details acceptable to the membrane manufacturer and that qualify installation for required warranty.

1. Cut out and repair membrane defects at end of each day's work.

B. Fully Adhered Membrane: Install membrane by rolling over prepared substrate, lapping adjoining sheets as recommended by manufacturer. Apply adhesive to surfaces to be bonded and roll into place when adhesive has properly cured; roll out spray-applied adhesive to ensure even coverage. Treat seams with special cement and apply sealant to exposed sheet edges, tapering application as recommended by manufacturer. Install flashings and counterflashings, and accessories at locations and as recommended by manufacturer.

1. Splicing: Splice in accordance with the manufacturer's recommendations. Clean membrane and counterflashing splices with a solvent wash and prime with splicing primer prior to application of adhesive.
2. Perimeter Nailing: Mechanically fasten nailing strips through the membrane and into the roof deck. Seal with flashing at the perimeter, curb flashing, expansion joints, and obstructions. Provide 6 inch wide separations where water flow is interrupted.
3. Flashing: Use longest pieces possible for perimeter flashing and flashing around penetrations, mechanical systems, and similar obstructions. Fabricate flashings and terminations in accordance with standard details. Flash items passing through the membrane. Flash pipes with molded pipe flashing. Where installation of molded pipe flashing is not possible, install field fabricated pipe seals. Do not allow flashing to bridge any change in direction.
4. Clusters of Pipes: Seal unusual shaped penetrations using pitch pocket type seal as shown in manufacturer's standard details.
5. Expansion Joints: Comply with roof manufacturer's recommendations.
6. Daily Seal: Exercise care to ensure that the water does not flow beneath any completed sections of roof. Temporarily seal loose edge of membrane according to manufacturer's recommendations at the end of each working day, and provide edge weighting. When work is resumed, pull sheet free before continuing installation. Provide seals to existing deck and to existing roofing to prevent water bypass into new roofing system.
7. Laps: No buck water laps are permitted, and no field seams within 3 feet of a roof sump will be allowed.

C. Walkway Protection: Install EPDM rubber pads at locations shown and where required for access to roof-mounted equipment. Install in accordance with manufacturer's recommendations.

3.5 CLEANING

A. Remove excess materials, packaging, and other debris from roof surface upon completion of work. Hose down roofing surfaces to remove remaining dust and dirt.

3.6 PROTECTION OF ROOFING

A. Upon completion of roofing (including associated work), institute appropriate procedures for surveillance and protection of roofing during remainder of construction period. At end of construction period, or at time when remaining construction will in no way affect or endanger roofing, make a final inspection of roofing and prepare a written report to Owner, describing nature and extent of deterioration or damage found.

B. Repair or replace deteriorated or defective work found at time of final inspection, as required to provide a condition free of damage and deterioration at time of Substantial Completion and in accordance with requirements of specified warranty.

END OF SECTION 075323

UNIVERSITY OF MICHIGAN
ARCHITECTURE, ENGINEERING AND CONSTRUCTION

ARCHITECTURE & ENGINEERING
326 East Hoover, Mail Stop B
Ann Arbor, MI 48109-1002
Phone: 734-764-3414
Fax: 734-936-3334

BuildingName
The Description of the Project
P00000000 0000

SPECIFICATION DIVISION 7

NUMBER SECTION DESCRIPTION

DIVISION 07 THERMAL AND MOISTURE PROTECTION
SECTION 078413 – PENETRATION FIRESTOPPING

END OF CONTENTS TABLE

DIVISION 07 THERMAL AND MOISTURE PROTECTION
SECTION 078413 – PENETRATION FIRESTOPPING

THIS NEW SECTION REPLACES THE BRIEF DESCRIPTION OF FIRE-STOPPING WHICH WAS FORMERLY INCLUDED IN SECTION 079200 JOINT SEALANTS. INCLUDE THIS SECTION FOR ALL PROJECTS WHERE PIPING, DUCTWORK OR ELECTRICAL CONDUIT IS BEING MODIFIED OR INSTALLED OR WHERE IMPROPERLY INSTALLED CONCEALED OR EXPOSED PENETRATIONS ARE BEING REPAIRED. EXISTING CONDITIONS SHOULD BE SURVEYED AT THE BEGINNING OF A PROJECT, AND INADEQUACIES (I.E., UNPROTECTED OPENINGS IN WALLS AND FLOORS, IMPROPER PENETRATIONS, ETC.) SHOULD BE IDENTIFIED AND CORRECTED WHENEVER FUNDING CAN BE OBTAINED FOR THIS PURPOSE.

1.1 SUMMARY

A. This Section includes through-penetration firestop systems for penetrations through fire-resistance-rated constructions, including both empty openings and openings containing penetrating items.

ALWAYS INCLUDE THE FOLLOWING WHEN THERE ARE MECHANICAL AND ELECTRICAL PENETRATIONS.

SLEEVES ARE RECOMMENDED FOR FLOOR PENETRATIONS TO PROTECT CONTENTS ON THE FLOOR BELOW THE PENETRATION FROM LEAKAGE OR FLOODING CAUSED BY PIPE BREAKS, SPRINKLER DISCHARGE, ETC. EVALUATE LEVEL OF PROTECTION DESIRED BY OWNER AND THE LIKELIHOOD OF WATER DAMAGE IN CONSULTATION WITH MECHANICAL ENGINEER. SLEEVES ARE TYPICALLY SHOWN ON MECHANICAL AND ELECTRICAL DRAWINGS SINCE THEY ARE USUALLY THE RESPONSIBILITY OF THE CONTRACTOR MAKING THE PENETRATION. ALTHOUGH THE SLEEVE ITSELF IS NOT PART OF THE FIRESTOP SYSTEM, IT MAY AFFECT WHICH FIRESTOPPING SYSTEM IS SELECTED, SINCE THE ENTIRE ASSEMBLY MUST BE TESTED AND NOT ALL SYSTEMS HAVE BEEN TESTED WITH SLEEVES.

B. Related Sections include the following:

1. Division 21, 22 and 23 Sections specifying duct and piping penetrations.
2. Division 26, 27 and 28 Sections specifying cable and conduit penetrations.

1.2 REFERENCES

A. ASTM E 84 Test Method for Surface Burning Characteristics of Building Materials.

B. ASTM E 119 Test Method for Fire Test of Building Construction and Materials.

C. ASTM E 814 Fire Tests of Through-Penetration Fire Stops.

D. Firestop Contractors International Association (F.C.I.A.) Manual of Practice (M.O.P.).

1.3 PERFORMANCE REQUIREMENTS

A. General: For penetrations through fire-resistance-rated constructions, including both empty openings and openings containing penetrating items, provide through-penetration firestop systems that are produced and installed to resist spread of fire according to requirements indicated, resist passage of smoke and other gases, and maintain original fire-resistance rating of construction penetrated.

1. For through-penetration firestop systems in non-rated walls, a fire-resistance rating shall not be required.

B. Rated Systems: Provide through-penetration firestop systems with the following ratings determined per ASTM E 814:

1. F-Rated Systems: Provide through-penetration firestop systems with F-ratings indicated, but not less than that equaling or exceeding fire-resistance rating of constructions penetrated.

AS A GENERAL RULE, T-RATED SYSTEMS ARE REQUIRED WHERE PENETRATING ITEMS PASS THROUGH OCCUPIABLE AREAS WHERE THEY MAY CONTACT COMBUSTIBLE MATERIALS. DELETE PARAGRAPHS BELOW IF T-RATED SYSTEMS ARE NOT REQUIRED.

2. T-Rated Systems: For the following conditions, provide through-penetration firestop systems with T-ratings indicated, as well as F-ratings, where systems protect penetrating items exposed to potential contact with adjacent materials in occupiable floor areas:
   a. Penetrations located outside wall cavities.
   b. Penetrations located outside fire-resistance-rated shaft enclosures.

C. For through-penetration firestop systems exposed to view, traffic, moisture, and physical damage, provide products that, after curing, do not deteriorate when exposed to these conditions both during and after construction.

THREE SUBPARAGRAPHS BELOW ARE EXAMPLES OF SPECIAL REQUIREMENTS. DELETE THOSE NOT APPLICABLE; INSERT OTHERS TO SUIT PROJECT.

1. For piping penetrations for plumbing and wet-pipe sprinkler systems, provide moisture-resistant through-penetration firestop systems.
2. For floor penetrations with annular spaces exceeding 4 inches (100 mm) in width and exposed to possible loading and traffic, provide firestop systems capable of supporting floor loads involved, either by installing floor plates or by other means.
3. For penetrations involving insulated piping, provide through-penetration firestop systems not requiring removal of insulation.

DELETE PARAGRAPH BELOW IF NOT APPLICABLE. VERIFY THAT THROUGH-PENETRATION FIRESTOP SYSTEMS SELECTED USE A FILL MATERIAL THAT COMPLIES WITH THE REQUIREMENT BELOW.

D. For through-penetration firestop systems exposed to view, provide products with flame-spread and smoke-developed indexes of less than 25 and 450, respectively, as determined per ASTM E 84.

1.4 SUBMITTALS

A. Product Data: For each type of product indicated.

B. Shop Drawings: For each through-penetration firestop system, submit documentation, including illustrations, from a qualified testing and inspecting agency, showing each type of construction condition penetrated, relationships to adjoining construction, and type of penetrating item.

C. Product Test Reports: From a qualified testing agency indicating through-penetration firestop system complies with requirements, based on comprehensive testing of current products.

1.5 QUALITY ASSURANCE

A. Fire-Test-Response Characteristics: Provide through-penetration firestop systems that comply with the following requirements and those specified in Part 1 "Performance Requirements" Article:

1. Firestopping tests shall be performed by Underwriters Laboratories (UL), Omega Point Laboratories or Intertek Warnock/Hersey.
2. Through-penetration firestop systems are identical to those tested per testing standard referenced in "Part 1 Performance Requirements" Article. Provide rated systems bearing testing agency's classification marking.

B. Coordinate construction of openings and penetrating items to ensure that through-penetration firestop systems are installed according to specified requirements.

1.6 PROJECT CONDITIONS

A. Environmental Limitations: Do not install through-penetration firestop systems when ambient or substrate temperatures are outside limits permitted by through-penetration firestop system manufacturers or when substrates are wet due to rain, frost, condensation, or other causes.

B. Ventilate through-penetration firestop systems per manufacturer's written instructions by natural means or, where this is inadequate, forced-air circulation.

1.7 ENVIRONMENTAL REGULATIONS

A. All materials shall be asbestos free.

B. Disposal of hazardous firestop materials: Contact UM Occupational Safety and Environmental Health Hazardous Materials (734-763-4568) for instructions regarding disposal.

PART 2 - PRODUCTS

2.1 MANUFACTURERS

A. Products: Subject to compliance with requirements, provide products of one of the following manufacturers:

1. A/D Fire Protection Systems Inc.
2. Hilti, Inc.
3. Johns Manville.
4. Rectorseal Corporation
5. Specified Technologies Inc. (STI)
6. 3M; Fire Protection Products Division.
7. Tremco; Sealant/Weatherproofing Division.
8. USG Corporation.

2.2 FIRESTOPPING

A. Compatibility: Provide through-penetration firestop systems that are compatible with one another; with the substrates forming openings; and with the items, if any, penetrating through-penetration firestop systems, under conditions of service and application, as demonstrated by through-penetration firestop system manufacturer based on testing and field experience.

B. Accessories: Provide components for each through-penetration firestop system that are needed to install fill materials and to comply with Part 1 "Performance Requirements" Article. Use only components specified by through-penetration firestop system manufacturer and approved by qualified testing and inspecting agency for firestop systems indicated.

PART 3 - EXECUTION

3.1 THROUGH-PENETRATION FIRESTOP SYSTEM INSTALLATION

A. Examination: Examine substrates and conditions for compliance with requirements for opening configurations, penetrating items, substrates, and other conditions affecting performance of firestopping. Notify the Owner's Representative in writing if unsatisfactory conditions are present. Do not proceed with installation until unsatisfactory conditions have been corrected.

B. Use masking tape to prevent firestopping from contacting adjoining surfaces that will remain exposed upon completion of Work. Remove tape as soon as it is possible to do so without disturbing the firestopping seal with substrates.

C. General: Install through-penetration firestop systems to comply with Part 1 "Performance Requirements" Article and with firestop system manufacturer's written installation instructions and published drawings for products and applications indicated.

D. Install forming/damming/backing materials and other accessories of types required to support fill materials during their application and in the position needed to produce cross-sectional shapes and depths required to achieve fire ratings indicated.

DELETE SUBPARAGRAPH BELOW IF NONE OF THE SYSTEMS SPECIFIED REQUIRES USING REMOVABLE FORMING MATERIALS AND OTHER ACCESSORIES.

1. After installing fill materials and allowing them to fully cure, remove combustible forming materials and other accessories not indicated as permanent components of firestop systems.

E. Install fill materials for firestop systems by proven techniques to produce the following results:

1. Fill voids and cavities formed by openings, forming materials, accessories, and penetrating items as required to achieve fire-resistance ratings indicated.
2. Apply materials so they contact and adhere to substrates formed by openings and penetrating items.
3. For fill materials that will remain exposed after completing Work, finish to produce smooth, uniform surfaces that are flush with adjoining finishes.

INCLUDE IDENTIFICATION REQUIREMENT BELOW FOR ALL BFS JURISDICTION BUILDINGS. CONSIDER FOR INCLUDING FOR NON-BFS BUILDINGS.

3.2 IDENTIFICATION

A. Identify through-penetration firestop systems with preprinted metal or plastic labels. Attach labels permanently to surfaces adjacent to and within 6 inches of edge of the firestop systems so that labels will be visible to anyone seeking to remove penetrating items or firestop systems. Use mechanical fasteners for metal labels. For plastic labels, use self-adhering type with adhesives capable of permanently bonding labels to surfaces on which labels are placed and, in combination with label material, will result in partial destruction of label if removal is attempted. Include the following information on labels:

1. The words "Warning - Through-Penetration Firestop System - Do Not Disturb. Notify Building Management of Any Damage."
2. Contractor's name, address, and phone number.
3. Through-penetration firestop system designation of applicable testing and inspecting agency.
4. Date of installation.
5. Through-penetration firestop system manufacturer's name.
6. Installer's name.

3.3 CLEANING AND PROTECTION

A. Clean off excess fill materials and sealants adjacent to opening and joints as Work progresses. Use methods approved by manufacturer of firestopping products.

B. Protect firestopping during and after curing period from contact with contaminating substances.

END OF SECTION 078413

UNIVERSITY OF MICHIGAN
ARCHITECTURE, ENGINEERING AND CONSTRUCTION

ARCHITECTURE & ENGINEERING
326 East Hoover, Mail Stop B
Ann Arbor, MI 48109-1002
Phone: 734-764-3414
Fax: 734-936-3334

BuildingName
The Description of the Project
P00000000 0000

SPECIFICATION DIVISION 7

NUMBER SECTION DESCRIPTION

DIVISION 07 THERMAL AND MOISTURE PROTECTION
SECTION 079200 - JOINT SEALANTS

END OF CONTENTS TABLE

DIVISION 07 THERMAL AND MOISTURE PROTECTION
SECTION 079200 - JOINT SEALANTS

MAY 2012 - REVISED TO ADD REQUIREMENTS FOR LOW VOC PRODUCTS AND TO UPDATE PRODUCT LISTINGS.

REVISED TO DELETE FIRESTOPPING, WHICH IS NOW IN A SEPARATE SECTION, 078413. FIRE-RATED JOINT SEALERS REMAIN IN THIS SECTION (6/04).

PART 1 - GENERAL

1.1 SUMMARY

A. Extent of each type of joint sealant is indicated on drawings and by provisions of this Section.

EDIT THE FOLLOWING TO SUIT PROJECT REQUIREMENTS.

B. Types of sealants include:

1. Weather-proofing joint sealants.
2. Interior joint and seam sealers.
3. Sanitary joint sealers.
4. Fire-proofing joint sealers.

1.2 SUBMITTALS

A. Submit product data for each product indicating compliance with requirements.

USUALLY DELETE BELOW. A NOTE REGARDING ADHESION: THE ONLY WAY TO BE ENSURE A GIVEN SEALANT PRODUCT WILL ADHERE TO VARIOUS SUBSTRATES (WITH OR WITHOUR A PRIMER) IS TO DO AN ADHESION TEST. ONE STANDARD TEST CONSISTS OF APLYING THE ADHESIVE (PRIMED AS REQUIRED) TO EACH MATERIAL IN CONTACT WITH SEALANT. THE SEALANT IS ALLOWED TO CURE, AND THEN A DRY ADHESION TEST IS PERFORMED (PEELING). IF THE TEST IS PASSED, THE SAMPLE (OR ANOTHER) IS SOAKED IN WATER FOR A 24 HOUR PERIOD, AND A SIMILAR WET TEST IS PERFORMED.

B. Submit one sample tube of each approved sealant product specified for exterior applications. The Architect will perform adhesion testing.

DELETE BELOW IF NO FIRE-PROOF SEALANTS REQUIRED.

C. Fire-Proofing Sealant Schedule: Submit a schedule indicating, for each application (penetration condition or joint type), the manufacturer, product name, and UL Design number of the proposed fire-proofing sealant system to be used.

1. Submit manufacturer's data and certification as required in the "Quality Assurance" Article of this Section.

D. Product Data: For sealants and sealant primers used inside the weatherproofing system, documentation including printed statement of VOC content.

1.3 QUALITY ASSURANCE

DELETE THIS ARTICLE IF NO FIRE-PROOF SEALANTS REQUIRED.

A. Fire-Proof Sealant Design and Test Criteria: Unless a specific product or system is otherwise indicated, select fire-proof sealant system recommended by the manufacturer for each specific application indicated, and to comply with requirements indicated in the "Fire-Proofing Sealant Systems" Article of this Section. Provide only fire-proofing systems that have been tested and listed by Underwriter's Laboratories (UL) in the applications indicated.

1. Provide fire-proof sealant systems with fire-ratings equal to the fire-rated assembly into which the sealant system is incorporated.
2. Coordinate fire-proof sealant system selections with the construction detail and opening size of the fire-rated assembly; and the size, location, configuration, and material of the penetrating element (if any), to ensure full compliance with each detail of each UL Design.
3. Where an indicated application has not been tested and listed, provide a written proposal, prepared by the manufacturer of the fire-proofing system, showing materials and methods to be used, and certifying that fire-resistance rating of the fire-proofing sealant system will not be less than that of the surrounding assembly.

PART 2 - PRODUCTS

2.1 SEALANTS, GENERAL

A. Compatibility: Provide joint sealers, fillers and related materials compatible with one another and with joint substrates under conditions of service and application.

B. Colors: Provide color of exposed joint sealers indicated or, if not indicated, as selected by Owner from manufacturer's standard colors.

SEALANTS LISTED IN PART TWO COMPLY WITH THE VOC REQUIREMENTS BELOW.USE VOC COMPLIANT SEALANTS UNLESS THERE IS A SPECIFIC PROJECT REQUIREMENT THAT CAN ONLY BE SATISFIED USING NON-COMPLIANT PRODUCTS.

C. VOC Content of Interior Sealants: Sealants and sealant primers used inside the weatherproofing system shall comply with the following limits for VOC content when calculated according to 40 CFR 59, Subpart D (EPA Method 24):

1. Architectural Sealants: 250 g/L.
2. Sealant Primers for Nonporous Substrates: 250 g/L.
3. Sealant Primers for Porous Substrates: 775 g/L.

2.2 ELASTOMERIC JOINT SEALANTS

A. Elastomeric Sealant Standard: Provide manufacturer's standard chemically curing elastomeric sealants that comply with ASTM C 920 and other requirements indicated, including those requirements referencing ASTM C 920 classifications for Type, Grade, Class, and Uses.

USE THE FOLLOWING FOR TOILET ROOMS AROUND FIXTURES AND OTHER HIGH HUMIDITY AREAS; SILICONE CAULK IS NOT PAINTABLE; FOOD PREP AREAS REQUIRE SPECIAL SEALANTS.

B. One-Part Mildew-Resistant Silicone Sealant: Subject to compliance with requirements, provide one of the following, or manufacturer's equivalent two-part sealant:

Dow Corning 786; Dow Corning Corp.
SCS 1700 Sanitary; General Electric Co.
No. 898 ; Pecora Corp.
Tremsil 200; Tremco Inc.

USE THE FOLLOWING AS A CLEAR SILICONE SEALANT FOR USE IN CONJUNCTION WITH GLAZING INSTALLATIONS -NOTE THAT THE PRODUCTS BELOW ARE RATED FOR +/- 25% MOVEMENT AND THAT THEY ARE NOT SUITABLE FOR STRUCTURAL GLAZING.

C. One-Part Clear Building and Glazing Sealant: Subject to compliance with requirements, provide one of the following:

Bostik Chem-Calk 1200; Bostik, Inc.
Dow Corning 999A; Dow Corning Corp.
SCS 1200; General Electric Co.
No. 860; Pecora Corp.
Proglaze; Tremco

USE THE FOLLOWING AS A GENERAL EXTERIOR CAULK - SEE OTHER REFERENCES FOR SPECIFIC LIMITATIONS OF PRODUCT.

D. One-Part Nonsag Urethane Sealant: Subject to compliance with requirements, provide one of the following, or manufacturer's equivalent two-part sealant:

Chem-Calk 900; Bostik, Inc.
Sikaflex-1a; Sika Corp.
Dymonic; Tremco Inc.
Sonolastic NP 1; BASF Construction Chemicals LLC

2.3 LATEX JOINT SEALANTS

A. General: Provide manufacturer's standard one-part, nonsag, mildew-resistant, paintable latex sealant of formulation indicated that is recommended for exposed applications on interior and protected exterior locations and that accommodates indicated percentage change in joint width existing at time of installation without failing either adhesively or cohesively.

USE THE FOLLOWING AS GENERAL PURPOSE INTERIOR CAULK, IN LOW-MOVEMENT CONDITIONS. USE BUTYL FOR NON-MOVEMENT SEAMS IN METALS SUCH AS FILLER PANELS, CLOSURES AND SIMILAR WORK.

B. Siliconized Acrylic-Latex Sealant: Provide product complying with ASTM C 834 that accommodates joint movement of not more than 5 percent in both extension and compression for a total of 10 percent.

C. Products: Subject to compliance with requirements, provide one of the following:

1. Siliconized Acrylic-Latex Sealant:
   AC-20 + Silicon; Pecora Corp.
   Sonolac; BASF Construction Chemicals LLC
   Tremflex; Tremco, Inc.

2.4 PREFORMED FOAM SEALANTS

USE THE FOLLOWING SEALANTS FOR SEALING LARGE GAPS BETWEEN BUILIDNG ELEMENTS. SUITABLE FOR BOTH ABOVE- AND BELOW-GRADE APPLICATIONS.

A. Preformed Foam Sealants: Manufacturer's standard preformed, precompressed, impregnated open-cell foam sealant manufactured from high-density urethane foam impregnated with a nondrying, water repellent agent; factory-produced in precompressed sizes and in roll or stick form to fit joint widths indicated and to develop a watertight and airtight seal when compressed to the degree specified by manufacturer; and complying with the following requirements:

1. Properties: Permanently elastic, mildew-resistant, nonmigratory, nonstaining, and compatible with joint substrates and other joint sealants.
2. Impregnating Agent: Manufacturer's standard.
3. Density: Manufacturer's standard.
4. Backing: Pressure-sensitive adhesive factory applied to one side with protective wrapping.
5. Products: Subject to compliance with requirements, provide one of the following:
   Emseal Backerseal (Greyflex); Emseal Corp.
   Sealtite; Schul International Co.
   Illmod 600; Tremco Inc.

2.5 JOINT SEALANT BACKING

A. General: Provide sealant backings of material and type that are nonstaining; are compatible with joint substrates, sealants, primers and other joint fillers; and are approved for applications indicated by sealant manufacturer based on field experience and laboratory testing.

BELOW REQUIRED FOR THROUGH-JOINTS, DEEP JOINTS AND WITH FIRE-STOPPING SEALANTS. DELETE IF CAULKING SMALL, SHALLOW JOINTS (AROUND INTERIOR DOOR FRAMES AND PLUMBING FIXTURES FOR EXAMPLE).

B. Plastic Foam Joint Fillers: Preformed, compressible, resilient, nonstaining, nonwaxing, nonextruding strips of flexible plastic foam of material indicated below, of size, shape, and density to control sealant depth and otherwise contribute to producing optimum sealant performance; and are approved for applications indicated by sealant manufacturer based on field experience and laboratory testing:

SELECT ONE OR BOTH TYPES OF JOINT BACKER BELOW. CONFIRM COMPATIBILITY WITH SEALANT SELECTED. OPEN CELL MATERIAL IS MORE COMPRESSIBLE AND DOES NOT EMIT GAS, BUT WILL ABSORB AND RETAIN MOISTURE. CLOSED CELL MATERIAL DOES NOT ABSORB MOISTURE BUT CAN EMIT GAS. IT IS THE PREFERRED BACKING MATERIAL IN MOST CASES.

1. Open-cell polyurethane foam with impervious surface: ASTM C1330 Type O.
2. Closed-cell polyethylene foam: ASTM C1330 Type C.

USUALLY RETAIN BELOW FOR EXTERIOR JOINTS OR INTERIOR MOVEMENT JOINTS. BOND-BREAKER TAPE MAY BE USED IN CONJUNCTION WITH SOME BACKER ROD AND FOR FILLET-TYPE JOINTS.

C. Bond-Breaker Tape: Polyethylene tape or other plastic tape as recommended by sealant manufacturer for preventing sealant from adhering to rigid, inflexible joint filler materials or joint surfaces at back of joint where such adhesion would result in sealant failure. Provide self-adhesive tape where applicable.

2.6 MISCELLANEOUS MATERIALS

USUALLY RETAIN BELOW - MAY BE REQUIRED FOR PROPER SEALANT ADHESION TO SUBSTRATE.

A. Primer: Material recommended by joint sealant manufacturer where required for adhesion of sealant to joint substrates indicated, as determined from preconstruction joint sealant-substrate tests and field tests.

B. Cleaners for Nonporous Surfaces: Chemical cleaners acceptable to manufacturers of sealants and sealant backing materials, free of oily residues or other substances capable of staining or harming in any way joint substrates and adjacent nonporous surfaces, and formulated to promote optimum adhesion of sealants with joint substrates.

C. Masking Tape: Nonstaining, nonabsorbent material compatible with joint sealants and surfaces adjacent to joints.

2.7 FIRE-PROOF SEALANT SYSTEMS

DELETE PARA AND SUBPARA BELOW IF NO FIRE-PROOF SEALANT SYSTEMS.

A. Fire-Proofing Sealant System(s): Unless otherwise indicated, provide only the manufacturer's UL tested and listed sealant and accessory system(s) designed for use in each indicated application.

1. For applications subject to movement, including joints between structural elements, walls, floors, and curtain walls, and adjacent elements, provide elastomeric sealants capable of a sustaining the expected range of movement without failure.
2. For application to backs of switch and outlet boxes, provide intumescent pads.
3. Approved Manufacturers: Listed manufacturers do not necessarily provide all products required. Subject to compliance with requirements, provide applicable systems of one of the following:
   Bio-Fire Shield.
   Hilti, Inc.Metacaulk; Rectorseal Corp.
   3M Corp.
   Tremco Inc.

PART 3 - EXECUTION

3.1 INSPECTION

A. Examine joints indicated to receive joint sealers, with installer present, for compliance with requirements for joint configuration, installation tolerances and other conditions affecting joint sealer performance. Do not proceed with installation of joint sealers until unsatisfactory conditions have been corrected.

3.2 PREPARATION

A. Clean out joints immediately before installing joint sealers to comply with recommendations of joint sealer manufacturers and the following requirements:

   1. Remove all foreign material from joint substrates which could interfere with adhesion of joint sealer.
   2. Clean masonry, unglazed surfaces of ceramic tile and similar porous joint substrate surfaces. Remove loose particles remaining from above cleaning operations by vacuuming or blowing out joints with oil-free compressed air.
   3. Clean metal, glass, porcelain enamel, surfaces of ceramic tile; and other nonporous surfaces by chemical cleaners or other means which are not harmful to substrates or leave residues capable of interfering with adhesion of joint sealers.

B. Joint Priming: Prime joint substrates where indicated or where recommended by joint sealer manufacturer based on prior experience. Apply primer to comply with joint sealer manufacturer's recommendations.

C. Masking Tape: Use masking tape where required to prevent contact of sealant with adjoining surfaces.

3.3 SEALANT INSTALLATION

A. Installation: Comply with joint sealer manufacturer's printed installation instructions applicable to products and applications indicated, except where more stringent requirements apply.

EDIT FOLLOWING 3 TYPES TO INCLUDE STANDARDS FOR RELEVANT PRODUCTS.

B. Elastomeric Sealant Installation Standard: ASTM C 962.

ABOVE FOR SILICONES, URETHANES, AND POLYSULFIDES.

C. Acrylic Emulsion Sealant Installation Standard: ASTM C 790.

D. Installation of Sealant Backings: Install sealant backings to comply with the following requirements:

1. Provide support of sealants during application and at position required to produce the cross-sectional shapes and depths of installed sealants relative to joint widths which allow optimum sealant movement capability.

PROVIDE BELOW ONLY WHERE REQUIRED.

2. Remove absorbent joint fillers which have become wet prior to sealant application and replace with dry material.

PROVIDE BELOW ONLY WHERE REQUIRED.

E. Install bond breaker tape between sealants and joint fillers, compression seals, or back of joints where adhesion of sealant to surfaces at back of joints would result in sealant failure.

F. Install sealants to directly contact and fully wet joint substrates, completely fill recesses, and providing uniform, cross-sectional shapes and depths relative to joint widths which allow optimum sealant movement capability.

G. Immediately after sealant application and prior to time skinning or curing begins, tool sealants to form smooth, uniform beads of configuration indicated. Remove excess sealants; do not use tooling agents which discolor sealants or adjacent surfaces or are not approved by sealant manufacturer.

1. Provide concave joint configuration per Figure 6A in ASTM C 962, unless otherwise indicated.

H. Clean off excess sealants of sealant smears adjacent to joints as work progresses by methods and with cleaning materials approved by manufacturers of joint sealers and of products in which joints occur.

I. Protect joint sealers during and after curing period from contact with contaminating substances or from damage resulting from construction operations or other causes. Cut out and remove damaged or deteriorated joint sealers immediately and reseal joints with new materials to produce repaired areas indistinguishable from original work.

DELETE BELOW IF NO FIRE-PROOFING SEALANTS.

3.4 FIRE-PROOFING SEALANT SYSTEM INSTALLATION

A. Installation of Fire-Proof Sealant Systems: Install sealant system, including forming, packing, and other accessory materials to fill openings in fire-rated assemblies. Comply with installation requirements of the relevant UL Design number, and in accordance with manufacturer's recommendations.

3.5 JOINT SEALER SCHEDULE

EDIT THE FOLLOWING LIST TO SUIT PROJECT. DELETE IF NO EXTERIOR JOINTS.

A. Exterior Joints(Exposed to Weather): Install indicated sealants at each scheduled joint condition:

1. Perimeter joints between concrete or masonry and metal frames of louvers and windows:
   a. One-part nonsag urethane.
2. Perimeter joints between masonry and wood door and window frames:
   a. One-part nonsag urethane.
3. Other joints as indicated.
   a. As indicated, or if not indicated, provide nonsag urethane sealant.

EDIT THE FOLLOWING LIST TO SUIT PROJECT.

B. Interior Joints (In Conditioned Spaces): Install indicated sealants at each scheduled joint condition:

1. Perimeter joints of exterior openings where shown, or if not shown, where exterior caulking is indicated:
   a. One- or two-part nonsag urethane.
   b. Acrylic emulsion sealant.
2. Perimeter joints between interior wall surfaces and frames of interior doors, and windows.
   a. Acrylic emulsion sealant.
3. Perimeter joints of toilet fixtures and urinals, at pipe penetrations through ceramic tile, and similar applications:
   a. One-part mildew resistant silicone sealant.
4. Other joints as indicated.
   a. As indicated, or if not indicated, provide acrylic emulsion sealant.

3.6 FIRE-PROOFING SEALANT SYSTEM SCHEDULE

ADD TO OR DELETE ITEMS LISTED BELOW.

A. Provide manufacturer's UL tested and approved sealant systems in each of the following applications:

1. Joints between the tops of new fire-rated walls and structural deck above.
2. Joints between fire-rated walls and floors and exterior building curtain wall.
3. Joints between fire-rated assemblies or within fire-rated assemblies as required to maintain indicated fire-rating of the assembly.

4. At the backs of switch and outlet boxes within fire-rated drywall walls.
5. Other joints as shown on drawings.

END OF SECTION 079200

UNIVERSITY OF MICHIGAN
ARCHITECTURE, ENGINEERING AND CONSTRUCTION

ARCHITECTURE & ENGINEERING
326 East Hoover, Mail Stop B
Ann Arbor, MI 48109-1002
Phone: 734-764-3414
Fax: 734-936-3334

BuildingName
The Description of the Project
P00000000 0000

SPECIFICATION DIVISION 8

NUMBER SECTION DESCRIPTION

DIVISION 08 OPENINGS
SECTION 081113 – HOLLOW METAL DOORS AND FRAMES

END OF CONTENTS TABLE

DIVISION 08 OPENINGS
SECTION 081113 – HOLLOW METAL DOORS AND FRAMES

PART 1 - GENERAL

1.1 SUMMARY

A. Extent of steel doors and frames is indicated on drawings and in schedules.

B. Types of hollow metal work includes:

1. Steel doors.
2. Steel door frames.
3. Steel window frames.

USUALLY OMIT BELOW AND INCLUDE LOUVERS IN THIS SECTION, OR ELIMINATE IF NONE.

C. Work of Other Sections: Door louvers provided under Division 08 Section "Louvers and Vents".

1.2 SUBMITTALS

A. Product Data: Mfr's standard details and specifications for steel doors and door and window frames.

B. Shop Drawings: Indicate application of products to project.

1.3 QUALITY ASSURANCE

A. Standards: Comply with Steel Door Institute (SDI) "Recommended Specifications for Standard Steel Doors and Frames" for materials quality, metal gages, and construction details for Grades and Models indicated in Part 2 of this Section.

PART 2 - PRODUCTS

2.1 ACCEPTABLE MANUFACTURERS

A. Manufacturer: Subject to compliance with requirements, provide products of one of the following:

Amweld Building Products, Inc.
Ceco Corp.
Curries Co.
Pioneer Builders. Products Corp./Div. CORE Industries, Inc.
Republic Builders Products
Steelcraft/Div. American Standard Co.

2.2 STEEL DOORS AND FRAMES

A. Materials: Steel doors and frames; hot-rolled, pickled and oiled per ASTM A 569 and A 568; cold-rolled per ASTM A 366 and A 568.

DELETE BELOW IF NO EXTERIOR DOORS/FRAMES OR INTERIOR FRAMES REQUIRING CORROSION PROTECTION

1. Steel for exterior doors and frames, including their anchors, and interior doors and frames indicated as galvanized: ASTM A653/A653M, commercial quality, G90 coating designation.

B. Steel Doors, General: Provide doors complying with material and construction requirements of ANSI/SDI-100 for the indicated Grades and Models:

GENERALLY SELECT GRADE BELOW - NOTE THAT GRADE I CAN BE SUBSTITUTED FOR CHEAPNESS, OR TEMPORARY OR VERY LIGHT-DUTY USE.

1. Grade II, heavy-duty (Level B); 1-3/4-inch thick; min. 18 gage face sheets.

INCLUDE BELOW ONLY FOR VERY HEAVY-DUTY USE.

2. Grade III, Extra Heavy-duty (Level A); 1-3/4-inch thick; min. 16 gage face sheets.

USUALLY SELECT MODEL BELOW

3. Model 3, Seamless - Hollow Steel Construction; or Model 4, Seamless - Composite Construction as standard with door manufacturer or to comply with other specified requirements of this Section.

CONSIDER MODEL BELOW FOR RAPID-DELIVERY, OR CHEAPER DOOR

4. Model 1, Full Flush - Hollow Steel Construction, except vertical edge seams shall be of mechanical interlock type.

INCLUDE BELOW FOR EXTERIOR DOORS

5. Provide steel doors located in exterior walls (exposed to weather) with thermally insulating core.

C. Steel Frames, General: Provide frames complying with material and construction requirements of ANSI/SDI-111A, and as follows:

1. Metal Thickness: Min. 16 gage.

USUALLY SELECT ABOVE AND DELETE BELOW. SDI RECOMMENDS 18 GAGE ONLY FOR USE WITH GRADE I DOORS.

2. Metal Thickness: Min. 18 gage.
3. Type: Welded (masonry walls and partitions).

DELETE EITHER ABOVE OR BELOW, OR RETAIN BOTH TO SUIT PROJECT

4. Type: Drywall Slip-On (drywall walls and partitions).

DELETE BELOW IF NO FIRE-RATED ASSEMBLIES

D. Fire-rated Assemblies: Provide units that are labeled and listed for rating indicated, by Underwriters' Laboratories or Warnock-Hersey.

E. Anchors and Accessories: Manufacturer's standard units. Use galvanized items for units built into exterior walls, complying with ASTM A 153.

2.3 FABRICATION

A. Fabricate units to be rigid, neat in appearance, and free from defects, warp or buckle. Weld exposed joints continuously, grind, dress, and make smooth, flush and invisible.

THE FOLLOWING IS A MICHIGAN BARRIER FREE CODE REQUIREMENT (REF. 4.13.14).

B. Cut-Outs: Regardless of cut-out locations shown on Drawings, provide flush panel at the bottom 10 inches of each door, in compliance with State of Michigan barrier-free requirements.

C. Prepare steel doors and frames to receive mortised and concealed finish hardware, including cutouts, reinforcing, drilling and tapping, complying with ANSI A 115 "Specifications for Door and Frame Preparation for Hardware".

1. Prepare frames to receive 3 silencers on strike jambs of single-swing frames and on heads of double-swing frames.
2. Provide 26-gage steel mortar boxes, welded to frame, at back of hardware cutouts where installed in concrete, masonry or plaster openings.

D. Locate finish hardware per DHI "Recommended Locations for Builder's Hardware".

E. Shop paint exposed surfaces of doors and frame units, including galvanized surfaces, using mfr's standard baked-on rust inhibitive primer.

PART 3 - EXECUTION

3.1 INSTALLATION

A. Placing Frames: Comply with provisions of SDI 105, unless otherwise indicated. Set frames, with spreaders, accurately in position, plumbed, aligned, and braced securely until permanent anchors are set. After wall construction is completed, remove temporary braces and spreaders, leaving surfaces smooth and undamaged.

1. Except for frames located in existing concrete, masonry, or gypsum board assembly construction, place frames before constructing enclosing walls and ceilings.

DELETE BELOW IF NO NEW MASONRY CONSTRUCTION.

2. In masonry construction, install at least 3 wall anchors per jamb adjacent to hinge location on hinge jamb and at corresponding heights on strike jamb. Acceptable anchors include masonry wire anchors and masonry T-shaped anchors.

DELETE BELOW IF NO EXISTING MASONRY CONSTRUCTION.

3. At existing concrete or masonry construction, install at least 3 completed opening anchors per jamb adjacent to hinge location on hinge jamb and at corresponding heights on strike jamb. Set frames and secure to adjacent construction with bolts and masonry anchorage devices.

DELETE BELOW IF NO NEW STEEL STUD/GYPSUM BOARD PARTITIONS.

4. In steel-stud partitions, install at least 3 wall anchors per jamb at hinge and strike levels; attach wall anchors to studs with screws.

DELETE BELOW IF NO EXISTING STEEL STUD/GYPSUM BOARD PARTITIONS.

5. In in-place gypsum board partitions, install knock-down, slip-on, drywall frames.

DELETE BELOW IF NO FIRE-RATED FRAMES.

6. Install fire-rated frames according to NFPA 80.

B. Door Installation: Fit hollow-metal doors accurately in frames, within clearances specified in ANSI/SDI 100.

1. Fitting Clearances for Non-Rated Doors: Provide 1/8-inch at jambs and heads; 1/16-inch per leaf at meeting stiles for pairs of doors; and 1/2-inch from bottom of door to top of decorative floor finish or covering. Where threshold is shown or scheduled, provide 1/8-inch clearance from bottom of door to top of threshold.

DELETE BELOW IF NOT APPLICABLE.

2. Fire-Rated Doors: Smoke and draft control door assemblies must be tested in accordance with UL 1784. Provide fitting clearances as required to meet the testing requirements of UL 1784 without the use of applied gasketing. Installation and clearances shall be in accordance with NFPA 80.
3. Smoke-Control Doors: Comply with NFPA 105.

3.2 ADJUSTING AND CLEANING

A. Prime Coat Touchup: Immediately after erection, sand smooth any rusted or damaged areas of prime coat and apply touchup of compatible air-drying primer.

B. Protection Removal: Immediately before final inspection, remove protective wrappings from doors and frames.

END OF SECTION 081113

UNIVERSITY OF MICHIGAN
ARCHITECTURE, ENGINEERING AND CONSTRUCTION

ARCHITECTURE & ENGINEERING
326 East Hoover, Mail Stop B
Ann Arbor, MI 48109-1002
Phone: 734-764-3414
Fax: 734-936-3334

BuildingName
The Description of the Project
P00000000 0000

SPECIFICATION DIVISION 8

NUMBER SECTION DESCRIPTION

DIVISION 08 OPENINGS
SECTION 081416 - FLUSH WOOD DOORS

END OF CONTENTS TABLE

DIVISION 08 OPENINGS
SECTION 081416 - FLUSH WOOD DOORS

PART 1 - GENERAL

SEPTEMBER, 2005 - EXTENSIVE REVISIONS TO UPDATE QUALITY STANDARDS AND MANUFACTURERS, REALIGN STANDARDS FOR DOOR VENEERS, AND MODIFY INFORMATION ABOUT CORE CONSTRUCTION.

1.1 SUMMARY

A. Work of this Section includes new solid core wood flush doors.

DELETE BELOW IF FACTORY FINISH IS DESIRED - FACTORY FINISH REQUIRES PRE-FIT DOORS.

B. Work of Other Sections:

1. Hollow metal door frames are provided under Division 08 Section "Hollow Metal Doors and Frames."
2. Door hardware is provided under Section Division 08 Section "Door Hardware".

OMIT BELOW IF NO OTHER GLAZING IS INCLUDED IN PROJECT. IF ONLY INTERIOR GLAZING IS INCLUDED, CHANGE SECTION 088000 "GLAZING" AND SECTION 088010 "GLAZING (INTERIOR APPLICATIONS)."

3. Glass view panels in doors provided under Division 08 Section "Glazing".
4. Field finishing of wood doors is included in Division 09 Section "Painting".

USUALLY OMIT BELOW AND INCLUDE LOUVERS IN THIS SECTION, OR ELIMINATE IF NONE.

5. Door louvers provided under Division 08 "Louvers and Vents".

1.2 QUALITY ASSURANCE

A. Woodworking Standards: In addition to requirements specified, comply with the latest edition of AWI "Architectural Woodwork Quality Standards Illustrated".

RETAIN PARAGRAPH BELOW IF FIRE-RATED DOORS ARE REQUIRED.

B. Fire-Rated Wood Doors: Doors complying with NFPA 80 that are listed and labeled by a qualified testing agency, for fire-protection ratings indicated, based on testing at as close to neutral pressure as possible according to NFPA 252.

C. Manufacturer: Obtain doors from a single manufacturer to ensure uniformity in quality of appearance and construction, unless otherwise indicated.

1.3 SUBMITTALS

A. Product Data: Mfr's literature indicating compliance with requirements and installation instructions.

B. Shop Drawings: Provide schedules and drawings indicating location, size, fire ratings, face materials, core construction, finishes, and elevations for each door required.

DELETE BELOW IF NO GLASS LITES OR OTHER CUTOUTS IN WOOD DOORS.

1. Coordination Drawings: Provide coordination drawings for each wood door. Indicate size and location of mortises and cut-outs, including those required for door hardware preparation, glass lights, louvers, and similar openings. Indicate any conditions that would violate manufacturer's special product warranty.

C. Provide AWI Quality Certification Labels or an AWI letter of licensing for Project indicating that doors comply with requirements of grades specified.

D. Samples for Verification: Factory finishes applied to actual door materials, approximately 8 by 10 inches, for each material and finish. For each wood species and transparent finish, provide set of 3 samples sharing typical range of color and grain to be expected in the finished work.

1.4 DELIVERY, STORAGE AND HANDLING

A. Protect wood doors during transit, storage, and handling to prevent damage, soiling and deterioration. Comply with requirements of referenced ANSI standard, as well as with manufacturer's instructions.

1.5 PROJECT CONDITIONS

A. Environmental limitations: Do not deliver or install doors until conditions for temperature and relative humidity have been stabilized and will be maintained in storage and installation areas during the remainder of the construction period to comply with requirements of the referenced quality standard.

1.6 SPECIAL PRODUCT WARRANTY

A. Provide the following special product warranty:

1. On door mfr's standard form, signed by mfr, Installer and Contractor, agreeing to repair or replace defective doors as defined by referenced standards.
2. Warranty shall be in effect during life of installation.

PART 2 - PRODUCTS

2.1 ACCEPTABLE MANUFACTURERS

A. Manufacturers: Subject to compliance with requirements, provide products of one of the following:

Algoma Hardwoods Inc.
Eggers Industries, Architectural Products Div.
Haley Brothers, Inc.
Ipik Door Co.

Marshfield Door Systems Inc.
Mohawk Flush Doors Inc.
Oshkosh Architectural Door Co.
VT Industries, Inc.
Custom millwork firm complying with indicated requirements.

2.2 WOOD DOORS, GENERAL

BELOW FOR DOORS WITH TRANSPARENT FINISH. INCLUDE "B" BELOW FOR DOORS WITH PAINT GRADE FACES.

A. Provide solid core interior flush doors for transparent finish and as follows:

1. Construction: AWI Custom, unless noted otherwise.
2. Exposed Surfaces: Same veneer on both faces of each door, and as follows:

SELECTIONS BELOW REPRESENT COMMONLY AVAILABLE VENEERS WITH A REASONABLE BALANCE BETWEEN APPEARANCE AND COST. SELECT ONE OR MORE PARAGRAPHS BELOW OR MODIFY SPECIES FOR A DIFFERENT APPEARANCE, BUT BE AWARE THAT UPGRADES MAY SIGNIFICANTLY ADD TO COST. BALANCED IN LIEU OF RUNNING MATCH CAUSES SUBSTANTIAL UPCHARGE DUE TO WASTE; AND RIFT OR QUARTER SAWN IN LIEU OF PLAIN SLICED OR ROTARY CUT MAY RESULT A SIGNIFICANT UPCHARGE.

a. Faces: Plain sliced Red Oak veneer, A Grade; running; book or slip matched.
b. Faces: Plain sliced White Maple, A Grade; running; book or slip matched.
c. Faces: Plain sliced Walnut, A Grade; running; book or slip matched.
d. Faces: Rotary cut White Birch (all sapwood); running; book or slip matched).

SELECT ONE OF THE FOLLOWING EDGE TYPES.

e. Edges: Manufacturer's standard hardwood.
f. Edges: Hardwood species matching faces.

SELECT APPROPRIATE CORE CONSTRUCTION TYPES FROM LIST BELOW. NOTE SPECIAL DOOR FOR LARGE CUT-OUTS LISTED BELOW.

3. Core Construction: Provide doors fabricated with core construction types as follows:

SELECT BELOW FOR MOST PROJECTS FOR SMOOTHER FACES, STANDARD MATCHING HARDWOOD EDGES, FINER EDGE DETAIL (2-PLY SKIN VS 3-PLY SKIN), AND BONDED CORE.

a. Core Construction: PC-5 (Particleboard core, 5 ply); ANSI A208.1, Grade 1-LD-2.

DELETE ABOVE AND SELECT BELOW IF ECONOMY IS OF PARAMOUNT IMPORTANCE FOR PROJECT. PC-7 IS CONSIDERED TO BE LOWER QUALITY CONSTRUCTION.

b. Core Construction: PC-5 or -7 (Particleboard core, 5-ply or 7-ply, at Contractor's option); ANSI A208.1, Grade 1-LD-2.

c. Provide doors with structural-composite-lumber cores instead of particleboard cores for doors indicated to receive exit devices.

FOR DOORS WITH LARGE GLASS LITES SELECT CORE BELOW AND VERIFY AVAILABILITY WITH MANUFACTURERS. MOST PARTICLEBOARD CORE DOORS HAVE LIMITED GLASS SIZES AS A REQUIREMENT TO MAINTAIN WARRANTY.

d. Core Construction: SCL-5 with special warranty for full glass application (Structural Composite Lumber, 5-ply).

BELOW FOR HOSPITAL PROJECTS ONLY.

e. Core Construction: SCL-5 or -7 (Structural Composite Lumber, 5 or 7 ply).

DELETE BELOW IF NO WOOD FIRE DOORS.

f. Fire Door Core Construction: Noncombustible mineral product complying with requirements of referenced quality standard and testing and inspecting agency for fire-protection rating indicated.

1) Blocking: Provide composite blocking with improved screw-holding capability approved for use in doors of fire-protection ratings indicated as needed to eliminate through-bolting hardware.

2) Edge Construction: At hinge stiles, provide laminated-edge construction with improved screw-holding capability and split resistance. Comply with specified requirements for exposed edges.

DELETE ANY PARAGRAPHS BELOW WHICH DO NOT APPLY.

3) Fire Core Construction: FD 1-1/2 (90 min. fire door).

4) Fire Core Construction: FD 3/4 (45 min. fire door).

5) Fire Core Construction: FD 1/3 (20 min. fire door).

INCLUDE BELOW FOR PAINT-GRADE DOORS.

B. Provide solid core interior flush doors for painted finish and as follows:

1. AWI Grade: Paint.
2. Exposed Surfaces: Medium Density Overlay.
3. Core Construction: PC-5 or -7 (Particleboard core, 5 or 7-ply).

DELETE BELOW IF NO FIRE-RATED PAINT-GRADE DOORS.

4. Fire Door Core Construction: Noncombustible mineral product complying with requirements of referenced quality standard and testing and inspecting agency for fire-protection rating indicated.

a. Blocking: Provide composite blocking with improved screw-holding capability approved for use in doors of fire-protection ratings indicated as need to eliminate through-bolting hardware.

b. Edge Construction: At hinge stiles, provide laminated-edge construction with improved screw-holding capability and split resistance. Comply with specified requirements for exposed edges.

DELETE ANY PARAGRAPHS BELOW WHICH DO NOT APPLY.

1) Fire Core Construction: FD 1-1/2 (90 min. fire door).
2) Fire Core Construction: FD 3/4 (45 min. fire door).
3) Fire Core Construction: FD 1/3 (20 min. fire door).

2.3 LOUVERS AND LIGHT FRAMES

DELETE THE FOLLOWING IF NO LOUVERS OR LIGHT FRAMES ARE REQUIRED. RETAIN APPLICABLE TYPES. COORDINATE DRAWINGS IF MORE THAN ONE TYPE IS REQUIRED.

A. Wood Louvers: Door manufacturer's standard solid wood louvers, species and finish to match door veneer, unless otherwise indicated, and of size indicated.

B. Metal Louvers: Size, type, and profile shown and fabricated from the following:

SELECT APPLICABLE MATERIAL. DELETE OTHERS.

1. Galvanized Steel: 0.0396 inch (1.0 mm) thick; hot dip, zinc coated, and factory primed for paint finish.
2. Natural Aluminum: Extruded aluminum with natural-anodized finish complying with AA-M12C22A31, Class II.
3. Color-Anodized Aluminum: Extruded aluminum with AA-M12C22A32/34, Class II finish.
   a. Color: Standard aluminum industry color(s) as indicated.

RETAIN APPLICABLE COLOR SELECTION ABOVE OR BELOW, OR DELETE BOTH AND INSERT SELECTED FINISH.

   b. Color: Match Architect's sample.

INSERT REQUIREMENTS FOR OTHER KINDS OF LOUVERS, GRILLES, AND VENTS AS REQUIRED.

C. Metal Frames for Light Openings in Fire-Rated Doors: Manufacturer's standard frame formed of 0.0478-inch- (1.2-mm-) thick cold-rolled steel sheet, factory primed for paint finish, and approved for use in doors of fire-protection rating indicated.

DELETE ABOVE OR BELOW OR BOTH IF NO LIGHT OPENINGS. IF FRAMES FOR NON-FIRE-RATED DOORS ARE REQUIRED, INSERT REQUIREMENTS. OTHER TYPES OF FRAMES ARE AVAILABLE FROM SOME MFRS. SEE EVALUATIONS.

D. Wood-Veneered Beads for Light Openings in Fire-Rated Doors: Manufacturer's standard wood-veneered non-combustible beads matching veneer species of door faces and approved for use in doors of fire-protection rating indicated.

2.4 FABRICATION

A. Fabricate flush wood doors in sizes indicated. Produce doors complying with following requirements:

1. Produce doors for job-site fitting, except as otherwise required for fire-rating labeling.

RETAIN BELOW FOR PREFINISHED DOORS AND FIRE-RATED DOORS. FOR NON-RATED NON-PREFINISHED DOORS, FACTORY FITTING IS OPTIONAL.

IF BOTH JOB-SITE FITTED AND FACTORY-PREFIT AND PREMACHINED DOORS ARE INCLUDED, BE SURE TO SPECIFY TYPE FOR EACH DOOR IN THE DOOR SCHEDULE.

2. Factory-prefit and premachine fire-rated doors and other doors as indicated to fit frame opening sizes indicated.
   a. Comply with requirements in NFPA 80 for fire-rated doors. Smoke and draft control door assemblies must be tested in accordance with UL 1784. Provide fitting clearances as required to meet the testing requirements of UL 1784 without the use of applied gasketing.

COORDINATE SIZES OF LIGHT OPENINGS WITH REQUIREMENTS OF MANUFACTURERS' WARRANTY. USE SCL CORE FOR OPENINGS EXCEEDING THE FOLLOWING:

DOOR LITE IS LESS THAN 42-INCHES ABOVE FLOOR AND DOOR STILE IS LESS THAN 10-INCHES WIDE.

CUT-OUT IS MORE THAN 40 PERCENT OF THE DOOR SURFACE AREA.

ANY CUT-OUT IS MORE THAN 54-INCHES IN LENGTH.

3. Openings: Cut and trim openings through doors in factory to comply with applicable requirements of referenced standards for kinds of doors required. Trim light openings with hardwood moldings of species matching door veneer and mfr's standard profile, except where metal trim is required for indicated fire rating.

FOR FIRE-RATED DOORS, ALWAYS RETAIN PARAGRAPH BELOW. FOR NON-RATED DOORS, FACTORY GLAZING IS RECOMMENDED.

   a. Factory install glazing.

THE FOLLOWING IS A MICHIGAN BARRIER FREE CODE REQUIREMENT.

   b. Regardless of cut-out locations shown on Drawings, provide flush panel at the bottom 10 inches of each door, in compliance with State of Michigan barrier-free design requirements.

RETAIN THIS ARTICLE IF FACTORY-FINISHING IS NOT REQUIRED FOR OPAQUE DOORS. FACTORY FITTING IS RECOMMENDED TO MINIMIZE DAMAGE TO SHOP-PRIMED DOORS.

2.5 SHOP PRIMING

A. Doors for Opaque Finish: Shop prime doors with one coat of wood primer specified in Division 09 Section "Painting". Seal all four edges, edges of cutouts, and mortises with primer.

DELETE ARTICLE BELOW IF FACTORY FINISHING IS NOT REQUIRED. FACTORY PRE-FINISH CAN RESULT IN SUPERIOR QUALITY AND COVERAGE.

2.6 FACTORY FINISHING

A. General: Comply with referenced quality standard for factory finishing. Complete fabrication, including fitting doors for openings and machining for hardware that is not surface applied, before finishing.

1. Finish faces, all four edges, edges of cutouts and mortises. Stains and fillers may be omitted on bottom edges, edges of cutouts and mortises.

B. Finish wood doors at factory.

BELOW IS FOR TRANSPARENT FINISH. OPAQUE FINISH ALSO AVAILABLE - SEE AIA MASTERSPEC.

C. Transparent Finish: Comply with requirements indicated for grade, finish system, staining effect, and sheen.

1. Grade: Custom.
2. Finish: AWI System TR-6 catalyzed polyurethane.

SELECT 1 REQUIREMENT FROM 2 BELOW.

3. Staining: None required.
4. Staining: Match approved sample for color.

SELECT 1 REQUIREMENT FROM 2 BELOW. USUALLY RETAIN FILLED FINISH.

5. Effect: Open-grain finish.
6. Effect: Filled finish.

SELECT 1 REQUIREMENT FROM 2 BELOW.

7. Sheen: Satin.
8. Sheen: Semigloss.

PART 3 - EXECUTION

3.1 EXAMINATION

A. Examine doors and installed door frames before hanging doors.

1. Verify that frames comply with indicated requirements for type, size, location and swing characteristics and have been installed with level heads and plumb jambs.
2. Reject doors with defects.

B. Proceed with installation only after unsatisfactory conditions have been corrected.

3.2 INSTALLATION

A. Hardware: For installation, see Division 08 Section "Door Hardware."

B. Install wood doors to comply with manufacturer's instructions, referenced AWI standard, and as indicated.

1. Install doors after installation of carpeting or other flooring materials.
2. Install fire-rated doors in corresponding fire-rated frames according to NFPA 80.

INCLUDE THE FOLLOWING FOR MOST PROJECTS.

C. Job-Fit Doors: Align and fit doors in frames with uniform clearances and bevels as indicated below; do not trim stiles and rails in excess of limits set by manufacturer. Machine doors for hardware. Seal cut surfaces after fitting and machining.

RETAIN BELOW IF NON-FIRE-RATED DOORS ARE INCLUDED IN PROJECT.

1. Fitting Clearances for Non-Rated Doors: Provide 1/8-inch maximum at jambs, heads and at meeting stiles for pairs of doors; 1/2-inch maximum from bottom of door to top of decorative floor finish or covering; and 3/4-inch maximum from top of non-combustible floor unless otherwise indicated. Where threshold is shown or scheduled, provide 3/8-inch clearance from bottom of door to top of threshold.
2. Bevel non fire-rated doors 1/8 inch in 2 inches at lock and hinge edges.
3. Fitting Clearances for Fire-Rated Doors: Smoke and draft control door assemblies must be tested in accordance with UL 1784. Provide fitting clearances as required to meet the testing requirements of UL 1784 without the use of applied gasketing. Installation and clearances shall be in accordance with NFPA 80.

USUALLY DELETE BELOW - RETAIN IF DOORSE VERY RARE FOR UNIVERSITY WORK.

D. Factory-Fitted Doors: Align in frames for uniform clearance at each edge.

E. Factory-Finished Doors: Restore finish before installation if fitting or machining is required at Project site.

3.3 ADJUSTING AND PROTECTION

A. Operation: Rehang or replace doors which do not swing or operate freely.

B. Protect doors as recommended by door manufacturer to ensure that wood doors will be without damage or deterioration at time of Substantial Completion.

END OF SECTION 081416

UNIVERSITY OF MICHIGAN
ARCHITECTURE, ENGINEERING AND CONSTRUCTION

ARCHITECTURE & ENGINEERING
326 East Hoover, Mail Stop B
Ann Arbor, MI 48109-1002
Phone: 734-764-3414
Fax: 734-936-3334

BuildingName
The Description of the Project
P00000000 0000

SPECIFICATION DIVISION 8

NUMBER SECTION DESCRIPTION

DIVISION 08 OPENINGS
SECTION 083113 - ACCESS DOORS AND FRAMES

END OF CONTENTS TABLE

DIVISION 08 OPENINGS
SECTION 083113 - ACCESS DOORS AND FRAMES

THIS SECTION DOES NOT INCLUDE ALL AVAILABLE PRODUCTS. FIRE-RATED AND NON FIRE-RATED CEILING PANELS ARE AVAILABLE, AS WELL AS A WIDE VARIETY OF PANELS FOR SPECIAL APPLICATIONS. REFER TO MANUFACTURER'S CATALOGS FOR FULL PRODUCT LINES.

PART 1 - GENERAL

1.1 SUMMARY

A. Extent of access doors is indicated on drawings.

B. Type of access doors include:

1. Standard metal units (for masonry and drywall walls).
2. Flush metal units (for drywall walls).
3. Fire-rated metal units (for masonry and drywall walls).

1.2 SUBMITTALS

A. Product Literature: Provide manufacturer's product literature indicating compliance with requirements.

B. Shop Drawings: Indicate application of access doors to project, including door sizes and locations, and details of construction and installation not otherwise included in product literature.

INCLUDE BELOW IF FIRE-RATED UNITS ARE SPECIFIED.

1.3 QUALITY ASSURANCE

A. Fire-Resistance Ratings: Provide each fire rated access door assembly with panel, door, frame, hinge and latch from manufacturer listed in Underwriter's Laboratories Inc's, "Building Materials Directory" for rating shown.

1. Provide UL label on each fire rated access door.

PART 2 - PRODUCTS

2.1 METAL ACCESS DOORS

UNIT BELOW SUITABLE FOR INSTALLATIONS IN MASONRY OR DRYWALL WALLS.

A. Standard Metal Access Door: Provide standard units for mounting in masonry or drywall with integral one-piece frame, and as follows:

SELECT STEEL OR STAINLESS STEEL BELOW.

1. Door: Minimum 16 gage steel.
2. Door: Minimum 16 gage stainless steel.

SELECT FRAME MATERIAL.

3. Frame: Minimum 16 gage steel.
4. Frame: Minimum 16 gage stainless steel.

MODIFY DIMENSIONS BELOW TO SUIT PROJECT - REFER TO CATALOG.

5. Door Size: 24-inches wide by 24-inches high.
6. Hinges: Concealed spring type, removable from chase side only.

INCLUDE APPLICABLE TYPE BELOW.

7. Lock: Screwdriver operated steel cam type.
8. Lock: Phillips head screwdriver operated steel cam type.
9. Lock: Allen wrench operated steel cam type.
10. Lock: Key operated cam type with removable cylinder core.

SELECT APPLICABLE TYPE BELOW.

11. Finish: Prime painted.
12. Finish: Satin finish stainless steel.

SUBSTITUTE STYLE "MS" FOR LISTED STYLE "M" BELOW IF STAINLESS STEEL UNITS SELECTED.

13. Manufacturer/Model: Provide Milcor style "M", or subject to compliance with requirements, equivalent units of Bar-Co, Cesco Products, J.L. Industries, Karp Associates Inc., or Nystrom Inc.

UNIT BELOW SUITABLE FOR INSTALLATION IN DRYWALL WHERE LESS OBTRUSIVE APPEARANCE IS DESIRED. NYSTROM MANUFACTURES A PRODUCT WITH RECESSED DOOR ALLOWING PLASTER OR DRYWALL TO COVER DOOR.

B. Flush Panel Metal Access Door: Provide flush panel units for mounting in drywall with integral drywall bead configuration outer frame, and as follows:

1. Door: Minimum 16 gage stainless steel.
2. Drywall Bead: Galvanized steel.

SELECT FROM BELOW TO SUIT PROJECT.

3. Door Size: 10-inches wide by 10-inches high.
4. Door Size: 14-inches wide by 14-inches high.
5. Door Size: 22-inches wide by 22-inches high.
6. Door Size: 24-inches wide by 24-inches high.

RETAIN HINGE TYPE BELOW.

7. Hinges: Double-acting concealed spring type.

INCLUDE APPLICABLE TYPE BELOW.

8. Lock: Screwdriver operated steel cam type.
9. Lock: Phillips head screwdriver operated steel cam type.
10. Lock: Allen wrench operated steel cam type.
11. Lock: Key operated cam type with removable cylinder core.

SELECT APPLICABLE TYPE BELOW.

12. Finish: Prime painted.

13. Manufacturer/Model: Provide Milcor style "DW", or subject to compliance with requirements, equivalent units of Bar-Co, Cesco Products, J.L. Industries, Karp Associates Inc., or Nystrom Inc.

UNIT BELOW IS FIRE RATED.

C. Fire-rated Metal Access Door: Provide UL listed and labeled fire-rated units with integral one-piece frame, automatic panel closers, and as follows:

1. Fire-rating: B-label (1-1/2 hr.)

SELECT ONE MATERIAL BELOW.

2. Door: Minimum 20 gage steel.
3. Door: Minimum 20 gage stainless steel.

SELECT ONE MATERIAL BELOW.

4. Frame: Minimum 16 gage steel.
5. Frame: Minimum 16 gage stainless steel.

MODIFY DIMENSIONS BELOW TO SUIT PROJECT - REFER TO CATALOG

6. Door Size: Approximately 24-inches wide by 24-inches high.
7. Hinges: Continuous steel hinge with stainless steel pin, removable from chase side only.

INCLUDE APPLICABLE TYPE BELOW.

8. Latch: Self-latching type with knurled knob.
9. Lock: Cylinder lockset with self-latching action and with removable cylinder core.

SELECT APPLICABLE TYPE BELOW.

10. Finish: Prime painted.
11. Finish: Satin finish stainless steel.
12. Manufacturer/Model: Provide products of Milcor, or subject to compliance with requirements, equivalent products of Bar-Co, Cesco Products, J.L. Industries, Karp Associates Inc., or Nystrom Inc.

PART 3 - EXECUTION

3.1 INSTALLATION

A. Comply with manufacturer's installation instructions for application indicated.

1. Install fire-rated units in compliance with applicable codes and regulations to provide fully fire-rated finished assembly.

B. Anchor frame to existing construction with expansion anchors to masonry substrate. Position anchors in concealed frame flange.

C. Test and adjust doors after installation to eliminate rubbing and binding. Remove and reinstall units if necessary to provide proper door operation.

END OF SECTION 083113

UNIVERSITY OF MICHIGAN
ARCHITECTURE, ENGINEERING AND CONSTRUCTION

ARCHITECTURE & ENGINEERING
326 East Hoover, Mail Stop B
Ann Arbor, MI 48109-1002
Phone: 734-764-3414
Fax: 734-936-3334

BuildingName
The Description of the Project
P00000000 0000

SPECIFICATION DIVISION 8

NUMBER SECTION DESCRIPTION

DIVISION 08 OPENINGS
SECTION 083313 – COILING COUNTER DOORS

END OF CONTENTS TABLE

DIVISION 08 OPENINGS
SECTION 083313 – COILING COUNTER DOORS

PART 1 - GENERAL

EDIT SECTION TO ELIMINATE REFERENCES TO FIRE-RATED UNITS IF NONE IN PROJECT.

1.1 SUMMARY

A. This Section includes the following.

1. Rolling counter doors.
2. Fire-rated rolling counter doors.

1.2 SUBMITTALS

A. Product Data: Submit mfr's literature and installation instructions.

B. Shop Drawings: Indicate elevation, sizes, trim and installation details.

PART 2 - PRODUCTS

2.1 ACCEPTABLE MANUFACTURERS

A. Manufacturers: Subject to compliance with requirements, provide units of one of the following mfrs:

The Cookson Company
Cornell Iron Works Inc.
Mahon Door Corporation
Raynor Garage Doors
Wilson Corp.

2.2 ROLLING COUNTER DOORS

A. Overhead Rolling Counter Fire Doors: Manually operated, spring counterbalanced, push-up type rolling counter door for face of wall type mounting.

1. Fire Rating: UL labeled; Class B; 1-1/2 hours.

B. Materials: Fabricate units as follows:

1. Curtain: 22 gage, galvanized steel, 1-1/4 inch "midget" slats.
2. Bottom Bar: Mfr's standard, tubular section, galvanized steel, with thumb-turn type locking device and fiber weather strip.
3. Guides: Mfr's standard box section fabricated from galvanized steel.
4. Hood: 24 gage galvanized steel.
5. Automatic Closing Device: Mfr's standard release device with closing speed governor, and as follows:

a. Include time delay release device to allow connection of, and coordination with, automatic closing device and building smoke alarm system.

C. Finish: Baked polyester prime coat on surfaces exposed to view.

PART 3 - EXECUTION

3.1 INSTALLATION

A. Installation: Install in strict accordance with mfr's installation instructions and NFPA 80.

B. Final Adjustment: Inspect and adjust units for proper operation. Repair defective materials and installation, or replace defective work as directed by Architect.

END OF SECTION 083313

UNIVERSITY OF MICHIGAN
ARCHITECTURE, ENGINEERING AND CONSTRUCTION

ARCHITECTURE & ENGINEERING
326 East Hoover, Mail Stop B
Ann Arbor, MI 48109-1002
Phone: 734-764-3414
Fax: 734-936-3334

BuildingName
The Description of the Project
P00000000 0000

SPECIFICATION DIVISION 8

NUMBER SECTION DESCRIPTION

DIVISION 08 OPENINGS
SECTION 084113 - ALUMINUM-FRAMED ENTRANCES AND STOREFRONTS

END OF CONTENTS TABLE

DIVISION 08 OPENINGS
SECTION 084113 – ALUMINUM-FRAMED ENTRANCES AND STOREFRONTS

PART 1 - GENERAL

1.1 RELATED DOCUMENTS

A. Drawings and general provisions of the Contract, including Standard General Conditions, Supplemental General Conditions, Division 01 Specification Sections, and other applicable Specification Sections, apply to this Section.

B. Related Sections:

1. Division 07 Section: Air Barriers.
2. Division 07 Section: Flashing and Sheet Metal.
3. Division 08 Section "Glazed Aluminum Curtain Walls".

1.2 SUMMARY

A. Section Includes:

DELETE PRODUCT TYPES NOT REQUIRED FROM THE LIST BELOW.

1. Storefront-type framing system.
2. Exterior entrance doors.
3. Vestibule doors matching entrance doors.
4. Flush Panel FRP Doors

DELETE BELOW IF CURTAIN WALL IS INCLUDED IN PROJECT TO INSURE THAT THE CURTAIN WALL INSTALLER IS THE PRIME CONTRACTOR.

B. Work Provided Under This Section But Specified Under Other Sections:

1. The Work of this Section and applicable portions of the work of the following Sections, that are related to this Section, shall be performed by a Prime contractor providing aluminum storefront products, to establish single source responsibility for aluminum storefront products and associated components.
   a. Division 07 Section "Joint Sealants".
   b. Division 08 Section "Aluminum Windows".
   c. Division 08 Section "Door Hardware".
   d. Division 08 Section "Glazing".

1.3 SUBMITTALS

A. Product data for each aluminum entrance and storefront system required, including:

1. Manufacturer's standard details and fabrication methods.
2. Data on finishes.
3. Hardware and accessories.
4. Recommendations for maintenance and cleaning of exterior surfaces.

B. Shop drawings for each aluminum entrance and storefront system required, including:

1. Layout and installation details, including relationship to adjacent work.
2. Plans at 1/4-inch scale.
3. Elevations at 1/4-inch scale.
4. Detail sections of typical composite members.
5. Anchors and reinforcement.
6. Hardware mounting heights.
7. Provisions for expansion and contraction.
8. Glazing details.
9. Locations of field glazing where permitted.

COORDINATE HARDWARE WITH FINISH HARDWARE SECTION. THRESHOLDS, HINGES, WEATHERSTRIPPING, AND REMOVABLE MULLIONS, ARE USUALLY PROVIDED WITH ALUMINUM FRAMING. OTHER HARDWARE SHOULD BE SPECIFIED IN SECTION 087100 "DOOR HARDWARE".

C. Hardware Schedule: Submit hardware schedule organized into sets for hardware specified in this section. Coordinate hardware with Door Hardware Section to ensure proper function, and finish. Include item name, name of the manufacturer and complete designations of every item required for each door opening.

D. Samples for Initial Selection: Indicating factory-applied color finishes.

DELETE "SAMPLES FOR INITIAL SELECTION" PARAGRAPH ABOVE IF COLORS AND OTHER CHARACTERISTICS ARE PRESELECTED AND SPECIFIED OR SCHEDULED. ALWAYS RETAIN FOLLOWING 2 PARAGRAPHS WITH OR WITHOUT ABOVE PARAGRAPH.

E. Samples for Verification: For each type of exposed finish required, in minimum 8-inch lengths.

1. Include 3 or more units in each sample set showing the extreme limits of variations expected in color and texture of finish.

RETAIN PARAGRAPH BELOW TO VERIFY DETAILS OF ASSEMBLY.

F. Fabrication Sample: Of each vertical-to-horizontal intersection of assemblies, made from 12-inch lengths of full-size components and showing details of the following:

REVISE LIST BELOW TO SUIT PROJECT.

1. Joinery, including concealed welds.
2. Anchorage.
3. Expansion provisions.
4. Glazing.
5. Flashing and drainage.

G. Delegated-Design Submittal: Submit analysis data signed and sealed by the qualified Professional Engineer employed by the curtain wall manufacturer who is responsible for their preparation.

1. Show section moduli of wind-load-bearing members and calculations of stresses and deflections. Provide material properties and other information needed for structural analysis including computations.

2. Submit statement by the Professional Engineer attesting that all materials provided under this section, and related Sections, meet specified requirements.

H. Energy Performance Certificates: Forstorefront, accessories, and components, from manufacturer.

1. Basis for Certification: NFRC-certified energy performance values for glazed aluminum storefront.

I. Test Reports: Provide certified test reports from a nationally recognized qualified independent testing laboratory showing that aluminum entrance and storefront systems have been tested in accordance with specified test procedures and comply with performance characteristics indicated.

J. Field quality-control reports are submitted by Owner's Independent testing Agency.

K. Warranties: Signed original warranty documents from the curtain wall manufacturer indicating the specified terms and conditions for each curtain wall and component.

L. Maintenance Data for Curtain walls to include in maintenance manuals.

1.4 QUALITY ASSURANCE

A. Manufacturers and Products: The products and manufacturers specified in this Section establish the standard of quality for the Work. Subject to compliance with all requirements, provide specified products from the manufacturers named in Part 2.

B. Reference Standards: Products in this section shall be built, tested, and installed in compliance with the specified quality assurance standards and test methods contained in the following documents; latest editions, unless noted otherwise.

1. Applicable standards of the American Architectural Manufacturers Association (AAMA), including but not limited to:
   a. AAMA/WDMA/CSA 101/I.S.2/A440 Voluntary Performance Specification for Windows, Skylights and Glass Doors – A North American Fenestration Standard.
   b. AAMA 2605 Voluntary Specification, Performance Requirements and Test Procedures for Superior Performing Organic Coatings on Aluminum Extrusions and Panels.
   c. AAMA 611 Voluntary Specification for Anodized Architectural Aluminum.
   d. AAMA 910 Voluntary Life Cycle Specifications and Test Methods for AW Class Architectural Windows and Doors.
   e. AAMA 1503 Voluntary Test Method for Thermal Transmittance and Condensation Resistance of Windows, Doors and Glazed Wall Sections
2. Glass Association of North America (GANA) "Glazing Manual."
3. Standards of ASTM International which are referenced in other Articles in this Section.
4. National Fenestration Rating Council (NFRC) Documents and Rating System, including, but not limited to:

a. NFRC 100 Procedure for Determining Fenestration Product U-factors.
b. NFRC 200 Procedure for Determining Fenestration Product Solar Heat Gain Coefficient and Visible Transmittance at Normal Incidence.
c. NFRC 500-2010 Procedure for Determining Fenestration Product Condensation Resistance Values.

C. Delegated Design: A qualified Professional Engineer registered in Michigan, employed by the storefront manufacturer, shall design storefront assemblies, including aluminum windows where applicable, doors, glazing and all accessories for this project. The storefront assembly shall be manufactured, assembled and installed to withstand the structural load requirements as specified in this Section, the Building Code, and expected loads calculated for the building, based data indicated on the Drawings. Refer to Part 2 Performance Requirements for additional information.

D. Installer Qualifications: Engage an experienced Installer who has completed installation of aluminum storefront framing similar in design and extent to those required for the project and whose work has resulted in construction with a record of successful in-service performance.

E. Manufacturer's Preconstruction Testing Agency Qualifications: Qualified according to ISO/IEC 17025 and accredited by ICC-ES for preconstruction testing indicated.

F. Field Testing: The Owner's Testing Laboratory will validate testing of installed storefront in the building walls.

G. Single Source Responsibility: Obtain aluminum entrance and storefront systems from one source and from a single manufacturer.

1.5 MANUFACTURER TESTING

REVISE EXAMPLE TEST METHODS AND SEQUENCE IN SUBPARAGRAPH BELOW TO SUIT PROJECT AND COORDINATE WITH TESTS REQUIRED IN "PERFORMANCE REQUIREMENTS" ARTICLE. CONSULT MANUFACTURERS AND TESTING AGENCIES FOR GUIDANCE ON APPROPRIATE REQUIREMENTS FOR PROJECT.

A. Preconstruction Testing Program: Perform tests specified in "System Performance Requirements" Article on manufacturer's laboratory samples in the following order:

1. Structural-performance preloading at 50 percent of the specified wind-load design pressure when tested according to ASTM E 330.
2. Air infiltration when tested according to ASTM E283.
3. Water penetration under static pressure when tested according to ASTM E 331.
4. Structural performance at design load when tested according to ASTM E 330.
5. Repeat air filtration when tested according to ASTM E 283.
6. Repeat water penetration under static pressure when tested according to ASTM E 331.

7. Structural performance at maximum 150 percent of positive and negative wind-load design pressures when tested according to ASTM E 330.

1.6 PROJECT CONDITIONS

A. Field Measurements: Check openings by accurate field measurement before fabrication. Show recorded measurements on shop drawings. Coordinate fabrication schedule with construction progress to avoid delay of the work.

1. Where necessary, proceed with fabrication without field measurements, and coordinate fabrication tolerances to ensure proper fit.

REVISE WARRANTY PER PROJECT AND SPECIFIED MANUFACTURERS. KAWNEER PROVIDES A LIMITED LIFETIME WARRANTY ON ENTRANCE DOORS. FOLLOWING WARRANTY ON FRAMING IS OFFERED BY KAWNEER.

1.7 WARRANTY

A. Provide a complete parts and labor warranty for a minimum of two years from the date of Substantial Completion.

B. Refer to Glazing Section for glass warranties.

C. Fluoropolymer Finish Warranty: Manufacturer agrees to repair finishes or replace aluminum that shows evidence of deterioration of factory-applied fluoropolymer finishes within specified warranty period.

COORDINATE COLOR FADING AND CHALKING LIMITS WITH FINISHES RETAINED IN PART 2.

1. Deterioration includes, but is not limited to, the following:
   a. Color fading more than 5 Hunter units when tested according to ASTM D 2244.
   b. Chalking in excess of a No. 8 rating when tested according to ASTM D 4214.
   c. Cracking, checking, peeling, or failure of paint to adhere to bare metal.

VERIFY AVAILABLE WARRANTIES AND WARRANTY PERIODS FOR FINISHES WITH MANUFACTURERS LISTED IN PART 2 ARTICLES. FLUOROPOLYMER FINISHES ARE ELIGIBLE FOR 10 YEAR WARRANTIES.

2. Warranty Period: 10 years from date of Substantial Completion.

D. Anodized Finish Warranty: Manufacturer agrees to repair finishes or replace aluminum that shows evidence of deterioration of factory-applied anodized finishes within specified warranty period. Any forming or welding must be done prior to finishing.

COORDINATE COLOR FADING AND CHALKING LIMITS WITH FINISHES RETAINED IN PART 2.

1. Deterioration includes, but is not limited to, the following:
   a. Color fading more than 5 Delta-E Hunter units (square root of the sum of square Delta L, Delta a, and Delta b) as determined by ASTM D 2244.

b. Chalking in excess of a No.8 rating when tested according to ASTM D 4214.
c. Cracking, checking, flaking, or blistering.

2. Warranty Period: 10 years from date of Substantial Completion.

PART 2 - PRODUCTS

2.1 MANUFACTURERS

USUALLY RETAIN ALL MANUFACTURERS LISTED IN EACH APPLICABLE CATEGORY BELOW. DELETE INAPPLICABLE CATEGORIES.

A. Entrance Door and Storefront Manufacturers:

1. EFCO Corporation.
2. Kawneer Company, Inc.
3. Oldcastle BuildingEnvelope
4. Tubelite Inc.
5. Wausau Window and Wall Systems.

B. Flush Panel FRP Door Manufacturers:

1. Commercial Door Systems
2. Kawneer Company, Inc.
3. Rebco, Inc.
4. Special-Lite, Inc.

C. Fluoropolymer Coating Manufacturers:

1. PPG Industries.
2. Valspar Corp.
3. Akzo Nobel.

REVISE "SYSTEM PERFORMANCE REQUIREMENTS" ARTICLE BELOW IF ENTRANCES WILL BE INSTALLED IN BUILDING INTERIORS ONLY.

2.2 SYSTEM PERFORMANCE REQUIREMENTS

A. Provide aluminum entrance and storefront assemblies that comply with performance characteristics specified, as demonstrated by testing the manufacturer's corresponding stock assemblies according to test methods indicated.

B. Thermal Movement: Design the aluminum entrance and storefront framing systems to provide for expansion and contraction of the component materials. Entrance doors shall function normally over the specified temperature range.

1. The system shall be capable of withstanding a metal surface temperature range of 180 deg F (100 deg C) without buckling, failure of joint seals, undue stress on structural elements, damaging loads on fasteners, reduction of performance, stress on glass, or other detrimental effects.

C. Structural Design: Provide aluminum entrance and storefront systems that comply with structural performance, air infiltration, and water penetration requirements indicated.

VERIFY WIND LOAD FOR CONDITIONS AT UM. WIND LOADS SHOULD BE CALCULATED BY THE STRUCTURAL ENGINEER AND INDICATED ON THE DRAWINGS.

1. Structural Loads: As indicated on Drawings.
2. Structural Performance: Conduct tests for structural performance in accordance with ASTM E 330.
   a. Uniform Load: At the static air design load applied in the positive and negative direction in accordance with ASTM E 330, there shall be no deflection in excess of L/175 of the span of any framing member.
   b. At a structural test load equal to 1.5 times the specified design load, no glass breakage or permanent deformation of main framing members in excess of 0.2 percent of their clear spans shall occur.

D. Energy Performance

1. Air leakage for framing and doors shall be tested and determined in accordance with NFRC 400 and ASTM E 283.
   a. Air Infiltration Storefront Framing System: Air leakage shall not exceed 0.06 CFM per sq. ft. at minimum static-air-pressure difference of 6.24 psf.
   b. Air Infiltration Aluminum Entrance Doors: Air leakage shall not exceed 1.0 CFM per sq. ft. at a static-air-pressure differential of 6.24 psf.
2. Water Penetration under Static Pressure: No evidence of water penetration through fixed glazing and framing areas, as defined in AAMA 501, when tested according to ASTM E 331 at a minimum static-air-pressure differential of 20 percent of positive wind-load design pressure, but not less than 12 pounds per square foot.
3. Thermal Transmittance: Provide systems which comply with the following criteria. Test in accordance with NFRC 100.
   a. Framing Systems: Overall U-factor of not more than 0.45 BTU/hr. x sq. ft. x deg. F.
   b. Entrance Doors (glazed): Overall U-factor of not more than 0.80 BTU/hr. x sq. ft. x deg. F.

DELETE PARAGRAPH BELOW IF NO OPAQUE ENTRANCE DOORS.

   c. Entrance Doors (opaque): Overall U-factor of not more than 0.70 BTU/hr. x sq. ft. x deg. F.
   d. Operable Window Glazing and Framing Areas: Overall U-factor of not more than 0.55 BTU/hr. x sq. ft. x deg. F.
4. Solar Heat Gain Coefficient (SHGC): Fixed glazing and framing areas shall have a solar heat gain coefficient of no greater than 0.40 as determined according to NFRC 200.

CRF SHOWN IS MINIMUM VALUE BASED ON PRODUCTS MEETING OTHER SPECIFICATION REQUIREMENTS. ESTABLISH CRF BASED ON BUILDING OCCUPANCY FACTORS ACCORDING TO MECHANICAL DESIGN GUIDELINES. VERIFY AVAILABILITY FROM MANUFACTURERS. IF HIGHER CRF IS NEEDED, CONSIDER USING CURTAIN WALL.

5. Condensation Resistance: Provide units tested for thermal performance in accordance with AAMA 1503 showing condensation resistance factor (CRF) of not less than 56.
6. Air Infiltration:
   a. Not more than 1.0 cfm/sq. ft. for glazed swinging entrance doors.

b. Not more than 0.4 cfm/sq. ft. for all other locations.

7. Labeling: Per ANSI/ASHRAE 90.1-2007, provide a permanent nameplate, installed by the manufacturer, listing the U-factor, SHGC, and air leakage rate. The label may be the NFRC energy performance label or the AAMA performance label.

2.3 MATERIALS

DELETE MATERIALS NOT REQUIRED FOR FABRICATION OR INSTALLATION FROM THIS ARTICLE.

A. Aluminum Members: Alloy and temper recommended by the manufacturer for strength, corrosion resistance, and application of required finish; comply with ASTM B 221 for aluminum extrusions, ASTM B 209 for aluminum sheet or plate, and ASTM B 211 for aluminum bars, rods and wire.

USE WHEN REQUIRED. SYSTEMS SHALL BE NO HIGHER THAN 12 FEET.

B. Carbon steel reinforcement of aluminum framing members shall comply with ASTM A 36 for structural shapes, plates and bars, ASTM A 611 for cold rolled sheet and strip, or ASTM A 570 for hot rolled sheet and strip.

C. Panel Core Material: Rigid, closed-cell polyurethane insulation.

D. Fasteners: Provide fasteners of nonmagnetic stainless steel, compatible with aluminum components, hardware, anchors and other components.

1. Reinforcement: Where fasteners screw-anchor into aluminum members less than 0.125 inches thick, reinforce the interior with aluminum or nonmagnetic stainless steel to receive screw threads, or provide standard noncorrosive pressed-in splined grommet nuts.
2. Exposed Fasteners: Do not use exposed fasteners except for application of hardware. For application of hardware, use Phillips flat-head machine screws that match the finish of member or hardware being fastened.

E. Concealed Flashing: 0.0187-inch (26 gage) minimum dead-soft stainless steel, or 0.026-inch-thick minimum extruded aluminum of alloy and type selected by manufacturer for compatibility with other components.

F. Brackets and Reinforcements: Provide high-strength aluminum brackets and reinforcements; where use of aluminum is not feasible provide nonmagnetic stainless steel or hot-dip galvanized steel complying with ASTM A 123.

1. Concrete and Masonry Inserts: Provide hot-dip galvanized steel inserts complying with ASTM A 123.

2.4 FRAMING SYSTEMS

THE FRAMING SYSTEM IN THE NEXT PARAGRAPH MAY BE USED FOR BOTH STOREFRONT AND ENTRANCE FRAMES. EXTERIOR GLAZING IS MORE COMMON BECAUSE REGLAZING FROM THE INTERIOR IS DIFFICULT AFTER THE BUILDING IS COMPLETED.

A. Storefront Framing System: Provide storefront and entrance framing systems fabricated from extruded aluminum members of size and profile indicated. Include subframes and other reinforcing members of the type indicated. Provide for flush glazing storefront from the exterior on all sides without projecting stops. Shop-fabricate and preassemble frame components where possible. Provide storefront frame sections without exposed seams.

1. Mullion Configurations: Provide pockets at the inside glazing face to receive resilient elastomeric glazing. Mullions and horizontals shall be one piece. Make provisions to drain moisture accumulation to the exterior.
2. Exterior Locations: Provide manufacturer's thermal break construction with two separations consisting of a two-part chemically curing, high-density polyurethane, which is mechanically and adhesively joined to aluminum storefront sections.
3. Interior Locations: Where indicated, provide non-thermal break construction.

FOLLOWING ARE TYPICAL FRAMING DIMENSIONS AND GLAZING DETAIL.

4. System Dimensions - Nominal face width and Depth: 2 inches by 4-1/2 inches.

SELECT GLAZING OPTIONS FROM AVAILABLE FRAMING SYSTEMS.

5. Glass: Center Plane.
6. Glass: Inside Glazed.
7. Glass: Outside.

B. Entrance Door Frames: Provide tubular and channel frame entrance door frame assemblies, as indicated, with welded or mechanical joints in accordance with manufacturer's standards. Reinforce as necessary to support required loads. Provide units with applied stops; blade stops are not acceptable.

1. Exterior Doors: Manufacturer's standard replaceable compressible weatherstripping molded expanded EPDM or neoprene gaskets complying with ASTM C 509, Grade 4 or molded PVC complying with ASTM D 2287.
2. Interior Doors: Provide manufacturer's bulb gasket weatherstripping on stops to prevent metal-to-metal contact.

2.5 GLAZING

A. Glazing: As specified in Glazing section.

2.6 ENTRANCE DOOR SYSTEMS

A. Stile-and-Rail Type Entrance Doors: Provide tubular frame members, fabricated with mechanical joints using heavy inserted reinforcing plates and concealed tie-rods or j-bolts.

SELECT STILE AND DOOR DESIGN. COORDINATE EXIT DEVICE SELECTION IN FINISH HARDWARE SECTION WITH STILE WIDTH AND DOOR DESIGN.

GENERALLY SPECIFY MEDIUM STILE DOORS UNLESS APPROVED BY DESIGN MANAGER.

1. Door Design: Medium stile; 3-1/2-inch nominal width.

2. Door Design: Wide stile; 5-inch nominal width.

KICK SURFACE BELOW IS A REQUIREMENT OF THE ADA AND MICHIGAN BUILDING CODE. DO NOT REVISE OR DELETE.

3. Kick Surface: Provide an insulated-core, smooth surface, flush aluminum panel, extending the full width of the door, 10 inches high measured from the bottom of the door. Fabricate panel from not less than 0.125-inch thick aluminum sheet and finish to match door framing members.
4. Glazing: Fabricate doors to facilitate replacement of glass or panels, without disassembly of stiles and rails.
5. Provide manufacturer's snap-on extruded aluminum glazing stops, preformed gaskets, with exterior stops anchored for nonremoval.

B. FRP Flush Panel Doors

FLUSH PANEL DOORS ARE PREFERRED BY HOUSING FOR MANY APPLICATIONS. MANUFACTURER OF FOLLOWING SPECIFIED MATERIAL IS SPECIAL-LITE.

1. Flush Panel-Type FRP Skin Doors: Provide flush panel-type doors fabricated with tubular or extruded frame members with reinforced mechanical or welded joints; limit frame exposure to 1/2-inch maximum width on door faces. Fill core with foamed-in-place urethane.

DELETE BELOW IF NO FRP FACE SHEETS

a. Face Sheets: Provide 0.120-inch thick fiberglass reinforced polyester (FRP) face sheets with mechanically interlocked with frame members and laminated to framing with waterproof glue.

BELOW IS OPTIONAL FOR ADDED VANDAL RESISTANCE

1) FRP Sheet Surface Texture: Embossed in manufacturer's standard random (stucco) pattern.

SELECT COLOR BELOW: SPECIAL-LITE STANDARD COLORS INCLUDE WHITE, BLACK, LIGHT GRAY, DARK GRAY, BEIGE, BLUE, AND GREEN

2) Face Sheet Color: Dark Bronze.

DELETE THE NEXT PARAGRAPH IF NO LIGHTS ARE INCLUDED IN THE DESIGN.

b. Lights: Provide glazed openings as indicated, with aluminum moldings and stops. Provide nonremovable stops on the exterior.

C. Door sweeps:

1. Exterior Doors: Provide EPDM or vinyl-blade gasket weatherstripping in bottom door rail, adjustable for contact with threshold.

D. Reinforcing: Provide hardware reinforcing as required by the finish hardware scheduled in Division 08 Section “Door Hardware”.

2.7 HARDWARE

A. Provide hardware units as indicated, scheduled, or required for operation of each door as specified in Division 08 Section "Door Hardware". Include sizes, number, and types recommended by manufacturer for service required; finish to match door.

2.8 FABRICATION

A. General: Fabricate aluminum entrance and storefront components to designs, sizes and thicknesses indicated and to comply with indicated standards. Sizes and profile requirements are indicated on the drawings. Variable dimensions are indicated, with maximum and minimum dimensions required, to achieve design requirements and coordination with other work. Provide thermal break construction at exterior locations, and where indicated. Provide non thermal break construction only at interior locations where indicated.

1. Thermal Break Construction: Fabricate storefront framing system with an integrally concealed, low-conductance thermal barrier, located between exterior materials and exposed interior members to eliminate direct metal-to-metal contact. Use manufacturer's standard construction that has been in use for similar projects for period of not less than 3 years.

B. Prefabrication: Complete fabrication, assembly, finishing, hardware application, and other work to the greatest extent possible before shipment to the Project site. Disassemble components only as necessary for shipment and installation.

1. Perform fabrication operations, including cutting, fitting, forming, drilling and grinding of metal work to prevent damage to exposed finish surfaces. Complete these operations for hardware prior to application of finishes.
2. Do not drill and tap for surface-mounted hardware items until time of installation at project site.
3. Preglaze door and frame units to greatest extent possible.

C. Welding: Comply with AWS recommendations. Grind exposed welds smooth to remove weld spatter and welding oxides. Restore mechanical finish.

1. Welding behind finished surfaces shall be performed in such a manner as to minimize distortion and discoloration on the finished surface.

D. Reinforcing: Install reinforcing as required for hardware and as necessary for performance requirements, sag resistance and rigidity.

E. Dissimilar Metals: Separate dissimilar metals with bituminous paint, or a suitable sealant, or a nonabsorptive plastic or elastomeric tape, or a gasket between the surfaces. Do not use coatings containing lead.

F. Continuity: Maintain accurate relation of planes and angles with hairline fit of contacting members.

1. Uniformity of Metal Finish: Abutting extruded aluminum members shall not have an integral color or texture variation greater than half the range indicated in the sample pair submittal.

G. Fasteners: Conceal fasteners wherever possible.

2.9 FINISHES, GENERAL

A. Comply with referenced AAMA Voluntary Specifications for detailed finish requirements.

DELETE BELOW IF NO CURTAIN WALL

TYPICALLY SPECIFY FINISHES IN CURTAIN WALL SECTION.

B. Finish aluminum entrance and storefront to match other adjacent glazed aluminum curtain wall components, when applicable. Refer to Division 08 Section "Glazed Aluminum Curtain Walls" for finish requirements.

DELETE 2 ARTICLES BELOW IF SPECIFIED IN CURTAIN WALL SECTION.

2.10 FLUOROPOLYMER ALUMINUM FINISHES

RETAIN AND EDIT FINISHES IN PARAGRAPHS BELOW TO SUIT PROJECT. FLUOROPOLYMER FINISHES ARE PREFERRED BY THE U OF M.

IF RETAINING MORE THAN ONE, INDICATE LOCATION OF EACH ON DRAWINGS BY TYPE. COORDINATE WITH DESIGNATIONS IN THIS SECTION. ALUMINUM-FRAMING SYSTEMS ARE AVAILABLE WITH DUAL FINISHES, ALLOWING DIFFERENT INTERIOR AND EXTERIOR COLOR FINISHES. REFER TO STOREFRONT FRAMING MANUFACTURER'S DATA FOR ADDITIONAL INFORMATION.

RETAIN ONE OF TWO PARAGRAPHS BELOW; IF BOTH ARE REQUIRED, INDICATE LOCATION OF EACH SYSTEM ON DRAWINGS, IN SCHEDULES, OR BY INSERTS. IF SPECIFIC PRODUCTS ARE REQUIRED, NAME COATING MANUFACTURERS AND PRODUCTS.

A. High-Performance Organic Finish: Two-coat fluoropolymer finish complying with AAMA 2605 and containing not less than 70 percent PVDF resin by weight in color coat. Prepare, pretreat, and apply coating to metal surfaces to comply with coating and resin manufacturers' written instructions.

USUALLY SPECIFY 3-COAT SYSTEM FOR ENTRANCE FRAMING AND DOORS IN AREAS OF HUMAN CONTACT. INCLUDE LESS EXPENSIVE 2-COAT SYSTEM FOR FRAMING ELEMENTS NOT IN CONTACT WITH PEOPLE.

B. High-Performance Organic Finish: Three-coat fluoropolymer finish complying with AAMA 2605 and containing not less than 70 percent PVDF resin by weight in both color coat and clear topcoat. Prepare, pretreat, and apply coating to exposed metal surfaces to comply with coating and resin manufacturer's written instructions.

SELECT COLORS AS APPROVED BY THE OWNER.

C. Color and Gloss: Non-metallic solid color, dark bronze; low gloss, as selected by the Owner.

D. Field Touch-up Materials: Fluoropolymer coating produced specifically for field touch-up work by same manufacturer as shop applied coating.

2.11 ANODIC ALUMINUM FINISHES

A. Class I Clear Anodized Finish: Anodic Coating: Class I Architectural, clear film thicker than 0.7 mil) complying with AAMA 611.

RETAIN THE PARAGRAPH ABOVE IF CLEAR FINISH IS REQUIRED, OR THE PARAGRAPH BELOW IF A COLOR ANODIZED FINISH IS DESIRED.

B. Class I Color Anodized Finish: Class I Architectural, film thicker than 0.7 mil with integral color or electrolytically deposited color, complying with AAMA 611.

1. Color: Dark bronze.

PART 3 - EXECUTION

3.1 EXAMINATION

A. Examine substrates and supports, with the Installer present, for compliance with requirements indicated, installation tolerances, and other conditions that affect installation of aluminum entrances and storefronts. Correct unsatisfactory conditions before proceeding with the installation.

1. Do not proceed with installation until unsatisfactory conditions are corrected.

3.2 INSTALLATION

A. Comply with manufacturer's instructions and recommendations for installation.

B. Set units plumb, level, and true to line, without warp or rack of framing members, doors, or panels. Install components in proper alignment and relation to established lines and grades indicated. Provide proper support and anchor securely in place.

C. Construction Tolerances: Install aluminum entrance and storefront to comply with the following tolerances:

1. Variation from Plane: Do not exceed 1/8 inch in 12 feet of length or 1/4 inch in any total length.
2. Offset from Alignment: The maximum offset from true alignment between two identical members abutting end to end in line shall not exceed 1/16 inch.
3. Diagonal Measurements: The maximum difference in diagonal measurements shall not exceed 1/8 inch.
4. Offset at Corners: The maximum out-of-plane offset of framing at corners shall not exceed 1/32 inch.

D. Separate aluminum and other corrodible metal surfaces from sources of corrosion or electrolytic action at points of contact with other materials.

1. Zinc or cadmium plate steel anchors and other unexposed fasteners after fabrication.
2. Paint dissimilar metals where drainage from them passes over aluminum.
3. Paint aluminum surfaces in contact with mortar, concrete or other masonry with alkali resistant coating.
4. Paint wood and similar absorptive material in contact with aluminum and exposed to the elements or otherwise subject to wetting, with two coats of aluminum house paint. Seal joints between the materials with sealant as specified in the Joint Sealants section.

E. Drill and tap frames and doors and apply surface-mounted hardware items. Comply with hardware manufacturer's instructions and template requirements. Use concealed fasteners wherever possible.

F. Set sill members and other members in bed of sealant as indicated, or with joint fillers or gaskets as indicated to provide weathertight construction. Comply with requirements of Division 07 for sealants, fillers, and gaskets.

G. Install thresholds by field scribing around frame members, including door stops, to provide a continuous surface between across the full width of each opening from jamb to jamb.

H. Refer to the Division 08 Section "Glazing" for installation of glass and other panels indicated to be glazed into doors and framing. Preglaze door and frame units to greatest extent possible.

REVIEW WHETHER THE AMOUNT OF STOREFRONT FRAMING REQUIRES FIELD TESTING. DELETE ARTICLE BELOW IF STOREFRONT WORK IS LIMITED TO DOORS.

3.3 FIELD QUALITY CONTROL

A. Testing Agency: Owner will engage a qualified testing agency for witnessing field testing, determining that the tests are performed correctly and making the final determination whether the storefront framing system has successfully passed the tests.

B. Testing Activities: Testing and inspecting of representative areas of aluminum entrance and storefront system as installation proceeds to determine compliance of installed assemblies with specified requirements. Owner will determine locations and timing of testing.

C. Contractor shall coordinate with Testing Agency and provide the materials, equipment and labor necessary to complete the testing.

EDIT TEST AREAS AS REQUIRED.

D. The following tests will be performed in accordance with the methods and standards specified in the Performance Requirements article in Part Two of this Section:

1. Air Infiltration Tests.
2. Water Penetration Tests.
3. Water Spray Test: Before installation of interior finishes has begun.

E. Storefront framing will be considered defective if it does not pass tests and inspections.

F. If test area fails to meet the specified air infiltration or water penetration requirements, Contractor shall submit description of proposed remedial work for Owner and Architect's information.

1. Remedial work shall be incorporated into the test specimen for retesting.
2. For each area which fails field testing, one additional area of equal size shall be tested for both air infiltration and water penetration.
3. Cost of retesting shall be responsibility of Contractor.

G. Testing agency shall submit copies of test reports to Owner, Architect and Contractor within 48 hours after date of test.

H. The Owner reserves the right to select additional test areas as required, without limitation, subject to correction and remediation as specified herein.

3.4 COMMISSIONING

A. Perform the commissioning activities as outlined in the Division 01 Section "Full Project Commissioning" or "Project Commissioning for Small Projects" and other requirements of the Contract Documents.

3.5 ADJUSTING, CLEANING, PROTECTION

A. Adjust operating hardware to function properly, for smooth operation without binding, and for weathertight closure.

B. Clean the completed system, inside and out, promptly after installation, exercising care to avoid damage to coatings.

C. Clean glass surfaces after installation, complying with requirements contained in the Glazing Section for cleaning and maintenance. Remove excess glazing and sealant compounds, dirt and other substances from aluminum surfaces.

D. Institute protective measures required throughout the remainder of the construction period to ensure that aluminum entrances and storefront will be without damage or deterioration, other than normal weathering, at time of acceptance.

END OF SECTION 084113

UNIVERSITY OF MICHIGAN
ARCHITECTURE, ENGINEERING AND CONSTRUCTION

ARCHITECTURE & ENGINEERING
326 East Hoover, Mail Stop B
Ann Arbor, MI 48109-1002
Phone: 734-764-3414
Fax: 734-936-3334

BuildingName
The Description of the Project
P00000000 0000

SPECIFICATION DIVISION 8

NUMBER SECTION DESCRIPTION

DIVISION 08 OPENINGS
SECTION 084413 - GLAZED ALUMINUM CURTAIN WALLS

END OF CONTENTS TABLE

DIVISION 08 OPENINGS
SECTION 084413 - GLAZED ALUMINUM CURTAIN WALLS

SEPTEMBER 2011

DETERMINE EARLY IN DESIGN WHETHER TO USE UNITIZED OR STICK-BUILT CONSTRUCTION. UNITIZED PROVIDES BETTER QUALITY CONTROL AND FASTER ERECTION (MUCH LESS SITE LABOR REQUIRED) BUT IS CONSIDERABLY MORE EXPENSIVE AND DIFFICULT TO OBTAIN ON SMALLER PROJECTS. CONSIDER UNITIZED CONSTRUCTION IF THERE IS 40,000 SQ. FT. OR MORE OF CURTAIN WALL (NOT FLOOR AREA) AND ELEVATION IS A REGULAR PATTERN WHICH LENDS ITSELF TO PREFABRICATED COMPONENTS.

PART 1 - GENERAL

1.1 RELATED DOCUMENTS

A. Drawings and general provisions of the Contract, including Standard General Conditions, Supplemental General Conditions, Division 01 Specification Sections, and other applicable Specification Sections, apply to this Section.

B. Related Sections:

FIRST TWO SECTIONS BELOW ARE NOT PART OF AEC MASTERSPEC. DELETE UNLESS SECTIONS ARE ADDED TO PROJECT SPECIFICATIONS.

1. Division 07 Section: Air Barriers.
2. Division 07 Section: Flashing and Sheet Metal.
3. Division 07 Section "Penetration Firestopping"

1.2 SUMMARY

SYSTEM SPECIFIED BELOW IS TYPICAL. EDIT IF CUSTOM ASSEMBLIES ARE REQUIRED.

A. Section includes:

1. Conventionally glazed pressure equalized aluminum curtain walls installed as [unitized] [stick-built] assemblies.
2. Delegated Design: Curtain walls shall be designed by the manufacturer to comply with specified performance requirements and design criteria.

EDIT APPLICABLE SECTIONS TO SUIT PROJECTS.

B. Work Provided Under This Section But Specified Under Other Sections:

1. The Work of this Section and applicable portions of the work of the following Sections that are related to this Section, shall be performed by a Prime contractor providing window and curtain wall products, to establish single source responsibility for glazed aluminum curtain walls and associated components.
   a. Division 07 Section "Joint Sealants."

b. Division 08 Section "Aluminum-Framed Entrances and Storefronts."
c. Division 08 Section "Aluminum Windows."
d. Division 08 Section "Door Hardware."
e. Division 08 Section "Glazing."

1.3 SUBMITTALS

A. Product Data: For each type of product indicated. Include construction details, material descriptions, dimensions of individual components and profiles, and finishes.

B. Shop Drawings: Include plans, elevations, sections, full-size details, adjacent construction and attachments to other work.

1. Include details of provisions for assembly expansion and contraction and for draining moisture occurring within the assembly to the exterior.
2. Include full-size isometric details of each vertical-to-horizontal intersection of curtain walls, showing the following:
   a. Joinery, including concealed welds.
   b. Anchorage.
   c. Expansion provisions.
   d. Glazing.
   e. Flashing and drainage.

CURTAIN WALL IS REQUIRED TO WITHSTAND THE DESIGN LOADS WHICH ARE DETERMINED BY THE STRUCTURAL ENGINEER. RESPONSIBILITY FOR THE DESIGN OF CURTAIN WALL SYSTEM MEETING THOSE DESIGN LOADS AND OTHER PERFORMANCE CRITERIA HAVE BEEN DELEGATED TO THE CURTAIN WALL MANUFACTURER.

C. Delegated-Design Submittal: Submit analysis data signed and sealed by the qualified Professional Engineer employed by the curtain wall manufacturer who is responsible for their preparation.

1. Show section moduli of wind-load-bearing members and calculations of stresses and deflections. Provide material properties and other information needed for structural analysis including computations.
2. Submit statement by the Professional Engineer attesting that all materials provided under this section, and related Sections, meet specified requirements.

D. Samples for Initial Selection: Indicating factory-applied color finishes.

DELETE "SAMPLES FOR INITIAL SELECTION" PARAGRAPH ABOVE IF COLORS AND OTHER CHARACTERISTICS ARE PRESELECTED AND SPECIFIED OR SCHEDULED. ALWAYS RETAIN FOLLOWING 2 PARAGRAPHS WITH OR WITHOUT ABOVE PARAGRAPH.

E. Samples for Verification: For each type of exposed finish required, in minimum 8-inch lengths.

1. Include 3 or more units in each sample set showing the extreme limits of variations expected in color and texture of finish.

RETAIN PARAGRAPH BELOW TO VERIFY DETAILS OF ASSEMBLY.

F. Fabrication Sample: Of each vertical-to-horizontal intersection of assemblies, made from 12-inch lengths of full-size components and showing details of the following:

REVISE LIST BELOW TO SUIT PROJECT.

1. Joinery, including concealed welds.
2. Anchorage.
3. Expansion provisions.
4. Glazing.
5. Flashing and drainage.

G. Qualification Data for curtain wall installer demonstrating that installer is qualified for the Project.

H. Qualification Data for curtain wall manufacturer's preconstruction testing agency indicating specified certifications and experience.

I. Qualification Data for the Professional Engineer employed by the curtain wall manufacturer who is responsible for curtain wall design.

RETAIN PARAGRAPH BELOW IF RETAINING PROCEDURES FOR WELDER CERTIFICATION IN "QUALITY ASSURANCE" ARTICLE.

J. Certificates for AWS certified welders.

K. Energy Performance Certificates: For curtain walls, accessories, and components, from manufacturer.

1. Basis for Certification: NFRC-certified energy performance values for each glazed aluminum curtain wall.

RETAIN PARAGRAPH BELOW FOR STANDARD ASSEMBLIES TO VERIFY COMPLIANCE WITH PERFORMANCE REQUIREMENTS. REVISE FOR CUSTOM ASSEMBLIES.

L. Product Test Reports: Indicating compliance with structural and performance requirements based on comprehensive tests performed by preconstruction testing agency, on curtain wall units matching the system proposed for this Project.

M. Field quality-control reports are submitted by Owner's Independent testing Agency.

N. Warranties: Signed original warranty documents from the curtain wall manufacturer indicating the specified terms and conditions for each curtain wall and component.

O. Maintenance Data for Curtain walls to include in maintenance manuals.

1.4 QUALITY ASSURANCE

A. Manufacturers and Products: The products and manufacturers specified in this Section establish the standard of quality for the Work. Subject to compliance with all requirements, provide specified products from the manufacturers named in Part 2.

B. Reference Standards: Products in this section shall be built, tested, and installed in compliance with the specified quality assurance standards; latest editions, unless noted otherwise.

1. Glass Association of North America (GANA) "Glazing Manual."
2. Applicable standards of the American Architectural Manufacturers Association (AAMA), including but not limited to:
   a. AAMA 1503 Voluntary Test Method for Thermal Transmittance and Condensation Resistance of Windows, Doors and Glazed Wall Sections
   b. AAMA 2605 Voluntary Specification, Performance Requirements and Test Procedures for Superior Performing Organic Coatings on Aluminum Extrusions and Panels.
   c. AAMA 611 Voluntary Specification for Anodized Architectural Aluminum.
3. Standards of ASTM International which are referenced in other Articles of this Section.
4. National Fenestration Rating Council (NFRC) Documents and Rating System, including, but not limited to:
   a. NFRC 100 Procedure for Determining Fenestration Product U-factors
   b. NFRC 200 Procedure for Determining Fenestration Product Solar Heat Gain Coefficient and Visible Transmittance at Normal Incidence
   c. NFRC 500-2010 Procedure for Determining Fenestration Product Condensation Resistance Values

C. Delegated Design: A qualified Professional Engineer registered in Michigan, employed by the curtain wall manufacturer, shall design curtain wall assemblies, including aluminum windows where applicable, doors, glazing and all accessories for this project. The curtain wall assembly shall be manufactured, assembled and installed to withstand the structural load requirements as specified in this Section, the Building Code, and expected loads calculated for the building, based data indicated on the Drawings. Refer to Part 2 Performance Requirements for additional information.

D. Manufacturer's Preconstruction Testing Agency Qualifications: Qualified according to ISO/IEC 17025 and accredited by ICC-ES for preconstruction testing indicated.

E. Curtain Wall Manufacturer Qualifications: A manufacturer capable of fabricating curtain walls that meet or exceed specified energy performance requirements and of documenting this performance.

F. Curtain Wall Installer Qualifications: Installer who has had successful experience with installation of the same or similar systems required for the project and other projects of similar size and scope.

RETAIN PARAGRAPH BELOW IF WELDING IS REQUIRED. IF RETAINING, ALSO RETAIN "WELDING CERTIFICATES" PARAGRAPH IN "SUBMITTALS" ARTICLE.

G. Welding Qualifications: Qualify procedures and personnel according to the following:

RETAIN APPLICABLE SUBPARAGRAPHS BELOW.

1. AWS D1.1/D1.1M, "Structural Welding Code - Steel."
2. AWS D1.2/D1.2M, "Structural Welding Code - Aluminum."

PARAGRAPH AND SUBPARAGRAPHS BELOW DESCRIBE MOCKUPS WHICH ARE CONSTRUCTED AS PART OF THE BUILDING. IF A SEPARATE MOCKUP IS NEEDED REVISE LANGUAGE BELOW.

H. Mockups: Build mockups in the building wall to verify selections made under sample submittals and to demonstrate aesthetic effects and set quality standards for fabrication and installation.

INDICATE PORTION OF WALL REPRESENTED BY MOCKUP ON DRAWINGS OR DRAW MOCKUP AS SEPARATE ELEMENT. COORDINATE REQUIREMENTS WITH THOSE IN OTHER SECTIONS SPECIFYING GLAZING AND CLADDING MATERIALS INSTALLED WITH CURTAIN WALLS.

1. Build mockup of wall area as shown on Drawings.
2. Approved mockups may become part of the completed Work if undisturbed at time of Substantial Completion.

RETAIN SUBPARAGRAPH EITHER ABOVE OR BELOW AS APPROPRIATE FOR PROJECT.

3. Approval of mockups does not constitute approval of deviations from the Contract Documents contained in mockups unless Owner and Architect specifically approve such deviations in writing.

RETAIN PARAGRAPH BELOW IF WORK OF THIS SECTION IS EXTENSIVE OR COMPLEX ENOUGH TO JUSTIFY A PREINSTALLATION CONFERENCE.

I. Preinstallation Conference: Conduct conference at Project site. Coordinate meeting with Owner's representative.

J. Field Testing: The Owner’s Testing Laboratory will validate testing of installed curtain wall in the building walls.

K. Source Limitations for Glazed Aluminum Curtain Walls and other Work provided under this section: Obtain from single source from single manufacturer.

1.5 MANUFACTURER TESTING

REVISE EXAMPLE TEST METHODS AND SEQUENCE IN SUBPARAGRAPH BELOW TO SUIT PROJECT AND COORDINATE WITH TESTS REQUIRED IN "PERFORMANCE REQUIREMENTS" ARTICLE. CONSULT MANUFACTURERS AND TESTING AGENCIES FOR GUIDANCE ON APPROPRIATE REQUIREMENTS FOR PROJECT.

A. Preconstruction Testing Program: Perform tests specified in "Performance Requirements" Article on manufacturer's laboratory samples in the following order:

1. Structural-performance preloading at 50 percent of the specified wind-load design pressure when tested according to ASTM E 330.
2. Air infiltration when tested according to ASTM E283.
3. Water penetration under static pressure when tested according to ASTM E 331.

4. Structural performance at design load when tested according to ASTM E 330.
5. Repeat air filtration when tested according to ASTM E 283.
6. Repeat water penetration under static pressure when tested according to ASTM E 331.
7. Structural performance at maximum 150 percent of positive and negative wind-load design pressures when tested according to ASTM E 330.

1.6 PROJECT CONDITIONS

A. Field Measurements: Verify actual locations of structural supports for curtain walls by field measurements before fabrication, and indicate measurements on Shop Drawings.

1.7 WARRANTY

VERIFY AVAILABLE WARRANTIES AND WARRANTY PERIODS FOR CURTAIN WALLS WITH MANUFACTURERS LISTED IN PART 2 ARTICLES. INSTALLER WARRANTIES ARE USUALLY LIMITED TO TWO YEARS; VERIFY AVAILABILITY FOR LONGER PERIODS.

A. Assembly Warranty Terms: Provide a complete parts and labor warranty for a minimum of 10 years from the date of Substantial Completion according to the following terms.

1. Manufacturer agrees to repair or replace components of curtain walls that do not comply with requirements or that fail in materials or workmanship within specified warranty period. Failures include, but are not limited to, the following:
   a. Structural failures including, but not limited to, excessive deflection.
   b. Noise or vibration created by wind and thermal and structural movements.
   c. Water penetration through fixed glazing and framing areas.
   d. Failure of operating components.
   e. Glazing failure, including gasket shrinkage.

B. Fluoropolymer Finish Warranty: Manufacturer agrees to repair finishes or replace aluminum that shows evidence of deterioration of factory-applied fluoropolymer finishes within specified warranty period.

COORDINATE COLOR FADING AND CHALKING LIMITS WITH FINISHES RETAINED IN PART 2.

1. Deterioration includes, but is not limited to, the following:
   a. Color fading more than 5 Hunter units when tested according to ASTM D 2244.
   b. Chalking in excess of a No. 8 rating when tested according to ASTM D 4214.
   c. Cracking, checking, peeling, or failure of paint to adhere to bare metal.

VERIFY AVAILABLE WARRANTIES AND WARRANTY PERIODS FOR FINISHES WITH MANUFACTURERS LISTED IN PART 2 ARTICLES. FLUOROPOLYMER FINISHES ARE ELIGIBLE FOR 10 YEAR WARRANTIES.

2. Warranty Period: 10 years from date of Substantial Completion.

C. Anodized Finish Warranty: Manufacturer agrees to repair finishes or replace aluminum that shows evidence of deterioration of factory-applied anodized finishes within specified warranty period. Any forming or welding must be done prior to finishing.

COORDINATE COLOR FADING AND CHALKING LIMITS WITH FINISHES RETAINED IN PART 2.

1. Deterioration includes, but is not limited to, the following:
   a. Color fading more than 5 Delta-E Hunter units (square root of the sum of square Delta L, Delta a, and Delta b) as determined by ASTM D 2244.
   b. Chalking in excess of a No.8 rating when tested according to ASTM D 4214.
   c. Cracking, checking, flaking, or blistering.
2. Warranty Period: 10 years from date of Substantial Completion.

PART 2 - PRODUCTS

2.1 MANUFACTURERS

SELECT CURTAIN WALL PRODUCTS BASED ON SYSTEM TYPE AND PERFORMANCE WITHIN THE LISTED MANUFACTURERS. NOTE THAT THE FOLLOWING MANUFACTURERS HAVE VARYING PERFORMANCE LEVELS IN THEIR PRODUCT LINES, NOT ALL OF WHICH MEET SECTION PERFORMANCE REQUIREMENTS. BE SURE TO SELECT ONLY THOSE PRODUCT LINES THAT ARE PRESSURE EQUALIZED, UNITIZED CONSTRUCTION.

A. Curtain Wall Manufacturers:

1. EFCO
2. Graham Architectural Products.
3. Harmon, Inc.
4. Kawneer North America; an Alcoa company.
5. Oldcastle BuildingEnvelope.
6. Wausau Window and Wall Systems.

B. Flouropolymer Coating Manufacturers:

1. PPG Industries.
2. Valspar Corp.
3. Akzo Nobel.

2.2 MATERIALS

A. Aluminum: Alloy and temper recommended by manufacturer for type of use and finish indicated.

1. Sheet and Plate: ASTM B 209.
2. Extruded Bars, Rods, Profiles, and Tubes: ASTM B 221
3. Extruded Structural Pipe and Tubes: ASTM B 429.
4. Structural Profiles: ASTM B 308.

RETAIN SUBPARAGRAPH BELOW FOR WELDING.

B. Welding Rods and Bare Electrodes: AWS A5.10/A5.10M.

RETAIN PARAGRAPH BELOW FOR INTERNAL STEEL REINFORCEMENT OF ALUMINUM FRAMING MEMBERS; REVISE TO SUIT PROJECT.

C. Steel Reinforcement components: Provide steel reinforcement as necessary to meet specified performance requirements. Finish steel reinforcement as specified in the "Finishes" article.

1. Structural Shapes, Plates, and Bars: ASTM A 36.
2. Cold-Rolled Sheet and Strip: ASTM A1008.
3. Hot-Rolled Sheet and Strip: ASTM A1011.

D. Brackets and Reinforcements: Manufacturer's standard high-strength aluminum, or nonmagnetic stainless steel units.

E. Provide nonstaining, nonferrous shims for installation and alignment of curtain wall work.

F. Fasteners and Accessories: Provide manufacturer's standard non-corrosive fasteners and accessories compatible with materials used in the framing system and with exposed portions, when unavoidable, that match finish of the curtain wall system. Where movement is expected, provide slip-joint linings of sheets, pads, shims, or washers of fluorocarbon resin or a similar material recommended by the manufacturer.

1. Where fasteners anchor into aluminum less than 0.125-inch thick, provide noncorrosive pressed-in splined grommet nuts or other type reinforcement to receive fastener threads.

G. Anchors: Three-way adjustable anchors with minimum adjustment of 1 inch that accommodate fabrication and installation tolerances in material and finish compatible with adjoining materials and recommended by manufacturer.

RETAIN SUBPARAGRAPH BELOW IF APPLICABLE, OR REVISE TO SUIT PROJECT.

1. Concrete and Masonry Inserts: Hot-dip galvanized steel inserts complying with ASTM A 123 or ASTM A 153 requirements.

2.3 FRAMING

A. Framing Members: Manufacturer's standard extruded- or formed-aluminum framing members of thickness required and reinforced as required to support imposed loads.

B. Construction:

1. Thermally broken.
2. Pressure equalized.
3. Glazing System:
   a. Retained mechanically with gaskets on four sides.
   b. Glazing Plane: Front.

SELECT EITHER UNITIZED OR STICK-BUILT AFTER EVALUATING WHICH IS MORE SUITABLE FOR PROJECT. SEE EDITOR'S NOTES AT BEGINNING OF SECTION.

4. Fabrication Method: [Field-fabricated stick system] [Factory-fabricated unitized system.

C. Pressure Caps: Manufacturer's standard aluminum components that mechanically retain glazing.

1. Include snap-on aluminum trim that conceals fasteners.

D. Concealed Flashing: Dead-soft, 0.018-inch (0.457-mm) thick stainless steel, ASTM A 240 of type recommended by manufacturer.

E. Framing Sealants: Manufacturer's standard sealants according to the Joint Sealants section.

REVIEW PERFORMANCE WITH RESPECT TO U OF M DESIGN GUIDELINES FOR DESIGN AND CONSTRUCTION SID-D "ENERGY AND WATER CONSERVATION" AND RELATED STANDARDS. VALUES INDICATED ARE MINIMUM VALUES FROM ASHRAE 90.1-2007.

2.4 PERFORMANCE REQUIREMENTS

A. General Performance: Provide curtain walls that are designed, manufactured and installed to comply with specified performance requirements. The independent testing laboratory employed by the curtain wall manufacturer shall test curtain walls representing those indicated for this Project in the laboratory. There shall be no failure due to defective manufacture, fabrication, installation, or other defects in construction.

1. Curtain wall shall withstand movements of supporting structure indicated on Drawings, including, but not limited to, story drift, twist, column shortening, long-term creep, and deflection from uniformly distributed and concentrated live loads.
2. Failure includes but is not limited to the following:
   a. Thermal stresses transferring to building structure.
   b. Glass breakage.
   c. Noise or vibration created by wind and thermal and structural movements.
   d. Loosening or weakening of fasteners, attachments, and other components.
   e. Failure of operating units.

NOTE THAT THE FOLLOWING INFORMATION AS DETERMINED BY PROJECT'S STRUCTURAL ENGINEER MUST BE SHOWN ON DRAWINGS.

B. Structural Loads: As indicated on Drawings.

VERIFY THAT MANUFACTURERS HAVE TESTED ASSEMBLIES ACCORDING TO SPECIFIED TEST METHODS AND CAN MEET CRITERIA SPECIFIED. ASSEMBLIES SHALL BE TESTED FOR STRUCTURAL PERFORMANCE, AIR INFILTRATION, AND WATER PENETRATION UNDER STATIC PRESSURE.

C. Structural Performance

1. Structural-Test Performance: Test according to ASTM E 330 as follows:
   a. No evidence of deflection exceeding specified limits when tested at positive and negative wind-load design pressures.

b. No evidence of material failures, structural distress, and permanent deformation of main framing members exceeding 0.2 percent of span when assemblies, including anchorages, are tested at 150 percent of positive and negative wind-load design pressures, assemblies, including anchorage.

VERIFY DURATION OF TEST PERFORMANCE WITH STRUCTURAL ENGINEER.

c. Test Duration: As required by design wind velocity, but not less than 10 seconds.

BASED ON PROJECT CONDITIONS, MORE STRINGENT DEFLECTION CRITERIA THAN SPECIFIED IN SUBPARAGRAPHS BELOW MAY BE REQUIRED.

2. Deflection of Framing Members: At design wind pressure, as follows:
   a. Deflection Normal to Wall Plane: No deflection of any unsupported span L of test specimen (framing rails, muntins, mullions, etc.) in excess of L/175 when tested according to ASTM E330 (maximum L/240 plus 1/4 inch at spans over 13 feet 6 inches; 2L/175 at unsupported cantilevers).

OPTION IN SUBPARAGRAPH BELOW IS BASED ON TYPICAL DEFLECTION CRITERIA FOR GLASS.

   b. Deflection Parallel to Glazing Plane: Limited to L/360 of clear span or 1/8 inch, whichever is smaller.

DELETE SUBPARAGRAPH BELOW IF NO OPERABLE WINDOWS OR DOORS.

   c. Operable Units: Provide a minimum 1/16-inch clearance between framing members and operable units.

RETAIN PARAGRAPH BELOW IF REQUIRED BY PROJECT. WIND EVENTS MAY CREATE OVERTURNING MOMENTS THAT CAUSE DIFFERENTIAL LATERAL DISPLACEMENT (DEFLECTION) OF MULTISTORY BUILDINGS. STRUCTURAL ENGINEER SHALL CALCULATE DESIGN DISPLACEMENT AND INDICATE ON THE DRAWINGS.

3. Story Drift: Accommodate design displacement of adjacent stories indicated.
   a. Design Displacement: As indicated on structural Drawings.

REVISE SUBPARAGRAPH BELOW TO SUIT PROJECT.

   b. Test Performance: Meeting criteria for passing based on building occupancy type when tested according to AAMA 501.4 at design displacement and 1.5 times the design displacement.

RETAIN PARAGRAPH BELOW FOR STATIC-PRESSURE METHOD, WHICH IS MOST FREQUENTLY SPECIFIED. BOTH STATIC AND DYNAMIC TESTING MAY BE REQUIRED OR DESIRED FOR CERTAIN DESIGNS, PARTICULARLY THOSE INCORPORATING SPECIAL WATER-DRAINAGE FEATURES SUCH AS RAIN SCREEN WALLS. REVIEW AND EDIT PRESSURE LIMITS BASED ON PROJECT CONDITIONS AND WALL DESIGN.

D. Energy Performance

1. Water Penetration under Static Pressure: No evidence of water penetration through fixed glazing and framing areas, as defined in AAMA 501, when tested according to ASTM E 331 at a minimum static-air-pressure differential of 20 percent of positive wind-load design pressure, but not less than 12 pounds per square foot
2. Thermal Movements: Allow for thermal movements resulting from the following maximum change (range) in ambient and surface temperatures:
   a. Temperature Change (Range): 120 deg F (67 deg C), ambient; 180 deg F (100 deg C), material surfaces.
   b. Test Interior Ambient-Air Temperature: 75 deg F.
3. Solar Heat Gain Coefficient (SHGC): No greater than 0.40 for the assembly as determined according to NFRC 200.

CR SHOWN BELOW IS VALUE USED ON RECENT HOSPITAL PROJECT. ESTABLISH CR BASED ON BUILDING OCCUPANCY FACTORS ACCORDING TO MECHANICAL DESIGN GUIDELINES.

4. Condensation Resistance: Provide units tested for thermal performance according to AAMA 1503 showing a condensation resistance factor (CR) of 60.

SELECT ABOVE OR BELOW. ABOVE PUTS RESPONSIBILITY ON DESIGNER. BELOW PUTS RESPONSIBILITY ON MANUFACTURER. ESTABLISH CR (ABOVE) OR DESIGN VALUES (BELOW) BASED ON BUILDING OCCUPANCY FACTORS ACCORDING TO MECHANICAL DESIGN GUIDELINES.

5. Condensation Resistance: Provide units tested for thermal performance according to AMMA 1503 showing a condensation resistance (CR) such that there shall be no formation of condensation in any form on glazing and framing.

INSERT PROJECT SPECIFIC DESIGN VALUES BELOW. CONSULT WITH MECHANICAL ENGINEER FOR PROJECT TEMPERATURE AND HUMIDITY REQUIREMENTS.

   a. Design temperature:
      1) Winter: []
      2) Summer: []
   b. Humidity:
      1) Winter: []
      2) Summer: []
6. Thermal Transmittance (U-factor) for Assembly:
   a. Fixed glazing and framing areas: U-factor of not more than 0.45 Btu/sq. ft. x h x deg F as determined according to NFRC 100.
   b. Operable window glazing and framing areas: U-factor of not more than 0.55 Btu/sq. ft. x h x deg F as determined according to NFRC 100.
7. Air Infiltration: Air infiltration shall not exceed 0.06 cfm per sq. ft. of wall area when tested in accordance with ASTM E 283 at a minimum pressure differential of 6.24 psf.

RETAIN PARAGRAPH AND SUBPARAGRAPH BELOW ONLY IF REQUIRED FOR PROJECT. NOT NECESSARY FOR MOST PROJECTS.

8. Sound Transmission: Provide curtain wall with fixed glazing and framing areas having the following sound-transmission characteristics:

EDIT TO BE PROJECT SPECIFIC - VALUES ARE EXAMPLES ONLY.

a. Outdoor-Indoor Transmission Class: Minimum [26] [30] [34] <Insert number> when tested for laboratory sound transmission loss according to ASTM E 90 and determined by ASTM E 1332.

2.5 GLAZING

A. General: Comply with the Division 08 Section "Glazing".

WET/DRY GLAZING SYSTEM IS PREFERRED FOR SUPERIOR WEATHER PERFORMANCE.

B. Provide manufacturer's standard glazing system which has been tested to meet performance requirements

1. Glazing Gaskets:
   a. Manufacturer's standard sealed-corner pressure-glazing system of black, resilient elastomeric glazing gaskets, setting blocks, and shims or spacers.
   b. Non-shrinking, weather-resistant, and compatible with all materials in contact.

2.6 SPANDRELS

A. Provide spandrel glass in insulating units as specified in the Division 08 Section "Glazing".

2.7 OPERABLE WINDOWS AND DOORS

RETAIN THIS ARTICLE IF OPERABLE WINDOWS OR ALUMINUM ENTRANCE DOORS ARE REQUIRED BY PROJECT.

A. Operable Windows: Comply with Division 08 Section "Aluminum Windows."

B. Aluminum Entrance Doors: Comply with Division 08 Section "Aluminum-Framed Entrances and Storefronts."

2.8 ACCESSORY MATERIALS

A. Bituminous Paint: Cold-applied asphalt-mastic paint complying with SSPC-Paint 12 requirements except containing no asbestos, formulated for 30-mil (0.762-mm) thickness per coat.

2.9 FABRICATION

A. Form or extrude aluminum shapes before finishing.

RETAIN PARAGRAPH BELOW FOR WELDING.

B. Weld in concealed locations to greatest extent possible to minimize distortion or discoloration of finish. Remove weld spatter and welding oxides from exposed surfaces by descaling or grinding.

C. Fabricate components that, when assembled, have the following characteristics:

1. Profiles that are sharp, straight, and free of defects or deformations.
2. Accurately fitted joints with ends coped or mitered.
3. Physical and thermal isolation of glazing from framing members. If a poured thermal break is utilized, install back-up mechanical attachment of the two halves of the frame.
4. Accommodations for thermal and mechanical movements of glazing and framing to maintain required glazing edge clearances.
5. Provisions for field replacement of glazing for vision glass and spandrel glazing.

REVISE SUBPARAGRAPH BELOW FOR SAFETY RAILINGS, IF ANY. INCLUDE LOAD REQUIREMENTS. INDICATE ON DRAWINGS.

6. Provisions for safety railings mounted [on interior face of mullions] [between mullions at interior].
7. Fasteners, anchors, and connection devices that are concealed from view to greatest extent possible.

D. Fabricate components that have the following characteristics:

1. Pressure-equalized system with primary air and vapor barrier at interior side of glazed aluminum wall and secondary seal weeped and vented to exterior.

E. Curtain-Wall Framing: Fabricate components for assembly using manufacturer's pressure plate with snap-on covers.

DELETE PARAGRAPH AND SUBPARAGRAPHS BELOW IF STICK-BUILT SYSTEM IS SELECTED.

F. Factory-Assembled Frame Units:

1. Rigidly secure nonmovement joints.
2. Seal joints watertight unless otherwise indicated.
3. Install glazing to comply with requirements in the "Glazing" Section.

G. After fabrication, clearly mark components to identify their locations in Project according to Shop Drawings.

INSERT INTEGRAL STABILIZATION REQUIREMENTS FOR DESCENT-CONTROL EQUIPMENT USED FOR MAINTENANCE, IF ANY.

2.10 FINISHES, GENERAL

A. Comply with referenced AAMA Voluntary Specifications for detailed finish requirements.

COORDINATE THE FOLLOWING PARAGRAPH WITH THE ALUMINUM ENTRANCES AND STOREFRONTS AND ALUMINUM WINDOWS SECTIONS. SPECIFY FINISH REQUIREMENTS FOR ALUMINUM ENTRANCES AND STOREFRONTS, AND ALUMINUM WINDOWS, IN THIS SECTION. DELETE IF THERE ARE NO ENTRANCES AND STOREFRONTS, OR ALUMINUM WINDOWS.

B. Finish aluminum windows and entrances to match the curtain wall system. Division 08 Sections "Aluminum-Framed Entrances and Storefronts" and "Aluminum Windows" shall comply with this Section for finish requirements.

2.11 FLUOROPOLYMER ALUMINUM FINISHES

RETAIN FINISHES IN PARAGRAPHS BELOW TO SUIT PROJECT. FLUOROPOLYMER FINISHES ARE PREFERRED BY THE U OF M.

IF RETAINING MORE THAN ONE, INDICATE LOCATION OF EACH ON DRAWINGS BY TYPE. COORDINATE WITH DESIGNATIONS IN THIS SECTION. ALUMINUM-FRAMING SYSTEMS ARE AVAILABLE WITH DUAL FINISHES, ALLOWING DIFFERENT INTERIOR AND EXTERIOR COLOR FINISHES. REFER TO CURTAIN WALL MANUFACTURER'S DATA FOR ADDITIONAL INFORMATION.

RETAIN ONE OF TWO PARAGRAPHS BELOW; IF BOTH ARE REQUIRED, INDICATE LOCATION OF EACH SYSTEM ON DRAWINGS, IN SCHEDULES, OR BY INSERTS. IF SPECIFIC PRODUCTS ARE REQUIRED, NAME COATING MANUFACTURERS AND PRODUCTS.

A. High-Performance Organic Finish: Two-coat fluoropolymer finish complying with AAMA 2605 and containing not less than 70 percent PVDF resin by weight in color coat. Prepare, pretreat, and apply coating to metal surfaces to comply with coating and resin manufacturers' written instructions.

TYPICALLY, ONLY USE THREE-COAT FLUOROPOLYMER FINISH WITH METALLIC FINISHES.

B. High-Performance Organic Finish: three-coat fluoropolymer finish complying with AAMA 2605 and containing not less than 70 percent PVDF resin by weight in both color coat and clear topcoat. Prepare, pretreat, and apply coating to exposed metal surfaces to comply with coating and resin manufacturer's written instructions.

RETAIN COLOR BELOW, OR SELECT OTHER COLOR AS APPROVED BY THE OWNER.

C. Color and Gloss: Non-metallic solid color, dark bronze; low gloss, as selected by Architect from manufacturer's standards.

D. Field Touch-Up Materials: Fluoropolymer coating produced specifically for field touch-up work by same manufacturer as shop applied coating.

2.12 ANODIC ALUMINUM FINISHES

A. Class I Clear Anodized Finish: Anodic Coating: Class I Architectural, clear film thicker than 0.7 mil, complying with AAMA 611.

RETAIN THE PARAGRAPH ABOVE IF CLEAR FINISH IS REQUIRED, OR THE PARAGRAPH BELOW IF A COLOR ANODIZED FINISH IS DESIRED.

B. Class I Color Anodized Finish: Class I Architectural, film thicker than 0.7 mil with integral color or electrolytically deposited color, complying with AAMA 611.

SELECT COLOR BELOW OR MODIFY WHEN APPROVED BY THE OWNER.

1. Color: Dark bronze.

C. Perform any forming or welding prior to applying finishes.

2.13 STEEL FINISHES

A. Manufacturer's standard zinc-rich, corrosion-resistant primer complying with SSPC-PS Guide No. 12.00; applied immediately after surface preparation and pretreatment. Select surface preparation methods according to recommendations in SSPC-SP COM and prepare surfaces according to applicable SSPC standard.

PART 3 - EXECUTION

3.1 EXAMINATION AND PREPARATION

A. Examine areas, with Installer present, for compliance with requirements for installation tolerances and other conditions affecting performance of the Work.

B. Proceed with installation only after unsatisfactory conditions have been corrected.

3.2 INSTALLATION

A. General:

1. Comply with manufacturer's written instructions.
2. Do not install damaged components.
3. Fit joints to produce hairline joints free of burrs and distortion.
4. Rigidly secure nonmovement joints.
5. Install anchors with separators and isolators to prevent metal corrosion and electrolytic deterioration, and to prevent impeding movement of moving joints.
6. Seal joints watertight, unless otherwise indicated or required by installation conditions.

B. Metal Protection:

1. Where aluminum will contact dissimilar metals, protect against galvanic action by painting contact surfaces with primer or by applying sealant or tape or installing nonconductive spacers as recommended by manufacturer for this purpose.
2. Where aluminum will contact concrete or masonry, protect against corrosion by painting contact surfaces with bituminous paint.

C. Install components to provide continuous water and condensate drainage to exterior.

D. Install components plumb and true in alignment with established lines and grades and located in reference to column lines and floor levels.

RETAIN PARAGRAPH BELOW FOR OPERABLE UNITS (DOORS AND WINDOWS).

E. Install operable units level and plumb, securely anchored, and without distortion. Adjust weather-stripping contact and hardware movement to produce proper operation.

RETAIN PARAGRAPH BELOW ONLY IF SOME OR ALL OF THE CURTAIN WALL WILL BE FIELD GLAZED. FACTORY GLAZING IS COVERED IN PART 2.

F. Install glazing as specified in the Division 08 Section "Glazing" and as recommended by the Curtain Wall Manufacturer. Install glazing gaskets without gaps to eliminate shrinkage.

3.3 ERECTION TOLERANCES

A. Erection Tolerances: Install curtain wall to comply with the following maximum tolerances:

ERECTION TOLERANCES IN SUBPARAGRAPHS BELOW ARE EXAMPLES ONLY THAT ARE BASED ON VARIOUS AAMA REFERENCES. COORDINATE WITH TOLERANCES FOR SUPPORT SYSTEMS AND REVISE TO SUIT PROJECT.

1. Plumb: 1/8 inch in 10 feet); 1/4 inch in 40 feet.
2. Level: 1/8 inch in 20 feet; 1/4 inch in 40 feet.
3. Alignment:
   a. Where surfaces abut in line or are separated by reveal or protruding element up to 1/2 inch wide, limit offset from true alignment to 1/16 inch.
   b. Where surfaces are separated by reveal or protruding element from 1/2 to 1 inch wide, limit offset from true alignment to 1/8 inch.
   c. Where surfaces are separated by reveal or protruding element of 1 inch wide or more, limit offset from true alignment to 1/4 inch.
   d. Location: Limit variation from plane to 1/8 inch in 12 feet; 1/2 inch over total length.

3.4 FIELD QUALITY CONTROL

RETAIN PARAGRAPHS BELOW TO DESCRIBE TESTS AND INSPECTIONS PERFORMED BY THE INDEPENDENT TESTING AGENCY EMPLOYED BY THE OWNER. RETAIN "FIELD QUALITY-CONTROL REPORTS" PARAGRAPH IN "SUBMITTALS" ARTICLE.

A. Testing Agency: Owner will engage a qualified testing agency for witnessing field testing, determining that the tests are performed correctly and making the final determination whether the curtain wall has successfully passed the tests.

B. Testing Activities: Testing and inspection of representative areas of curtain wall as installation proceeds to determine compliance of installed assemblies with specified requirements. Owner will determine locations and timing of testing.

C. Contractor shall coordinate with Testing Agency and provide the materials, equipment and labor necessary to complete the testing.

EDIT TEST AREAS AS REQUIRED.

D. The following tests will be performed in accordance with the methods and standards specified in the Performance Requirements article in Part Two of this Section:

1. Air Infiltration Tests.
2. Water Penetration Tests.

3. Water Spray Test: Before installation of interior finishes has begun.

E. Test Area: Three locations as determined by Owner; one bay wide, but not less than 30 feet, by one story of glazed aluminum curtain wall.

F. Curtain walls will be considered defective if they do not pass tests and inspections.

G. If test area fails to meet the specified air infiltration or water penetration requirements, Contractor shall submit description of proposed remedial work for Owner and Architect's information.

1. Remedial work shall be incorporated into the test specimen for retesting.
2. For each area which fails field testing, one additional area of equal size shall be tested for both air infiltration and water penetration.
3. Cost of testing of additional areas shall be responsibility of Contractor.

H. Remedial work which results in successful retesting of test specimen shall be incorporated in installed system for entire Project.

I. Testing agency shall submit copies of test reports to Owner, Architect and Contractor within 48 hours after date of test.

J. The Owner reserves the right to select additional test areas as required, without limitation, subject to correction and remediation as specified herein.

3.5 COMMISSIONING

A. Perform the commissioning activities as outlined in the Division 01 Section "Full Project Commissioning" or "Project Commissioning for Small Projects" and other requirements of the Contract Documents.

3.6 ADJUSTING, CLEANING, PROTECTION

A. Clean the completed system, inside and out, promptly after erection and installation of glass and sealants, allowing for nominal curing of liquid sealants. The installer shall advise the Contractor of proper and adequate procedures for protection and cleaning during the remainder of the construction period so that the system will be without damage and deterioration at the time of acceptance.

B. At the time of Final Acceptance, clean curtain wall system thoroughly and polish glass. Demonstrate proper cleaning methods and materials to the Owner's maintenance personnel.

C. Protect completed curtain wall system throughout construction period through Final Acceptance.

END OF SECTION 084413

UNIVERSITY OF MICHIGAN
ARCHITECTURE, ENGINEERING AND CONSTRUCTION

ARCHITECTURE & ENGINEERING
326 East Hoover, Mail Stop B
Ann Arbor, MI 48109-1002
Phone: 734-764-3414
Fax: 734-936-3334

BuildingName
The Description of the Project
P00000000 0000

SPECIFICATION DIVISION 8

NUMBER SECTION DESCRIPTION

DIVISION 08 OPENINGS
SECTION 085113 - ALUMINUM WINDOWS

END OF CONTENTS TABLE

DIVISION 08 OPENINGS
SECTION 085113 - ALUMINUM WINDOWS

REVISED JUNE 2011 TO TIGHTEN PERFORMANCE REQUIREMENTS TO MEET ASHRAE.

PART 1 - GENERAL

1.1 RELATED DOCUMENTS

A. Drawings and general provisions of the Contract, including Standard General Conditions, Supplemental General Conditions, Division 01 Specification Sections, and other applicable Specification Sections, apply to this Section.

INSERT SPECIAL WINDOW TYPES SUCH AS SOUND INSULATING WINDOWS, SOLAR SHADING WINDOWS OR EMERGENCY ACCESS/EGRESS WINDOWS IF REQUIRED FOR SPECIAL PROJECT APPLICATIONS.

REVISE LIST BELOW TO SUIT PROJECT.

B. Related Sections:

1. Division 07 Section: Air Barriers.
2. Division 07 Section: Flashing and Sheet Metal.
3. Division 08 Section "Aluminum-Framed Entrances and Storefronts."
4. Division 08 Section "Glazed Aluminum Curtain Walls."

1.2 SUMMARY

A. Section includes:

1. Architectural Performance Class AW aluminum window units and related work as indicated on the Drawings.

WINDOW TYPES LISTED BELOW ARE COMMONLY USED AT THE UNIVERSITY. CONSULT MANUFACTURER'S LITERATURE AND AAMA 101 FOR ADDITIONAL TYPES.

DELETE WINDOW TYPES THAT ARE NOT REQUIRED.

   a. Casement windows.
   b. Double-hung windows.
   c. Top-hinged windows.
   d. Projected windows.
   e. Fixed windows.

2. Delegated Design: Aluminum windows designed by the manufacturer to comply with specified performance requirements and design criteria, including structural analysis data signed and sealed by the qualified Professional Engineer

B. Work Provided Under This Section But Specified Under Other Sections:

1. The Work of this Section and applicable portions of the work of the following Sections, that are related to this Section, shall be performed by a Prime contractor providing window products, to establish single source responsibility for aluminum windows and associated components.
   a. Division 07 Section "Joint Sealants."
   b. Division 08 Section "Glazing."

1.3 SUBMITTALS

USUALLY RETAIN ALL BELOW.

A. Product data for each type of window required, including:

1. Construction details and fabrication methods.
2. Profiles and dimensions of individual components.
3. Data on hardware, accessories, and finishes.
4. Recommendations for maintenance and cleaning of exterior surfaces.

USUALLY RETAIN ALL BELOW.

B. Shop drawings for each type of window required. Include information not fully detailed in manufacturer's standard product data and the following:

DELETE REQUIREMENTS FROM THE LIST BELOW THAT ARE NOT REQUIRED.

1. Layout and installation details, including anchors.
2. Elevations at 1/4-inch = 1 foot scale and typical window unit elevations at 3/4-inch = 1 foot scale.
3. Full-size section details of typical composite members, including reinforcement and stiffeners.
4. Location of weep holes.
5. Panning details
6. Hardware including operators.
7. Glazing details.
8. Accessories.

C. Delegated-Design Submittal: For windows indicated to comply with performance requirements and design criteria, including analysis data signed and sealed by the qualified Professional Engineer responsible for their preparation.

EDIT FOR OTHER COLOR SELECTIONS.

EDIT FOR FINISHES SELECTED. DELETE FINISHES THAT ARE NOT USED.

D. Samples for Initial Color Selection: Submit samples of each specified finish as indicated below.

1. Fluoropolymer Coatings: Submit samples consisting of actual coating chips and displaying manufacturer's range of colors for initial selection, including black and 3 additional non-metallic color choices closely approximating dark bronze anodized finish. Photographs or color printing are not acceptable.

2. Anodized Coatings: Submit pairs of samples of the specified finish on 4-inch-long sections of aluminum extrusions. Include sample sets showing the full range of variations in color normally expected.

E. Energy Performance Certificates: For windows, accessories, and components, from manufacturer.

1. Basis for Certification: NFRC-certified energy performance values for each window type.

F. Test reports: Provide certified test reports from a qualified independent testing agency indicating that each type and size of window unit has been tested in accordance with specified test procedures and complies with each performance requirement indicated. Test results based on use of down-sized test units will not be accepted.

G. Manufacturer's certification of compliance with requirements of the specified performance requirements of this Section.

H. Field quality-control reports are submitted by Owner's Independent testing Agency.

I. Signed original warranty documents from the window manufacturer indicating the specified terms and conditions for each window and component.

1.4 QUALITY ASSURANCE

A. Manufacturers and Products: The products and manufacturers specified in this Section establish the standard of quality for the Work. Subject to compliance with all requirements, provide specified products from the manufacturers named in Part 2.

B. Reference Standards: Products in this section shall be built, tested, and installed in compliance with the specified quality assurance standards; latest editions, unless noted otherwise.

1. Applicable standards of the American Architectural Manufacturers Association (AAMA), including but not limited to:
   a. AAMA/WDMA/CSA 101/I.S.2/A440 Voluntary Performance Specification for Windows, Skylights and Glass Doors – A North American Fenestration Standard.
   b. AAMA 1503- Voluntary Test Method for Thermal Transmittance and Condensation Resistance of Windows, Doors and Glazed Wall Sections
   c. AAMA 2605 Voluntary Specification, Performance Requirements and Test Procedures for Superior Performing Organic Coatings on Aluminum Extrusions and Panels.
   d. AAMA 611 Voluntary Specification for Anodized Architectural Aluminum.
   e. AAMA 901 Voluntary Specification for Rotary & Linear Operators in Window Applications.
   f. AAMA 902 Voluntary Specification for Sash Balances.
   g. AAMA 910 Voluntary Life Cycle Specifications and Test Methods for AW Class Architectural Windows and Doors.
   h. AAMA 505 Dry Shrinkage Performance and Composite Thermal Cycling Test Procedure.

2. Standards of ASTM International which are referenced in other Articles in this Section.
3. National Fenestration Rating Council (NFRC) Documents and Rating System, including, but not limited to:
   a. NFRC 100 Procedure for Determining Fenestration Product U-factors.
   b. NFRC 200 Procedure for Determining Fenestration Product Solar Heat Gain Coefficient and Visible Transmittance at Normal Incidence.
   c. NFRC 500-2010 Procedure for Determining Fenestration Product Condensation Resistance Values.

THE WIND PRESSURES ACTING ON THE WALLS MUST BE CALCULATED BY THE STRUCTURAL ENGINEER AND INDICATED ON THE DRAWINGS AT CORNERS AND CENTERS OF WALLS FOR PROPER WALL, WINDOW AND CURTAIN WALL DESIGNS, AS APPLICABLE.

C. Delegated Design: A qualified Professional Engineer registered in Michigan, employed by the window manufacturer, shall design aluminum windows, and all accessories, for this project. The windows shall be manufactured, assembled and installed to withstand the structural load requirements as specified in this Section, and according to the Building Code. Expected loads calculated for the building, based on the wind load data indicated on the Drawings. Refer to Part 2 Performance Requirements for additional information.

D. Installer Qualifications: Engage an experienced Installer who has completed installation of aluminum windows similar in design and extent to those required for the project and whose work has resulted in construction with a record of successful in-service performance.

E. Single-Source Responsibility: Obtain aluminum window units from one source and by a single manufacturer.

F. Manufacturer Qualifications: A manufacturer capable of fabricating aluminum windows that meet or exceed specified performance requirements and of documenting this performance by certification and labeling.

G. Manufacturer's Preconstruction Testing Agency Qualifications: Qualified according to ISO/IEC 17025 and accredited by ICC-ES for preconstruction testing indicated.

H. Product Options: The drawings indicate the size, profiles, and dimensional requirements, and aesthetic effects of aluminum windows and are based on products of a specific manufacturer. Aluminum windows by indicated approved manufacturers will be considered, provided deviations in dimensions and profiles are minor and do not alter the aesthetic effect as judged by the Owner and Architect. The burden of proof of equality is on the proposer.

I. Tested Units: Provide window units that were successfully tested by a qualified independent testing laboratory, for the window manufacturer, to demonstrate compliance with specified standards.

J. Field Testing: The Owner's independent Testing Laboratory will validate testing of windows installed in the building.

1.5 MANUFACTURER TESTING

REVISE EXAMPLE TEST METHODS AND SEQUENCE IN SUBPARAGRAPH BELOW TO SUIT PROJECT AND COORDINATE WITH TESTS REQUIRED IN "PERFORMANCE REQUIREMENTS" ARTICLE. CONSULT MANUFACTURERS AND TESTING AGENCIES FOR GUIDANCE ON APPROPRIATE REQUIREMENTS FOR PROJECT.

A. Preconstruction Testing Program: Perform tests specified in "System Performance Requirements" Article on manufacturer's laboratory samples in the following order:

1. Structural-performance preloading at 50 percent of the specified wind-load design pressure when tested according to ASTM E 330.
2. Air infiltration when tested according to ASTM E283.
3. Water penetration under static pressure when tested according to ASTM E 331.
4. Structural performance at design load when tested according to ASTM E 330.
5. Repeat air filtration when tested according to ASTM E 283.
6. Repeat water penetration under static pressure when tested according to ASTM E 331.
7. Structural performance at maximum 150 percent of positive and negative wind-load design pressures when tested according to ASTM E 330.

1.6 PROJECT CONDITIONS

A. Field Measurements: Check actual window openings by accurate field measurements before fabrication and show recorded measurements on shop drawings. Coordinate fabrication schedule with construction progress to avoid delay of the Work.

1. Where field measurements cannot be made without delaying the Work, guarantee opening dimensions and proceed with fabricating aluminum windows without field measurements. Coordinate construction to ensure that actual opening dimensions correspond to guaranteed dimensions.

GLASS WARRANTY IS SPECIFIED IN THE GLAZING SECTION.

NOTE THAT STANDARD WARRANTY IS FREQUENTLY 5 YEARS, WITH 10 YEARS BEING AN OPTION AVAILABLE AT ADDITIONAL CHARGE.

1.7 WARRANTY

A. Assembly Warranty: Provide a complete parts and labor warranty for a minimum of 10 years from the date of Substantial Completion according to the following terms.

1. Manufacturer agrees to repair or replace components of aluminum windows that do not comply with requirements or that fail in materials or workmanship within specified warranty period. Failures include, but are not limited to, the following:
   a. Structural failures including, but not limited to, excessive deflection.

b. Noise or vibration created by wind and thermal and structural movements.
c. Water penetration through fixed glazing and framing areas.
d. Failure of operating components.
e. Glazing failure, including gasket shrinkage.
f. Glass defects and failure as specified in the Glazing Section.

RETAIN APPLICABLE WARRANTIES FOR PROJECT.

B. Fluoropolymer Finish Warranty: Manufacturer agrees to repair finishes or replace aluminum that shows evidence of deterioration of factory-applied fluoropolymer finishes within specified warranty period.

1. Deterioration includes, but is not limited to, the following:
   a. Color fading more than 5 Hunter units when tested according to ASTM D 2244.
   b. Chalking in excess of a No.8 rating when tested according to ASTM D 4214.
   c. Cracking, checking, peeling, or failure of paint to adhere to bare metal.

VERIFY AVAILABLE WARRANTIES AND WARRANTY PERIODS FOR FINISHES WITH MANUFACTURERS LISTED IN PART 2 ARTICLES. FLUOROPOLYMER FINISHES ARE ELIGIBLE FOR 10 YEAR WARRANTIES.

2. Warranty Period: 10 years from date of Substantial Completion.

C. Anodized Finish Warranty: Manufacturer agrees to repair finishes or replace aluminum that shows evidence of deterioration of factory-applied anodized finishes within specified warranty period. Any metal forming or welding must be done prior to finishing.

1. Deterioration includes, but is not limited to, the following:
   a. Color fading more than 5 Delta-E Hunter units (square root of the sum of square Delta L, Delta a, and Delta b) as determined by ASTM D 2244.
   b. Chalking in excess of a No.8 rating when tested according to ASTM D 4214.
   c. Cracking, checking, flaking, or blistering.
2. Warranty Period: 10 years from date of Substantial Completion.

PART 2 - PRODUCTS

2.1 MANUFACTURERS

A. Acceptable Window Manufacturers:

SELECT WINDOW DESIGN BASED ON PERFORMANCE WITHIN THE LISTED MANUFACTURERS. THE FOLLOWING MANUFACTURERS OFFER FIXED AND OPERABLE WINDOW UNITS THAT MEET SPECIFIED PERFORMANCE LEVELS. VERIFY PERFORMANCE LEVELS FOR VARIOUS UNIT TYPES AND SIZES IN

THE PROJECT BECAUSE NOT ALL PRODUCT LINES AND SIZES FROM THE MFRS BELOW MEET THE PERFORMANCE SPECIFICATIONS.

REVIEW NFRC WEBSITE FOR LISTING OF WINDOWS CERTIFIED TO MEET PERFORMANCE STANDARDS.

1. Graham Architectural Products.
2. Kawneer Company, Inc.
3. Wausau Window and Wall Systems.
4. Traco.

B. Acceptable Fluoropolymer Coating Manufacturers:

1. PPG Industries.
2. Valspar Corp.
3. Akzo Nobel.

2.2 PERFORMANCE REQUIREMENTS

PRIMARY ENERGY PERFORMANCE REQUIREMENTS INCLUDE THERMAL TRANSMITTANCE (U-FACTOR), SOLAR HEAT GAIN COEFFICIENT, AND AIR INFILTRATION AS DEFINED BY ASHRAE/IESNA 90.1-2007. RELATED AND ADDITIONAL ENERGY PERFORMANCE CONSIDERATIONS INCLUDE CONDENSATION RESISTANCE AND VISIBLE LIGHT TRANSMITTANCE. OPTIONS IN SUBPARAGRAPHS BELOW ARE EXAMPLES ONLY. REVISE VALUES TO SUIT BUILDING ENVELOPE AS DEFINED BY ASHRAE/IESNA 90.1-2007. REVIEW PERFORMANCE WITH RESPECT TO U OF M DESIGN GUIDELINES FOR DESIGN AND CONSTRUCTION SID-D "ENERGY AND WATER CONSERVATION" AND RELATED STANDARDS. COORDINATE WITH DIVISION 08 SECTION "GLAZING".

A. Provide aluminum windows engineered, fabricated, and installed to withstand normal thermal movement, wind loading, and impact loading without failure, as demonstrated by testing manufacturer's standard window assemblies representing types, classes, grades, and sizes required for Project according to test methods indicated.

CONSULT WITH STRUCTURAL ENGINEER TO DETERMINE PROPER PERFORMANCE GRADE, WHICH IS BASED UPON WIND SPEED AND EXPOSURE CATEGORY.

B. Provide aluminum windows that comply with AAMA/WDMA/CSA 101 Performance Class AW and Performance Grade [ ].

ALWAYS RETAIN PARAGRAPH BELOW.

C. Factory testing indicated in paragraphs below shall demonstrate compliance with requirements indicated in AAMA 101 for air infiltration, water penetration, structural, and thermal performance for type, grade, and performance class of window units required. Where required design pressure exceeds the minimum for the specified window grade, comply with requirements of AAMA 101, Section 3, "Optional Performance Classes," for higher than minimum performance class.

D. Air infiltration: Maximum 0.4 cfm per square foot at 6.24 psf pressure differential when tested in accordance with ASTM E283.

E. Water Penetration:

1. No uncontrolled water leakage at 12.00 psf static pressure differential, with water application rate of 5 gallons/hr/sq ft when tested in accordance with both ASTM E331 and ASTM E547. Repeat static water test after application of design test pressures.

NOTE THAT THE FOLLOWING INFORMATION AS DETERMINED BY PROJECT'S STRUCTURAL ENGINEER MUST BE SHOWN ON DRAWINGS.

F. Structural:

1. Structural Loads: As indicated on Drawings.
2. Uniform Load Deflection Test
   a. No deflection of any unsupported span L of test unit (framing rails, muntins, mullions, etc.) in excess of L/175 at both a positive and negative load of design test pressure psf) when tested in accordance with ASTM E330.
3. Uniform Load Structural Test:
   a. Unit to be tested at 1.5 times design test pressure, both positive and negative, acting normal to plane of wall in accordance with ASTM E330.
   b. No glass breakage; permanent damage to fasteners, hardware parts, or anchors; damage to make windows inoperable; or permanent deformation of any main frame or ventilator member in excess of 0.2 percent of its clear span.

G. Thermal:

1. Thermal Transmittance (U-factor) Fixed glazing and Framing Areas: U-factor of not more than 0.55 Btu/sq. ft. x h x deg F as determined according to NFRC 100.
2. Thermal Transmittance (U-factor) Operable Window Glazing and Framing Areas: U-factor of not more than 0.55 Btu/sq. ft. x h x deg F as determined according to NFRC 100.
3. Solar Heat Gain Coefficient (SHGC): Fixed glazing and framing areas shall have a solar heat gain coefficient of no greater than 0.40 as determined according to NFRC 200.
4. Condensation Resistance: Provide units tested for thermal performance according to AAMA 1503 showing a condensation resistance factor (CR) of 60.

SELECT ABOVE OR BELOW. ABOVE PUTS RESPONISIBILITY ON DESIGNER AND NEEDS TO BE CONFIRMED BASED UPON BUILDING OOCCUPANCY FACTORS AND SHOULD BE VERIFIED WITH MECHANICAL ENGINEER. BELOW PUTS RESPONSIBILITY ON MANUFACTURER.

CRF CALCULATOR TOOL IS AVAILABLE AT:

HTTP://AAMANET.ORG/CRFCALCULATOR/1/334/CONDENSATION-RESISTANCE-FACTOR-TOOL

5. Condensation Resistance: Provide units tested for thermal performance according to AMMA 1503 showing a condensation resistance factor (CRF) such that there shall be no formation of condensation in any form on glazing and framing.

INSERT PROJECT SPECIFIC DESIGN VALUES BELOW.

a. Indoor design temperature:
   1) Winter: []
   2) Summer: []
b. Indoor humidity:
   1) Winter: []
   2) Summer: []

6. Thermal Movements: Provide window units that allow thermal movement resulting from the following maximum change (range) in ambient temperature when engineering, fabricating, and installing aluminum windows to prevent buckling, opening of joints, and overstressing of components, connections, and other detrimental effects. Base engineering calculation on actual surface temperatures of materials due to solar heat gain and nighttime sky heat loss.
   a. Temperature Change (Range): 120 deg F, ambient; 180 deg F, material surfaces.

H. Operable window units shall successfully pass operating force and deglazing test requirements of AAMA 101 and life-cycle test requirements specified in AAMA 910.

INCLUDE BELOW IF PROJECT CONTAINS THE FOLLOWING OPERABLE WINDOW TYPES

1. Projected casement window units shall successfully pass the following test requirements as specified in AAMA 101:
   a. Torsion test on an unglazed ventilator.
   b. Horizontal and vertical concentrated load tests on latch rail of each ventilator.
   c. Torsion load test on intermediate frame rails.
   d. Vertical concentrated load test on intermediate frame rails over each ventilator.
   e. Balance arm load test.
2. Projected awning window units shall successfully pass the following test requirements as specified in AAMA 101:
   a. Hold-open arm or stay-bar load test.
   b. Torsion test.
   c. Horizontal concentrated load test.
   d. Vertical concentrated load test.

I. Labeling: Per ANSI/ASHRAE 90.1-2007, provide a permanent nameplate, installed by the manufacturer, listing the U-factor, SHGC, and air leakage rate. The label may be the NFRC energy performance label or the AAMA performance label.

2.3 DESIGN REQUIREMENTS

INCLUDE THE PARAGRAPH BELOW TO CONTROL THE RELATIONSHIP OF VISION AND SPANDREL PANELS WHEN BOTH ARE INCLUDED IN THE PROJECT.

A. Uniform Glass Plane Requirement: Within the same wall opening, fabricate windows to align the exterior surface planes of vision glass with spandrel panels.

1. Maximum out-of-plane dimension for vision and spandrel panels: 1/8-inch.
2. Where applicable, align metal filler panels in the same plane as adjacent spandrel panels.

2.4 MATERIALS

A. Aluminum Extrusions: Provide alloy and temper recommended by the window manufacturer for the strength, corrosion resistance, and application of required finish, but not less than 22,000-psi ultimate tensile strength and of the following thickness and depth at any location for main frame and sash members.

BELOW ARE 2 COMMONLY USED SIZES. 2-1/4-INCH DIMENSION IS NOT RECOMMENDED FOR VENTILATORS OVER 15 SQUARE FEET IN AREA, OR WITH VERTICAL DIMENSION GREATER THAN 78-INCHES.

1. Main Frame Depth: 2-1/4 inches.
2. Main Frame Depth: 3-1/4 inches.

DELETE BELOW FOR SINGLE- AND DOUBLE-HUNG UNITS, OR FOR OTHER TYPES IF NOT REQUIRED.

a. Provide ventilator members of depth matching main frame.

B. Fasteners: Provide aluminum, nonmagnetic stainless steel, epoxy adhesive, or other materials warranted by the manufacturer to be noncorrosive and compatible with aluminum window members, trim, hardware, anchors, and other components of window units.

RETAIN THE PARAGRAPH BELOW.

1. Reinforcement: Where fasteners screw-anchor into aluminum less than 0.125 inch thick, reinforce the interior with aluminum or nonmagnetic stainless steel to receive screw threads or provide standard, noncorrosive pressed-in splined grommet nuts.

GENERALLY RETAIN THE PARAGRAPH BELOW. MODIFY AS APPROPRIATE IF USE OF EXPOSED FASTENERS IS PERMITTED.

2. Exposed Fasteners: Except where unavoidable for application of hardware, do not use exposed fasteners. For application of hardware, use fasteners that match the finish of the member or hardware being fastened, as appropriate.

C. Anchors, Clips, and Window Accessories: Fabricate anchors, clips, and window accessories of aluminum, nonmagnetic stainless steel, or hot-dip zinc-coated steel complying with the requirements of ASTM A 123; provide sufficient strength to withstand design pressure indicated.

CONSIDER INCLUDING BELOW FOR STRUCTURAL STRENGTH, OR TO CLOSE OFF OPENINGS THROUGH CONSTRUCTION

1. Provide continuous structural anchor clips.

D. Sealant: For sealants required within fabricated window units, provide type recommended by the manufacturer for joint size and movement. Sealant shall remain permanently elastic, nonshrinking, and nonmigrating. Comply with Division 07 Section "Joint Sealants" of the Specifications for selection and installation of sealants.

2.5 HARDWARE

A. General: Provide the manufacturer's standard hardware fabricated from aluminum, stainless steel, or other corrosion-resistant material compatible with aluminum and of sufficient strength to perform the function for which it is intended.

DELETE BELOW IF NO PROJECTED WINDOWS.

B. Cam Handles: Provide manufacturer's standard cam-action sweep lock/handle of solid white bronze.

1. Finish: Polished (chrome white).
2. Finish: Oxidized (dark bronze).

DELETE BELOW IF NO DOUBLE HUNG WINDOWS.

C. Handles: Provide manufacturer's standard stainless steel wire pull.

1. Stainless Steel Finish: Satin, natural.
2. Aluminum Finish: Match window frame.

RETAIN THE NEXT PARAGRAPH WITH CASEMENT AND PROJECTED WINDOWS. SPECIAL EGRESS TYPE FOUR-BAR FRICTION HINGES ARE ALSO AVAILABLE FOR CASEMENT WINDOWS WHERE WINDOWS ARE ALSO USED FOR EMERGENCY EGRESS.

D. Four-Bar Friction Hinges: Comply with AAMA 904.

1. Provide concealed four-bar friction hinges with adjustable slide shoes of nylon or other nonabrasive, nonstaining, noncorrosive, durable material.

RETAIN FOR LARGE VENTS IN CASEMENT WINDOWS. VERIFY WITH WINDOW MANUFACTURERS.

E. Butt Hinges: Provide heavy-duty 5-knuckle butt hinges with nylon bushings complying with AAMA 904. Finish and color to match frames.

RETAIN ROTARY OPERATORS BELOW IF DESIRED FOR AWNING, AND CASEMENT TYPE WINDOWS.

F. Gear-Type Rotary Operators: Comply with AAMA 901 for rotary operators. Comply with ASTM E 405, Method A, when subjected to operating moments and closing torques indicated in AAMA 101.

1. Operator shall operate all ventilators simultaneously, securely closing them at both jambs without use of additional manually controlled locking devices.

DELETE TWO PARAGRAPHS BELOW IF NO CASEMENT WINDOWS.

G. Single Point Locks: Provide manufacturer's standard cam-action lift lock of solid white bronze. Color to match ventilator frame.

BELOW FOR LARGE CASEMENTS REQUIRING TWO LATCHING POINTS (NOTE THAT CASEMENT WIDTH MUST BE OVER 2.5 FEET FOR MULTI-POINT LATCH).

H. Two-Point Locks: Provide manufacturer's standard 2-point, cam-action lift lock of solid white bronze. Color of exposed parts to match ventilator frame.

DELETE BELOW IF NO SINGLE- OR DOUBLE-HUNG WINDOWS.

I. Cam Action Lock: Sweep lock and keeper on the meeting rail.

SELECT BELOW FOR HOUSING PROJECTS.

J. Limit Device: Heavy-duty, concealed arm, custodial-key operated limit device designed to restrict occupant operation of ventilator, but permit full operation with custodial key. Provide Truth 99 series or equivalent by window manufacturer. Provide in residential applications, and where indicated.

INCLUDE BELOW WITH EITHER LIMIT DEVICE SPECIFIED ABOVE. MODIFY VALUE BELOW TO SUIT PROJECT.

1. Set devices to limit opening to 6 inches, clear, from window frame member to vent frame.

RETAIN THE NEXT PARAGRAPH WITH DOUBLE-HUNG WINDOWS.

K. Counterbalancing Mechanism: Comply with AAMA 902.

RETAIN ONLY ONE OF THE TYPES OF SASH BALANCES BELOW.

1. Sash Balance Type: Concealed spiral type of size and capacity to hold sash stationary at any open position.
2. Sash Balance Type: Concealed tape spring type of size and capacity to hold sash stationary at any open position.

2.6 ACCESSORIES

A. General: Provide the manufacturer's standard accessories that comply with indicated standards.

DELETE OPTIONAL OR ACCESSORY ITEMS IN THIS ARTICLE THAT ARE NOT REQUIRED. COORDINATE ITEMS RETAINED WITH PROVISIONS CONTAINED IN THE "MATERIALS" ARTICLE.

B. Panning and Trim: Provide panning and trim as shown with anchors as required to securely fasten trim and panning items to window units and adjacent substrates. Provide concealed anchors where possible. Provide units of profile and dimensions indicated, but not less than 0.062-inch-thick extruded aluminum. Miter and cope corners, and dress smooth. Finish to match window units.

ANCHOR CLIPS REFERENCED BELOW ARE FOR 2-PIECE SNAP-ON TRIM. DELETE BELOW IF ONLY ADHESIVELY APPLIED "L"-SHAPED TRIM IS INCLUDED.

1. Interior Trim: Provide 2-piece extruded aluminum box type trim with continuous anchor clips for trim exceeding 36 inches in length.

DELETE BELOW IF NO ADHESIVELY APPLIED "L"-SHAPED TRIM.

2. Interior Trim: Anchor "L"-shaped trim pieces with continuous adhesive tape strip applied to surface in contact with adjacent wall/partition substrate only.

COORDINATE BELOW WITH WINDOW SCHEDULE

C. Insect Screens: Provide insect screens for each operable exterior sash or ventilator. Locate screens on the inside or outside of the window sash or ventilator, depending upon window type. Design windows and hardware to accommodate screens in a tight-fitting removable arrangement, with a minimum of exposed fasteners and latches.

RETAIN ONLY ONE OF THE NEXT TWO PARAGRAPHS IF SCREENS ARE REQUIRED. COMBINE THE PARAGRAPHS IF THE CONTRACTOR IS TO HAVE AN OPTION IN SELECTING SCREEN FRAME MATERIAL.

1. Screen Frames: Fabricate frames of tubular-shaped extruded or formed aluminum members of 0.040-inch minimum wall thickness, with mitered or coped joints and concealed mechanical fasteners. Finish frames to match window units.
   a. Provide removable PVC spline-anchor concealing the edge of the screen frame.
2. Wire Fabric Insect Screen: Provide 18 by 16, mesh of 0.011-inch-diameter black anodized aluminum wire, complying with FS RR-W-365, Type VII.

D. Compression-Type Glazing Strips and Weatherstripping: Unless otherwise indicated, and at manufacturer's option, provide compressible stripping for glazing and weatherstripping such as molded PVC gaskets complying with ASTM D 2287, or molded expanded EPDM gaskets complying with ASTM C 509, Grade 4.

SLIDING-TYPE WEATHERSTRIPPING BELOW IS FOR DOUBLE-HUNG WINDOW UNITS.

E. Sliding-Type Weatherstripping: Provide woven-pile weatherstripping of nylon pile and resin-impregnated backing fabric. Comply with AAMA 701.2.

1. Provide stripping with integral centerline barrier fin of semirigid plastic sheet of polypropylene.
2. Provide weatherstripping locked in to extruded grooves in the sash.
3. Provide sliding-type weatherstripping where sash rails slide vertically along the unit frame. Provide compression-type weatherstripping at the head and sill of each operating sash.

CONSIDER INCLUDING BELOW.

F. Insulation: Blanket or batt type meeting ASTM C 665, Type III, Class A, fiberglass.

2.7 FABRICATION

A. General: Fabricate aluminum window units to comply with indicated standards. Include a complete system for assembly of components and anchorage of window units.

1. Provide units that are reglazable without dismantling sash or ventilator framing.
2. Prepare window sash or ventilators for glazing except where preglazing at the factory is indicated.

REVISE BELOW TO SUIT PROJECT.

3. Provide units that are capable of being reglazed from the building interior, except at spandrels or other inaccessible conditions.

INCLUDE THERMAL BREAK CONSTRUCTION FOR ALL PROJECTS.

B. Thermal-Break Construction, General: Fabricate window units with an integral, concealed low-conductance thermal barrier, located between exterior materials and window members, in a manner that eliminates direct metal-to-metal contact; and that complies with the following:

1. Products comprising the system shall have been in use for not less than 5 years.
2. Systems shall have been tested to demonstrate resistance to thermal conductance and condensation, and to show adequate strength and security of glass retention.
3. Systems shall be capable of transferring shear during bending under design loads by promoting composite action between the exterior and interior extrusions.

C. Weepholes: Provide weepholes and internal passages to conduct infiltrating water to the exterior.

DELETE THE PARAGRAPH BELOW IF THERE ARE NO LINES WHERE VENT FRAMES LAP THE WRONG WAY TO SHED WATER.

D. Provide water-shed members above side-hinged ventilators and similar lines of natural water penetration.

DELETE THE NEXT PARAGRAPH IF SUBFRAMES ARE NOT REQUIRED. SUBFRAMES PROVIDE A NEAT, SEALABLE PERIMETER FOR RENOVATION WORK. THEY ARE USUALLY NOT REQUIRED FOR WINDOWS IN NEW SURROUNDING CONSTRUCTION.

E. Subframes: Provide subframes with anchors for window units, where shown, of profile and dimensions indicated but not less than 0.062-inch-thick extruded aluminum. Miter or cope corners, and weld and dress smooth with concealed mechanical joint fasteners. Finish to match window units.

MODIFY PARAGRAPHS BELOW TO SUIT PROJECT REQUIREMENTS.

1. Provide subframes at all wall openings to receive window units.
2. Locate subframes at sill, head and jambs of openings.

DELETE THE PARAGRAPH BELOW IF MULLIONS ARE NOT REQUIRED.

F. Mullions: Provide mullions and cover plates as shown, matching window units, complete with anchors for support to structure and installation of window units. Allow for erection tolerances and provide for movement of window units due to thermal expansion and building deflections, in the manner indicated.

DELETE THE NEXT PARAGRAPH IF GLAZING STOPS ARE NOT REQUIRED (AT STRUCTURAL-GLAZED TYPE WINDOW SYSTEMS FOR EXAMPLE).

G. Glazing Stops: Provide screw-applied or snap-on glazing stops, coordinated with glass selection and glazing system indicated. Finish glazing stops to match window units.

DELETE THE PARAGRAPH BELOW IF PREGLAZING IS IMPRACTICAL. GLASS SIZES LARGER THAN 60 TO 100 UNITED INCHES MAY BE DIFFICULT TO HANDLE WITHOUT DAMAGE. IT IS ALSO POSSIBLE THAT THE INSTALLATION OR ANCHORAGE SYSTEM WILL NOT PERMIT PREGLAZING. **VERIFY WITH WINDOW MANUFACTURER.**

H. Preglazed Fabrication: Preglaze window units at the factory. Comply with glass and glazing requirements of the Division 08 Section "Glazing" of these specifications and AAMA 101.

2.8 FINISHES, GENERAL

A. Comply with referenced AAMA Voluntary Specifications for detailed finish requirements.

DELETE BELOW IF NO CURTAIN WALL

TYPICALLY SPECIFY FINISHES IN CURTAIN WALL SECTION.

B. Finish aluminum windows to match other adjacent glazed aluminum curtain wall components, when applicable. Refer to Division 08 Section “Glazed Aluminum Curtain Walls” for finish requirements.

DELETE 2 ARTICLES BELOW IF SPECIFIED IN CURTAIN WALL SECTION.

2.9 FLUOROPOLYMER ALUMINUM FINISHES

RETAIN FINISHES IN PARAGRAPHS BELOW TO SUIT PROJECT. FLUOROPOLYMER FINISH IS PREFERRED BY THE U OF M.

IF RETAINING MORE THAN ONE, INDICATE LOCATION OF EACH ON DRAWINGS BY TYPE. COORDINATE WITH DESIGNATIONS IN THIS SECTION. ALUMINUM-FRAMING SYSTEMS ARE AVAILABLE WITH DUAL FINISHES, ALLOWING DIFFERENT INTERIOR AND EXTERIOR COLOR FINISHES.

IF SPECIFIC PRODUCTS ARE REQUIRED, NAME COATING MANUFACTURERS AND PRODUCTS.

A. High-Performance Organic Finish: Two-coat fluoropolymer finish complying with AAMA 2605 and containing not less than 70 percent PVDF resin by weight in color coat. Prepare, pretreat, and apply coating to metal surfaces to comply with coating and resin manufacturers' written instructions.

TYPICALLY, ONLY USE THREE-COAT FLUOROPOLYMER FINISH WITH METALLIC FINISHES.

B. High-Performance Organic Finish: Three coat fluoropolymer finish complying with AAMA 2605 and containing not less than 70 percent PVDF resin by weight in both color coat and clear topcoat. Prepare, pretreat, and apply coating to exposed metal surfaces to comply with coating and resin manufacturers' written instructions.

BELOW IS TYPICAL COLOR CHOICE.

C. Color and Gloss: Non-metallic solid color, dark bronze; low gloss, as selected by the Owner.

D. Field Touch-Up Materials: Fluoropolymer coating produced specifically for field touch-up work by same manufacturer as shop applied coating.

2.10 ANODIC ALUMINUM FINISHES

USUALLY RETAIN ONLY ONE OF THE FINISH SYSTEMS SPECIFIED BELOW. IF MORE THAN ONE IS REQUIRED, INDICATE THE LOCATION OF EACH ON DRAWINGS OR INSERT A DESCRIPTION OF THE LOCATION OF EACH SEPARATE FINISH.

A. Class I Clear Anodized Finish: Anodic Coating: Class I Architectural, clear film thicker than 0.7 mil, complying with AAMA 611.

RETAIN THE PARAGRAPH ABOVE IF CLEAR FINISH IS REQUIRED, OR THE PARAGRAPH BELOW IF A COLOR ANODIZED FINISH IS DESIRED.

B. Class I Color Anodized Finish: Class I Architectural, film thicker than 0.7 mil with integral color or electrolytically deposited color, complying with AAMA 611.

SELECT COLOR BELOW OR MODIFY WHEN APPROVED BY THE OWNER.

1. Color: Dark bronze.

C. Finish Appearance: Variations in appearance of butting or adjacent anodized aluminum elements are acceptable if within 1/2 the range indicated in approved samples. Noticeable variation in the same element is not acceptable.

PART 3 - EXECUTION

3.1 EXAMINATION AND PREPARATION

A. Inspect openings before beginning installation. Verify that rough or masonry opening is correct and the sill plate is level.

EDIT PARAGRAPHS TO SUIT PROJECT FROM THE OPTIONS BELOW.

1. Masonry surfaces shall be visibly dry and free of excess mortar, sand, and other construction debris.
2. Metal surfaces shall be dry; clean; free of grease, oil, dirt, rust and corrosion, and welding slag; without sharp edges or offsets at joints.

3.2 INSTALLATION

DELETE THE NEXT PARAGRAPH IF THERE IS NO CURTAIN WALL OR ALUMINUM STOREFRONT WORK CONTAINING ALUMINUM WINDOW UNITS.

A. Refer to the Division 08 Sections "Glazed Aluminum Curtain Walls" or "Aluminum-Framed Entrances and Storefronts" for installation requirements of aluminum window units in [glazed curtain walls] [aluminum entrances and storefronts.

COORDINATE THE NEXT THREE PARAGRAPHS AND DRAWINGS IF ALL WINDOW UNITS ARE INCLUDED IN GLAZED CURTAIN WALL WORK.

B. Comply with manufacturer's specifications and recommendations for installation of window units, hardware, operators, and other components of the work.

C. Set window units plumb, level, and true to line, without warp or rack of frames or sash. Provide proper support and anchor securely in place.

1. Separate aluminum and other corrodible surfaces from sources of corrosion or electrolytic action at points of contact with other materials by complying with the requirements specified under paragraph "Dissimilar Materials" in the Appendix to AAMA 101.

D. Set sill members and other members in a bed of joint sealant or gaskets, as shown, to provide weathertight construction. Refer to the Division 07 Section "Joint Sealants" for compounds, fillers, and gaskets to be installed concurrently with window units. Coordinate installation with wall flashings and other components of the work.

1. Compounds, joint fillers, and gaskets to be installed after installation of window units are specified as work in the "Joint Sealants" section.

ALWAYS RETAIN BELOW FOR NEW CONSTRUCTION. FOR WINDOW REPLACEMENT PROJECTS MODIFY OR DELETE BELOW DEPENDING UPON EXISTING CONDITIONS.

E. Refer to the Division 07 Section "Air Barrier" for coordination with air barrier terminations around windows.

F. Loosely pack cavities around window perimeter between existing construction and window frame or subframe members with fiberglass insulation; pack accessible cavities of window frame with fiberglass, according to window manufacturer's instructions.

3.3 FIELD QUALITY CONTROL

RETAIN PARAGRAPHS BELOW TO DESCRIBE TESTS AND INSPECTIONS PERFORMED BY THE INDEPENDENT TESTING AGENCY EMPLOYED BY THE OWNER. RETAIN "FIELD QUALITY-CONTROL REPORTS" PARAGRAPH IN "SUBMITTALS" ARTICLE. EDIT TO SPECIFY PROJECT SPECIFIC TESTING REQUIREMENTS.

A. Testing Agency: Owner will engage a qualified testing agency for witnessing field testing, determining that the tests are performed correctly and making the final determination whether the aluminum windows have successfully passed the tests.

B. Testing Activities: Testing and inspecting of representative areas of window shall take place as installation proceeds to determine compliance of installed assemblies with specified requirements. Owner will determine locations and timing of testing.

C. Test Area: One window at corner and center of wall, per each wall elevation, including surrounding wall construction, at heads, jambs and sills.

1. Perform at least three tests, prior to 35, and 70 percent completion, and before installation of interior walls and finishes.

D. Windows will be considered defective if they do not pass tests and inspections.

E. If test area fails to meet the specified air infiltration or water penetration requirements, Contractor shall submit description of proposed remedial work for Owner and Architect's information.

1. Remedial work shall be incorporated into the test specimen for retesting.
2. Cost of retesting shall be responsibility of Contractor.

F. Remedial work which results in successful retesting of test specimen shall be incorporated in installed system for entire Project.

G. For each area which fails field testing, 1 additional area of equal size shall be tested for both air infiltration and water penetration.

1. Cost of testing of additional areas shall be responsibility of Contractor.

H. When installation is 50 percent complete, Owner and Architect will select 1 additional location for testing in accordance with AAMA 501, as specified above.

1. For each area which fails field testing, 1 additional area of equal size shall be tested for both air infiltration and water penetration.
2. Cost of testing of additional areas shall be responsibility of Contractor.

I. Testing agency shall submit copies of inspection and test reports to Owner, Architect and Contractor within 48 hours after date of test.

J. The Owner reserves the right to select additional test areas as required, without limitation, subject to correction and remediation as specified herein.

3.4 COMMISSIONING

A. Perform the commissioning activities as outlined in the Division 01 Section “Full Project Commissioning” or “Project Commissioning for Small Projects” and other requirements of the Contract Documents.

3.5 ADJUSTING, CLEANING, PROTECTION

A. Adjust operating sash and hardware to provide a tight fit at contact points and at weatherstripping for smooth operation and a weathertight closure.

B. Clean aluminum surfaces promptly after installation of windows. Exercise care to avoid damage to protective coatings and finishes. Remove excess glazing and sealant compounds, dirt, and other substances. Lubricate hardware and other moving parts.

C. Clean glass of preglazed units promptly after installation of windows. Comply with requirements of the Division 08 Section "Glazing" for cleaning and maintenance.

D. Provide final protection and maintain conditions, in a manner acceptable to aluminum window manufacturer, that ensure window units are without damage or deterioration at the time of Substantial Completion.

REVISE BELOW TO SUIT PROJECT AND COORDINATE WITH DRAWINGS.

3.6 WINDOW SCHEDULE

A. Double-hung windows

a. Counterbalancing mechanism.
b. Cam Action Lock.
c. Lift Handle: Applied sash lifts on bottom rail of lower sash (2 per sash).

B. Projected casement windows

1. Hardware: Provide the following operating equipment and hardware:

DELETE THE NEXT PARAGRAPH IF IT IS NOT REQUIRED.

a. Rotary Operator.
b. Friction Hinges: 2 per ventilator.

SELECT HINGE TYPE ABOVE OR BELOW. CONSIDER ADDING A REQUIREMENT FOR LIMIT STOPS TO PREVENT PROJECTION BEYOND WALL SURFACES WHERE THIS IS DESIRABLE.

c. Butt Hinges: 2 per ventilator.

RETAIN BELOW FOR EITHER HINGE TYPE

1) Provide ventilator operation that permits inside cleaning of the outside glass face from the interior.
2) Provide 3 hinges on units over 4 feet high or 4 feet wide.

SELECT ONE OF THE SASH LOCKS BELOW BASED ON WINDOW SIZE / LOCATION. NOTE: MODIFY TEXT IF NECESSARY TO PROVIDE FOR 2 LOCKS ON UNITS OVER 3 FEET, 6 INCHES WIDE.

d. Sash Lock: Cam action lock.

RETAIN BELOW FOR WINDOW UNITS WITH VENTILATORS OVER 6 FEET ABOVE THE FLOOR.

e. Sash Lock: Pole-operated cam action lock.

SPECIFY BELOW FOR SLEEPING ROOMS.

f. Limit Device.

PROVIDE INSECT SCREENS IN HOUSING PROJECTS AND FOOD PREPARATION AREAS ONLY. SCREENS ARE GENERALLY NOT REQUIRED FOR UNIVERSITY PROJECTS

2. Insect screens

C. Projected awning windows

1. Hardware: Provide the following operating hardware and equipment:
   a. Rotary operator
   b. Friction Hinges: 2 per ventilator.

SELECT HINGE TYPE ABOVE OR BELOW. CONSIDER ADDING A REQUIREMENT FOR LIMIT STOPS TO PREVENT PROJECTION BEYOND WALL SURFACES WHERE THIS IS DESIRABLE.

   c. Butt Hinges: 2 per ventilator.

RETAIN BELOW FOR EITHER HINGE TYPE

      1) Provide ventilator operation that permits inside cleaning of the outside glass face from the interior.
      2) Provide 3 hinges on units over 4 feet high or 4 feet wide.

   d. Hold-Open Device: Automatic locking hold-open arms (2 per ventilator.

SPECIFY BELOW FOR SLEEPING ROOMS.

   e. Limit Device.

PROVIDE INSECT SCREENS IN HOUSING PROJECTS AND FOOD PREPARATION AREAS ONLY. SCREENS ARE GENERALLY NOT REQUIRED FOR UNIVERSITY PROJECTS

2. Insect screens

D. Fixed windows

END OF SECTION 085113

UNIVERSITY OF MICHIGAN
ARCHITECTURE, ENGINEERING AND CONSTRUCTION

ARCHITECTURE & ENGINEERING
326 East Hoover, Mail Stop B
Ann Arbor, MI 48109-1002
Phone: 734-764-3414
Fax: 734-936-3334

BuildingName
The Description of the Project
P00000000 0000

SPECIFICATION DIVISION 8

NUMBER SECTION DESCRIPTION

DIVISION 08 OPENINGS
SECTION 087100 - DOOR HARDWARE

END OF CONTENTS TABLE

DIVISION 08 OPENINGS
SECTION 087100 - DOOR HARDWARE

REVISION HISTORY

APRIL 2005 - UPDATED SWEEP SEALS, JAMB SEALS AND THRESHOLDS.

FEBRUARY 2007 - UPDATED TO REMOVE SPECIFIC REFERENCES TO RICK HADDEN. QUESTIONS REGARDING CORE TYPE, KEYING, AND BUILDING STANDARDS SHOULD BE DIRECTED TO A LOCKSMITH AT THE KEY OFFICE. IN GENERAL, AVOID USE OF SPECIFIC CONTACT NAMES IN SPECIFICATION.

DECEMBER 2008 - ADDED SUBMITTAL REQUIREMENTS, ADDED ACCESS CONTROL PRODUCTS AND UPDATED PRODUCT NUMBERS.

JANUARY 2013 REVISED FORMATTING AND CONTENT

PART 1 - GENERAL

1.1 RELATED DOCUMENTS

A. Drawings and general provisions of the Contract, including Standard General Conditions, Supplemental General Conditions, Division 01 Specification Sections, and other applicable Specification Sections, apply to this Section.

EDIT BELOW TO SUIT PROJECT.

B. Related Sections:

1. Division 6 Section: Architectural Woodwork.
2. Division 8 Section: Aluminum Entrances and Storefront.
3. Division 12 Section: Laboratory Casework and Fixtures.
4. Division 28 Section: Access Control and Monitoring System.

1.2 SUMMARY

A. Section Includes: Door hardware as indicated on drawings and in schedules

EDIT BELOW TO SUIT PROJECT.

Hinges.
Closers.
Double-acting closer/pivot sets.
Door Operators.
Small Format Interchangeable Cores (SFIC).
Locks and latches.
Strikes.
Latches.
Stops.
Silencers.
Push/pull sets.
Exit device (panic set).
Astragals.
Flush bolts.

Coordinators.
Trim protector bars.
Kickplates.
Sweep seals.
Jamb seals.
Automatic door bottoms.
Electrically activated hold-open devices.
Thresholds.
Removable Mullion.
Concealed power transfer.
Door position switch.
Request to exit sensor.

TYPICALLY DELETE BELOW. INCLUDE FOR PROJECTS WITH ALUMINUM ENTRANCES AND STOREFRONT.

B. Products specified under this section but provided under sections:

1. 08410: Aluminum Entrances and Storefront.

1.3 SUBMITTALS

A. Submittals: Submit the following:

1. Manufacturer's product literature.
2. Schedule of hardware showing application to project.
3. Furnish templates to each fabricator of doors and frames, as required for preparation to receive hardware.

INCLUDE PARAGRAPHS 4 & 5 BELOW FOR PROJECTS WITH ELECTRIFIED HARDWARE.

4. Wiring Diagrams: For power, signal, and control wiring and including the following:
   a. Details of interface of electrified door hardware and building safety and security systems.

RETAIN FOUR SUBPARAGRAPHS BELOW IF ELECTRIFIED DOOR HARDWARE IS COMPLEX. IF ONLY ELECTRIC STRIKES ARE REQUIRED, THIS LEVEL OF DETAIL MIGHT NOT BE NECESSARY.

   b. Schematic diagram of systems that interface with electrified door hardware.
   c. Point-to-point wiring.
   d. Risers.
   e. Elevations doors controlled by electrified door hardware.
5. Operation Narrative: Describe the operation of doors controlled by electrified door hardware. Include description of how the opening is to function at all times, including normal operation, upon activation of the building fire alarm system, and upon loss of power.

TYPICALLY DELETE BELOW -- INCLUDE FOR PROJECTS IN BFS BUILDINGS WITH SPECIAL LOCKING ARRANGEMENTS THAT IMPEDE EGRESS (I.E. DELAYED EGRESS, DOOR INTERLOCKS)

6. Special locking arrangements in buildings under the jurisdiction of the State of Michigan Bureau of Fire Services (BFS) require submission of the following documents to BFS for door locking review:
   a. Floor plan showing door locations to be locked and type of hardware and equipment scheduled for installation.
   b. A description of the "sequence of operations" of the door locking system outlining operation during normal operation, upon activation of the building fire alarm system, and upon loss of primary power the fire alarm system.
   c. Product literature for the door hardware and related equipment, including locks, control equipment, accessory equipment, power supplies, and any other hardware used.

1.4 QUALITY ASSURANCE

INCLUDE PARAGRAPHS A AND B IN EVERY SPECIFICATION SECTION. EDIT THE REFERENCE STANDARDS FOR PROJECT REQUIREMENTS.

A. Manufacturers and Products: The products and manufacturers specified in this Section establish the standard of quality for the Work. Subject to compliance with all requirements, provide specified products from the manufacturers named in Part 2.

B. Reference Standards: Products in this section shall be built, tested, and installed in compliance with the specified quality assurance standards; latest editions, unless noted otherwise.

1. NFPA 70: National Electrical Code.
2. NFPA 80: Standard for Fire Doors and Other Opening Protectives
3. NFPA 252: Standard Methods of Fire Tests of Door Assemblies.
4. ANSI A 156 series standards applicable to each particular type of hardware.

PART 2 - PRODUCTS

THE HARDWARE INCLUDED IN THIS SECTION MAY NOT BE SUITABLE FOR SPECIALIZED FIRE-RATED DOORS - I.E. FRP DOORS, LARGE WOOD DOORS, EXTENSIVE GLASS, ETC. CONSULT WITH DOOR AND HARDWARE MFRS TO DETERMINE UL LISTED HARDWARE. COORDINATE SPECIALIZED HARDWARE WITH KEY OFFICE TO ENSURE MAINTAINABILITY.

2.1 HARDWARE, GENERAL

A. Standards: Where base material and quality of finish are not otherwise specified, comply with ANSI A 156 series standards applicable to each particular type of hardware.

B. Fire-Rated Door Assemblies: Where fire-rated door assemblies are indicated, provide door hardware rated for use in assemblies complying with NFPA 80 that are listed and labeled by a qualified testing agency, for fire-protection ratings indicated, based on testing at positive pressure according to NFPA 252 or UL 10C, unless otherwise indicated.

C. Electrified Door Hardware: Listed and labeled as defined in NFPA 70, Article 100, by a testing agency acceptable to authorities having jurisdiction.

2.2 HINGES

A. Provide 5-knuckle, 2 ball-bearing hinges; swaged; inner leaf beveled; with square corners; nonremovable pin, complete with set screw (knurled pin not acceptable); and as follows:

SELECT FULL MORTISE UNLESS OTHERWISE REQUIRED.

1. Type: Full-mortise.
2. Type: Half-surface.
3. Type: Half-mortise.
4. Type: Full surface.

TYPICALLY SELECT STEEL FOR INTERIOR DOORS AND FOR ALL FIRE RATED OPENINGS. STEELS IS APX HALF THE COST OF BRASS

SELECT BRASS FOR EXTERIOR DOORS, OR WHERE CORROSION IS EXPECTED (HIGH HUMIDITY, POOL AREAS, ETC.) BRASS IS MORE DURABLE THAN STAINLESS FOR THESE EXPOSURES.

5. Base Metal: Steel.
6. Base Metal: Stainless Steel.
7. Base Metal: Brass.

SELECT FROM VARIOUS FINISHES, OR RETAIN THE FOLLOWING. FINISH METALS ARE PLATED OVER STEEL OR BRASS, OR IN THE CASE OF STAINLESS STEEL AND BRASS, THE BASE METAL MAY BE FINISHED.

8. Finish: To match "Finishes" requirements of this Section.
9. Size and Weight: Provide hinges sized as follows:

BELOW FOR MOST STANDARD DOORS.

a. Doors not wider than 3 feet 6 inches nor taller than 7 feet 6 inches:
   1) Size: 4-1/2 inches by 4-1/2 inches; 0.180-inch thick.

ABOVE FOR HEAVY, HIGH-FREQUENCY DOORS. BELOW IS ECONOMICAL HINGE FOR MEDIUM WEIGHT, AVERAGE FREQUENCY DOORS.

   2) Size: 4-1/2 inches by 4-1/2 inches; 0.134-inch thick.

BELOW FOR EXTRA LARGE DOORS.

b. Doors wider than 3 feet 6 inches or taller than 7 feet 6 inches:
   1) Size: 5 inches by 4-1/2 inches; 0.190-inch thick.

ABOVE FOR HEAVY, HIGH-FREQUENCY DOORS. BELOW IS ECONOMICAL HINGE FOR MEDIUM WEIGHT, AVERAGE FREQUENCY DOORS.

   2) Size: 5 inches by 4-1/2 inches; 0.145-inch thick.

DELETE BELOW UNLESS 1-3/8 INCH THICK INCLUDED. NOTE THAT BELOW SELECTION IN FOR AVERAGE FREQUENCY SERVICE DOORS - MODIFY VALUE TO .180 FOR HIGH FREQUENCY DOORS

c. Doors 1-3/8 inches thick and not wider than 3 feet nor taller than 7 feet: 4-1/2 inches by 4 inches; 0.134-inch thick.

10. Manufacturer: Hager, Ives, McKinney, or Stanley.

USE BELOW FOR ALL ALUMINUM STOREFRONT DOORS, EXTERIOR HOLLOW METAL DOORS AND VERY HIGH FREQUENCY AND/OR HEAVY INTERIOR DOORS. ALSO USE AS STANDARD FOR HOUSING WORK.

B. Continuous Gear Hinges: Provide units designed for heavy-duty, high-traffic use in new applications. Fabricate units of Class I anodized, 6063 T6 aluminum alloy with polyacetal thrust bearings.

1. Color: Clear anodized
2. Color: Dark bronze anodized.

BELOW IS STANDARD. ALSO AVAILABLE ARE RETROFIT UNITS THAT COVER BUTT CUT OUTS ON EXISTING FRAMES, AND A VARIETY OF FULL- AND HALF-SURFACE UNITS - SEE PRODUCT CATALOGS

3. Manufacturer/Model: Select Products Limited, SL-11HD, or equivalent products of Hager-Roton or Pemko.

2.3 CLOSERS

A. Provide closers with field-adjustable, full-range sizing feature capable of complying with manufacturer's size recommendations for application indicated; and complying with applicable portions of the Americans with Disabilities Act (ADA).

1. Manufacturer/Model: LCN, 4000 Series "Smoothee" or Sargent no substitutions.
   a. Interior doors:
      1) Closer mounted on pull side of door:
         a) Regular: LCN 4011 REG or Sargent 281 O
         b) Hold open: LCN 4011 H or Sargent 281 H
      2) Closer mounted on the push side of door
         a) Regular: LCN 4110 EDA or Sargent 281 P10
         b) Hold open: LCN 4110 H-EDA or Sargent 281 PH10
         c) Stop arm: LCN 4110 CUSH or Sargent 281 PS
      3) Closer mounted on the non-door side of the frame:
         a) Regular: LCN 4021 REG or Sargent 281 OZ
   b. Exterior doors
      1) Closer mounted on push side of door
         a) Regular: LCN 4021 REG or Sargent 281 OZ

B. Unless otherwise indicated, mount closer bodies on room side (not corridor side) of doors. Refer doubtful conditions to Architect for decision.

THE FOLLOWING CLOSER/PIVOT SET CAN BE USED TO HANG AND CONTROL DOUBLE-ACTING DOORS OF WOOD, ALUMINUM OR HOLLOW METAL CONSTRUCTION. SIMPLE DOUBLE-ACTING HINGES CAN ALSO BE USED, BUT REQUIRE LARGE CLEARANCES TO WORK PROPERLY.

2.4 DOUBLE-ACTING CLOSER/PIVOT SETS

A. Provide concealed, double-acting closer for installation in hollow metal frame, and adequately sized in accordance with manufacturer's recommendations to suit door type, size and application.

1. Provide units with manufacturer's standard adjustable auxiliary stops.
2. Manufacturer/Model:
   a. LCN No. 6030. No substitutions.

B. Accessory Hinges: Provide manufacturer's standard center pivot sets designed specifically for use with indicated closer.

1. Manufacturer/Model: Ives No. 7255. No substitutions.

THE FOLLOWING IS THE UNIVERSITY STANDARD ADA DOOR OPERATOR. NOTE THE FOLLOWING:

IF A DOOR OPERATOR IS USED IN LIEU OF PHYSICAL OPERATING CLEARANCES ON THE EGRESS SIDE, IT MUST BE CONNECTED TO EMERGENCY POWER (I.E. BUILDING GENERATOR). BATTERY BACKED OPTIONS ARE NOT AVAILABLE. (NFPA 80)

ON ALL FIRE RATED DOORS, DOOR OPERATORS ARE REQUIRED TO BE CONNECTED TO THE BUILDING FIRE ALARM SYSTEM (NFPA 80). IF DOOR IS TIED TO BUILDING FIRE ALARM SYSTEM, COMMUNICATE RELATED OPERATIONAL ISSUES TO BUILDING MANAGER. COORDINATE WITH DESIGN MANAGER.

2.5 DOOR OPERATORS

A. General: Of size recommended by manufacturer for door size, weight, and movement; for condition of exposure; and for long-term, maintenance-free operation under normal traffic load for type of occupancy indicated.

1. Type: Low-energy power operated, complying with ANSI/BHMA A156.19.
2. Connections: For power and control wiring.
3. Adjustment Features: Fully adjustable without removing entrance doors, including
4. On/Off Feature: On/off/hold-open switch controls electric power to operator.

B. Electromechanical Operators: Self-contained overhead units, with closing speed controlled by gear train and dynamic braking action of electric motor and with manual operation and spring closing when power is off.

1. Closing Mechanism: Power-assisted spring operated.
2. Mounting: Surface mounted
3. Manual Operation: Requires less than 15 lbf to set door in motion when power is off, according to ANSI/BHMA A156.19.
4. Activation Device: Manufacturer's standard 4-inch diameter round stainless steel push-plate switch with contrasting-colored, engraved message. International symbol of accessibility and "Push to Open."

EDIT BELOW TO BE PROJECT SPECIFIC.

C. Manufacturer/Model: LCN, Model 4642 (for push side mount) or 4631 (for pull side mount). No substitutions.

INCLUDE THE FOLLOWING FOR DOORS CONNECTED TO BUILDING FIRE ALARM SYSTEM.

D. Provide acrylic sign adjacent to door actuator:

1. Copy: "Push button disabled during fire alarm"
2. Color, font, and details to match building standard room signs.

2.6 SMALL FORMAT INTERCHANGABLE CORES (SFIC)

RETAIN BELOW IF DEMOLISHING EXISTING DOORS

A. Salvage existing cores and reinstall in new devices.

FOR CONSISTENCY AND EASE IN KEYING IN EXISTING BUILDINGS, VERIFY WHICH MANUFACTURER'S CORES ARE USED IN THAT BUILDING. SPECIFY CORES FROM SAME MANUFACTURER AND KEYWAY FOR NEW DOORS. CALL KEY OFFICE TO OBTAIN CORE TYPE AND KEYWAY INFORMATION.

B. Provide small format 7-pin removable cores to match building standard.

1. Manufacturers:
   a. Best.
   b. Medeco Keymark.
   c. Schlage Everest.

C. Provide keying in a masterkey system to be designed by Owner. Keying is the responsibility of the Contractor; and shall be performed by the cylinder supplier. Deliver keyed cores to the University of Michigan Key Office for installation by Owner. Contact the Owner's Key Office (764-3481) for questions concerning keying.

RETAIN BELOW FOR PROJECTS WITH EXTERIOR DOORS OR LARGE INTERIOR AREAS. COORDINATE WITH CM.

D. Construction Locks: In each exterior door, provide temporary cylinders, installed simultaneously with the lock. Temporary cylinders shall remain for the duration of construction.

2.7 LOCKS AND LATCHES

A. General:

1. BHMA A156.13 (mechanical); A156.25 (electromechanical), grade 1.
2. Provide mortise type, lever handle locksets equipped to receive SFIC.
3. Manufacturer/Model of Locksets: Unless noted otherwise for specific function noted, provide one of the following:
   a. Sargent 8200 Series.
   b. Corbin Russwin ML2200 series.
   c. Schlage L Series.

BELOW IS TYPICAL OF MANY BUILDINGS BUT NOT ALL, CONFIRM BUILDING STANDARD WITH KEY OFFICE

4. Lever style: Sargent J-style tubular lever or equivalent by or equivalent model by Schlage or Corbin Russwin
5. Rose style: 2" diameter
6. Thumbturn: For all locksets with thumb turn functionality, provide oversized ADA style thumb turns.
   a. Sargent LB thumbturn
   b. Schlage EZ turn: L583-363
   c. Corbin Russwin Ergonomic Thumbturn: 707F58
7. Knurled handle: Provide on locksets to hazardous areas, including mechanical rooms, elevator machine rooms, electrical closets and substation rooms, and stairways.

B. Mechanical Locksets:

BELOW ARE EXAMPLES OF TYPICAL UNITS. VERIFY TRIM STYLE DESIRED. LNJ NOTED BELOW IS TUBULAR LEVER ARM WITH SMALL ROUND ETCHUTSION. GENRALLY, MATCH STYLES IN ADJACENT PORTIONS OF BUILDING. CONTACT A LOCKSMITH AT THE KEY OFFICE FOR INFORMATION ON EXISTING LOCK STYLES.

ANSI FUNCTION CODES LISTED BELOW IF AVAILABLE. USE CODE TO DETERMINE EQUIVALENCE BETWEEN MANUFACTURERS DURING SUBMITTAL PHASE.

a. Office Lockset with thumb turn: ANSI function F04
   1) Sargent 8205.
   2) Schlage L9050
   3) Corbin Russwin ML2054

ALL CLASSROOMS SHOULD BE LOCKABLE FROM INSIDE THE ROOM AND PROVIDE VISUAL INDICATION OF DOOR STATUS ON CLASSROOM SIDE. REVIEW DESIRED FUNCTION WITH USER - SHOULD THE DOOR REVERT TO LOCKED OR REVERT TO UNLOCKED STATE AFTER IT IS OPENED?

b. Office Locksets for Classroom use:
   1) Office Lockset: ANSI function F04; Schlage L9050 with locked/unlocked indicator on room side L283-711 or equivalent model by Sargent or Corbin Russwin.
   2) Office Lockset with Automatic unlocking: Schlage L9056 with locked/unlocked indicator on room side L283-711 or equivalent model by Sargent or Corbin Russwin.

c. Passage Lockset: ANSI function F01
   1) Sargent 8215.
   2) Schlage L9010.
   3) Corbin Russwin ML2010.

THE FOLLOWING SPACES SHOULD HAVE STORE ROOM FUNCTION SETS: PHONE CLOSETS AND TELECOMMUNICATION ROOMS, MECHANICAL ROOMS, ELEVATOR MACHINE ROOMS, SUBSTATIONS AND TUNNEL DOORS.

d. Service/Store Room Lockset: ANSI function F07
   1) Sargent 8204.
   2) Schlage L9080
   3) Corbin Russwin ML2057.

e. Privacy Lockset with "Occupied" Indicator and coin turn override: Schlage L9044 with L283-722 indicator or equivalent model by Sargent or Corbin Russwin.

C. Electromechanical Locks: Solenoid driven; mortise latchbolt; with strike that suits frame; keyed override, with request to exit and door position switches.

BELOW IS ELECTRICALLY UNLOCKED DEVICE FOR ACCESS CONTROL INSTALLATIONS - FAIL SECURE (LOCKED). MECHANICAL EGRESS ALWAYS AVAILABLE. INCLUDES REQUEST TO EXIT SWITCH (RX) AND DOOR POSITION SENSOR (DPS). COORDINATE WITH ELECTRICAL FOR RELATED WORK.

1. Electromechanical (Fail Secure): Schlage L9092 RX DPS or equivalent model by Sargent or Corbin Russwin.

D. Digital Locksets

USE BELOW FOR ALL ANIMAL HOLDING ROOM APPLICATIONS. FOR OTHER USES, ANOTHER LOCK FUNCTION MAY BE NEEDED. PROGRAMMING IS DONE AT THE LOCKSET; SPECIAL HANDHELD PROGRAMMER/SOFTWARE IS NOT NEEDED.

1. Battery-powered, self-contained electronic locks; consisting of complete lockset, mounting hardware, SFIC, strike, and with features and accessories indicated. Provide key override, low-battery detection and warning, LED status indicators, and ability to program at the lock.

PART NUMBER BELOW IS KEYPAD ONLY WITH LEVER STYLE TO MATCH SARGENT J-STYLE LEVER.

a. Manufacturer/Model: Schlage only; Model CO-100-MS-70-KP with TLR Tubular lever style. No substitutions.

USE BELOW FOR LSA CLASSROOM AND SOME LAB APPLICATIONS. COORDINATE FUNCTION WITH LSA REP AND CLASSROOM OPERATIONS. PROGAMMING IS DONE AT THE DOOR VIA SOFTWARE AND HANDHELD PROGRAMMER. HAS INCREASED FUNCTIONALITY OVER CO-100 DEVICE ABOVE. VERIFY WITH USER THAT THEY HAVE THE PROGRAMMING DEVICE

2. Battery-powered, self-contained electronic locks; consisting of complete lockset, mounting hardware, SFIC, strike, and with features and accessories indicated. Provide key override, low-battery detection and warning, LED status indicators, and ability to program at the lock.

NOTE THAT SCHLAGE OFFERS BOTH CO-200 AND AD-200 LOCKSETS. THE AD LOCKSET PROVIDES FUTURE NETWORKING CAPABILITY AND IS THE CURRENT STANDARD.

PART NUMBERS BELOW INCLUDES LEVER STYLE TO MATCH SARGENT J-STYLE LEVER.

PART NUMBER BELOW IS KEYPAD ONLY

a. Manufacturer/Model: Schlage only; Model AD-200-MS-70-KP with TLR Tubular lever style. No substitutions.

PART NUMBER BELOW IS MAG STRIPE AND KEYPAD. NOTE THAT THIS DOES NOT AUTOMATICALLY REQUIRE USERS TO USE BOTH KEYPAD AND CARD.

b. Manufacturer/Model: Schlage only; Model AD-200-MS-70-MGK with TLR Tubular lever style. No substitutions.

2.8 STRIKES

A. General: With each lockset, furnish companion strike as indicated, for installation on door jamb.

B. Mechanical Strikes: Provide handed-type strike plates with curved lip; flat (non-handed) strikes are not permitted.

USUALLY RETAIN THE FOLLOWING UNLESS CERTAIN THAT EXTENDED LIPS ARE NOT REQUIRED.

1. Provide strike plates with extended lips where required to protect door frame and trim from being marred by latchbolt. Provide strike plates that project not more than 1/8 inch beyond door frame trim at single doors; and flush with face of doors at double (pair) door applications.
2. Provide custom-fabricated strike plates at existing door frames if required for compatibility with new lockset or latchset units. Fabricate units of base metal and finish specified. Provide units manufactured by Accurate Hardware Inc., or equivalent.

USE THE FOLLOWING ELECTRIC STRIKE FOR SINGLE ACCESS CONTROL DOORS THAT ARE NOT RATED. TYPICALLY KEY OFFICE PREFERS USE OF ELECTROMECHANICAL MORTISE LOCKSET OR PANIC DEVICE.

NOTE THAT ELECTRIC STRIKES REQUIRE USE OF PASSIVE INFRARED REQUEST TO EXIT DEVICE (PIR RTE). COORDINATE WITH ELECTRICAL.

C. Electric Strikes: Provide electric door strikes of the appropriate model for the associated door's lock.

1. Manufacturer/Models:
   a. Von Duprin, 6000 series (6112 or 6215).
   b. HES, 1006, 9600, and 9400 series.

BELOW FOR LOW FREQUENCY CLOSET DOORS ONLY.

2.9 LATCHES

A. Touch latches: Latch unit consists of concealed, integral latching mechanism and spring that releases and springs door into open position when face of door is pushed.

1. Manufacturer/Model: Ives No. CL12, complete with related strike.

B. Roller latches: Forged bronze roller latches with rubber roller. Furnish units designed to be mortised into door, and with adjusting screws on face of latch. With each roller latch, furnish companion strike for installation on jamb.

1. Manufacturer/Model: Ives model no. RL30, or equivalent products of Rockwood or Door Controls International.

2.10 STOPS

A. Provide rubber exposed resilient parts; size and mount units to comply with manufacturer's recommendations for the exposure condition. Reinforce the substrate as recommended.

SELECT ONE OF THE FOLLOWING.

1. Color of Resilient Parts: Black.
2. Color of Resilient Parts: Gray.
3. Manufacturer/Model: Rockwood model indicated, or equivalent products of Brookline, Builder's Brass Works, Ives, Stanley, Door Controls International.

SELECT ONE OF THE FOLLOWING TO SUIT PROJECT AND SUBSTRATE.

a. Model No.: 442 (floor mounted).
b. Model No.: 440 (floor mounted, limited door bottom clearance).
c. Model No.: 409 (wall mounted, hollow wall expansion anchor).
d. Model No.: 410 (wall mounted, plastic).
e. Model No.: 411 (wall mounted, expansion shield).

CONSIDER BELOW FOR APPLICATIONS WHERE FIXED STOP IS IMPRACTICAL. TYPICALLY RETAIN FOR HOSPITAL PROJECTS.

VERIFY THAT STOP IS COMPATIBLE WITH CLOSER SPECIFIED. NOTE THAT INTEGRAL STOPS ARE AN OPTION FOR SOME CLOSERS.

B. Concealed overhead door stops: BHMA A156.8

1. Manufacturers/Models:
   a. Glynn-Johnson 410 series.
   b. Rixson 6 series.
   c. Rockwood 14000 series.

2.11 SILENCERS

A. Provide manufacturer's standard profile silencers of 1/8-inch thick hard rubber for metal door frames as follows:

1. Manufacturer: Ives or Rockwood.

2.12 PUSH/PULL SET

A. Provide pull handles and push plates with concealed mounting fasteners wherever possible, and as follows:

SELECT BELOW AS APPROPRIATE TO PROJECT.

1. Material: Solid stainless steel.
2. Material: Solid brass.
3. Material: Solid nylon plastic.

SELECT ONE FINISH BELOW.

4. Finish: Satin.
5. Finish: Polished.
6. Finish: Gloss.

SELECT ONE COLOR OPTION BELOW.

7. Color: Clear and transparent.
8. Color: INSERT COLOR
9. Manufacturers:
   a. Rockwood models indicated.
   b. Baldwin.
   c. Brookline.

d. Builder's Brass Works.
e. Corbin Russwin.
f. Ives
g. Stanley.

BELOW ARE EXAMPLE ONLY, NOT UM STANDARDS

10. Model numbers:
    a. Push Plates: Rockwood; No. 71 (6 inches by 15 inches
    b. Pull: Rockwood; No. 112 (13 inches by 1 inch diameter.
    c. Pull: No. 71 (6 inches by 15 inches) base plate.

EXIT DEVICES BELOW ARE TOUCH PAD STYLE FOR STEEL AND WOOD DOORS ONLY. DEVICES LISTED MAY NOT BE APPROPRIATE FOR ALUMINUM DOORS. REVIEW MANUFACTURER CATALOGS PRIOR TO SELECTION. TUBULAR STYLE DEVICES ARE ALSO ACCEPTABLE (VONDUPRIN 55/88 SERIES).

FOR ACCESS CONTROL APPLICATIONS, TYPICALLY SPECIFY VON DUPRIN QEL TYPE DEVICES OR EQUIVALENT FROM SARGENT. QEL DEVICES OBTAIN POWER FROM POWER SUPPLIES AT THE ACCESS CONTROL PANEL ASSEMBLIES AND DO NOT NEED LOCAL POWER SUPPLIES.

2.13 EXIT DEVICE (PANIC SET)

EXIT DEVICES LISTED BELOW ARE APPROVED BY PLANT DEPARTMENT. USE RIM TYPE DEVICES EXCEPT AT MULLIONLESS DOUBLE DOOR OPENINGS.

APPLICATION: SINGLE DOOR OR DOUBLE DOOR WITH MULLION, WOOD OR STEEL, NON-FIRE-RATED.

A. Non-Fire-Rated Rim Type Exit Device: Rim type units activated by a partial-width touch-bar, complete with accessories, including strike and hex-key operated dogging device mounted on mechanism housing to hold the touch-bar depressed and the latch bolt in the open position.

IT IS STRONGLY RECOMMENDED THAT YOU SELECT APPROPRIATE UNITS AND TRIM FROM CATALOG. USE CHOICES BELOW ONLY FOR VERY SIMPLE PROJECTS.

BELOW IS UNIT WITH OUTSIDE KEY CYLINDER RETRACTING LATCH BOLT, AND WITH OPTIONAL PULL HANDLE. POSSIBLE USE IN PUBLIC BUILDING ENTRANCE AND SECURE CORRIDOR-TO-ROOM ENTRANCE.

a. Manufacturer/Model of Exit Devices: Von Duprin model 98NL with 990NL-R trim; or equivalent products of Sargent only.

BELOW IS UNIT WITH NO OUTSIDE CYLINDER, BUT WITH PULL HANDLE. POSSIBLE USE IN SERIES OF MULLIONED OPENINGS WHERE ANOTHER DOOR HAS CYLINDER FOR ENTRY.

b. Manufacturer/Model of Exit Devices: Von Duprin model 98DT with 990DT trim; or equivalent products of Sargent only.

BELOW IS UNIT WITH NO OUTSIDE CYLINDER AND NO PULL HANDLE. POSSIBLE USE IN SECURED EXIT ONLY FOR BUILDING.

c. Manufacturer/Model of Exit Devices: Von Duprin model 98EO; or equivalent products of Sargent only.

BELOW IS UNIT WITH OUTSIDE CYLINDER. PULL HANDLE MUST BE SPECIFIED SEPARATELY (OPTIONAL VON DUPRIN OR HEWI, FOR EXAMPLE). USE SIMILAR TO FIRST EXAMPLE ABOVE.

d. Manufacturer/Model of Exit Devices: Von Duprin model 98NL-OP with 110NL trim; or equivalent products of Sargent only.

BELOW IS ELECTROMECHANICAL UNIT WITH OUTSIDE CYLINDER AND RIGID LEVER TRIM. OTHER OPTIONS ARE AVAILABLE. NOTE THAT THIS DEVICE CANNOT BE USED FOR FIRE RATED DOORS. SELECT 98 SERIES E-TYPE DEVICE.

2. Electromechanical exit device
   a. Manufacturer/Model of Exit Devices:
      1) Von Duprin model 35A series as follows:
         a) QEL latch retraction
         b) Less dogging
         c) Request to exit switch
         d) Dummy trim 03 lever trim.
      2) Equivalent products of Sargent only.

APPLICATION: SINGLE DOOR OR DOUBLE DOOR WITH MULLION, WOOD OR STEEL, FIRE-RATED.

B. Fire-Rated Rim Type Exit Device: Fire-rated, UL listed, rim type units activated by a partial-width touch-bar, complete with accessories including strike.

IT IS STRONGLY RECOMMENDED THAT YOU SELECT APPROPRIATE UNITS AND TRIM FROM CATALOG. USE CHOICES BELOW ONLY FOR VERY SIMPLE PROJECTS.

BELOW IS UNIT WITH OUTSIDE CYLINDER RETRACTING LATCH BOLT, AND WITH OPTIONAL (RIGID) LEVER HANDLE. POSSIBLE USE IN ELECTRICAL SUBSTATIONS.

a. Manufacturer/Model of Exit Devices: Von Duprin model 98NL-F, 992L-rigid trim, and optional no. 03 lever; or equivalent products of Sargent only.

BELOW IS UNIT WITH DOUBLE CYLINDER. POSSIBLE USE IN RATED, SECURED, CORRIDOR-TO-ROOM ENTRANCE.

b. Manufacturer/Model of Exit Devices: Von Duprin model 98L-F, 992L-double cylinder function trim and standard no. 06 lever; or equivalent products of Sargent only.

BELOW IS UNIT WITH NO OUTSIDE CYLINDER. POSSIBLE USE IN STAIR DOOR APPLICATIONS.

c. Manufacturer/Model of Exit Devices: Von Duprin model 98L-F-BE, 992L-R with optional no. 03 lever; or equivalent products of Sargent only.

APPLICATION: DOUBLE DOORS WITHOUT MULLION, WOOD OR STEEL, NON-FIRE-RATED.

C. Non-Fire-Rated Surface Mounted Vertical Rod Type Exit Device: Surface mounted, vertical rod type units activated by a partial-width touch-bar, complete with accessories including strike. Equip units with hex-key operated dogging device mounted on mechanism housing to hold the touch-bar depressed and the latch bolt in the open position. Omit bottom rods unless otherwise indicated.

IT IS STRONGLY RECOMMENDED THAT YOU SELECT APPROPRIATE UNITS AND TRIM FROM CATALOG. USE CHOICES BELOW ONLY FOR VERY SIMPLE PROJECTS.

BELOW IS UNIT WITH OUTSIDE CYLINDER RETRACTING LATCH BOLT (NIGHT LATCH FUNCTION) AND STANDARD PULL HANDLE. LIMIT USE TO MECHANICAL, ELECTRICAL OR SIMILAR SERVICE ROOMS THAT CAN ACCEPT NIGHT-LATCH FUNCTION - OTHERWISE USE MORTISE TYPE DEVICE WITH DOUBLE CYLINDER (SEE SUBSEQUENT PARA BELOW). USE IN CONJUNTION BLANK ESCUTCHEON FUNCTION DEVICE BELOW ON OTHER DOOR OF PAIR.

a. Manufacturer/Model of Exit Devices: Von Duprin model 9827NL, 990NL-V trim; or equivalent products of Sargent only.

BELOW IS UNIT WITH BLANK ESCUTCHEON AND STANDARD PULL HANDLE. USE IN CONJUNCTION WITH NIGHT LATCH FUNCTION UNIT ABOVE.

b. Manufacturer/Model of Exit Devices: Von Duprin model 9872NL-BE, 990NL-V trim; or equivalent products of Sargent only.

BELOW IS UNIT WITH BLANK ESCUTCHEON AND OPTIONAL LEVER HANDLE. USE IN CONJUNCTION WITH NON-FIRE-RATED MORTISE UNIT (SEE SUBSEQUENT PARA BELOW).

c. Manufacturer/Model of Exit Devices: Von Duprin model 9827L-BE, 992L-rigid trim; or equivalent products of Sargent only.

APPLICATION: DOUBLE DOORS WITHOUT MULLION, WOOD OR STEEL, FIRE-RATED.

D. Fire-Rated Surface Mounted Vertical Rod Type Exit Device: Fire-rated, UL listed, surface mounted, vertical rod type units activated by a partial-width touch-bar, complete with accessories including strike.

IT IS STRONGLY RECOMMENDED THAT YOU SELECT APPROPRIATE UNITS AND TRIM FROM CATALOG. USE CHOICES BELOW ONLY FOR VERY SIMPLE PROJECTS.

BELOW IS UNIT WITH OUTSIDE CYLINDER RETRACTING LATCH BOLT, AND WITH OPTIONAL (RIGID) LEVER HANDLE (PULL COULD ALSO BE USED - SPEC 9827NL-F). LIMIT USE TO MECHANICAL, ELECTRICAL OR SIMILAR SERVICE ROOMS THAT CAN ACCEPT NIGHT-LATCH FUNCTION - OTHERWISE USE MORTISE TYPE DEVICE WITH DOUBLE CYLINDER (SEE SUBSEQUENT PARA BELOW). USE IN CONJUNTION WITH EXIT ONLY FUNCTION DEVICE (9827EO-F) ON OTHER DOOR OF PAIR.

a. Manufacturer/Model of Exit Devices: Von Duprin model 9827L-F, 992L-rigid trim with optional no. 03 lever; or equivalent products of Sargent only.

BELOW IS UNIT WITH NO OUTSIDE TRIM FOR EXIT ONLY. USE THIS UNIT IN CONJUNCTION WITH EITHER VERTICAL SURFACE ROD DEVICE IMMEDIATELY ABOVE OR MORTISE UNIT WITH DOUBLE CYLINDER DESCRIBED IN SUBSEQUENT PARA BELOW.

b. Manufacturer/Model of Exit Devices: Von Duprin model 9827EO-F; or equivalent products of Sargent only.

APPLICATION: DOUBLE DOORS WITHOUT MULLION, WOOD OR STEEL, NON-FIRE-RATED. THE ONLY SANCTIONED USE OF THE MORTISE DEVICE BELOW IS IN A MULLIONLESS OPENING AS PART OF A PAIR, WITH THE OTHER DEVICE A VERTICAL SURFACE ROD TYPE.

E. Non-Fire-Rated Mortise Type Exit Device: Surface mounted, vertical rod type units activated by a partial-width touch-bar, complete with accessories including strike. Equip units with hex-key operated dogging device mounted on mechanism housing to hold the touch-bar depressed and the latch bolt in the open position. Omit bottom rods unless otherwise indicated.

IT IS STRONGLY RECOMMENDED THAT YOU SELECT APPROPRIATE UNITS AND TRIM FROM CATALOG. USE CHOICES BELOW ONLY FOR VERY SIMPLE PROJECTS.

BELOW IS UNIT WITH OUTSIDE CYLINDER RETRACTING LATCH BOLT, AND WITH OPTIONAL DOUBLE CYLINDER INSTALLED INSIDE ON LATCH HEAD. THIS COMBINATION IMPROVES LOCKING FUNCTION FLEXIBIITY AND IS PREFERRED BY PLANT. USE AS ONE OF A PAIR IN A MULLIONLESS OPENING, WITH THE OTHER DOOR EQUIPPED WITH DEVICE HAVING VERTICAL SURFACE RODS AND BLANK ESCUTCHEON FUNCTION INDICATED IN NON-FIRE-RATED DEVICE PARA ABOVE (9827NL-BE OR 9872L-BE).

a. Manufacturer/Model of Exit Devices: Von Duprin model 9875L, 992L-M-double cylinder trim, and with optional no. 03 lever; or equivalent products of Sargent only.

BELOW IS UNIT SAME AS ABOVE, EXCEPT FOR APPLICATIONS THAT DO NOT REQUIRE SECURED (LOCKABLE) DOORS. USE AS ONE OF A PAIR IN A MULLIONLESS OPENING, WITH THE OTHER DOOR EQUIPPED WITH DEVICE HAVING VERTICAL SURFACE RODS AND BLANK ESCUTCHEON FUNCTION INDICATED ABOVE (9827NL-BE OR 9872L-BE).

b. Manufacturer/Model of Exit Devices: Von Duprin model 9875L-F-BE, and with optional no. 03 lever; or equivalent products of Sargent only.

APPLICATION: DOUBLE DOORS WITHOUT MULLION, WOOD OR STEEL, FIRE-RATED. THE ONLY SANCTIONED USE OF THE MORTISE DEVICE BELOW IS IN A MULLIONLESS OPENING AS PART OF A PAIR, WITH THE OTHER DEVICE A VERTICAL SURFACE ROD TYPE. WHERE THE SELECTIONS INDICATED WOULD INTERFERE WITH TWO-WAY CORRIDOR TRAFFIC, AND A MULLIONED OPENING CANNOT BE SUBSTITUTED, CONSIDER PROVIDING ELECTRIC HOLD-OPEN DEVICES.

F. Fire-Rated Mortise Type Exit Device: Fire-rated, UL listed, mortise type units activated by a partial-width touch-bar, complete with accessories including strike.

IT IS STRONGLY RECOMMENDED THAT YOU SELECT APPROPRIATE UNITS AND TRIM FROM CATALOG. USE CHOICES BELOW ONLY FOR VERY SIMPLE PROJECTS.

BELOW IS UNIT WITH OUTSIDE CYLINDER RETRACTING LATCH BOLT, AND WITH OPTIONAL DOUBLE CYLINDER INSTALLED INSIDE ON LATCH HEAD. THIS COMBINATION IMPROVES LOCKING FUNCTION FLEXIBIITY AND IS PREFERRED BY PLANT. USE AS ONE OF A PAIR IN A MULLIONLESS OPENING, WITH THE OTHER DOOR EQUIPPED WITH DEVICE HAVING VERTICAL SURFACE RODS AND EXIT-ONLY FUNCTION (9827EO-F).

a. Manufacturer/Model of Exit Devices: Von Duprin model 9875L-F, 992L-M-double cylinder trim, and with optional no. 03 lever; or equivalent products of Sargent only.

BELOW IS UNIT SAME AS ABOVE, EXCEPT FOR APPLICATIONS THAT DO NOT REQUIRE SECURED (LOCKABLE) DOORS. USE AS ONE OF A PAIR IN A MULLIONLESS OPENING, WITH THE OTHER DOOR EQUIPPED WITH DEVICE HAVING VERTICAL SURFACE RODS AND EXIT-ONLY FUNCTION (9827EO-F).

b. Manufacturer/Model of Exit Devices: Von Duprin model 9875L-F-BE, 992L-M trim and with optional no. 03 lever; or equivalent products of Sargent only.

2.14 ASTRAGALS

A. Manufacturer/Model of Astragals: EXAMPLE Pemko; No. 357SP, or equivalent products of National Guard, Reese, Zero.

2.15 FLUSH BOLTS

DO NOT EDIT WITHOUT PRODUCT CATALOG.

A. Manual Flush Bolts: Mortise units, UL listed and rated for indicated application, with spring loaded snap action levers for manual operation.

USE BELOW ON RATED DOORS WHERE INACTIVE LEAF NOT REQUIRED FOR EGRESS.

1. Manufacturer/Model of Manual Flush Bolts: Provide Ives model numbers indicated or equivalent products of Rockwood or Door Controls International, as follows:

DELETE INAPPROPRIATE TYPES BELOW.

a. Metal Doors: FB458, both top and bottom bolts.
b. Wood Doors: FB358, both top and bottom bolts.

SELECT ONE OF THE FOLLOWING.

c. Dust Proof Strike: DP1 (threshold mounting).
d. Dust Proof Strike: DP2 (floor or threshold mounting).

USE BELOW FOR EASIER OPERATION AND WHERE INACTIVE LEAF IS NOT REQUIRED FOR EGRESS.

B. Constant Latching Flush Bolts: Mortise units, UL listed and rated for indicated application, with automatically retracting bottom bolt, and manually released top bolt when active leaf is opened.

1. Manufacturer/Model of Constant Latching Flush Bolts: Provide Ives model numbers indicated or equivalent products of Rockwood or Door Controls International, as follows:

DELETE INAPPROPRIATE TYPES BELOW.

a. Metal Doors: FB51P (includes both top and bottom bolts).
b. Wood Doors: FB61P (includes both top and bottom bolts).

SELECT ONE OF THE FOLLOWING

c. Dust Proof Strike: DP1 (threshold mounting).
d. Dust Proof Strike: DP2 (floor or threshold mounting).

USE BELOW WHERE INACTIVE LEAF IS REQUIRED FOR EGRESS.

C. Automatic Flush Bolts: Mortise units, UL listed and rated for indicated application, automatically retracting when active leaf is opened.

1. Manufacturer/Model of Automatic Flush Bolts: Provide Ives model numbers indicated or equivalent products of Rockwood or Door Controls International, as follows:

DELETE INAPPROPRIATE TYPES BELOW.

a. Metal Doors: FB31P, (includes both top and bottom bolts).
b. Wood Doors: FB41P, (includes both top and bottom bolts).

SELECT ONE OF THE FOLLOWING.

c. Dust Proof Strike: DP1 (threshold mounting).
d. Dust Proof Strike: DP2 (floor or threshold mounting).

2.16 COORDINATOR

DO NOT EDIT WITHOUT PRODUCT CATALOG.

A. Device coordinating pair of doors with astragals ensuring proper closing sequence. Provide coordinators complete with carry-bar and UL listed and rated for indicated application.

1. Manufacturer/Model of Coordinator: Ives model numbers indicated, or equivalent products of Rockwood or Door Controls International, as follows:

MODEL NUMBERS BELOW ARE FOR TYPICAL APPLICATIONS. CONSULT PRODUCT CATALOG FOR SIZES NOT LISTED BELOW.

USE BELOW FOR PAIR OF 2'-6" DOORS IN 5'-0" OPENING OR UNEQUAL PAIR OF DOORS IN 4'-0" OPENING (3'-0" ACTIVE LEAF WITH 1'-0" INACTIVE LEAF).

a. Model: COR-42.

USE BELOW FOR PAIR OF 3'-0" DOORS IN 6'-0" OPENING.

b. Model: COR-52.

USE BELOW FOR PAIR OF 3'-6" DOORS IN 7'-0" OPENING.

c. Model: COR-60.

2.17 TRIM PROTECTOR BARS

A. Provide type 304 stainless steel bent bar shape fabricated of 3/8-inch thick, 1-1/2-inch wide stock. Fabricate units 12-inches long overall with 4-inch long straight section for under-lever mounting.

MOST COMMON UNITS LISTED BELOW - OTHER SHAPES AND MOUNTING CONDITIONS ARE AVAILABLE.

1. Manufacturer/Model of Trim Protector Bars: Subject to compliance with requirements provide the following:
   a. Solid Core Wood Doors: R110LPB; Rockwood Products Incorporated.
   b. Hollow Metal Doors: R111LPB; Rockwood Products Incorporated.
   c. Hollow Core Wood Doors: R112LPB; Rockwood Products Incorporated.

2.18 KICKPLATES

A. Provide solid metal units as follows:

SELECT ONE MATERIAL BELOW.

1. Material: Stainless steel.
2. Material: Brass satin.

SELECT ONE FINISH BELOW.

3. Finish: Polished.
4. Finish: Satin.
5. Size: 1 1/2 inches less than door width on push side, 1/2 inch less than door width on pull side, by 8 inches high, by 0.050-inch thick.
6. Manufacturer/Model of Kickplates: EXAMPLE Rockwood K1050 series, 8 inches high or equivalent by any BHMA member.

THE FOLLOWING PRODUCT IS NOT UL LISTED FOR FIRE RATED DOORS.

B. Provide non-colored, transparent acrylic plastic units as follows:

1. Size: 1 1/2 inches less than door width on push side, 1/2 inch less than door width on pull side, by 8 inches high, by 1/4 inch thickness.
2. Manufacturer/Model of Kickplates: EXAMPLE Rockwood K4125, 8 inches high or equivalent products by any BHMA member.

2.19 SWEEP SEALS

A. Provide manufacturer's standard weatherstripping of type, size and profile indicated, continuous at bottom edges of each indicated door. Provide non-corrosive fasteners.

SUFFIX BELOW IS FOR CLEAR ANODIZED ALUMINUM FINISH. CHANGE SUFFIX TO "D" FOR DARK BRONZE ANODIZED ALUMINUM.

1. Manufacturer/Model Sweep Seals: EXAMPLE Pemko; No. 18062CNB, or equivalent products by any BHMA member.

2.20 JAMB SEALS

BELOW FOR STANDARD LIGHT-TIGHT DOORS - CONSIDER INCLUDING THRESHOLD FOR ADDITIONAL LIGHT-TIGHTNESS.

A. Provide manufacturer's standard weatherstripping of type, size and profile indicated, continuous at head and jamb edges of each indicated door opening. Provide non-corrosive fasteners.

"CR" SUFFIX BELOW IS FOR CLEAR ANODIZED ALUMINUM FINISH. CHANGE TO "DR" SUFFIX FOR DARK BRONZE ANODIZED ALUMINUM.

1. Manufacturer/Model Jamb Seals: EXAMPLE Pemko; No. 315CR, or equivalent products by any BHMA member.

BELOW FOR SOUND-PROOFING - CONSIDER INCLUDING THRESHOLD TO ASSIST SOUND-PROOFING.

B. Provide manufacturer's standard sound attenuating jamb and head seals of type, size, and profile indicated, continuous at head and jamb edges of scheduled door openings. Provide units with noncorrosive fasteners.

1. Manufacturer/Model: Pemko No. 350 CSR, or equivalent products by any BHMA member.

2.21 AUTOMATIC DOOR BOTTOM

NOTE THAT AUTOMATIC DOOR BOTTOMS CAN INCREASE DOOR OPENING FORCE REQUIREMENTS AND IMPEDE LATCHING IF NOT PROPERLY ADJUSTED. USE ONLY WHEN REQUIRED FOR SOUND ATTENUATION, RODENT ROOMS AND OTHER SPECIFIC APPLICATIONS. TYPICALLY, LIGHT SEALS CAN BE SATISFACTORILY ACCOMPLISHED USING A SWEEP SEAL/THRESHOLD COMBINATION. AVOID SPECIFYING FULLY MORTISED UNITS (DIFFICULT TO MAINTAIN) AND SURFACE MOUNTED UNITS (NOT ADA COMPLIANT)

A. Provide manufacturer's standard units of type, size and profile indicated, continuous at bottom of indicated door opening. Provide non-corrosive fasteners.

BELOW IS NON-HANDED SEMI-MORTISED UNIT WITH SPONGE NEOPRENE SEAL. BE SURE TO INCLUDE LOW PROFILE THRESHOLD WHEN SPECIFYING A DOOR BOTTOM OVER CARPET.

"C" SUFFIX BELOW IS FOR CLEAR ANODIZED ALUMINUM FINISH. CHANGE TO "D" SUFFIX FOR DARK BRONZE ANODIZED ALUMINUM.

1. Manufacturer/Model Automatic Door Bottoms: EXAMPLE Semi-mortised Pemko; No. 4301CRL, or equivalent products by any BHMA member.

2.22 ELECTRICALLY ACTIVATED MAGNETIC HOLD-OPEN DEVICE

COORDINATE THIS EQUIPMENT WITH ELECTRICAL ENGINEER. ELECTRICAL SHEETS SHOULD SHOW WIRING, CONDUIT AND BOXES REQUIRED FOR AUTOMATIC HOLD-OPEN DEVICES.

A. Provide units consisting of a silently-operating wall-mounted electromagnet in electrical box with cover plate and door-mounted contact plate. Provide contact plate with swivel adjustment that adjusts to door contact angle indicated on drawings. Provide units that UL and FM listed.

1. Minimum holding force: 25 lbs.
2. Operating Voltage: 24 V. AC.
3. Finish: Brushed zinc on all visible components.

SELECT ONE OF THE FOLLOWING.

4. Manufacturer/Model:
   a. Surface-mounted: LCN model SEM7830, Sargent 1560, Rixson 900 series.
   b. Flush-mounted: LCN model SEM7840, Sargent 1561, Rixson 900 series.

2.23 THRESHOLDS

A. Provide manufacturer's standard, extruded, anodized aluminum units of type, size, and profile indicated, and complying with applicable portions of the Americans with Disabilities Act (ADA). Provide units continuous across bottom of door openings. Provide noncorrosive fasteners.

MODEL NUMBER BELOW IS FOR A LATCHING PANIC THRESHOLD. LATCHING PANIC THRESHOLDS ARE DESIGNED TO WORK IN CONJUNCTION WITH SURFACE APPLIED VERTICAL ROD EXIT DEVICES. THEY ARE ALSO USED TO PROVIDE A DOOR STOP AND SEAL AT THE BOTTOM OF THE DOOR FOR LIGHT AND SOUND ATTENUATION.

CONSULT MANUFACTURER'S CATALOG FOR OTHER APPLICATIONS: CHANGE IN FLOOR LEVEL, THERMAL BARRIER, ETC

1. Manufacturer/Model: Pemko No. 2005AT, or equivalent products by any BHMA member.

MODEL NUMBER BELOW IS A LOW PROFILE THRESHOLD FOR USE WITH AN AUTOMATIC DOOR BOTTOM OVER CARPET.

2. Manufacturer/Model: Pemko No. 2364A, or equivalent products by any BHMA member.

CONSIDER REMOVABLE MULLIONS BELOW WHERE FIXED MULLIONS CANNOT BE PROVIDED. COORDINATE WITH ALUMINUM ENTRANCES AND STOREFRONTS SECTION.

2.24 REMOVABLE MULLION

BELOW IS NON-KEYED REMOAVABLE MULLION FOR ALUMINUM ENTRANCES. MODEL LISTED IS NOT COMPATIBLE WITH ELECTRIC STRIKES.

A. Aluminum mullion: Provide removable mullion with weatherstripping, stabilizer set, and indicated door strikes.

SELECT FINISH. DARK BRONZE ANODIZED IS TYPICALLY APPLICABLE TO ALUMINUM ENTRANCES.

1. Finish: 313AN dark bronze anodized.
2. Manufacturer/Model:

BELOW IS NON-RATED DEVICE

a. Von Duprin 5654, with weatherstripping and 154 stabilizer set or equivalent by Sargent.

BELOW IS KEYED ROBUST MULLION FOR HIGH TRAFFIC OPENINGS. IT DOES NOT HAVE WEATHERSTRIPPING FOR INFILTRATION/NOISE REDUCTION.

B. Galvanized steel mullion: Provide units with keyed mechanism for quick removal of mullion; mortised cylinder equipped with space for building standard 7-pin SFIC. Unit shall self-lock upon reinstallation.

SELECT FINISH. DARK BRONZE COLOR AND FLUOROPOLYMER IS APPLICABLE TO ALUMINUM ENTRANCES

1. Finish: SP313 dark bronze painted finish.
2. Finish: Two-coat fluoropolymer finish as selected by Architect to match framing.
3. Manufacturer/Model:

BELOW IS NON-RATED DEVICE

a. Von Duprin KR4954, with 154 stabilizer set or equivalent by Sargent.

BELOW IS RATED DEVICE. NOTE THAT THIS MULLION IS NOT EASILY REMOVED.

b. Von Duprin KR9954, with 154 stabilizer set or equivalent by Sargent.

2.25 CONCEALED POWER TRANSFER

INCLUDE BELOW TO TRANSFER POWER FROM FRAME TO DOOR FOR DOORS WITH ELECTRIFIED MORTISE LOCKSET OR EXIT DEVICE. ELECTRIFIED HINGES ARE TYPICALLY NOT USED. COORDINATE WITH ELECTRICAL ENGINEER.

NOTE THAT EPT WILL VOID RATING OF EXISTING RATED DOOR / FRAME ASSEMBLY. IF RATING IS REQUIRED, SHOULD BE SPECIFIED WITH NEW DOORS AND FRAMES ONLY.

A. Provide mortised electric power transfer device that is completely concealed when the door is in the closed position. Device shall be equipped with sufficient number and gage of conductors to accommodate function for hardware specified.

1. Manufacturer/Model:
   Securitron EPT
   Von Duprin EPT

B. Armored door cords, electric hinges and other power transfer devices are not permitted.

2.26 WIRING HARNESS

INCLUDE BELOW TO CONNECT POWER FROM CONCEALED POWER TRANSFER TO ELECTROMECHANICAL LOCKSET.

A. Provide manufacturer's quick connect wiring harness between concealed power transfer and electromechanical locking device. Harness shall have connectors on the lockset end, crimped pins on the other. Size harness as needed for door.

1. Manufacturer/Model:
   Allegion Connect

2.27 DOOR POSITION SWITCH

TYPICALLY DELETE BELOW - SPECIFIED IN DIV 28 ACCESS CONTROL SPEC. COORDINATE WITH ELECTRICAL.

A. Provide low voltage recessed position sensor with ABS plastic enclosure.

1. Manufacturer/Model: UTC Interlogix 1078 Series only.

2.28 FINISHES

A. Provide finishes complying with BHMA A156.18 as follows.

SELECT FINISHES FROM LIST BELOW, OR REVISE TO SUIT PROJECT. GENERALLY MATCH HARDWARE FINISH OF ADJACENT WORK IN BUILDING. CONTACT A LOCKSMITH AT THE KEY OFFICE WITH QUESTIONS REGARDING SPECIFIC FINISH FOR EACH BUILDING.

1. US 10 (satin bronze).
2. US 10B (oil rubbed bronze)
3. US 26D (dull chrome).
4. US 32D (satin stainless).

B. Protect mechanical finishes on exposed surfaces from damage by applying a strippable, temporary protective covering before shipping.

C. Appearance of Finished Work: Noticeable variations in the same piece are not acceptable.

D. Standards: Where base material and quality of finish are not otherwise specified, comply with ANSI A 156 series standards applicable to each particular type of hardware.

PART 3 - EXECUTION

3.1 INSTALLATION

A. General: Install each hardware item to comply with manufacturer's printed installation instructions and recommendations for application indicated, unless otherwise indicated by referenced standard or by provisions of this Section.

B. Hardware Mounting Heights: Door and Hardware Institute "Recommended Locations for Builder's Hardware for Custom Steel Doors and Frames".

DELETE THE FOLLOWING IF NO NEW HARDWARE INSTALLED ON EXISTING DOORS OR ON NEW DOORS IN EXISTING FRAMES.

C. Hardware at Existing Doors and Frames:

1. Match existing hardware preparation heights on door or frame to be reused.

DELETE THE FOLLOWING PARA AND SUBPARAS IF NEW LOCKSETS OR LATCHSETS ARE NOT INSTALLED IN CONJUNCTION WITH EXISTING FRAMES.

2. Where new locksets are indicated to be installed at openings with an existing door frame, verify the compatibility of the existing strike plate and cut-out locations with the new hardware.
   a. Where no existing strike exists, or where the new lockset cannot be located at a height matching the existing strike, cut out metal frames and provide new insert tabs, or rout out wood frames, as required to fully mortise the new strike plate.

DELETE SUBPARA ABOVE OR BELOW IF NOT APPLICABLE TO PROJECT.

   b. Where an existing strike plate and cut-out is not of suitable size or configuration to ensure proper operation of the lockset, including protection of frame finish, modify or replace strike plate, as practicable. Where new strike plates are required, modify frame as required for a fully mortised installation and install custom-fabricated replacement strike plates to accurately fit within existing mortise cut-outs.

D. Sound-Attenuating Seals and other Acoustic Barrier Components: Install complete length of door edges, with tight joints to components on adjacent door edges. No gaps at any point around the door perimeter are allowed. Coordinate closer selection and installation (if applicable) to ensure compatibility with seals.

E. Silencers: Install silencers as follows:

1. Single Door Frames: Install three, equally spaced silencers on the latch jamb of new hollow metal door frames.

DELETE ABOVE AND BELOW TO SUIT PROJECT.

2. Double Door Frames: Install two silencers on the head of each new hollow metal double door frame.

DELETE BELOW IF NOT APPLICABLE, OR MODIFY TO SUIT PROJECT CONDITIONS.

3. Existing Door Frames: Where new doors are scheduled to be installed in new frames, or where new hardware is scheduled to be installed on existing doors, inspect existing silencers and replace damaged and defective units.

ALWAYS INCLUDE BELOW FOR PROJECTS WITH ACCESS CONTROL AND EXIT DEVICES.

F. Coordination with access control installation:

1. Electrified exit devices:

INCLUDE BELOW FOR RETROFIT APPLICATIONS ONLY

a. Coordinate installation of electrified exit devices / electrification kits with access control system installation such that system is immediately ready to support electrified locking / unlocking of the device.

RETAIN BELOW IF ADDING ACCESS CONTROL TO EXISTING DOORS WITH EXIT DEVICES.

2. Exit device dogging:

a. Remove dogging capability and provide replacement cover plate on existing door hardware added to access control system.

INCLUDE BELOW FOR PROJECTS WITH ACCESS CONTROL.

3.2 COMMISSIONING

A. Perform the commissioning activities as outlined in the Division 1 Section titled Commissioning and other requirements of the Contract Documents.

3.3 ADJUSTING

A. Initial Adjustment: Adjust and check each operating item of door hardware and each door to ensure proper operation or function of every unit. Replace units that cannot be adjusted to operate as intended.

EDIT BELOW TO SUIT PROJECT REQUIREMENTS.

1. Electric Strikes: Adjust horizontal and vertical alignment of keeper to properly engage lock bolt.
2. Door Closers: Adjust sweep period and operating force to comply with accessibility requirements and ensure proper door function.

NOT REQUIRED FOR MOST SMALL PROJECTS. REVIEW WITH KEY OFFICE, CLIENT AND CM IF RETAINED TO ENSURE ENFORCEMENT.

B. Post occupancy adjustment: Return to project one month after Owner's occupancy, and adjust hardware to proper operation and function. Instruct Owner's personnel in proper maintenance and adjustment.

3.4 HARDWARE SET SCHEDULE

EXAMPLES FOLLOW, REVISE TO SUIT PROJECT.

A. Set No. 1:

Office Lockset
Butt Hinges (1-1/2 pr.)
Closer
Stop

B. Set No. 2:

Office Lockset with automatic unlocking
Butt Hinges (1-1/2 pr.)
Stop
Kickplate

C. Set No. 3:

Active Leaf
- Classroom Lockset
- Butt Hinges (1-1/2 pr.)
- Closer
- Stop
- Astragal
- Kickplate

Inactive Leaf
- Automatic Flush Bolts (1 pr.)
- Butt Hinges (1 1/2 pr)
- Closer
- Stop
- Kickplate

END OF SECTION 087100

UNIVERSITY OF MICHIGAN
ARCHITECTURE, ENGINEERING AND CONSTRUCTION

ARCHITECTURE & ENGINEERING
326 East Hoover, Mail Stop B
Ann Arbor, MI 48109-1002
Phone: 734-764-3414
Fax: 734-936-3334

BuildingName
The Description of the Project
P00000000 0000

SPECIFICATION DIVISION 8

NUMBER SECTION DESCRIPTION

DIVISION 08 OPENINGS
SECTION 088000 - GLAZING

END OF CONTENTS TABLE

DIVISION 08 OPENINGS
SECTION 088000 - GLAZING

UPDATED TO INCORPORATE CURRENT MANUFACTURERS AND CURRENT CODES, INCLUDING ENERGY CODES.

USE THIS SECTION FOR EXTERIOR APPLICATIONS. INTERIOR GLAZING IS COVERED IN ANOTHER DIVISION 08 SECTION. THIS SECTION DOES NOT INCLUDE SLOPED GLAZING. ADD IF NEEDED FOR PROJECT.

THIS SECTION WILL ALMOST ALWAYS BE ACCOMPANIED BY SECTIONS 084113, 085113, AND/OR 084413. EDIT THIS SECTION AFTER THE OTHER SECTIONS ARE SUBSTANTIALLY COMPLETE. NOTE THAT THERMAL PERFORMANCE VALUES (U-VALUE AND SOLAR HEAT GAIN COEFFICIENT) ARE SPECIFIED IN THESE OTHER SECTIONS BECAUSE ASHRAE 90.1 REQUIRES THE VALUES TO BE FOR THE ENTIRE ASSEMBLY, NOT JUST FOR CENTER-OF-GLASS.

FOR PROJECTS LIMITED TO REPLACEMENT OF GLASS, SEE EDITOR'S NOTES IN PART 2.

PART 1 - GENERAL

1.1 RELATED DOCUMENTS

A. Drawings and general provisions of the Contract, including Standard General Conditions, Supplemental General Conditions, Division 01 Specification Sections, and other applicable Specification Sections, apply to this Section.

B. Related Sections:

1. Division 07 Section "Joint Sealants".
2. Division 08 Section "Aluminum-Framed Entrances & Storefronts"
3. Division 08 Section "Aluminum Windows".
4. Division 08 Section "Glazed Aluminum Curtain Walls".

1.2 SUMMARY

A. Section Includes: Glass and glazing work for both field and pre-glazed units for the following types:

MODIFY LISTING BELOW TO SUIT PROJECT.

1. Window units.
2. Glazed curtain wall.
3. Storefront framing.
4. Entrances and other doors.
5. Skylight units.
6. Sloped glazing systems.
7. Replacement of glazing in existing aluminum framing.

1.3 DEFINITIONS

DELETE DEFINITIONS BELOW IF NOT APPLICABLE TO PRODUCTS RETAINED FOR PROJECT.

A. Interspace: Space between lites of an insulating-glass unit that contains dehydrated air or a specified gas.

B. Deterioration of Coated Glass: Defects developed from normal use which are attributed to the manufacturing process and not to causes other than glass breakage and practices for maintaining and cleaning coated glass contrary to manufacturer's written instructions. Defects include peeling, cracking, and other indications of deterioration in metallic coating.

C. Deterioration of Insulating Glass: Failure of hermetic seal under normal use that is attributed to the manufacturing process and not to causes other than glass breakage and practices for maintaining and cleaning insulating glass contrary to manufacturer's written instructions. Evidence of failure is the obstruction of vision by dust, moisture, or film on interior surfaces of glass.

D. Deterioration of Laminated Glass: Defects developed from normal use that are attributed to the manufacturing process and not to causes other than glass breakage and practices for maintaining and cleaning laminated glass contrary to manufacturer's written instructions. Defects include edge separation, delamination materially obstructing vision through glass, and blemishes exceeding those allowed by referenced laminated-glass standard.

1.4 SUBMITTALS

A. Product data including manufacturer's technical data for each glazing material and fabricated glass product required; installation and maintenance instructions.

B. Samples for initial selection, consisting 12-inch square samples of the full range of manufacturer's standard product line for the following types of glass units:

USUALLY DELETE FIRST EXAMPLE BELOW. RETAIN ONLY IF PROJECT INCLUDES TINTED GLASS.

1. Tinted glass.
2. Low-emissivity coated glass.

C. Samples for verification purposes, of 1 set of 12-inch square samples of each type of glass indicated except for clear single pane units.

USUALLY DELETE BELOW.

1. Provide 1 set of 12-inch long samples of each color required (except black) for each gasket sample between two strips of material representative of adjoining framing system in color.

D. Certificate: Submit certificates from respective manufacturers attesting that glass and glazing materials furnished for project comply with requirements.

USUALLY RETAIN BELOW.

1. Separate certification will not be required for glazing materials bearing manufacturer's permanent labels designating type and thickness of glass, provided labels represent a quality control program involving a recognized certification agency or independent testing laboratory acceptable to Owner.

DELETE PARAGRAPH BELOW IF NO COMPATIBILITY TESTING IS REQUIRED UNDER "PERFORMANCE REQUIREMENTS" ARTICLE.

E. Compatibility and Adhesion Test Report: Submit statement from sealant manufacturer indicating that glass and glazing materials have been tested for compatibility and adhesion with glazing sealants and interpreting test results relative to material performance, including recommendations for primers and substrate preparation needed to obtain adhesion.

USUALLY RETAIN PARAGRAPH BELOW.

F. Delegated-Design Submittal: For glass indicated to comply with performance requirements and design criteria, including analysis data signed and sealed by the qualified professional engineer responsible for their preparation.

1.5 QUALITY ASSURANCE

A. Manufacturers and Products: The products and manufacturers specified in this Section establish the standard of quality for the Work. Subject to compliance with all requirements, provide specified products from the manufacturers named in Part 2.

ALWAYS INCLUDE BELOW IF INSULATING GLASS IS TO BE PROVIDED ON PROJECT.

B. Insulating Glass Manufacturers: Provide insulating glass manufactured by firm with at least 5 years of experience with similar projects and possessing current IGCC membership.

1. Insulating Glass Certification Program: Provide insulating glass units permanently marked either on spacers or at least one component pane of units with appropriate certification label of Insulating Glass Certification Council (IGCC).

C. Single Source Responsibility for Glass: To ensure consistent quality of appearance and performance, provide materials produced by a single manufacturer or fabricator for each kind and condition of glass indicated and composed of primary glass obtained from a single source for each type and class required.

D. Glazing Publications: Comply with published recommendations of glass product manufacturers and organizations below, unless more stringent requirements are indicated. Refer to these publications for glazing terms not otherwise defined in this Section or in referenced standards.

EDIT TO BE PROJECT SPECIFIC

1. Glass Association of North America (GANA) Publications: GANA Glazing Manual [and GANA Laminated Glass Reference Manual].
2. IGMA Publication for Insulating Glass: SIGMA TM-3000, "North American Glazing Guidelines for Sealed Insulating Glass Units for Commercial and Residential Use.".

RETAIN PARAGRAPH AND SUBPARAGRPHS BELOW ONLY FOR GLASS INSTALLED WITH GLAZING SEALANTS.

E. Preconstruction Adhesion and Compatibility Testing: Submit to elastomeric glazing sealant manufacturers, for testing according to ASTM C 1087, samples of each glazing material type, tape sealant, gasket, glazing accessory, and glass-framing member that will contact or affect elastomeric glazing sealants:

1. Use test methods standard with sealant manufacturer to determine if priming and other specific preparation techniques are required for rapid, optimum glazing sealants adhesion to glass and glazing channel substrates.
   a. Perform tests under normal environmental conditions during installation.
2. Submit not less than nine pieces of each type and finish of glass-framing members and each type, class, kind, condition, and form of glass (monolithic, insulating units) for adhesion testing, as well as one sample of each glazing accessory (gaskets, setting blocks and spacers) for compatibility testing.
3. Schedule sufficient time to test and analyze results to prevent delay in the Work.
4. Investigate materials failing compatibility or adhesion tests and get sealant manufacturer's written recommendations for corrective measures, including using special primers.
5. Testing is not required when glazing sealant manufacturer can submit required preparation data that is acceptable to Architect and is based on previous testing of current sealant products for adhesion to and compatibility with submitted glazing materials.

DELETE BELOW IF NO SAFETY GLAZING IS REQUIRED. COORDINATE WITH PART 2 ARTICLES SPECIFYING MONOLITHIC, INSULATING AND LAMINATED GLASS PRODUCTS.

F. Safety Glazing Standard: Comply with the following:

1. Provide safety glass where indicated and where otherwise required by the Michigan Building Code.

REVISE PARAGRAPH BELOW FROM CATEGORY II MATERIALS TO CATEGORY I MATERIALS IF GLASS PANES ARE STATIONARY OR IN SWINGING DOORS AND ARE LESS THAN 9 SF IN AREA. REFER TO HTTP://WWW.ACCESS.GPO.GOV/NARA/CFR/WAISIDX_03/16CFR1201_03.HTML FOR COMPLETE DESCRIPTION OF CATEGORY I AND CATEGORY II MATERIALS.

2. Where safety glass is indicated, provide type of products indicated which comply with ANSI Z97.1 and testing requirements of 16 CFR Part 1201 for category II materials.
   a. Subject to compliance with requirements, provide safety glass permanently marked with certification label of Safety Glazing Certification Council (SGCC) or other certification agency acceptable to Owner.

PARAGRAPH BELOW IS USEFUL IN TRYING TO INSURE THAT COLOR OF LOW-E GLAZING DOESN'T VARY EXCESSIVELY FROM PANE TO PANE.

G. Sealed Insulating Glass Units: In addition to other requirements of this section, comply with ASTM D2244. Obtain written acceptance by the Architect and the Owner's representative of permissible color tolerance between test specimen and reference and the procedure for calculating the color tolerance. Each material and condition of use may require specific color tolerances.

1.6 DELIVERY, STORAGE AND HANDLING

A. Protect glass and glazing materials during delivery, storage, and handling to comply with manufacturer's directions and as required to prevent edge damage to glass, and damage to glass and glazing materials from effects of moisture including condensation, of temperature changes, of direct exposure to sun, and from other causes.

1. Glass shall be fully identified, and each pane shall be clearly labeled with manufacturer's name and product designation.

1.7 PROJECT CONDITIONS

A. Environmental Conditions: Do not proceed with glazing when ambient and substrate temperature conditions are outside the limits permitted by glazing material manufacturer or when joint substrates are wet due to rain, frost, condensation or other causes.

1. Install liquid sealants at ambient and substrate temperatures above 40 degrees F (4.4 deg. C).

1.8 WARRANTY

A. Manufacturer's Special Warranty for Coated-Glass Products: Manufacturer's standard form, made out to Owner and signed by coated-glass manufacturer agreeing to replace coated-glass units that deteriorate as defined in "Definitions" Article, f.o.b. the nearest shipping point to Project site, within specified warranty period indicated below.

1. Warranty Period: Manufacturer's standard but not less than 10 years after date of substantial completion.

B. Manufacturer's Special Warranty on Insulating Glass: Manufacturer's standard form, made out to Owner and signed by insulating-glass manufacturer agreeing to replace insulating-glass units that deteriorate as defined in "Definitions" Article, f.o.b. the nearest shipping point to Project site, within specified warranty period indicated below.

1. Warranty Period: Manufacturer's standard but not less than 10 years after date of substantial completion.

DELETE WARRANTY REQUIREMENT BELOW IF NO LAMINATED GLASS INCLUDED.

C. Manufacturer's Special Warranty on Laminated Glass: Manufacturer's standard form, made out to Owner and signed by manufacturer agreeing to replace units that deteriorate as defined in "Definitions" Article, f.o.b. the nearest shipping point to Project site, within specified warranty period indicated below.

1. Warranty Period: Five years from date of Substantial Completion.

PART 2 - PRODUCTS

2.1 MANUFACTURERS

A. Subject to compliance with requirements, provide products by one of the following manufacturers:

ALWAYS INCLUDE PRIMARY GLASS PARAGRAPH BELOW, SINCE PRIMARY GLASS IS A COMPONENT OF INSULATING GLASS AND LAMINATED GLASS.

B. Primary Glass:

1. AGC Flat Glass North America, Inc.
2. Guardian Industries Corp.
3. Pilkington North America, Inc.
4. PPG Industries, Inc.

DELETE PATTERNED GLASS IF NONE IN PROJECT.

C. Patterned Glass:

1. AGC Flat Glass North America.
2. Guardian Industries Corp.

D. Laminated Glass:

1. AGC Flat Glass North America.
2. Guardian Industries Corp.
3. Oldcastle Glass Group.
4. Viracon, Inc.

E. Insulating Glass Units:

EDIT LIST AFTER SELECTING DESIRED CHARACTERISTICS OF INSULATING GLASS UNITS.

1. AGC Flat Glass North America.
2. Guardian Industries Corp.
3. Oldcastle Glass Group
4. Viracon, Inc.

F. Glazing sealants:

1. Dow Corning Corp.
2. GE
3. Pecora Corp.
4. Tremco, Inc.

REFER TO DELEGATED DESIGN REQUIREMENTS IN THE "ALUMINUM WINDOWS" AND "GLAZED ALUMINUM CURTAIN WALL" SECTIONS.

2.2 PERFORMANCE REQUIREMENTS

A. General: Provide glazing systems capable of withstanding normal thermal movement and wind and impact loads (where applicable) without failure, including loss or glass breakage attributable to the following: defective manufacture, fabrication, and installation; failure of sealants or gaskets to remain watertight and airtight; deterioration of glazing materials; or other defects in construction.

FIRST PARAGRAPH AND SUBPARAGRAPHS BELOW ASSUME GLASS THICKNESSES ARE INDICATED ON DRAWINGS OR IN ARTICLE 2.5. IF NOT, REVISE ACCORDINGLY. STRUCTURAL ENGINEER SHALL PERFORM A WIND PRESSURE ANALYSIS PER THE MICHIGAN BUILDING CODE.

B. Glass Design: Glass thickness designations indicated are minimums and are for detailing only. Confirm glass thicknesses and strengths (annealed or heat treated) by analyzing Project loads and in-service conditions as required to meet or exceed the following criteria:

1. Glass Thicknesses: Comply with ASTM E 1300, according to the following requirements:
   a. Design Wind Loads: As indicated on Drawings.
2. Normal thermal movement is defined as that resulting from an ambient temperature range of 120 deg. F (67 deg. C) and from a consequent temperature range within glass and glass framing members of 180 deg. F (100 deg. C).

2.3 PRIMARY GLASS PRODUCTS

A. General: Refer to ["Aluminum Entrances and Storefront"] ["Aluminum Windows"] ["Glazed Aluminum Curtain Wall"] section for performance requirements of assembled units composed of insulating units and aluminum framing.

B. Clear Annealed Float Glass: ASTM C 1036 Type I (transparent glass, flat), Quality q3 (glazing select), of class indicated and with the following characteristics:

ENTER VALUES FOR VISIBLE LIGHT TRANSMITTANCE AND REFLECTANCE BELOW AFTER REVIEWING PROJECT REQUIREMENTS. DELETE BELOW IF COVERED UNDER INSULATED GLASS SECTION IN PART 2.

1. Visible Light Transmittance: [ ]
2. Reflectance: [ ]

DELETE BELOW UNLESS PROJECT IS A RETROFIT MATCHING EXISING TINTED GLAZING. TINTED GLASS IS NOT ACCEPTABLE ON NEW CONSTRUCTION.

C. Tinted Float Glass: Type I (transparent glass, flat), Class 2 (tinted heat absorbing and light reducing), Quality q3 (glazing select) and as follows:

BELOW IS A GENERAL DESCRIPTION FOR TINTED BRONZE GLASS. OBTAIN SAMPLES AND MATCH TO EXISTING GLAZING AS CLOSELY AS POSSIBLE. CONSIDER LIMITING ACCEPTABLE PRODUCTS IF NOT ALL MANUFACTURERS HAVE A CLOSE MATCH.

1. Bronze: Tint matching existing units.

D. Heat-Treated Float Glass

1. Manufacturing Process: Manufacture heat-treated glass by horizontal (roller hearth) process with roll-wave distortion parallel to bottom edge of glass as installed, unless otherwise indicated.

BELOW SPECIFIES BOTH COATED AND UNCOATED CLEAR STRENGTHENED OR TEMPERED GLASS.

PROVIDE KIND HS (HEAT-STRENGTHENED) FLOAT GLASS IN PLACE OF ANNEALED FLOAT GLASS WHERE NEEDED TO RESIST THERMAL STRESSES INDUCED BY DIFFERENTIAL SHADING OF INDIVIDUAL GLASS LITES AND TO COMPLY WITH GLASS DESIGN REQUIREMENTS SPECIFIED IN PART 1 "PERFORMANCE REQUIREMENTS" ARTICLE.

2. Clear Heat-Treated Float Glass: ASTM C 1048 Type I (transparent glass, flat), Class 1 (clear), Quality q3 (glazing select),and with the following characteristics:

SELECT ONE OR BOTH BELOW

a. For uncoated glass, comply with requirements for Condition A.
b. For coated vision glass, comply with requirements for Condition C (other coated glass).

DELETE SUBPARAGRAPH BELOW IF LOCATIONS OF KIND FT FLOAT GLASS FOR SAFETY GLASS APPLICATIONS ARE SPECIFIED IN OTHER PART 2 ARTICLES OR ON DRAWINGS.

c. Provide Kind FT (fully tempered) float glass in place of annealed or Kind HS (heat-strengthened) where safety glass is indicated, required by Code or performance requirements listed elsewhere in this Section.

BELOW SPECIFIES TINTED HEAT-STRENGTHENED OR TEMPERED GLASS. PROVIDE KIND HS (HEAT-STRENGTHENED) FLOAT GLASS WHERE NEEDED TO RESIST THERMAL STRESSES INDUCED BY DIFFERENTIAL SHADING OF INDIVIDUAL GLASS LITES AND TO COMPLY WITH GLASS DESIGN REQUIREMENTS SPECIFIED IN PART 1 "PERFORMANCE REQUIREMENTS" ARTICLE. USE OF TINTED GLASS IS RESTRICTED TO REPLACEMENT OR MATCHING OF EXISTING TINTED UNITS.

3. Tinted Heat-Treated Float Glass: ASTM C 1048; Type I(transparent glass, flat); Class 2 (tinted heat absorbing and light reducing), Quality q3 (glazing select), with tint color and performance characteristics for 1/4 inch thick glass matching those indicated for non-heat-treated float glass; kind as indicated:

a. For uncoated glass, comply with requirements for Condition A.
b. For coated vision glass, comply with requirements for Condition C (other uncoated glass).

DELETE SUBPARAGRAPH BELOW IF LOCATIONS OF KIND FT FLOAT GLASS FOR SAFETY GLASS APPLICATIONS ARE SPECIFIED IN OTHER PART 2 ARTICLES OR ON DRAWINGS.

c. Provide Kind FT (fully tempered) float glass in place of Kind HS (heat-strengthened) where safety glass is indicated.

DELETE BELOW IF NO PATTERNED GLASS REQUIRED. IF USING IN NON-OPAQUE SPANDREL PANEL ALWAYS SPECIFY HEAT STRENGTHENED GLASS.

E. Patterned Glass: ASTM C 1048 Type II (patterned and wired glass, flat), Form 3 (patterned), Quality q8 (glazing), Finish f1 (patterned one side), of pattern and class indicated below:

BELOW IS THE ONLY PATTERNED GLASS WITH AN OVERALL OBSCURING PATTERN AVAILABLE AS OF AUGUST, 2011, IN ONE QUARTER-INCH THICKNESS. OTHER PATTERNS ARE AVAILABLE IN 3/16" THICKNESS FROM AGC AND GUARDIAN.

1. Pattern p3 (random), Class 1 (translucent).
   a. Product: Subject to compliance with requirements, provide "Serenity" by AGC Flat Glass North America.

RETAIN THICKNESS HERE OR ON DRAWINGS.

2. Thickness: 1/4-inch.

BELOW SPECIFIES STANDARD OPAQUE SPANDREL COATED GLASS WITH A CERAMIC FRIT APPLIED TO THE INBOARD SURFACE OF THE LITE. DELETE IF NONE IS INCLUDED IN PROJECT. COORDINATE WITH DESIGN MANAGER BEFORE USE.

F. Ceramic Coated Heat-Treated Spandrel Glass: ASTM C 1048 Condition B (spandrel coated glass, one surface ceramic coated), Type I (transparent glass, flat), Quality q3 (glazing select), and complying with the following requirements:

1. Kind HS (heat strengthened).

ALTHOUGH IT IS POSSIBLE FOR UNBACKED HEAT-STRENGTHENED SPANDREL COATED GLASS TO PASS TEST IN SUBPARAGRAPH BELOW, APPLYING TAPE TO BACK OF SPANDREL COATED GLASS IS NORMALLY REQUIRED.

2. Fallout Resistance: Provide spandrel coated units identical to those passing the fallout-resistance test for spandrel coated glass specified in ASTM C 1048.

G. Low-E Glazing General: Performance characteristics designated for coated glass products are nominal values based on manufacturer's published test data for 1/4 inch thick glass products, unless otherwise indicated. Refer to primary and heat-treated glass product requirements relating to properties of glass products to which coatings are applied.

1. Provide heat-treated coated float glass of kind and where indicated or, if not otherwise indicated, provide heat-strengthened units where recommended by manufacturer for application indicated, and tempered where coated safety glass is designated or required.

H. Sputter-Coated Float Glass: ASTM C 1376, (except for provisions regarding color tolerances, which are modified in this Section) float glass with metallic-oxide or -nitride coating deposited by vacuum deposition process after manufacture and heat treatment (if any), and complying with other requirements specified.

DELETE THE FOLLOWING ARTICLE IF NO LAMINATED SAFETY GLASS REQUIRED.

2.4 LAMINATED GLASS PRODUCTS

A. General: Refer to float glass, heat-treated glass and coated glass requirements relating to properties of glasses making up laminated glass products.

B. Laminated Glass: ASTM C 1172, and complying with other requirements specified and with the following:

1. Interlayer: Polyvinyl butyral of thickness indicated with a proven record of no tendency to bubble, discolor, or lose physical and mechanical properties after laminating glass lites and installation.
2. Products: Subject to compliance with requirements, provide one of the following:
   Saflex; Solutia, Inc.
   Butacite; E.I. DuPont De Nemours and Co., Inc.

C. Laminating Process: Fabricate laminated glass using laminator's standard heat-plus-pressure process to produce glass free from foreign substances and air/glass pockets.

D. Laminated Safety Glass: Two panes of glass of equal thickness, laminated together with not less than [0.030] [0.060] inch thick plastic interlayer and complying with requirements indicated below:

1. Glass Characteristics: Float glass, complying with requirements for class, tint, kind and thickness of each pane (ply) indicated below:
   a. Class 1 - clear for both panes.

SELECT ONE OF TWO BELOW.

   b. Kind HS (heat-strengthened).
   c. Kind FT (Fully tempered).
   d. Thickness: 1/4 inch.
2. Color of Plastic Interlayer: Clear.

COORDINATE REQUIREMENTS SELECTED IN THIS ARTICLE WITH THOSE IN OTHER ARTICLES ON GLASS PRODUCTS WHICH RELATE TO PANES MAKING UP INSULATING UNITS.

2.5 SEALED INSULATING GLASS UNITS

A. General: Provide factory-assembled units consisting of sealed lites of glass separated by a dehydrated interspace filled with argon gas, and with other requirements specified for glass characteristics, air space, sealing system, sealant, spacer material, corner design and desiccant. Provide insulating glass units complying with and labeled with appropriate certification label of IGCC/IGMA Certification Program.

1. For properties of individual glass panes making up units, refer to product requirements specified elsewhere in this Section applicable to types, classes, kinds and conditions of glass products indicated.

INDICATE LOCATIONS OF HEAT-STRENGTHENED UNITS ON DRAWINGS OR SCHEDULES.

2. Provide Kind HS (heat-strengthened) glass where indicated, or if not indicated, where needed to resist thermal stresses induced by differential shading of individual glass lites and to comply with glass design requirements specified elsewhere in Section.
3. Provide tempered panes where indicated or if not indicated, where safety glass is designated or required.
4. Performance characteristics designated for coated insulating glass are nominal values based on manufacturer's published test data for units with 1/4 inch thick panes of glass and 1/2 inch thick air space filled with argon gas.
5. Sealing System: Dual seal, using butyl primary seal and silicone secondary seal.

BELOW IS SPECIFICATION FOR STANDARD ALUMINUM SPACER. BETTER THERMAL PERFORMANCE CAN BE OBTAINED BY USING "WARM EDGE" SPACERS OF STAINLESS STEEL OR OTHER MATERIALS.

6. Spacer: Fabricated from anodized aluminum, incorporating either molecular sieve, silica gel or combination type dessicant as standard with manufacturer.

SELECT ONE OF THE FOLLOWING.

a. Color: Clear.
b. Color: Match finish color of aluminum framing system.
c. Color: Dark bronze.

SELECT SEALANT SYTEM WITH BEST PERFORMANCE AND WHICH IS ACCEPTABLE TO ALUMINUM FRAMING MANUFACTURERS.

2.6 SEALANT SYSTEMS GENERAL

A. Products:

1. Provide products of material, size, and shape complying with referenced glazing standard, requirements of manufacturers of glass and other glazing materials for application indicated, and with a proven record of compatibility with surfaces contacted in installation.

ALWAYS RETAIN BELOW. IF PROJECT IS LEED, VERIFY VALUE BELOW FOR LEED CREDIT.

2. Sealants used inside the framing and glazing shall have a VOC content of 250 g/L or less when calculated according to 40 CFR 59, Subpart D (EPA Method 24).

B. Cleaners, Primers and Sealers: Type recommended by manufacturer of sealants.

C. Setting Blocks: Elastomeric material with 80 to 90 Shore, type A durometer hardness.

D. Spacers: Elastomeric blocks or continuous extrusions with a Shore, Type A durometer hardness required by glass manufacturer to maintain glass lites in place for installation indicated.

E. Edge Blocks: Elastomeric material as required for compatibility with glazing sealant, of size and hardness required to limit lateral movement (side-walking) of glass.

WET-DRY SYSTEM USES A TOOLED SEALANT CAP BEAD OVER A GLAZING GASKET ON THE EXTERIOR AND A DRY GASKET ON THE INTERIOR. THIS SYSTEM PROVIDES BETTER WEATHER PROTECTION BUT REQUIRES THAT GLAZING BE DONE FROM THE EXTERIOR. ADDITIONALLY, NOT ALL ALUMINUM FRAMING MANUFACTURERS PRODUCE A FRAMING SYSTEM THAT ACCEPTS WET-DRY GLAZING.

2.7 WET-DRY GLAZING SEALANT SYSTEM MATERIALS

A. Glazing Gaskets: Manufacturer's standard compression types; replaceable, molded or extruded, of profile and hardness required to maintain watertight seal on interior.

BOND-BREAKER TAPE IS TYPICALLY USED WITH WEATHERSEAL SEALANTS IF CONVENTIONAL SEALANT BACKING CANNOT BE USED BECAUSE OF DIMENSIONAL LIMITATIONS. IT IS ALSO USED TO AVOID THREE-SIDE ADHESION THAT MAY BE DETRIMENTAL TO PROPER SEALANT MOVEMENT.

B. Bond-Breaker Tape: Manufacturer's standard TFE-fluorocarbon or polyethylene material to which sealants will not develop adhesion.

RETAIN PARAGRAPH BELOW IF USING TAPE INSTEAD OF GASKET.

C. Glazing Tapes: Preformed, butyl-based, 100 percent solids elastomeric tape; nonstaining and nonmigrating in contact with nonporous surfaces; with or without spacer rod as recommended in writing by tape and glass manufacturers for application indicated; and complying with ASTM C 1281 and AAMA 800 for products indicated below:

1. AAMA 806.3 tape, for glazing applications in which tape is subject to continuous pressure.

D. Glazing Sealants: As recommended by manufacturer for joint type, and as follows:

REVIEW WEATHERSEAL-SEALANT REQUIREMENTS WITH ALUMINUM-FRAMED-SYSTEM MANUFACTURERS. BELOW IS NEUTRAL CURE. CONFIRM WITH MANUFACTURER OF SPECIFIED FRAMING SYSTEM.

1. Silicone Weatherseal Sealant: ASTM C 920 for Type S, Grade NS, Class 50, Uses NT, G, A, and O; single-component neutral-curing formulation that is compatible with structural sealant and other system components with which it comes in contact; recommended by structural-sealant, weatherseal-sealant, and aluminum-framed-system manufacturers for this use.

2.8 DRY GASKET SYSTEM MATERIALS

A. Dense Compression Gaskets: Molded or extruded gaskets of profile and hardness required to maintain watertight seal, made from one of the following:

RETAIN ONE OR BOTH OF SUBPARAGRAPHS BELOW. USE COMPONENTS COMPLYING WITH WINDOW, STOREFRONT, CURTAIN WALL AND DOOR MANUFACTURER'S REQUIREMENTS. NEOPRENE IS NOT COMPATIBLE WITH SILICONE GLAZING SEALANTS.

1. EPDM complying with ASTM C 864.

2. Silicone complying with ASTM C 1115.

GASKETS IN FIRST PARAGRAPH BELOW ARE FOR USE BETWEEN GLASS AND FRAME (OR FIXED STOP) WHERE THEY WILL BE COMPRESSED BY INSERTING DENSE COMPRESSION GASKETS OR BY PRESSURE-GLAZING STOPS.

B. Soft Compression Gaskets: Extruded or molded, closed-cell, EPDM or silicone gaskets complying with ASTM C 509, Type II, black; of profile and hardness required to maintain watertight seal.

1. Application: Use where soft compression gaskets will be compressed by inserting dense compression gaskets on opposite side of glazing or pressure applied by means of pressure-glazing stops on opposite side of glazing.

2.9 FABRICATION OF GLAZING UNITS

A. Fabricate glazing units in sizes required to glaze openings indicated for Project, with edge and face clearances, edge and surface conditions, and bite complying with written instructions of product manufacturer and referenced glazing publications, to comply with system performance requirements.

2.10 INSULATED-GLASS TYPES

PARAGRAPH AND SUBPARAGRAPHS BELOW DESCRIBE TYPICAL U-M INSULATED GLAZING PANEL.

A. Clear Low-E Insulating Glass Units for Vertical Applications: Manufacturer's standard units complying with the following requirements:

1. Thickness of Each Pane: 1/4-inch.

SELECT TYPE OF GLASS FOR EACH PANE.

2. Exterior Pane: [Clear float glass] [Heat strengthened float glass] [Fully tempered float glass], low-emissivity coating applied to the second surface.
3. Interior Pane: [Clear float glass] [Heat strengthened float glass] [Fully tempered float glass], uncoated.
4. Air Space Thickness: 1/2-inch.
   a. Fill air space with argon gas.
5. Composite Thickness: 1-inch.
6. Performance Characteristics: Provide insulating glass units complying with ASTM E 774 for Class A, and the following:

MODIFY AS REQUIRED TO MEET PROJECT REQUIREMENTS.

   a. Visible light transmittance: Not more than 70 percent.
   b. UV Transmittance: 15 percent.
   c. Outdoor reflectance: Not more than 12 percent.

NORMALLY, SPECIFY U-VALUE AND SHGC IN THE ACCOMPANYING ALUMINUM FRAMING SECTION (STOREFRONT, WINDOWS OR CURTAIN WALL).

d. U-value and Solar Heat Gain Coefficient: As required to achieve specified performance in ["Aluminum Entrances and Storefront"] ["Aluminum Windows"] ["Glazed Aluminum Curtain Wall"] Section[s].

USUALLY DELETE PARAGRAPH AND SUBPARAGRAPHS BELOW. RETAIN ONLY FOR PROJECTS MATCHING EXISTING TINTED GLASS.

B. Tinted Low-E Insulating Glass Units for Vertical Applications: Manufacturer's standard units complying with the following requirements:

REVISE BELOW AS REQUIRED TO MATCH COLOR OF EXISTING GLAZING.

1. Thickness of Each Pane: 1/4-inch.

SELECT TYPE OF GLASS FOR EACH PANE. TYPICALLY USE HEAT STRENGTHENED GLASS WHEN GLASS IS TINTED, ESPECIALLY ON SOUTH AND WEST ELEVATIONS.

2. Exterior Pane: [Clear float glass] [Heat strengthened float glass] [Fully tempered float glass], low-emissivity coating applied to the second surface.
   a. Tint: Bronze.
3. Interior Pane: [Clear float glass] [Heat strengthened float glass] [Fully tempered float glass], uncoated.
4. Air Space Thickness: 1/2-inch.
   a. Fill air space with argon gas.
5. Composite Thickness: 1-inch.
6. Performance Characteristics: Provide insulating glass units complying with ASTM E 774 for Class A, and the following:

MODIFY AS REQUIRED TO MEET PROJECT REQUIREMENTS.

   a. Visible light transmittance: []
   b. UV Transmittance: Not more than 5 percent.
   c. Outdoor reflectance: []

NORMALLY, SPECIFY U-VALUE AND SHGC IN THE ACCOMPANYING ALUMINUM FRAMING SECTION (STOREFRONT, WINDOWS OR CURTAIN WALL).

   d. U-value and Solar Heat Gain Coefficient: As required to achieve specified performance in ["Aluminum-Framed Entrances and Storefronts"] ["Aluminum Windows"] ["Glazed Aluminum Curtain Wall"] Section[s].

BELOW DESCRIBES SEMI-OPAQUE "TRANSOM PANEL" USED TO CONCEAL CEILING SPACES. IT IS A REASONABLY CLOSE MATCH TO VISION PANELS. DELETE IF STANDARD OPAQUE SPANDREL COATED GLASS IS SELECTED, OR IF NO SPANDREL COATED GLASS IS REQUIRED.

C. Non-Vision Low-E Insulating Glass Units for Vertical Applications: Manufacturer's standard units complying with the following requirements:

1. Thickness of Each Pane: 1/4-inch.

SELECT TINTED OR CLEAR GLAZING TO MATCH VISION UNITS. IF USING CLEAR GLASS DELETE THE FOLLOWING PARAGRAPH AND ASSOCIATED SUB-PARAGRAPHS.

TYPICALLY USE HEAT STRENGTHENED GLASS WHEN GLASS IS TINTED, ESPECIALLY ON SOUTH AND WEST ELEVATIONS.

a. Exterior Pane: [Tinted] [Clear] [float glass] [heat strengthened float glass] [fully tempered float glass], low-emissivity coating applied to the second surface.

REVISE TO MATCH EXISTING TINT COLOR OR ELIMINATE FOR CLEAR GLASS.

1) Tint: Bronze.

b. Interior Pane: Spandrel coated glass.
   1) Kind HS (heat strengthened), unless otherwise indicated.

c. Air Space Thickness: 1/2-inch.
   1) Fill air space with argon gas.

d. Composite Thickness: 1-inch.

PART 3 - EXECUTION

3.1 EXAMINATION

A. Inspection: Inspect work of glass framing erector in presence of Glazier for compliance with manufacturing and installation tolerances, including those for size, squareness, offsets at corners; for presence and functioning of weep system; for existence of minimum required face or edge clearances; and for effective sealing of joinery.

1. Obtain Glazier's written report listing conditions detrimental to performance of glazing work. Do not allow glazing work to proceed until unsatisfactory conditions have been corrected.

3.2 PREPARATION

A. Clean glazing channels and other framing members to receive glass, immediately before glazing. Remove coatings which are not firmly bonded to substrates. Remove lacquer from metal surface where elastomeric sealants are indicated for use.

3.3 GLAZING GENERAL

IF IT IS ASSUMED THAT SHOP GLAZING WILL BE IMPOSSIBLE IN SOME LOCATIONS, INDICATE ACCEPTABLE FIELD GLAZED LOCATIONS ON DRAWING.

A. Unless indicated otherwise, shop glaze aluminum framing specified in “Aluminum-Framed Entrances and Storefronts”, “Aluminum Windows" and “Glazed Aluminum Curtain Wall” Sections.

B. Comply with combined written instructions of manufacturers of aluminum framing, glass, sealants, tapes, and other glazing materials, except where more stringent requirements are indicated, including those of referenced glazing publications.

C. Protect glass from edge damage during handling and installation. Remove from Project and legally dispose of damaged glass. Damaged glass is glass with edge damage or other imperfections that, when installed, could weaken glass and impair performance and appearance.

D. Glazing channel dimensions, as indicated on Drawings, provide necessary bite on glass, minimum edge and face clearances, and adequate sealant thicknesses, with reasonable tolerances. Adjust as required by Project conditions during installation.

E. Do not exceed edge pressures stipulated by glass manufacturers for installing glass lites.

F. Apply primers to joint surfaces where required for adhesion of sealants, as determined by preconstruction sealant-substrate testing.

G. Install setting blocks in sill rabbets, sized and located to comply with referenced glazing publications, unless otherwise required by glass manufacturer. Set blocks in thin course of sealant which is acceptable for heel bead use.

H. Provide spacers for glass sizes larger than 50 united inches (length plus height).

1. Locate spacers directly opposite each other on both inside and outside faces of glass. Install correct size and spacing to preserve required face clearances, unless gaskets and glazing tapes are used that have demonstrated ability to maintain required face clearances and to comply with system performance requirements.
2. Provide 1/8-inch (3-mm) minimum bite of spacers on glass and use thickness equal to sealant width. With glazing tape, use thickness slightly less than final compressed thickness of tape.

I. Provide edge blocking where indicated or needed to prevent glass lites from moving sideways in glazing channel, as recommended in writing by glass unit manufacturer and according to requirements in referenced glazing publications.

J. Set units of glass in each series with uniformity of pattern, draw, bow and similar characteristics.

K. Set glass lites with proper orientation so that coatings face exterior or interior as specified.

L. Install sealants in compliance with ASTM C1193.

COORDINATE GLAZING METHODS BELOW WITH SELECTIONS IN PART 2.

3.4 WET/DRY GLAZING

A. Follow manufacturer's recommendations and reference standards.

B. Cut compression gaskets to lengths recommended by gasket manufacturer to fit openings exactly, with allowance for stretch during installation.

C. Insert soft compression gasket between glass and frame or fixed stop so it is securely in place with joints miter cut and bonded together at corners.

RETAIN BELOW FOR WINDOWS AND STOREFRONT SYSTEMS.

D. Installation with Drive-in Wedge Gaskets: Center glass lites in openings on setting blocks and press firmly against soft compression gasket by inserting dense compression gaskets formed and installed to lock in place against faces of removable stops. Start gasket applications at corners and work toward centers of openings. Compress gaskets to produce a weathertight seal without developing bending stresses in glass. Seal gasket joints with sealant recommended by gasket manufacturer. Apply cap bead of sealant on exterior per manufacturer's instructions.

RETAIN BELOW FOR CURTAIN WALL

E. Installation with Pressure-Glazing Stops: Center glass lites in openings on setting blocks and press firmly against soft compression gasket. Install dense compression gaskets and pressure-glazing stops, applying pressure uniformly to compression gaskets. Compress gaskets to produce a weathertight seal without developing bending stresses in glass. Seal gasket joints with sealant recommended by gasket manufacturer. Apply cap bead of sealant on exterior per manufacturer's instructions.

3.5 TAPE GLAZING

A. Position tapes on fixed stops so that, when compressed by glass, their exposed edges are flush with or protrude slightly above sightline of stops.

B. Install tapes continuously, but not necessarily in one continuous length. Do not stretch tapes to make them fit opening.

C. Cover vertical framing joints by applying tapes to heads and sills first and then to jambs. Cover horizontal framing joints by applying tapes to jambs and then to heads and sills.

D. Place joints in tapes at corners of opening with adjoining lengths butted together, not lapped. Seal joints in tapes with compatible sealant approved by tape manufacturer.

E. Do not remove release paper from tape until right before each glazing unit is installed.

DELETE PARAGRAPH BELOW IF NOT REQUIRED, OR QUALIFY BY ADDING "WHERE INDICATED" AND SHOW LOCATIONS ON DRAWINGS.

F. Apply heel bead of elastomeric sealant.

G. Center glass lites in openings on setting blocks and press firmly against tape by inserting dense compression gaskets formed and installed to lock in place against faces of removable stops. Start gasket applications at corners and work toward centers of openings.

DELETE PARAGRAPH BELOW IF NOT APPLICABLE OR REVISE; IT ASSUMES FIXED STOP IS LOCATED ON EXTERIOR.

H. Apply cap bead of elastomeric sealant over exposed edge of tape.

RETAIN BELOW FOR DRY GLAZING WITH GASKETS.

3.6 GASKET GLAZING (DRY):

A. Fabricate compression gaskets in lengths recommended by gasket manufacturer to fit openings exactly, with allowance for stretch during installation.

B. Insert soft compression gasket between glass and frame or fixed stop so it is securely in place with joints miter cut and bonded together at corners.

C. Center glass lites in openings on setting blocks and press firmly against soft compression gasket by inserting dense compression gaskets formed and installed to lock in place against faces of removable stops. Start gasket applications at corners and work toward centers of openings. Miter cut wedge-shaped gaskets at corners, and install gaskets in manner recommended by gasket manufacturer to prevent pull away at corners. Compress gaskets to produce a weathertight seal without developing bending stresses in glass. Seal gasket joints with sealant recommended by gasket manufacturer.

D. Install gaskets so they protrude past face of glazing stops.

3.7 SEALANT GLAZING (WET)

A. Install continuous spacers, or spacers combined with cylindrical sealant backing, between glass lites and glazing stops to maintain glass face clearances and to prevent sealant from extruding into glass channel and blocking weep systems until sealants cure. Secure spacers or spacers and backings in place and in position to control depth of installed sealant relative to edge clearance for optimum sealant performance.

B. Force sealants into glazing channels to eliminate voids and to ensure complete wetting or bond of sealant to glass and channel surfaces.

1. Tool exposed surfaces of sealants to provide a substantial wash away from glass.

3.8 ADJUSTING, CLEANING, PROTECTION

A. Protect exterior glass from breakage immediately upon installation by use of crossed streamers attached to framing and held away from glass. Do not apply markers to surface of glass. Remove nonpermanent label and clean surfaces.

B. Protect glass from contact with contaminating substances resulting from construction operations. If, despite such protection, containment substances do come into contact with glass, remove immediately by method recommended by glass manufacturer.

C. Examine glass surfaces adjacent to or below exterior concrete and other masonry surfaces at frequent intervals during construction, but not less than once a month, for buildup of dirt, scum, alkali deposits or staining. When examination reveals presence of these forms of residue, remove by method recommended by glass manufacturer.

D. Remove and replace glass which is broken, chipped, cracked, abraded or damaged in other ways during construction period, including natural causes, accidents and vandalism.

E. Wash glass on both faces not more than 4 days prior to date scheduled for inspections intended to establish date of substantial completion in each are of project. Wash glass by method recommended by glass manufacturer.

END OF SECTION 088000

UNIVERSITY OF MICHIGAN
ARCHITECTURE, ENGINEERING AND CONSTRUCTION

ARCHITECTURE & ENGINEERING
326 East Hoover, Mail Stop B
Ann Arbor, MI 48109-1002
Phone: 734-764-3414
Fax: 734-936-3334

BuildingName
The Description of the Project
P00000000 0000

SPECIFICATION DIVISION 8

NUMBER SECTION DESCRIPTION

DIVISION 08 OPENINGS
SECTION 088010 - GLAZING (INTERIOR APPLICATIONS)

END OF CONTENTS TABLE

DIVISION 08 OPENINGS
SECTION 088010 - GLAZING (INTERIOR APPLICATIONS)

UPDATED TO CORRELATE WITH LANGUAGE IN SECTION 088000 AND MANUFACTURERS UPDATED - 5/05.

UPDATED TO INCLUDE FIRE-RATED GLAZING PRODUCTS - 5/04.

THIS SECTION HAS BEEN PRE-EDITED TO APPLY ONLY TO SMALL INTERIOR PROJECTS. USE MASTER SPECIFICATION SECTION 088000 "GLAZING") FOR EXTERIOR GLASS.

RATHER THAN USING THIS SECTION, CONSIDER INCLUDING VERY SMALL, NON-COMPLEX GLASS ITEMS IN RELATED SECTIONS. EXAMPLE: GLASS LITES IN DOORS IN STEEL OR WOOD DOOR SECTIONS; GLASS LIGHTS IN SIDELITES IN STEEL FRAME OR FINISH CARPENTRY SECTION. HOWEVER, IF INCLUDING THIS SECTION FOR ANY APPLICATION, INCLUDE ALL GLAZING APPLICATIONS WITHIN IT.

PART 1 - GENERAL

1.1 SUMMARY

A. Extent of glass and glazing work is indicated on drawings.

1.2 SUBMITTALS

A. Product Data: Submit manufacturer's technical data for each glazing material and fabricated glass product required, including installation and maintenance instructions.

B. Certificate: Submit certificates from respective manufacturers attesting that glass and glazing materials furnished for project comply with requirements.

1.3 DEFINITIONS

A. Deterioration of Laminated Glass and Gel-Filled Dual-Glazed Units: Defects developed from normal use that are attributed to the manufacturing process and not to causes other than glass breakage and practices for maintaining and cleaning glass units contrary to manufacturer's written instructions. Defects include edge separation, delamination materially obstructing vision through glass, and blemishes exceeding those allowed by referenced laminated-glass standard.

1.4 QUALITY ASSURANCE

A. Glazing Publications: Comply with published recommendations of glass product manufacturers and organizations below, unless more stringent requirements are indicated.

1. GANA Publications:
   a. GANA's "Glazing Manual."

DELETE OPTION IN SUBPARAGRAPH BELOW IF NO LAMINATED GLASS IS SPECIFIED FOR PROJECT.

b. GANA Laminated Division's "Laminated Glass Design Guide" and

DELETE BELOW IF NO SAFETY GLAZING IS REQUIRED. COORDINATE WITH PART 2 ARTICLES SPECIFYING MONOLITHIC, INSULATING AND LAMINATED GLASS PRODUCTS.

B. Safety Glazing Standard: Comply with the following:

1. Provide safety glass where indicated and where otherwise required by the Michigan Building Code.

REVISE PARAGRAPH BELOW FROM CATEGORY II MATERIALS TO CATEGORY I MATERIALS IF GLASS PANES ARE STATIONARY OR IN SWINGING DOORS AND ARE LESS THAN 9 SF IN AREA. REFER TO HTTP://WWW.ACCESS.GPO.GOV/NARA/CFR/WAISIDX_03/16CFR1201_03.HTML FOR COMPLETE DESCRIPTION OF CATEGORY I AND CATEGORY II MATERIALS.

2. Where safety glass is indicated, provide type of products indicated which comply with ANSI Z97.1 and testing requirements of 16 CFR Part 1201 for category II materials.
   a. Subject to compliance with requirements, provide safety glass permanently marked with certification label of Safety Glazing Certification Council (SGCC) or other certification agency acceptable to Owner.

C. Fire Resistance Rated Wire Glass: Provide wire glass products that are identical to those tested per ASTM E 163 (UL 9) and are labeled and listed by Underwriters Laboratories (UL) or other testing and inspecting agency acceptable to Authorities Having Jursidiction.

D. Glazing for Fire-Rated Door Assemblies: Glazing for assemblies that comply with NFPA 80 and that are listed and labeled by UL or Intertek/Warnock Hersey, for fire-protection ratings indicated, based on testing according to NFPA 252.

RETAIN PARAGRAPH ABOVE FOR DOORS AND PARAGRAPH BELOW FOR WINDOWS IF WIRED GLASS OR ANOTHER FIRE-RESISTIVE GLAZING PRODUCT IS SPECIFIED IN PART 2.

E. Glazing for Fire-Rated Window Assemblies: Glazing for assemblies that comply with NFPA 80 and that are listed and labeled by UL or Intertek/Warnock Hersey, for fire ratings indicated, based on testing according to NFPA 257.

1.5 DELIVERY, STORAGE, AND HANDLING

A. Protect glass and glazing materials during delivery, storage, and handling to comply with manufacturer's directions. Prevent damage to glass and glazing materials.

DELETE THE WARRANTY BELOW UNLESS MULTI-LITE LAMINATED OR GEL-FILLED UNITS IN PART TWO ARE INCLUDED.

1.6 WARRANTY

A. Manufacturer's Special Warranty on Fire-Rated Laminated Glass and Gel-Filled, Dual-Glazed Units: Manufacturer's standard form, made out to Owner and signed by manufacturer agreeing to replace units that deteriorate as defined in "Definitions" Article, f.o.b. the nearest shipping point to Project site, within specified warranty period indicated below.

1. Warranty Period: Five years from date of Substantial Completion.

PART 2 - PRODUCTS

2.1 MANUFACTURERS

A. Manufacturers: Subject to compliance with requirements, provide products by one of the following:

SELECT APPROPRIATE APPLICATIONS BELOW.

B. Primary Glass:

AFG Industries.
Guardian Industries Corp.
Pilkington Group
PPG Industries, Inc.
Visteon.

C. Wire and Patterned Glass:

AFG Industries.
Guardian Industries.
Pilkington Group.

D. Laminated Glass:

AFG Industries.
Guardian Industries Corp.
Interpane Glass Company.
PPG Industries, Inc.
Oldcastle Glass Group.

E. Fire Rated Glazing:

EDIT LIST AFTER SELECTING TYPE OF FIRE-RATED GLAZING TO BE USED. NOT ALL TYPES OF PRODUCTS ARE MADE BY EACH OF THE MANUFACTURERS LISTED.

1. Glaverbel S.A.; distributed by Interedge Technologies.
2. Interedge Technologies.
3. R. Four Ltd.; distributed by Technical Glass Products.
4. Nippon Electric Glass Co., Ltd.; distributed by Technical Glass Products.
5. Pilkington Group; distributed by Technical Glass Products.
6. SAFTI; a Division of O'Keeffe's, Inc.
7. Vetrotech Saint Gobain North America.

2.2 GLASS PRODUCTS

SELECT FROM UNITS BELOW. REFER TO AIA MASTERSPEC FOR ADDITIONAL GLASS TYPES.

A. Clear Float Glass: ASTM C 1036 Type I (transparent glass, flat), Class 1 (clear), Quality q3 (glazing select).

B. Tinted Float Glass: ASTM C 1036 Type I (transparent glass, flat), Class 2 (tinted heat absorbing and light reducing), Quality q3 (glazing select) and as follows:

1. Gray: Manufacturer's standard tint.

WIRED GLASS IS NOT RECOGNIZED AS SAFETY GLAZING IN THE 2006 MBC, WHICH REQUIRES SAFETY GLAZING IN DOORS EXCEPT IN OPENINGS THROUGH WHICH A 3-INCH SPHERE IS UNABLE TO PASS.

USE OF WIRED GLASS IS ALSO LIMITED TO OPENINGS WITH A FIRE RATING OF 45 MIN. OR LESS.

THE USE OF WIRE GLASS IS NOT RECOMMENDED, PARTICULARLY IN ATHLETIC AND CHILD CARE FACILITIES.

C. Wired Glass: ASTM C 1036 Type II (patterned and wired glass, flat), Class 1 (clear), Quality q6; complying with ANSI Z97.1; 1/4 inch thick; of form and mesh pattern indicated below:

SELECT ONE BELOW.

1. Polished Wire Glass: Form 1 (wired, polished both sides), Mesh m1 (diamond).
2. Polished Wired Glass: Form 1 (wire, polished both sides) Mesh m2 (square).

D. Patterned Glass: ASTM C 1036 Type II (patterned and wired glass, flat), Form 3 (patterned), Quality q8 (glazing), Finish f1 (patterned one side), of thickness, pattern and class indicated below:

BELOW ARE TWO EXAMPLES. OTHER PATTERNS ARE AVAILABLE FROM MANUFACTURERS LISTED IN 2.1.D.

1. Pattern p2 (geometric): 1/4 inch thick; Class 1 (translucent).
   a. Manufacturer/Product: Subject to compliance with requirements, one of the following:
      "Burlap"; Hordis Brothers.
      "Flax"; AFG.
2. Pattern p3 (random): 1/4 inch thick; Class 1 (translucent).
   a. Manufacturer/Product: Subject to compliance with requirements, one of the following:
      "Industrex"; AFG.

THE FOLLOWING ARE SAFETY GLAZING MATERIALS.

E. Clear Tempered Float Glass: ASTM C 1048 Condition A (uncoated surfaces), Type I (transparent glass, flat), Class I (clear), Quality q3 (glazing select), Kind FT (fully tempered).

F. Laminated Safety Glass: ASTM C 1172, two panes of glass of equal thickness, laminated together with interlayer, and complying with requirements indicated below:

1. Thickness: Nominal 1/4 inch.
2. Glass Characteristics: Float glass, Class 1 and clear for both panes; 1/8 inch thick for both panes.
3. Interlayer: Clear PVB plastic, not less than 0.030 inches thick, unless specified otherwise in this Section.

2.3 FIRE-RATED GLAZING ASSEMBLIES

IF RETAINING ONE OR MORE PRODUCTS IN THIS ARTICLE, ALSO RETAIN APPLICABLE "GLAZING FOR FIRE-RATED DOOR ASSEMBLIES" OR "GLAZING FOR FIRE-RATED WINDOW ASSEMBLIES" PARAGRAPHS IN PART 1 "QUALITY ASSURANCE" ARTICLE.

NOTE THAT ALL OF THE PRODUCTS LISTED BELOW ARE REQUIRED TO BE INSTALLED AS PART OF AN APPROVED ASSEMBLY, AND THAT THE ASSEMBLY IS TESTED AS A UNIT.

A. General: Products described in this article consist of tested assemblies containing both glazing material and manufacturer's approved framing systems.

PRODUCTS DESCRIBED IN FIRST PARAGRAPH AND ASSOCIATED SUBPARAGRAPHS BELOW DO NOT QUALIFY AS SAFETY GLAZING.

B. Assemblies Containing Monolithic Ceramic Glazing Material: Proprietary product in the form of clear flat sheets of 3/16-inch nominal thickness weighing 2.5 lb/sq. ft., and as follows:

MODIFY SPECIFIED FIRE RATING AS REQUIRED FOR PROJECT. PRODUCTS LISTED BELOW CAN HAVE UP TO A 90-MINUTE RATING.

1. Fire-Protection Rating: 45 minutes, and permanently labeled by UL or Intertek/Warnock Hersey.
2. Product: Subject to compliance with requirements, provide one of the following:

DO NOT SELECT "PREMIUM FIRELITE" UNLESS APPEARANCE IS VERY IMPORTANT. PREMIUM IS CONSIDERABLY MORE EXPENSIVE THAN STANDARD, BUT PROVIDES BETTER OPTICAL CLARITY AND CLEARER COLOR.

   a. "Premium FireLite" (polished on both surfaces) by Nippon Electric Glass Co., Ltd., and distributed by Technical Glass Products.
   b. "Standard FireLite" (unpolished on both surfaces) by Nippon Electric Glass Co., Ltd., and distributed by Technical Glass Products.
   c. SGG Keralite FR-R (unpolished on both surfaces) by Vetrotech Saint Gobain North America.

PRODUCTS DESCRIBED IN PARAGRAPH AND ASSOCIATED SUBPARAGRAPHS BELOW DO QUALIFY AS SAFETY GLAZING.

FOR APPLICATIONS WHERE OPTICAL CLARITY IS EXTREMELY IMPORTANT, CHANGE "UNPOLISHED" TO "POLISHED" IN PARAGRAPH BELOW AND

DELETE KERALITE, WHICH IS ONLY AVAILABLE UNPOLISHED. COST FOR POLISHED PRODUCT WILL BE CONSIDERABLY HIGHER.

C. Assemblies Containing Film-Faced Ceramic Glazing Material: Proprietary Category II safety glazing product in the form of a 3/16-inch-thick, ceramic glazing material unpolished on both surfaces, faced on one surface with a clear glazing film, and as follows:

MODIFY SPECIFIED FIRE RATING AS REQUIRED FOR PROJECT.

1. Fire-Protection Rating: 45 minutes, and permanently labeled by UL or Intertek/Warnock Hersey.
2. Product: Subject to compliance with requirements, provide one of the following:
   a. "FireLite NT" by Nippon Electric Glass Co., Ltd., and distributed by Technical Glass Products.
   b. SGG Keralite FR-F by Vetrotech Saint Gobain North America.

PRODUCTS DESCRIBED IN PARAGRAPH AND ASSOCIATED SUBPARAGRAPHS BELOW ARE LAMINATED AND QUALIFY AS SAFETY GLAZING, WITH SIMILAR PERFORMANCE TO PRODUCTS ABOVE. THEY MAY BE MORE DURABLE BECAUSE THERE IS NO EXPOSED FILM WHICH COULD BE DAMAGED. HOWEVER, THEY ARE MORE EXPENSIVE THAN THE PRODUCTS ABOVE.

D. Assemblies Containing Laminated Ceramic Glazing Material: Proprietary Category II safety glazing product in the form of 2 lites of clear ceramic glazing material laminated together to produce a laminated lite of 5/16-inch nominal thickness; polished on both surfaces; weighing 4 lb/sq. ft.; and as follows:

MODIFY SPECIFIED FIRE RATING AS REQUIRED FOR PROJECT. BOTH ARE AVAILABLE WITH UP TO A 3-HOUR RATING IN DOORS (SIZE LIMITITATIONS APPLY) AND UP TO 90 MINUTES IN OTHER LOCATIONS.

1. Fire-Protection Rating: 45 minutes, and permanently labeled by UL or Intertek/Warnock Hersey.
2. Product: Subject to compliance with requirements, provide one of the following:
   a. "FireLite Plus" (polished on both surfaces) by Nippon Electric Glass Co., Ltd., and distributed by Technical Glass Products.
   b. SGG Keralite FR-L (unpolished on both surfaces) by Vetrotech Saint Gobain North America.

PRODUCT IN FIRST PARAGRAPH AND SUBPARAGRAPHS BELOW DOES NOT PASS HOSE-STREAM TEST, BUT DOES QUALIFY AS SAFETY GLAZING. CONSIDER USING IN 20-MINUTE DOORS IN LIEU OF WIRED GLASS.

E. Assemblies Containing Specially Tempered Monolithic Glass: Proprietary Category II safety glazing product in the form of a specially tempered 1/4-inch-thick monolithic lite, and as follows:

1. Fire-Protection Rating: 20 minutes, and permanently labeled by UL or Intertek/Warnock Hersey.
2. Product: Subject to compliance with requirements, provide one of the following:
   a. "SuperLite" by SAFTI; a Division of O'Keeffe's Inc.

b. "PyroEdge-20" by Interedge Technologies.
c. "Fireglass 20" by Technical Glass Products.
d. "PyroSwiss Extra" by Vetratech Saint-Gobain.

THE FOLLOWING TWO CATEGORIES OF FIRE-RESISTANT GLAZING ARE CONSIDERABLY THICKER THAN 1/4" AND WILL REQUIRE SPECIAL FRAMING TO FIT IN A DOOR OR WINDOW. CONSIDER USE ONLY WHERE A BARRIER TO RADIANT HEAT PER ASTM E119 IS REQUIRED.

F. Assemblies Containing Laminated Glass with Intumescent Interlayers: Proprietary Category II safety glazing product in the form of multiple lites of Condition A (uncoated surfaces), Type I (transparent glass, flat), Class 1 (clear), Kind FT (fully tempered) float glass laminated with intumescent interlayers; and as follows:

1. Fire-Protection Rating: 60 minutes, and permanently labeled by UL or Intertek/Warnock Hersey.

MODIFY FIRE-PROTECTION RATING ABOVE AND PRODUCT NUMBER BELOW TO CORRESPOND WITH FIRE RATING REQUIRED FOR THE ASSEMBLY. THE THREE PRODUCTS BELOW MAY BE SEPDIFIED WITH UP TO A 2-HOUR RATING, AND THEY QUALIFY AS A RADIANT AND CONDUCTIVE HEAT BARRIER.

2. Product: Subject to compliance with requirements, provide one of the following:
   a. "PyroStop" by Pilkington Building Products North America and distributed by Technical Glass Products.
   b. "Pyrobel-60-25" by Glaverbel S.A. and distributed by Interedge Technologies.
   c. SGG Swissflam 60-N2 by Saint Gobain North America.

G. Assemblies Containing Gel-Filled, Dual-Glazed Units: Proprietary Category II safety glazing product in the form of two lites of Condition A (uncoated surfaces), Type I (transparent flat glass), Class 1 (clear), Kind FT (fully tempered) float glass; with a perimeter metal spacer separating lites and dual-edge seal enclosing a cavity completely filled with clear, fully transparent, heat-absorbing gel.

1. Fire-Protection Rating: 60 minutes, and permanently labeled by a testing and inspecting agency acceptable to authorities having jurisdiction.

THE FOLLOWING PRODUCT IS 1 1/8" THICK. MODIFY FIRE-PROTECTION RATING ABOVE AND PRODUCT NUMBER BELOW TO CORRESPOND WITH FIRE RATING REQUIRED FOR ASSEMBLY. ALSO AVAILABLE IN 45-MINUTE, 90-MINUTE AND 120-MINUTE RATINGS.

2. Product: Subject to compliance with requirements, "SuperLite II-XL 60 minute" by SAFTI; a Division of O'Keeffe's Inc.

2.4 MISCELLANEOUS GLAZING MATERIALS

A. General: Provide products of material, size, and shape complying with referenced glazing standard, requirements of manufacturers of glass and other glazing materials for application indicated, and with a proven record of compatibility with surfaces contacted in installation.

B. Edge Blocks and Setting Blocks: Neoprene, EPDM or silicone as required for compatibility with glazing sealants; of size shape and hardness recommended by manufacturer.

C. Perimeter Insulation for Fire-Resistive Glazing: Identical to product used in test assembly to obtain fire-resistance rating.

2.5 FABRICATION OF GLAZING UNITS

A. Fabricate glazing units in sizes required to glaze openings indicated for Project, with edge and face clearances, edge and surface conditions, and bite complying with written instructions of product manufacturer and referenced glazing publications, to comply with system performance requirements.

PART 3 - EXECUTION

3.1 EXAMINATION

A. Require Glazier to inspect work of framing erector for compliance with manufacturing and installation tolerances and for effective sealing of joinery. Do not allow glazing work to proceed until unsatisfactory conditions have been corrected.

3.2 PREPARATION

A. Clean glazing channels and other framing members to receive glass, immediately before glazing.

B. Comply with combined printed recommendations of glass manufacturers, of manufacturers of sealants, tapes, and other glazing materials, except where more stringent requirements are indicated, including those of referenced glazing standards.

3.3 GLAZING

A. General: Comply with combined written instructions of manufacturers of glass, sealants, gaskets and other glazing materials, unless more stringent requirements are indicated, including those in referenced glazing publications.

B. Provide edge and setting blocks to comply with requirements of referenced glazing standard, except where otherwise required by glass unit manufacturer.

C. Set units of glass in each series with uniformity of pattern, draw, bow and similar characteristics.

D. Protect glass edges from damage during handling and installation. Remove damaged glass from Project site and legally dispose of off Project site. Damaged glass is glass with edge damage or other imperfections that, when installed, could when installed, could weaken glass and impair performance and appearance.

E. Do not exceed edge pressures stipulated by glass manufacturers for installing glass lites.

F. Provide spacers for glass lites where length plus width is larger than 50 inches.

G. Provide edge blocking where indicated or needed to prevent glass lites from moving sideways in glazing channel, as recommended in writing by glass manufacturer and according to requirements in referenced glazing publications.

3.4 PROTECTION AND CLEANING

A. Protect glass from contact with contaminating substances resulting from construction operations.

B. Remove and replace glass which is broken, chipped, cracked. abraded or damaged in other ways during construction period, including natural causes, accidents and vandalism.

C. Wash glass on both faces by method recommended by glass manufacturer immediately before date of Substantial Completion.

END OF SECTION 088010

UNIVERSITY OF MICHIGAN
ARCHITECTURE, ENGINEERING AND CONSTRUCTION

ARCHITECTURE & ENGINEERING
326 East Hoover, Mail Stop B
Ann Arbor, MI 48109-1002
Phone: 734-764-3414
Fax: 734-936-3334

BuildingName
The Description of the Project
P00000000 0000

SPECIFICATION DIVISION 8

NUMBER SECTION DESCRIPTION

DIVISION 08 OPENINGS
SECTION 089000 - LOUVERS AND VENTS

END OF CONTENTS TABLE

DIVISION 08 OPENINGS
SECTION 089000 - LOUVERS AND VENTS

COORDINATE WITH MECHANICAL FOR LOUVER REQUIREMENTS AND LOCATION IN SPECIFICATION. ON SOME PROJECTS, MECHANICAL INCLUDES LOUVERS IN SECTION 233100.

THIS SECTION SPECIFIES EXTERIOR LOUVERS. USUALLY SPECIFY DOOR LOUVERS IN APPROPRIATE WOOD OR METAL DOOR SECTIONS. IF DOOR LOUVERS SPECIFIED HERE, INCLUDE APPROPRIATE CROSS REFERENCES IN BOTH DOOR AND LOUVER SECTIONS.

PART 1 - GENERAL

1.1 SUMMARY

A. Extent of louvers is indicated on drawings.

B. Type of louver is exterior wall mounted, drainable blade louver.

1.2 QUALITY ASSURANCE

A. Standards: Provide units whose ratings have been determined in compliance with AMCA Standard 500. Comply with "Architectural Sheet Metal Manual" recommendations for fabrication, construction and installation procedures.

B. Field Measurements: Verify size of louver units prior to fabrication.

1.3 SUBMITTALS

A. Product Data: Mfr's literature indicating compliance with requirements.

B. Samples for Initial Selection: Submit manufacturer's brochure indicating full range of manufacturer's standard finishes.

PART 2 - PRODUCTS

COORDINATE PRODUCT SELECTION WITH M/E.

2.1 ACCEPTABLE MANUFACTURERS

A. Manufacturer/Model: Ruskin Manufacturing Co./ELF 375D, or (subject to compliance with requirements of this Section) products of one of the following:

The Airolite Co.
American Warming and Ventilating Co.
Construction Specialties, Inc.
Industrial Louvers, Inc.
Tuttle and Bailey Co.

2.2 STATIONARY, DRAINABLE BLADE LOUVER

A. Provide units with aluminum extrusions not less than 0.081" thick, and with the following characteristics:

1. Free Area: Not less than 60 percent for 48 inch by 48 inch size.
2. Maximum Static Pressure Loss: 0.08 inch w.g. at 2100 cfm.

2.3 FABRICATION

A. Fabricate frames, including sills to suit adjacent construction and provide mullions at spacing no further apart than recommended by mfr.

B. Louver Screens: Inside mounted, galvanized steel bird screens, 1/2 inch by 1/2 inch grid, mounted in removable anodized aluminum frame.

C. Flanges: Provide flanged edges for duct connection.

D. Metal Finishes: Comply with NAAMM "Metal Finishes Manual" to provide uniformly finished products:

1. Inhibitive thermo-cured primer, 0.2 mil dry film thickness; thermo-cured fluorocarbon coating, 1.0 mil min. dry film thickness; "Kynar 500" based coatings. Color as selected by Architect from mfr's standard colors.

PART 3 - EXECUTION

3.1 INSTALLATION

A. Install plumb, level, in proper alignment with adjoining work, and in accordance with mfr's instructions. Use non-ferrous metal or galvanized anchors and inserts. Coat surfaces of aluminum in contact with dissimilar metals, concrete, or masonry with zinc chromate primer or bituminous paint.

1. Provide concealed gasket, flashings and joint fillers as indicated, and as required to make installation weather-tight.

B. Repair damaged finishes leaving no evidence of corrective work.

END OF SECTION 089000

UNIVERSITY OF MICHIGAN
ARCHITECTURE, ENGINEERING AND CONSTRUCTION

ARCHITECTURE & ENGINEERING
326 East Hoover, Mail Stop B
Ann Arbor, MI 48109-1002
Phone: 734-764-3414
Fax: 734-936-3334

BuildingName
The Description of the Project
P00000000 0000

SPECIFICATION DIVISION 9

NUMBER SECTION DESCRIPTION

DIVISION 09 FINISHES
SECTION 092116 - GYPSUM BOARD ASSEMBLIES

END OF CONTENTS TABLE

DIVISION 09 FINISHES
SECTION 092116 - GYPSUM BOARD ASSEMBLIES

THIS SECTION HAS BEEN PRE-EDITED TO APPLY ONLY TO SMALL RENOVATION PROJECTS. USE AIA MASTERSPEC SECTION OF SAME NAME AND NUMBER FOR SUCH ASSEMBLIES AS SUSPENDED GYP. CEILINGS HUNG BY MEANS OTHER THAN STUDS, CURVED WALLS, THERMALLY INSULATING WALLS AND WORK IN NEW STRUCTURES. USE SECTION 092913 "GYPSUM BOARD SHAFT-WALL ASSEMBLIES" FOR SHAFT-WALLS AROUND STAIRS AND ELEVATORS.

12/1/2017 - ADDED IDENTIFICATION REQUIREMENTS.

PART 1 - GENERAL

1.1 SUMMARY

A. This Section includes the following:

1. Gypsum board assemblies, including nonload-bearing steel framing.

DELETE BELOW IF NO WATER-RESISTANT GYPSUM DRYWALL BACKERS FOR TILE.

2. Water-resistant gypsum drywall backer units installed with gypsum board assemblies.

DELETE BELOW IF NO CEMENTITIOUS BACKERS FOR TILE.

3. Cementitious backer units installed with gypsum board assemblies.

DELETE BELOW IF NO SHAFT WALL ASSEMBLIES.

4. Gypsum board shaft-wall assemblies.

1.2 ASSEMBLY PERFORMANCE REQUIREMENTS

DELETE BELOW IF STC-RATED ASSEMBLIES ARE NOT REQUIRED. IF RETAINING PARA, INDICATE STC RATINGS ON DRAWINGS.

A. Sound Transmission Characteristics: Where STC ratings are indicated, provide assemblies with STC ratings determined and classified in accordance with ASTM E 90 and ASTM E 413, respectively.

DELETE BELOW IF NO FIRE-RATED GYPSUM BOARD ASSEMBLIES.

B. Fire Resistance: Provide gypsum board assemblies with fire-resistance ratings indicated.

DELETE BELOW IF NO SHAFT WALL IS INCLUDED IN PROJECT.

C. Shaft-Wall Performance Requirements: Provide gypsum board shaft-wall assemblies that are composed of proprietary gypsum board panels and metal components designed for erection from outside the shafts, and that comply with performance requirements specified as determined from testing manufacturers' standard assemblies representing those indicated for this Project.

1.3 SUBMITTALS

A. Product data for each type of product specified.

1.4 QUALITY ASSURANCE

DELETE BELOW IF NO FIRE-RATED ASSEMBLIES. INDICATE RATING, TESTING AGENCY, AND TESTING AGENCY'S DESIGN DESIGNATION ON DRAWINGS.

A. Fire-Test-Response Characteristics: Provide assemblies identical to those specified by indicated GA File Numbers in GA-600 "Fire Resistance Design Manual" or design designations in UL "Fire Resistance Directory," and that have been tested for fire resistance according to ASTM E 119 by an independent testing and inspecting agency.

PART 2 - PRODUCTS

2.1 MANUFACTURERS

A. Manufacturers: Subject to compliance with requirements, provide products by one of the following:

1. Gypsum Board and Related Products:
   a. CertainTeed Saint-Gobain
   b. Georgia-Pacific Corp.
   c. Lafarge North America.
   d. National Gypsum Co.
   e. United States Gypsum Co.
2. Steel Framing and Furring:
   a. Clark Dietrich Building Systems.
   b. Jaimes Industries. Inc.

DELETE BELOW IF NO TILE BACKER PANELS.

3. Gypsum Backer Units:
   a. Georgia-Pacific.
4. Cementitious Backer Units:
   a. FinPan, Inc.
   b. Georgia-Pacific Corp.
   c. National Gypsum Co.
   d. United States Gypsum Co.

DELETE BELOW IF NO SHAFT-WALL.

5. Gypsum Board Shaft-Wall Assemblies:
   a. Dietrich Industries, Inc.
   b. Georgia-Pacific Corp.
   c. National Gypsum Co.
   d. United States Gypsum Co.

2.2 STEEL FRAMING FOR SUSPENDED CEILINGS

DELETE ARTICLE IF NO SUSPENDED OR FURRED CEILINGS.

A. General: Provide components complying with ASTM C 754 for conditions indicated.

DELETE BELOW IF NO STEEL STUDS USED FOR CEILING/SOFFIT FRAMING.

B. Steel Studs for Ceiling Furring Channels: ASTM C 645, complying with the following requirements:

MODIFY BELOW TO 0.0329 INCH IF DESIRED.

1. Minimum Base (Uncoated) Metal Thickness: 0.027 inch, unless otherwise indicated.
2. Depth: 2-1/2 inches, unless otherwise indicated.
3. Protective Coating: ASTM A 653, G 40 hot-dip galvanized coating.

2.3 STEEL FRAMING FOR WALLS AND PARTITIONS

A. General: Provide framing shapes as indicated, and with the following finish:

1. Protective Coating: Manufacturer's standard corrosion-resistant coating.

USUALLY RETAIN ABOVE AND DELETE BELOW. RETAIN BELOW IF MOISTURE RESISTANCE IS IMPORTANT (WET LABS, TOILETS, ANIMAL ROOMS, EXTERIOR AREAS, ETC.).

2. Protective Coating: ASTM A 653, G 40 hot-dip galvanized coating.

B. Steel Studs and Runners: ASTM C 645, Manufacturer's standard profiles, and complying with the following requirements:

MODIFY BELOW TO 0.0329 INCH IF DESIRED.

1. Minimum Base (Uncoated) Metal Thickness: As indicated on drawings, or if not indicted, 0.0329 inch.

REVISE BELOW IF REQUIRED. COMMON ALTERNATIVES INCLUDE 1-5/8", 2-1/2", 4", AND 6".

2. Minimum Depth: 3-5/8 inches, unless otherwise indicated.

BELOW IS PROPRIETARY DEFLECTION-TOLERANT TOP TRACK SYSTEM FOR FIRE-RATED PARTITIONS UP TO UNDERSIDE OF METAL ROOF DECKS, OR OTHER CONDITIONS WHERE DEFLECTION OF MORE THAN ABOUT 1/4-INCH IS EXPECTED. NOTE THAT TYPICAL PERIMETER RELIEF JOINT DETAILS ARE LIMITED TO 1/2-INCH MAXIMUM WIDTH.

C. Deflection and Firestop Track: Top runner designed to allow partition heads to expand and contract with movement of structure above while maintaining continuity of the assembly. Comply with requirements of ASTM C 645 except configuration, of thickness indicated for studs and width to accommodate depth of studs indicated with flanges offset at midpoint to accommodate gypsum board thickness.

1. Offset Configuration: Shadow-line design with offset projecting out from depth of stud.
2. Product: Subject to compliance with requirements, a product that may be incorporated in the Work includes, but is not limited to, "Fire Trak" manufactured by Fire Trak Corp.

BELOW IS PROPRIETARY TOP TRACK SYSTEM FOR PARTITIONS UP TO UNDERSIDE OF SUSPENDED CEILINGS. DELETE IF WALLS PENETRATE CEILINGS.

D. Prefinished Top Track: Proprietary, pre-finished stud receptor track mounted to suspended ceiling grid. ASTM C 645, 25 gage galvanized steel; and as follows:

1. Accessories: Manufacturer's standard applied trim accessories for outside corners, wall ends and similar conditions requiring additional trim for a complete, finished appearance.
2. Finish: Baked-on polyester paint in color to match suspended ceiling grid manufacturer's standard white.
3. Product: Eliminator Track; Pro Products Mfg.

E. Steel Rigid Furring Channels: ASTM C 645, hat shaped, depth and 0.0179 inch minimum thickness of base (uncoated) metal, unless otherwise indicated. Provide furring brackets if recommended by manufacturer for application indicated.

INCH DEPTH FOR BELOW IS ALSO AVAILABLE.

1. Depth: 7/8 inch.

RETAIN BELOW IF STEEL SHEET BLOCKING OR BRACING IS REQUIRED. INDICATE LOCATIONS, LENGTHS, AND WIDTHS ON DRAWINGS OR ADD A DETAILED DESCRIPTION TO TEXT.

F. Steel Flat Strap and Backing Plate: Steel sheet for blocking and bracing, length and width as indicated, complying with ASTM A 653 or ASTM A 568, as follows:

1. Base (Uncoated) Metal Thickness: 0.0598 inch unless otherwise indicated.

2.4 GYPSUM BOARD PRODUCTS

A. General: Provide gypsum board of types indicated in maximum lengths available that will minimize end-to-end butt joints.

B. Gypsum Wallboard: ASTM C1396 and regular type for vertical surfaces, sag resistant for horizontal surfaces, Type X where required for fire-resistance-rated assemblies.

1. Thickness: Unless otherwise indicated, provide units that are 5/8 inch thick for all applications except 1/2 inch thick for ceilings and soffits.

DELETE ARTICLE IF NO SHAFT-WALL REQUIRED FOR PROJECT.

C. Gypsum Liner Panels: Proprietary liner panels as required for the specific fire-resistant-rated gypsum board shaft-wall assemblies indicated, with moisture-resistant paper facings.

DELETE BELOW IF CEMENTITIOUS BACKER UNITS ARE EXCLUSIVELY SPECIFIED AS BASE FOR TILE.

D. Glass-Mat, Water-Resistant Gypsum Backing Board: ASTM C 1178, of type and thickness indicated below:

1. Type and Thickness: Regular, 1/2 inch (12.7 mm) thick, unless otherwise indicated.
2. Type and Thickness: Type X, 5/8 inch (15.9 mm) thick, where required for fire-resistance-rated assemblies and where indicated.
3. Products: Subject to compliance with requirements, provide "Dens-Shield Tile Backer" manufactured by Georgia-Pacific Corp.

2.5 CEMENTITIOUS BACKER UNITS

DELETE ARTICLE IF CEMENTITIOUS BACKER UNITS ARE NOT REQUIRED FOR PROJECT OR IF SPECIFIED IN ANOTHER SECTION.

A. Provide cementitious backer units complying with ANSI A118.9 and in maximum lengths available to minimize end-to-end butt joints.

1. Thickness: Manufacturer's standard thickness, but not less than 7/16 inch, unless otherwise indicated.
2. Width: Manufacturer's standard width, but not less than 32 inches.

2.6 TRIM ACCESSORIES

A. Accessories: Formed steel sheet zinc coated by hot-dip process, or rolled zinc, complying with the requirements of ASTM C 1047 for cornerbead, L, LC, U shapes.

B. One-piece control joint formed from rolled zinc with V-shaped slot and removable strip covering slot opening.

ADD ACCESSORIES FOR CURVED EDGES HERE, IF ANY - SEE AIABAS.

2.7 JOINT TREATMENT MATERIALS

A. General: Provide joint treatment materials complying with ASTM C 475 and the recommendations of both the manufacturers of sheet products and of joint treatment materials.

BELOW IS ONLY DRYING TYPE COMPOUND. SPECIFY SETTING-TYPE JOINT COMPOUNDS WHERE FAST ONE-DAY FINISHING IS REQUIRED, OR WHERE RAPID DRYING CONDITIONS WOULD CAUSE DRYING-TYPE JOINT COMPOUNDS TO SHRINK AND LOSE SURFACE STRENGTH. SEE AIABAS FOR LANGUAGE AND DETAILS.

B. Joint Treatment for Gypsum Board: Provide paper reinforcing tape; and factory-packaged, vinyl-based, jobsite- or factory-mixed products. At Contractor's option, provide either specifically formulated taping and topping compounds or all-purpose compounds.

RETAIN BELOW IF CEMENTITIOUS BACKER UNITS ARE SPECIFIED IN THIS SECTION.

C. Joint Treatment Cementitious Backer Units: Tape and compound as recommended by cementitious backer unit manufacturer.

2.8 MISCELLANEOUS MATERIALS

DELETE PRODUCTS NOT NEEDED. EDIT PART 3 FIRST AND RETAIN APPLICABLE PRODUCTS IN THIS ARTICLE.

A. Acoustical Sealant for Exposed and Concealed Joints: Latex sealant complying with ASTM C 834; and subject to compliance with requirements, one of the following products:

1. PL Acoustical Sealant; ChemRex, Inc.; Contech Brands.
2. AC-20 FTR Acoust. and Insul. Sealant; Pecora Corp.
3. SHEETROCK Acoustical Sealant; USG Co.

B. Laminating Adhesive: Special adhesive or joint compound recommended for laminating gypsum panels.

C. Spot Grout: ASTM C 475, setting-type joint compound recommended for spot-grouting hollow metal door frames.

D. Foam Gaskets: Closed-cell vinyl foam adhesive-backed strips, 1/8 inch thick, in width to suit metal stud size.

E. Sound-Attenuation Blankets: Unfaced mineral-fiber blanket insulation produced by combining glass fibers with thermosetting resins to comply with ASTM C 665 for Type I (blankets without membrane facing).

CHANGE BELOW TO ASTM C 954 IF GYPSUM WILL BE ATTACHED TO COLD-FORMED STEEL FRAMING SPECIFIED IN DIVISION 5.

F. Fasteners: Provide size and type of screws recommended by manufacturer for application indicated, and as follows:

1. Metal and Gypsum Board: Steel drill screws complying with ASTM C 1002 and of size, corrosion resistance and holding power required to fasten steel framing and furring members securely to substrates involved.

RETAIN BELOW IF CEMENTITIOUS BACKER UNITS ARE SPECIFIED IN THIS SECTION.

2. Cementitious Backer Units: Corrosion-resistant screws recommended by panel manufacturer.

BELOW IS FOR ATTACHING STEEL FRAMING INTO CONCRETE.

3. Powder-Actuated Fasteners in Concrete: Corrosion-resistant materials suitable for application and capable of sustaining, without failure, a load equal to 5 times that imposed by ceiling construction, as determined by testing according to ASTM E 1190.

DELETE ARTICLE BELOW IF NO SHAFT-WALL.

2.9 SHAFT-WALL BASIC ASSEMBLY DESCRIPTION

A. Cavity Shaft-Wall Assemblies: Provide assemblies constructed of proprietary gypsum liner panels inserted between steel tracks at each end of studs; with specially shaped steel studs engaged in tracks and fitted between gypsum liner panels; and with gypsum board on finished side or sides applied to studs in the number of layers, thicknesses and arrangement indicated.

1. Gypsum Liner Panel Thickness: As standard with manufacturer for gypsum board shaft-wall assemblies indicated.
2. Stud Shape and Depth and Thickness: As standard with manufacturer for gypsum board shaft-wall assemblies indicated; but not less than 0.0284-inch minimum base metal thickness.
3. Room-Side Finish: As indicated.

PART 3 - EXECUTION

3.1 INSTALLING STEEL FRAMING, GENERAL

A. Steel Framing Installation Standard: Comply with ASTM C 754 and with ASTM C 840 requirements that apply to framing installation.

DELETE BELOW IF NONE. WHERE ITEMS TO BE SUPPORTED ARE NOT SHOWN ON DRAWINGS (SUCH AS OWNER'S LAB EQUIPMENT AND BINDER BINS FOR MOVABLE FURNITURE), CONSIDER SCHEDULING LOCATIONS AND SIZES OF SUPPORT PANELS IN "SCHEDULING" ARTICLE AT END OF SECTION, OR ON DRAWINGS.

B. Install supplementary framing, blocking, and bracing at terminations to support fixtures, equipment services, heavy trim, grab bars, toilet accessories, furnishings, or similar construction. Comply with details shown or, if not shown, with USG Co.'s "Gypsum Construction Handbook."

C. Isolate steel framing from building structure at the following locations:

BELOW ARE EXAMPLES ONLY. RETAIN OR REVISE TO SUIT PROJECT.

1. In ceilings where building structure abuts ceiling perimeter or penetrates ceiling.
2. Where partition framing and wall furring abut structure, except at floor.

INCLUDE DETAILS ON DRAWINGS SHOWING CONTROL- AND EXPANSION-JOINT CONSTRUCTION AND LOCATIONS FOR BOTH FIRE-RESISTANCE-RATED AND NONRATED ASSEMBLIES.

D. Independently frame both sides of joints at building control and expansion joints.

3.2 INSTALLING STEEL FRAMING FOR SUSPENDED CEILINGS

DELETE THIS ARTICLE IF NO SUSPENDED CEILINGS/SOFFITS.

A. Install suspended steel framing components in sizes and at spacings indicated, but not less than that required by the referenced steel framing installation standard.

1. Do not connect or suspend steel framing from ducts, pipes, or conduit, or attach to steel roof deck.
2. Framing Channel Spacing: 16 inches o.c.

USUALLY DELETE BELOW AND RETAIN ABOVE.

3. Framing Channel Spacing: 24 inches o.c.

B. Installation Tolerances: Install with cross-furring members level to within 1/8 inch in 12 feet as measured both lengthwise on each member and transversely between parallel members.

3.3 INSTALLING STEEL FRAMING FOR WALLS AND PARTITIONS

A. Install runners (tracks) at floors and ceilings, and structural walls and columns where gypsum board stud assemblies abut other construction.

RETAIN BELOW IF STUDS WILL ABUT MASONRY OR DISSIMILAR METALS AT EXTERIOR WALLS.

1. Where studs are installed directly against exterior walls, install foam gaskets between studs and wall.

B. Installation Tolerances: Install each steel framing and furring member so that fastening surfaces do not vary more than 1/8 inch from the plane formed by the faces of adjacent framing.

C. Extend partition framing to height indicated. Continue framing over frames for doors and openings and frame around ducts penetrating partitions above ceiling to provide support for gypsum board.

EDIT PARA BELOW TO SUIT PROJECT CONDITIONS. BE SURE TO SHOW PERIMETER RELIEF DETAIL ON DRAWINGS - ONE CAN BE FOUND IN THE "USE OF MANUAL" CHAPTER OF THE GYPSUM ASSOCIATION "FIRE RESISTANCE AND SOUND CONTROL MANUAL."

1. Terminate partition framing as shown on Drawings; or if not shown, as follows:

SELECT ONE BELOW.

a. At suspended ceilings.

DELETE IF NOT REQUIRED. SEE DISCUSSION UNDER "PRODUCTS" PART IN THIS SECTION.

1) Install proprietary prefinished top track.

b. 6-inches above exposed face of suspended acoustic ceiling panels.

c. Full height to structural supports or substrates above suspended ceilings, if any. Cut studs 1/2 inch short of full height to provide perimeter relief.

EDIT BELOW TO SUIT PROJECT, OR DELETE IF NOT REQUIRED. SEE DISCUSSION UNDER "PRODUCTS" PART IN THIS SECTION.

1) Install proprietary deflection and firestop track at fire-rated partitions, and as otherwise indicated.

RETAIN, REVISE OR DELETE BELOW TO SUIT PROJECT.

2. For STC-rated and fire-resistance-rated partitions that extend to the underside of floor/roof slabs and decks or other continuous solid structural surfaces to obtain ratings, install framing around structural and other members extending below floor/roof slabs and decks, as needed, to support gypsum board closures needed to make partitions continuous from floor to underside of solid structure.

D. Install steel studs and furring in sizes and at spacings as follows:

1. Maximum spacing between studs: 16-inches o.c., unless otherwise indicated.

SELECT EITHER ABOVE OR BELOW. USE 16-INCH MINIMUM SPACING FOR CEMENTITIOUS BACKER UNITS.

2. Maximum spacing between studs: 24-inches o.c., unless otherwise indicated.

E. Frame openings to comply with GA-219, and with applicable published recommendations of gypsum board manufacturer, unless otherwise indicated. Attach vertical studs at jambs with screws either directly to frames or to jamb anchor clips on door frames; install runner track section (for cripple studs) at head and secure to jamb studs.

1. Install 2 studs at each jamb, unless otherwise indicated.

ADD REQUIREMENTS FOR INSTALLATION OF THERMAL INSULATION AND VAPOR BARRIERS HERE. SEE AIABAS FOR DETAILS.

3.4 APPLYING AND FINISHING GYPSUM BOARD, GENERAL

A. Gypsum Board Application and Finishing Standards: Install and finish gypsum panels to comply with ASTM C 840 and GA-216.

B. Install gypsum panels with face side out.

C. Locate both edge or end joints over supports, except in ceiling applications where intermediate supports or gypsum board back-blocking is provided behind end joints. Do not place tapered edges against cut edges or ends. Stagger vertical joints on opposite sides of partitions. Avoid joints other than control joints at corners of framed openings where possible.

DELETE BELOW IF HOLLOW METAL DOOR FRAMES ARE NOT USED IN STEEL-FRAMED PARTITIONS.

D. Spot grout hollow metal door frames for solid-core wood doors, hollow metal doors, and doors over 32 inches wide. Apply spot grout at each jamb anchor clip and immediately insert gypsum panels into frames.

E. Form control and expansion joints at locations indicated and as detailed, with space between edges of adjoining gypsum panels, as well as supporting framing behind gypsum panels.

F. Isolate perimeter of gypsum board partitions at structural abutments, except floors, with 1/4- to 1/2-inch-wide spaces and trim edges with LC-bead edge trim where edges of gypsum panels are exposed. Seal joints between edges and abutting structural surfaces with acoustical sealant.

DELETE BELOW IF NO SOUND-RATED PARTITIONS.

G. Where STC-rated gypsum board assemblies are indicated, seal construction at perimeters, behind control and expansion joints, openings, and penetrations with a continuous bead of acoustical sealant including a bead at both faces of the partitions. Comply with ASTM C 919 and manufacturer's recommendations for location of edge trim and closing off sound-flanking paths around or through gypsum board assemblies, including sealing partitions above acoustical ceilings.

H. Space fasteners in gypsum panels according to referenced gypsum board application and finishing standard and manufacturer's recommendations.

1. Space screws a maximum of 12 inches o.c. for vertical applications.

DELETE BELOW IF NO TILE BACKER BOARD.

I. Space fasteners in tile substrate panels a maximum of 8 inches o.c.

3.5 GYPSUM BOARD APPLICATION METHODS

A. Install gypsum wallboard panels on ceilings prior to wall/partition board application and at right angles to framing.

B. On partitions/walls, apply gypsum panels horizontally (perpendicular to framing), unless parallel application is required for fire-resistance-rated assemblies. Use maximum-length panels to minimize end joints. Stagger abutting end joints not less than one framing member in alternate courses of board.

1. On Z-furring members, apply gypsum panels vertically (parallel to framing) with no end joints. Locate edge joints over furring members.

DELETE PARA AND SUBPARAS BELOW IF NONE.

C. Wall Tile Substrates: For substrates indicated to receive thin-set ceramic tile and similar rigid applied wall finishes, comply with the following:

DELETE BELOW IF WATER-RESISTANT GYPSUM BOARD IS RETAINED BELOW.

1. Install cementitious backer units to comply with ANSI A108.11 at showers, and where indicated.

DELETE BELOW IF CEMENTITIOUS BACKER UNITS ARE RETAINED ABOVE. DRAWINGS SHOULD SHOW SEALANT INSTALLED IN 1/4-INCH GAP.

2. Install water-resistant gypsum backing board panels at showers, tubs, and where indicated. Install with 1/4-inch open space where panels abut other construction or penetrations.

RETAIN BELOW IF REGULAR GYPSUM BOARD IS ACCEPTABLE AS WALL-TILE SUBSTRATE FOR DRY LOCATIONS.

3. Install gypsum wallboard panels with tapered edges taped and finished to produce a flat surface except at showers, tubs, and other locations indicated to receive water-resistant panels.

D. Apply gypsum panels to supports with screws.

E. Direct-Bonding to Substrate: Where gypsum panels are indicated as directly adhered to a substrate (other than studs, joists, furring members, or base layer of gypsum board), comply with gypsum board manufacturer's recommendations, and temporarily brace or fasten gypsum panels until fastening adhesive has set.

3.6 INSTALLING TRIM ACCESSORIES

A. General: Fasten trim accessories according to accessory manufacturer's directions for type, length, and spacing of fasteners.

BELOW ARE EXAMPLES OF UNIVERSAL SCOPE DEFINITIONS FOR USING TRIM. REVISE AS DESIRED OR SHOW ON DRAWINGS.

B. Install cornerbead at external corners.

C. Install edge trim where edge of gypsum panels would otherwise be exposed. Provide edge trim type with face flange formed to receive joint compound, except where other types are indicated.

D. Install control joints according to ASTM C 840 and manufacturer's recommendations and in specific locations approved by Architect for visual effect.

DELETE BELOW IF NO SHAFT-WALL INCLUDED IN PROJECT.

3.7 INSTALLATION OF GYPSUM BOARD SHAFT-WALL ASSEMBLIES

A. General: Install gypsum board shaft-wall assemblies to comply with performance and other requirements indicated as well as with manufacturer's installation instructions and ASTM C 754 for installing steel framing.

B. Do not bridge building expansion joints with shaft-wall assemblies; frame both sides of joints with furring and other support as indicated.

C. At penetrations in shaft wall, maintain fire-resistance rating of entire shaft-wall assembly by installing supplementary steel framing around perimeter of penetration and fire protection behind boxes containing wiring devices similar items.

3.8 FINISHING GYPSUM BOARD ASSEMBLIES

A. Levels of Gypsum Board Finish: Provide the following levels of gypsum board finish per GA-214.

DELETE LEVELS BELOW THAT DO NOT APPLY TO PROJECT.

1. Level 1 for ceiling plenum areas, concealed areas, and where indicated, unless a higher level of finish is required for fire-resistance-rated assemblies and sound-rated assemblies.
2. Level 4 for gypsum board surfaces, unless otherwise indicated.

BELOW REQUIRES SKIM COAT OVER ENTIRE SURFACE. RETAIN IF RIGID TRIM IS INSTALLED ON SHORT WALL SEGMENTS TO AVOID GAPS BEHIND TRIM THAT OCCUR BETWEEN TWO CLOSELY SPACED, BUILT UP EDGES.

3. Level 5 for gypsum board the following surfaces where wood, stone, or cast plastic trim or base are indicted:
   a. At gypsum column enclosures.
   b. Where wall segments are less than 48-inches wide.
   c. Where indicated.

B. Where Level 1 gypsum board finish is indicated, embed tape in joint compound.

PARA BELOW ASSUMES LEVEL 4 FINISH IS DEFAULT REQUIREMENT. IF NOT, REVISE OR DELETE PARA TO SUIT PROJECT.

C. For Level 4 gypsum board finish, embed tape in joint compound and apply first, fill (second), and finish (third) coats of joint compound over joints, angles, fastener heads, and accessories. Touch up and sand between coats and after last coat as needed to produce a surface free of visual defects and ready for decoration.

DELETE BELOW IF LEVEL 5 IS NOT REQUIRED FOR PROJECT.

D. Where Level 5 gypsum board finish is indicated, after application of embedding, fill and finish coats, apply a thin, uniform skim coat of joint compound over entire surface. Touch up and sand between coats and after last coat as needed to produce a surface free of visual defects, tool marks, and ridges and ready for decoration.

DELETE BELOW IF NO CEMENTITIOUS BACKER UNITS OR IF SPECIFIED IN DIVISION 9 SECTION "TILE."

E. Finish cementitious backer units to comply with unit manufacturer's directions.

3.9 IDENTIFICATION

A. Provide permanent identification of all assemblies requiring opening protectives including fire walls, fire barriers, fire partitions, and smoke barriers.

B. Install in accordance with the requirements of Michigan Building Code chapter 7.

C. Location:

1. Locate in accessible concealed spaces above finished ceiling. In locations without accessible concealed location, coordinate location with architect.
2. Locate within 15 feet of the end of each wall and at intervals not exceeding 30 feet measured horizontally along the assembly.

D. Signage requirements:

1. Lettering:
   a. 3-inch minimum; 3/8-inch stroke width.

b. Color: Red on white background

2. Verbiage incorporating project specific hourly rating. Refer to life safety plan for rating requirements:
   a. FIRE RATED ASSEMBLY (__HR) - PROTECT ALL OPENING
   b. SMOKE BARRIER - PROTECT ALL OPENINGS

3.10 CLEANING AND PROTECTION

A. Promptly remove any residual joint compound from adjacent surfaces.

END OF SECTION 092116

UNIVERSITY OF MICHIGAN
ARCHITECTURE, ENGINEERING AND CONSTRUCTION

ARCHITECTURE & ENGINEERING
326 East Hoover, Mail Stop B
Ann Arbor, MI 48109-1002
Phone: 734-764-3414
Fax: 734-936-3334

BuildingName
The Description of the Project
P00000000 0000

SPECIFICATION DIVISION 9

NUMBER SECTION DESCRIPTION

DIVISION 09 FINISHES
SECTION 092300 - GYPSUM PLASTERING

END OF CONTENTS TABLE

DIVISION 09 FINISHES
SECTION 092300 - GYPSUM PLASTERING

EDIT THIS SECTION ON WET PLASTER WORK IN CONJUNCTION WITH USG GYPSUM CONSTRUCTION HANDBOOK OR OTHER REFERENCE WORK.

PART 1 - GENERAL

1.1 SUMMARY

A. Extent of plaster work in indicated on Drawings and in schedules.

B. Type of plaster work and accessories include:

1. Gypsum plaster.
2. Gypsum board plaster base.
3. Metal lath.

1.2 SUBMITTALS

A. Submit manufacturer's product literature for each product specified.

1.3 DELIVERY, STORAGE AND HANDLING

A. Deliver materials in original packages bearing brand name and identification of manufacturer.

PART 2 - PRODUCTS

2.1 PLASTER MATERIALS

SELECT ONE OF THE FOLLOWING OR DELETE IF GYPSUM BOARD LATH IS USED

A. Base Coat Plaster: Comply with ASTM C 28 and Federal Specification SS-P-00402B, Type II.

1. Product: U.S. Gypsum Co.; "Regular Red Top Gypsum Plaster" or equivalent of other approved manufacturer.

B. Base Coat Plaster: High strength gypsum neat plaster with a minimum average dry compressive strength of 2,800 psi per ASTM C 472 for a mix of 100 lbs. plaster and 2 cu. ft. of sand.

1. Product: Structo-Base; United States Gypsum Co.

SELECT ONE OF THE FOLLOWING

C. Gypsum Gauging Plaster: Comply with ASTM C28 and Federal Specification SS-P-00402B, Type V.

1. Manufacturer: U.S. Gypsum Co. "Champion", "Star", "Red Top", or equal.

D. Gypsum Gauging Plaster: High-strength gypsum gauging plaster, ASTM C 28, with a minimum average dry compressive strength of 5,000 psi per ASTM C 472 for a neat mix.

1. Product: Structo-Gauge; United States Gypsum Co.

E. Finishing Hydrated Limes: ASTM C 206, type as indicated below:

1. Type S: Special hydrated lime for finishing purposes.
2. Manufacturer/Product: Provide one of the following:
   a. "Ivory Finish Lime"; United States Gypsum Co.
   b. "Snowdrift Finish Lime"; United States Gypsum Co.

DELETE BELOW IF GYPSUM BOARD BASE IS USED

F. Aggregates for Base Coat Plasters: ASTM C 35, types as indicated below:

1. Sand aggregate, clean and free of dirt, clay and other deleterious materials.

G. Aggregates for Finish Coat Plaster with Floated Finish: ASTM C 35; graded per ASTM C 842, type as indicated below.

1. Sand aggregate, clean and free of dirt, clay and other deleterious materials.

2.2 LATH

SELECT ONE OF THE FOLLOWING LATH TYPES

A. Gypsum Lath: Gypsum board plaster base to comply with ASTM C37 and Federal Specification SS-L-30D, Type I.

1. Manufacturer: U.S. Gypsum Co. "Rocklath" or equal.

B. Metal Lath: Diamond metal mesh (approximately 11,000 meshes per sq yd) complying with Federal Specification QQ-L-101C. Mesh to be composed of expanded sheet steel that has been coated with asphaltum paint. Metal lath to have a weight of 3.4 lbs per sq yd or greater.

1. Manufacturer: U.S. Gypsum Co. "Junior Diamond Mesh Lath" or equal.

C. Water for Mixing and Finishing Plaster: Drinkable, free of substances capable of affecting plaster set or of damaging plaster, lath or accessories.

2.3 ACCESSORIES

A. General: Comply with material provisions of ASTM C 841; coordinate depth of accessories with thicknesses and number of plaster coats required.

B. Provide metal accessories including casing beads, corner beads, grounds screeds, cornerite and stripite as indicated and as recommended by manufacturer of plaster materials.

C. Metal Corner Beads: Type as indicated below, fabricated from zinc coated (galvanized) steel.

1. Type: Bull nose, radius 3/4 inch minimum, with expanded flanges, at locations indicated.

2.4 MIXING

A. Mechanically mix cementitious and aggregate materials for plasters to comply with applicable referenced application standard and with recommendations of plaster manufacturer.

PART 3 - EXECUTION

3.1 APPLICATION

A. Prepare monolithic surfaces for bonded base coats and use bonding compound or agent to comply with requirements of referenced plaster application standards for conditioning of monolithic surfaces.

B. Tolerances: Do not deviate more than 1/8 inch in 10 feet from a true plane unfinished plaster surfaces, as measured by a 10 feet straightedge placed at any location on surface.

C. Sequence plaster application with the installation and protection of other work, so that neither will be damaged by the installation of the other.

D. Plaster flush with metal frames and other built-in metal items or accessories which act as a plaster ground, unless otherwise indicated. Where plaster is not terminated at metal by casing beads, cut base coat free from metal before plaster sets and groove finish coat at the junctures with metal.

E. Apply thicknesses and number of coats of plaster as indicated and to match existing adjacent applications; or as required by referenced standards.

F. Interior Gypsum Plaster Application Standard: Apply gypsum plaster materials, composition, mixes, and finishes indicated to comply with ASTM C 842.

G. Number of Coats: Apply gypsum plaster, of composition indicated, to comply with the following requirements.

1. Use two-coat work over concrete masonry units.

H. Finish Coats: Apply finish coats to comply with the following requirements:

1. Floated finish for gypsum finish coats of type and where indicated; match existing adjacent materials for texture and color.

3.2 CLEANING AND PROTECTION

A. Remove temporary protection and enclosure of other work. Promptly remove plaster from door frames, windows, and other surfaces which are not to be plastered. Repair floors, walls and other surfaces which have been stained, marred or otherwise damaged during the plastering work. When plastering work is completed, remove unused materials, containers and equipment and clean floors of plaster debris.

B. Provide final protection and maintain conditions, in a manner suitable to Installer, which ensures plaster work being without damage or deterioration at time of substantial completion.

END OF SECTION 092300

UNIVERSITY OF MICHIGAN
ARCHITECTURE, ENGINEERING AND CONSTRUCTION

ARCHITECTURE & ENGINEERING
326 East Hoover, Mail Stop B
Ann Arbor, MI 48109-1002
Phone: 734-764-3414
Fax: 734-936-3334

BuildingName
The Description of the Project
P00000000 0000

SPECIFICATION DIVISION 9

NUMBER SECTION DESCRIPTION

DIVISION 09 FINISHES
SECTION 093000 - TILING

END OF CONTENTS TABLE

DIVISION 09 FINISHES
SECTION 093000 - TILING

THIS SECTION HAS BEEN PRE-EDITED TO APPLY ONLY TO SMALL RENOVATION PROJECTS USING UNGLAZED CERAMIC TILE. EDIT THIS SECTION USING THE TCA HANDBOOK (OR WEBSITE). USE AIA MASTERSPEC SECTION OF SAME NAME AND NUMBER FOR COMPLEX PROJECTS.

PART 1 - GENERAL

1.1 SUMMARY

A. Extent of ceramic tile is shown on Drawings.

B. Types of ceramic tile include:

1. Unglazed ceramic mosaic tile.

1.2 SUBMITTALS

A. Product Data: Mfr's product data and installation instructions for tile work.

B. Samples for Initial Selection: Submit 1 sample card for each type of ceramic tile, showing full range of manufacturer's standard colors, textures and patterns.

DELETE BELOW IF NO COLORED GROUT.

1. Provide color sample kit for tinted grout.

1.3 QUALITY ASSURANCE

A. Standards: Comply with referenced ANSI and ASTM materials standards, and with referenced installation methods and materials of referenced Tile Council of America (TCA) Handbook numbers.

PART 2 - PRODUCTS

2.1 ACCEPTABLE MANUFACTURERS

A. Manufacturers: Subject to compliance with specified performance requirements, provide product of one of the following:

American Olean Tile.
Dal-Tile.
Mannington.
Winburn Tile Mfg. Co.

BELOW FOR UNGLAZED PORCELAIN CERAMIC TILE ONLY. CONSULT MANUFACTURER'S LITERATURE FOR OTHER TILE CHOICES.

2.2 UNGLAZED CERAMIC MOSAIC TILE

A. Factory-mounted flat tile and as follows:

1. Type: Porcelain.
2. Tile Grade: "Standard".
3. Wearing Surface: Without abrasive content.
4. Face: Plain with all purpose edges.
5. Size and Thickness: Modular 2 inch by 2 inch square; 1/4 inch thick.
6. Trim: Continuous cove base at floor perimeter; bullnose and cove trim where around projections.
   a. Trim Shapes: Same material, size, color, and texture as field tile.
7. Colors, Textures, and Patterns: Selected by Architect from mfr's standard smooth texture, solid color range.

DELETE FOLLOWING IF NOT REQUIRED. BRASS STRIP AVAILABLE FOR SAME PURPOSE IF DESIRED.

2.3 THRESHOLDS

A. Marble Thresholds: Group "A"; ASTM C 503, for exterior use with minimum hardness of 10.0 per ASTM C 241; white with honed finish, unless otherwise indicated.

2.4 MORTAR AND GROUT MATERIALS

THE FOLLOWING MATERIALS ARE EXAMPLES ONLY - FIRST EDIT PART 3 TO DETERMINE TCA INSTALLATION METHODS AND THEN EDIT THIS PORTION TO INCLUDE APPROPRIATE MATERIALS.

A. Comply with the following requirements:

1. Portland Cement: ASTM C 150 Type 1
2. Sand: ASTM C 144
3. Water: Potable

ALSO CONSIDER USING PROPRIETARY PRODUCT SUCH AS MAPEI OR LATICRETE, AS APPLICABLE.

4. Mortar: As follows:
   a. Floors: Latex-portland cement conforming to ANSI A118.4.
   b. Walls, and single unit shower stall floors: Job mixed, material proportions as indicated.
5. Bond Coat: Dryset mortar or latex-modified portland cement as determined by TCA recommendations.
6. Grout: ANSI A118.6, Latex modified portland cement.

B. For indicated application, provide the following additional materials:

1. Walls:
   a. Membrane: 4 mil polyethylene.
   b. Lath: Galvanized or painted metal.
   c. Lime: ASTM C 206, type S; or ASTM C 207, type S.
2. Single unit Shower Stalls:
   a. Reinforcing: ASTM A82 and A185, 2 inch by 2 inch by 16/16 gage welded wire mesh.

PART 3 - EXECUTION

INCLUDE BELOW FOR THINSET TILE.

3.1 PREPARATION

A. In presence of Installer, inspect substrate conditions for compliance with ceramic tile manufacturer's requirements, and suitability for indicated TCA installation method. Report, in writing, deleterious conditions to Owner's Representative.

USUALLY INCLUDE BELOW.

1. Obtain Architect's written approval before beginning installation.

3.2 INSTALLATION

A. In general, strictly comply with current Tile Council of America Handbook methods as follows:

EDIT FOLLOWING WITH TCA BOOKLET.

1. Over new and existing masonry walls: TCA Method W222.
2. Over new and existing concrete floors: TCA method F113.
3. In single shower stall floors: TCA method B414.

B. Joint Pattern: Use grid pattern with 1/16" wide joints.

1. Floor Installations: Align parallel and perpendicular to walls.
2. Wall Installations: Align vertical and level.

C. Install marble thresholds where shown on Drawings, and whether or not shown on Drawings as follows:

1. At edges of ceramic tile installation abutting dissimilar flooring materials (e.g. concrete, carpet, and quarry tile).

3.3 CLEANING AND PROTECTION

A. Clean tile in accordance with applicable ANSI standard for type of tile and method of installation used and mfr's instructions.

B. Apply heavy kraft paper or other heavy protective covering to prevent surface damage during construction operations.

END OF SECTION 093000

UNIVERSITY OF MICHIGAN
ARCHITECTURE, ENGINEERING AND CONSTRUCTION

ARCHITECTURE & ENGINEERING
326 East Hoover, Mail Stop B
Ann Arbor, MI 48109-1002
Phone: 734-764-3414
Fax: 734-936-3334

BuildingName
The Description of the Project
P00000000 0000

SPECIFICATION DIVISION 9

NUMBER SECTION DESCRIPTION

DIVISION 09 FINISHES
SECTION 093033 – STONE TILING

END OF CONTENTS TABLE

DIVISION 09 FINISHES
SECTION 093033 – STONE TILING

THIS MASTER SPECIFICATION SECTION INCLUDES MANUFACTURED TILE FLOORING ONLY. REFER TO AIA MASTERSPEC FOR OTHER INTERIOR STONEWORK.

PART 1 - GENERAL

1.1 SUMMARY

A. Extent of interior stonework is indicated on Drawings.

B. Interior stonework includes the following:

1. Granite tile flooring.
2. Cast marble tile flooring.

1.2 SUBMITTALS

A. Product Data: Submit manufacturer's technical data for each type of stone, stonework accessory and other manufactured product required.

B. Samples for Initial Selection: Furnish samples of portions of actual stone tile, showing manufacturer's full range of standard products, for Architect's selection. Submit 2 or more samples of each selection representing the full range of color and pattern to be expected in installed material.

C. Samples for Verification: Provide a 6-inch by 6-inch sample of each selected color for verification purposes. Select samples to represent the full range of color and pattern to be expected in the finished installation.

1.3 QUALITY ASSURANCE

A. Standards: Comply with referenced ANSI and ASTM materials standards, and with referenced installation methods and materials of referenced Tile Council of America (TCA) Handbook numbers.

PART 2 - PRODUCTS

BELOW ARE EXAMPLES OF TWO TYPES OF FLOOR TILES. MODIFY TO SUIT PROJECT.

2.1 GRANITE FLOOR TILE

A. Granite Floor Tile: Furnish tiles that have a polished face, and that are sound, durable, and free from pronounced seams or objectionable mineral stains.

1. Size: Nominal 12-inches by 12-inches by 3/8-inch thick.
2. Edges: Slightly beveled.

B. Product: Provide products of Cold Spring Granite.

1. Color/Pattern: "Charcoal Black".

2.2 CAST MARBLE TILE

A. Factory cast marble floor tile consisting of not less than 90 percent marble aggregate with polymer binder.

1. Wearing Surface: Polished, without abrasive content.
2. Edges: Beveled.
3. Size: Modular 12-inch by 12-inch by 3/8-inch thick.
4. Colors, Textures, and Patterns: Selected by Architect from mfr's standard smooth texture, solid color range.

B. Manufacturer: Provide the following product:

1. "Armstar", Armstrong World Industries, Inc.

2.3 MORTAR AND GROUT MATERIALS

MODIFY MATERIALS BELOW TO COORDINATE WITH TCA INSTALLATION METHOD SELECTED.

A. Portland Cement: ASTM C 150 Type 1

B. Sand: ASTM C 144

C. Water: Potable

D. Mortar Bond Coat: Dryset mortar or latex-modified portland cement as determined by TCA recommendations.

E. Grout: ANSI A118.6, Latex modified portland cement.

2.4 ACCESSORIES

A. Provide manufacturer's standard carpet thresholds of type, size and profile indicated.

1. Manufacturer/Model Thresholds: Pemko; No. 174C, or equivalent products of National Guard, Reese, Zero.

PART 3 - EXECUTION

3.1 PREPARATION

A. Clean adhesive and residue left from previous flooring off concrete floor surface that is to receive new granite floor tile. Before initiating floor tile installation, inspect floor to ensure that it is free of cracks and waxy or oily films. Correct if necessary.

1. Where uneven floor levels or holes occur, fill, patch, and provide underlayment as required to level surface prior to installation of finished floor material. Underlayment may be latex cement as applicable.
2. Comply with flooring manufacturer's recommendations for type(s) of materials, project conditions, and intended use.

3.2 INSTALLATION

A. Installation: In general, strictly comply with Tile Council of America Handbook methods as follows:

BELOW IS EXAMPLE ONLY - MODIFY TO SUIT PROJECT USING TCA HANDBOOK IN SWEET'S.

1. Over existing vinyl composition tile on concrete slab base: TCA method F113-90.

B. Joint Pattern: Use grid pattern with 1/16-inch wide joints; align parallel and perpendicular to walls.

C. After floor tile is installed, clean grout off floor tiles to leave a shiny surface.

RETAIN BELOW IF THRESHOLDS ARE INCLUDED.

D. Install thresholds where shown on Drawings, and whether or not shown on drawings as follows:

MODIFY STATEMENT BELOW TO SUIT PROJECT.

1. At edges of stone tile flooring installation abutting dissimilar flooring materials (e.g. concrete, carpet, and vinyl composition tile).

E. Attic Stock: Provide 4 full tile for Owner's future use.

3.3 CLEANING AND PROTECTION

A. Clean tile in accordance with applicable ANSI standard for type of tile and method of installation used and mfr's instructions.

B. Apply heavy kraft paper or other heavy protective covering to prevent surface damage during construction operations.

3.4 TILE COLOR SCHEDULE

BELOW IS EXAMPLE ONLY.

1. Color No. T1: 8013 "Peppered White".
2. Color No. T2: 8018 "Blued Carnelian".

END OF SECTION 093033

UNIVERSITY OF MICHIGAN
ARCHITECTURE, ENGINEERING AND CONSTRUCTION

ARCHITECTURE & ENGINEERING
326 East Hoover, Mail Stop B
Ann Arbor, MI 48109-1002
Phone: 734-764-3414
Fax: 734-936-3334

BuildingName
The Description of the Project
P00000000 0000

SPECIFICATION DIVISION 9

NUMBER SECTION DESCRIPTION

DIVISION 09 FINISHES
SECTION 095100 - ACOUSTICAL CEILINGS

END OF CONTENTS TABLE

DIVISION 09 FINISHES
SECTION 095100 - ACOUSTICAL CEILINGS

5/19/2014 -- UPDATED TO INCLUDE LATEST PRODUCT INFORMATION.

REMOVED DIRECT ADHERED TILES. CONSULT MANUFACTURER LITERATURE AND AIA MASTERSPEC FOR DIRECT ADHERED ACOUSTICAL TILE APPLICATIONS

PART 1 - GENERAL

1.1 SUMMARY

A. Extent of acoustical ceilings is indicated on Drawings and schedules.

FIRE-RATED CEILINGS ARE NOT INCLUDED IN THIS MASTER. CONSULT CATALOGS FOR PRODUCTS AND INSTALLATION REQUIREMENTS.

B. Types of acoustical ceiling products include the following:

EDIT BELOW TO SUIT PROJECT REQUIREMENTS.

1. Acoustical lay-in panels of the following types:
   a. Standard acoustic panels.
   b. Premium acoustic panels.
   c. Router-cut patterned acoustic panels.
   d. Gypsum core acoustic panels.
2. Suspended grid systems, specialty trim and accessories.

INCLUDE ARTICLE BELOW IF DEMOLITION OPERATIONS WILL RECYCLE ACOUSTICAL PANELS. NOTE THAT NOT ALL ACOUSTICAL MATERIAL IS ABLE TO BE RECYCLED. ASBESTOS-CONTAINING PRODUCTS CANNOT BE RECYCLED, AND FOIL-BACKED AND FIBERGLASS PRODUCTS WILL NOT BE ACCEPTED BY MANUFACTURERS FOR RECYCLING.

1.2 RELATED SECTIONS

A. Refer to Division 02 Section "Selective Demolition" for requirements for recycling demolished acoustical ceiling products.

1.3 SUBMITTALS

A. Product Data: Submit manufacturer's literature, including certification by a recognized independent testing laboratory, indicating compliance with requirements.

INCLUDE BELOW FOR ALL PROJECTS.

B. Affidavits of Compliance to be included in final inspection manual:

1. Provide manufacturer's letter of certification showing compliance with finish testing and classification requirements referenced by current adopted NFPA 101 "Life Safety Code".

2. Letter shall include project number, project name, and building name.

1.4 QUALITY ASSURANCE

A. Standards: Comply with the following:

1. Acoustical Materials: ASTM E 1264.
2. Suspension Systems: ASTM C 635 for materials; ASTM C 636 for installation.
3. Surface Burning Characteristics: Flame spread: 25 or less; smoke developed: 50 or less; per ASTM E 84. UL listed and marked.
4. Seismic Standard: Comply with Ceilings and Interior Systems Contractors Association (CISCA) "Recommendations for Direct-Hung Acoustical Tile and Lay-in Panel Ceilings--Seismic Zones 0-2."

B. Source Limitations: Obtain each type of acoustic panel and related grid system from one source and by a single manufacturer.

1.5 PROJECT CONDITIONS

DELETE PARAGRAPH BELOW IF ONLY HUMIDITY-TOLERANT ACOUSTICAL MATERIALS (I.E., "CLIMAPLUS" BY USG OR "HUMIGUARD" BY ARMSTRONG) ARE BEING SPECIFIED FOR THE PROJECT.

A. Do not install ceilings until ambient temperature and humidity conditions can be continuously maintained at values near those intended for final occupancy.

B. Building areas to receive ceiling shall be free of construction dust and debris.

PART 2 - PRODUCTS

THIS PART IS ORGANIZED BY PANEL AND SUSPENSION GRID TYPE. ALL POSSIBLE COMBINATIONS COULD NOT BE LISTED HERE, SO CONSULT CATALOGS FOR ADDITIONAL POSSIBILITIES WITH DIFFERENT PERFORMANCE, APPEARANCE OR COST.

FIRE-RATED CEILINGS ARE NOT INCLUDED IN THIS MASTER. CONSULT CATALOGS FOR PRODUCTS AND INSTALLATION REQUIREMENTS.

BELOW IS STANDARD PLAIN PANEL AND GRID SYSTEM.

2.1 STANDARD ACOUSTIC PANELS

A. Smooth surface, humidity-tolerant, mineral composition panels with washable surface; and as follows:

1. Surface: Perforated.
2. Edges: Rabbeted for 15/16-inch grid.

SELECT EDGE TYPE ABOVE OR BELOW.

3. Edges: Square.
4. Size: 24 inches by 24 inches by 5/8 inch thick.

SELECT PANEL SIZE ABOVE OR BELOW.

5. Size: 24 inches by 48 inches by 5/8 inch thick.
6. LR: Not less than .82.
7. NRC: Not less than .55.
8. CAC: Not less than 33.
9. Color: White.
10. Manufacturer/Style: Provide one of the following:
    a. "Fine Fissured"; Armstrong World Industries, Inc.
    b. "Fine Fissured"; CertainTeed Saint-Gobain.
    c. "Radar ClimaPlus"; U.S. Gypsum.

BELOW IS ROUTINE GRID FOR THIS PANEL TYPE - OTHERS ARE AVAILABLE - CONSULT CATALOGS.

11. Related Suspension Grid: Standard 15/16-inch Panel Suspension System in compliance with requirements of "Suspension Systems" Article of this Section.

2.2 PREMIUM ACOUSTIC PANELS

SELECTIONS BELOW HAVE APPEARANCE SIMILAR TO USG "FROST".

A. Smooth surface, humidity-tolerant, mineral composition panels with washable surface, and as follows:

1. Surface: Finely perforated.
2. Edges: Rabbeted and beveled for 9/16-inch grid.
3. Size: 24 inches by 24 inches by 3/4 inch thick.
4. Color: White.
5. LR: Not less than .85.
6. NRC: Not less than .70.
7. CAC: Not less than 35.
8. Manufacturer/Style: Provide one of the following:
    a. "Cirrus"; Armstrong World Industries, Inc.
    b. "Cashmere High NRC"; CertainTeed Saint-Gobain.
    c. "Eclipse ClimaPlus"; U.S. Gypsum.

THE ABOVE THREE PRODUCTS ARE WATER FELTED OR NODULAR. "FROST" IS SIMILAR IN APPEARANCE AND ACOUSTICAL PERFORMANCE, BUT IT IS A CAST/MOLDED PRODUCT (MORE DURABLE).

    d. "Frost ClimaPlus"; U.S. Gypsum.

BELOW IS ROUTINE GRID FOR THIS PANEL TYPE - OTHERS ARE AVAILABLE - CONSULT CATALOGS.

9. Related Suspension Grid: Narrow Bolt-Slot 9/16-inch Panel Suspension System in compliance with requirements of "Suspension Systems" Article of this Section.

SPECIALTY TRIM BELOW REFERS TO USG COMPASSO OR SIMILAR SYSTEMS. MODIFY TO SUIT PROJECT REQUIREMENTS OR DELETE IF NONE.

    a. Provide specialty trim systems where indicated on Drawings.

BELOW IS USG "MILLENA" PANEL AND ARMSTRONG COMPETITOR.

B. Smooth surface, humidity-tolerant, mineral composition panels with washable surface, and as follows:

1. Surface: Finely perforated.
2. Edges: Rabbeted and beveled for 9/16-inch grid.
3. Size: 24 inches by 24 inches by 3/4 inch thick.
4. LR: Not less than .85.
5. NRC: Not less than .70.
6. CAC: Not less than 35.
7. Color: White.
8. Manufacturer/Style: Provide one of the following:
   a. "Ultima"; Armstrong World Industries, Inc.
   b. "Symphony m"; CertainTeed Saint-Gobain.
   c. "Mars ClimaPlus"; U.S. Gypsum.

BELOW IS ROUTINE GRID FOR THIS PANEL TYPE - OTHERS ARE AVAILABLE - CONSULT CATALOGS.

9. Related Suspension Grid: Narrow Bolt-Slot 9/16-inch Panel Suspension System in compliance with requirements of "Suspension Systems" Article of this Section.

SPECIALTY TRIM BELOW REFERS TO USG COMPASSO OR SIMILAR SYSTEMS. MODIFY TO SUIT PROJECT REQUIREMENTS OR DELETE IF NONE.

   a. Provide specialty trim systems where indicated on Drawings.

USE PRODUCT BELOW ONLY WHEN ATTEMPTING TO MATCH EXISTING ACOUSTICAL PANELS. ARMSTRONG IS THE ONLY MFR. WHO IS MAKING THIS PRODUCT.

2.3 ROUTER-CUT PATTERNED PANELS

SPECIFIC PRODUCT NOT LISTED. DOZENS OF PATTERN VARIATIONS ARE AVAILABLE - CONSULT CATALOGS.

A. Smooth surface, router-cut pattern, mineral composition panels with washable surface; and as follows:

UPDATE BELOW BASED ON TILE SELECTED

1. Surface: Finely perforated.
2. Pattern: Linear scored with border.
3. Edges: Rabbeted for 9/16-inch grid.
4. Size: 24 inches by 24 inches by 3/4 inch thick.
5. LR: Not less than .85.
6. NRC: Not less than .70.
7. CAC: Not less than 35.
8. Color: White.
9. Manufacturer/Style:

INSERT SELECTED TILE MFR AND STYLE

10. Related Suspension Grid: Standard 9/16-inch Panel Suspension System in compliance with requirements of "Suspension Systems" Article of this Section.

2.4 GYPSUM CORE PANELS

BELOW IS USG GYPSUM CORE PANEL AND CELOTEX COMPETITOR (NO ARMSTRONG PRODUCT). THESE ARE SUITABLE FOR USE IN KITCHENS

AND SIMILAR APPLICATIONS, BUT NOT CLEAN ROOMS. DUST-FREE CLEAN ROOM PANELS ARE AVAILABLE FROM ALL THREE MFRS., BUT THEY ARE MUCH MORE EXPENSIVE.

A. Smooth surface, humidity resistant, gypsum core panels with vinyl facing, and as follows:

1. Composition: Gypsum board core with vinyl overlay.
2. Surface: Unperforated.
3. Edges: Square.
4. Size: 24 inches by 24 inches by 1/2 inch thick.

SELECT PANEL SIZE ABOVE OR BELOW.

5. Size: 24 inches by 48 inches by 1/2 inch thick.
6. LR: Not less than .77.
7. CAC: Not less than 35.
8. Color: White.
9. Manufacturer/Style: Provide one of the following vinyl-clad gypsum board panels:
   a. "Aquarock"; CertainTeed Saint-Gobain.
   b. "Gridstone"; National Gypsum Co.
   c. "Sheetrock Lay-In ClimaPlus Ceiling Panels"; U.S. Gypsum.
10. Related Suspension Grid: Moisture-Resistant 15/16-inch Panel Suspension System in compliance with requirements of "Suspension Systems" Article of this Section.

RETAIN OR DELETE BELOW TO SUIT PROJECT REQUIREMENTS SELECT PANEL SIZE ABOVE OR BELOW.

11. Related Accessories: Manufacturer's standard hold-down clips designed to prevent air pressure uplift of acoustic panels.

2.5 SUSPENSION SYSTEMS

A. Suspension Systems, General: As required to support acoustical units, electrical and mechanical fixtures and other components as indicated, including anchorages, hangers, runners, cross runners, splines, clips, moldings, fasteners and other members, devices and accessories. Comply with requirements of ASTM C 635.

1. Hanger Wire: Not less than 12 gage (0.106 inch) galvanized steel.
2. Type: Exposed Direct-Hung Steel Suspension System
3. Structural Class: Medium-Duty System.

BELOW IS STANDARD WIDE FACE, STEEL CAPPED PRODUCT.

B. Standard 15/16-inch Panel Suspension System: Suspension system with exposed faces painted.

1. Face Width: 15/16-inch wide.
2. Product/Manufacturer: Provide the following:
   a. "Prelude XL 15/16": Armstrong World Industries, Inc.
   b. ”Classic Stab System"; CertainTeed Saint-Gobain.
   c. "Donn DX"; U.S. Gypsum.

BELOW IS NARROW FACE, STEEL CAPPED PRODUCT. CONSIDER SPECIALLY SHAPED EDGE ANGLES - CONSULT CATALOGS FOR RANGE OF POSSIBILITIES.

C. Standard 9/16-inch Panel Suspension System: Suspension system with exposed faces painted.

1. Face Width: 9/16-inch wide.
2. Product/Manufacturer: Provide the following:
   a. "Suprafine 9/16"; Armstrong World Industries, Inc.
   b. "Elite Narrow Stab"; CertainTeed Saint-Gobain.
   c. "Centricitee DXT"; U.S. Gypsum

BELOW IS STEEL SLOT-TYPE GRID. SLOT WIDTHS VARY AND COLOR INSERTS MAY BE ADDED. CONSULT CATALOGS FOR FULL EXTENT OF POSSIBILITES.

D. Narrow Bolt-Slot 9/16-inch Panel Suspension System: Suspension system with exposed faces painted and slotted.

1. Face Width: 9/16-inch wide with 1/8-inch wide reveal.
2. Product/Manufacturer: Provide the following:
   a. "Silhouette XL-1/8 Reveal 9/16 Bolt Slot"; Armstrong World Industries, Inc.
   b. "SmoothLine Bolt Slot System"; CertainTeed Saint-Gobain.
   c. "Fine-Line 1/8"; U.S. Gypsum

BELOW IS FOR GYPSUM CORE PANELS IN SEMI-WET LOCATIONS (SUCH AS ANIMAL FACILITIES). ALL-ALUMINUM SYSTEMS AND PVC SYSTEMS ARE ALSO AVAILABLE.

E. Moisture-Resistant 15/16-inch Panel Suspension System: Suspension system with G60 hot-dip galvanized exposed faces with rolled, painted, aluminum caps.

1. Face Width: 15/16-inch wide.
2. Product/Manufacturer: Provide the following:
   a. "Prelude Plus XL Fireguard"; Armstrong World Industries, Inc.
   b. "Protectone Aluminum Fire-Rated Capped System"; CertainTeed Saint-Gobain.
   c. "Donn ZXLA"; U.S. Gypsum

2.6 SPECIALTY TRIM SYSTEMS

BELOW IS CUSTOM "FLOATING" APPEARANCE TRIM SYSTEM.

A. Custom Exposed Edge and Perimeter Trim System: Manufacturer's custom designed, painted steel trim system for fully exposed edge conditions; integrated with manufacturer's suspension system to create a free-floating installed appearance. Provide units of depth with 9/16 inch horizontal legs and with hems for attachment to suspension system.

1. Depth: 4-inches unless otherwise indicated.
2. Product/Manufacturer: Provide the following:
   a. "Axiom"; Armstrong World Industries, Inc.
   b. "Infinity"; Chicago Metallic Corp.
   c. "COMPASSO"; U.S. Gypsum

PART 3 - EXECUTION

3.1 INSTALLATION

A. Comply with ASTM C636 and seismic design requirements indicated, per manufacturer's written instructions and CISCA's "Ceiling Systems Handbook."

B. Layout: Balance ceiling borders on opposite sides, using more-than-half width acoustical units, except where otherwise dimensioned or indicated.

1. Tolerance: 1/8 inch in 12 feet level tolerance.
2. Pattern Direction: One-way, align joints.

C. Suspension System: Secure to building structure, free from contact with objects within the ceiling plenum, with hangers spaced 48 inches on center along supported members; provide hangers not more than 8 inches from ends of each member.

1. Where interference with ducts or suspended equipment prevents direct connection of suspension elements to building structure, provide steel channel members (Unistrut or equivalent) hung from structural members with threaded rods with appropriate fasteners; and adequately sized for suspension system capacity. Secure suspension system to steel channels. Connection to ductwork or equipment is not permitted.
2. Do not fasten ceiling suspension members to metal roof deck.

INCLUDE BELOW FOR RABBETED PANELS.

D. Rabbeted Panels: Rabbet panel edges that have been field cut to fit non-modular suspension grid shapes at room perimeter, columns, and similar obstructions. Use router or other factory-approved rabbeting method.

E. Edge Moldings: Secure to substrate with screw anchors spaced 16 inch on center. Set with concealed bead of acoustical sealant. Miter corner joints. Cope exposed flanges of intersecting suspension members for flush intersections.

DELETE ARTICLE BELOW IF NO HOLD-DOWN CLIPS REQUIRED FOR FIRE-RESISTIVE CEILINGS OR AIR-PRESSURE-RESISTANT CEILINGS.

F. Provide hold-down clips at each acoustic panel in systems indicated for Animal Facility application. Install in accordance with manufacturer's recommendations for an air pressure uplift-resistant installation.

DELETE ARTICLE BELOW IF NO SPECIALTY TRIM INCLUDED.

3.2 SPECIALTY TRIM INSTALLATION

A. Exposed Edge and Perimeter Trim System: Install units in accordance with manufacturer's printed instructions for specific Project application.

3.3 CLEANING AND REPAIR

A. Clean suspension grid and panels. Remove and replace panels and grid that are defective, or that have been damaged.

B. Touch-up paint field-cut edges of factory painted tile that are exposed to view in finished installation, including horizontal and vertical surfaces at perimeter of ceilings where panels are cut for rabbeted edge molding.

END OF SECTION 095100

UNIVERSITY OF MICHIGAN
ARCHITECTURE, ENGINEERING AND CONSTRUCTION

ARCHITECTURE & ENGINEERING
326 East Hoover, Mail Stop B
Ann Arbor, MI 48109-1002
Phone: 734-764-3414
Fax: 734-936-3334

BuildingName
The Description of the Project
P00000000 0000

SPECIFICATION DIVISION 9

NUMBER SECTION DESCRIPTION

DIVISION 09 FINISHES
SECTION 096466 - WOOD ATHLETIC FLOORING

END OF CONTENTS TABLE

DIVISION 09 FINISHES
SECTION 096466 - WOOD ATHLETIC FLOORING

PART 1 - GENERAL

PRODUCTS AND SYSTEMS DESCRIBED IN THIS SECTION ARE OBSOLETE. IT IS RETAINED ONLY AS A "MODEL" TO ASSIST IN WRITING AN APPROPRIATE SPECIFICATION. CONSIDER OBTAINING THE AIA MASTERSPEC SUPPLEMENTAL SECTION OF THE SAME SECTION NUMBER AND NAME.

1.1 SUMMARY

A. Extent of gymnasium floor is indicated on Drawings.

B. Types of gymnasium floors include:

1. Maple strip gym flooring.

1.2 SUBMITTALS

A. Product Data: Submit mfr's specifications and installation instructions for each gymnasium flooring system. Include instructions for handling, moisture protection, anchorage finishing protection and maintenance. Indicate by copy of transmittal that Installer has received a copy of each instruction.

INCLUDE BELOW FOR ALL PROJECTS.

B. Affidavits of Compliance to be included in final inspection manual:

1. Provide manufacturer's letter of certification showing compliance with finish testing and classification requirements referenced by current adopted NFPA 101 "Life Safety Code".
2. Letter shall include project number, project name, and building name.

1.3 QUALITY ASSURANCE

A. Comply with Maple Flooring Manufacturer's Association (MFMA) standards and recommendations for maple flooring.

1.4 DELIVERY, STORAGE AND HANDLING

A. Deliver and store wood materials after wet operations in building are complete, heating and ventilating equipment is operational, and temperature and humidity conditions have stabilized.

1.5 WARRANTY

A. Provide 3 year warranty covering the following, in addition to mfr's standard 1 year warranty for finished wood flooring and associated work:

1. Repair or replace flooring which shrinks, cracks, warps, or otherwise deteriorate excessively, or which buckles, delaminates, or breaks anchorage or bond with substrate.

PART 2 - PRODUCTS

2.1 ACCEPTABLE MANUFACTURERS

A. Manufacturers/Systems: Subject to compliance with requirements of this Section, provide products of one of the following:

AGA Inc.: Duracushion I.
Connor Forest Industries: Rezill-Aire.
Horner Flooring Co.: Thrust-A-Cushion Panel System.
Robbins Inc.: Permacushion II Panel System.
Superior Floor Co: Super-Aire System."

2.2 MATERIALS AND ACCESSORIES

A. Vapor Barrier: 6 mil polyethylene.

B. Subfloor: 1/2 inch by 4 feet by 8 feet C-D exterior grade plywood.

C. Resilient Mounting Pads: Mfr's standard 3/8 inch by 2-1/4 inch by 3 inch PVC.

D. Wood Flooring: Tongue and grooved and end matched; kiln dried; MFMA grade marked and stamped; and as follows:

1. Species: Northern Hard Maple (acer saccharum).
2. Size: 33/32 inches thick by 1-1/2 inch wide.
3. Grade: Second and Better.
4. Grain: Flat.

E. Molding and Base: Manufacturer's standard ventilating, coved, rubber base with pre-molded outside and inside corners.

1. Color: Black.
2. Size: 3 inches by 4 inches.

F. Expansion Joint Covers: One of the following recessed, serrated (fluted), aluminum expansion joint covers for 2" wide joints:

Balco Inc.: Model AFWS-1-2m
Metalines Inc.: Model 1425
MM Systems Corp.: Model X-A2MV

G. Finish: Polyurethane sealer and finish recommended by flooring mfr.

1. Game Lines: Enamel paint recommended by flooring mfr, and compatible with floor finish. Colors to selected from paint mfr's standard color range.

PART 3 - EXECUTION

3.1 EXAMINATION

A. Examine concrete slab substrate for compliance with mfr's tolerance, dryness and cleanliness requirements. Allow excess moisture to dry before proceeding with installation.

3.2 PREPARATION

A. Clean slab of construction debris, oil, grease and other substances determined by mfr to have a deleterious effect on installation

1. Do not begin installation operations before completion of adjacent masonry work, and overhead mechanical, electrical, and painting work have been completed.

3.3 INSTALLATION

A. Vapor Barrier: Lap joints 4 inches and cement with cold asphalt.

B. Flooring System: In general, install flooring system components in strict accordance with mfr's directions. Install self-storing volley ball post hatches and frames (under Alternate No. 6).

C. Sanding: Machine sand with a progression of coarse, medium and fine papers to produce a smooth, even and uniform surface.

1. After sanding operations are completed, remove dust from entire surface by vacuum or other method.

D. Finishing: Apply 2 coats sealer and 2 finish coats at manufacturer's recommended rate, but no thinner than 500 square feet per gallon. Buff and clean floor between each coat.

1. Game Lines: Paint basketball and volley ball game lines, and center-court and perimeter graphics. Comply with official NCAA game line rules, and as indicated on Drawings.

E. Base Installation: Install vent cove base and expansion joint covers as indicated, and to comply with mfr's recommendations.

3.4 CLEANING AND PROTECTION

A. Clean gym flooring surfaces at the completion of construction operations, in strict accordance with manufacturer's directions.

B. Protect finished installation from damage caused by continuing building construction operations.

C. Repair damaged or defective surfaces to the satisfaction of the Architect, or remove and replace damaged or defective surface as directed by the Architect.

END OF SECTION 096466

UNIVERSITY OF MICHIGAN
ARCHITECTURE, ENGINEERING AND CONSTRUCTION

ARCHITECTURE & ENGINEERING
326 East Hoover, Mail Stop B
Ann Arbor, MI 48109-1002
Phone: 734-764-3414
Fax: 734-936-3334

BuildingName
The Description of the Project
P00000000 0000

SPECIFICATION DIVISION 9

NUMBER SECTION DESCRIPTION

DIVISION 09 FINISHES
SECTION 096500 - RESILIENT FLOORING

END OF CONTENTS TABLE

DIVISION 09 FINISHES
SECTION 096500 - RESILIENT FLOORING

PART 1 - GENERAL

1.1 SUMMARY

A. Extent of resilient flooring and accessories is indicated on Drawings and schedules.

B. Types of resilient flooring and accessories include the following:

EDIT BELOW TO SUIT PROJECT.

1. Vinyl composition tile.
2. Sheet vinyl flooring.
3. Rubber stair treads.
4. Wall base.

1.2 SUBMITTALS

A. Product Data: Manufacturer's literature and installation instructions.

B. Samples for Initial Selection: Submit sample of each type, color and pattern of resilient flooring and accessories.

INCLUDE BELOW FOR ALL PROJECTS.

C. Affidavits of Compliance to be included in final inspection manual:

1. Provide manufacturer's letter of certification showing compliance with finish testing and classification requirements referenced by current adopted NFPA 101 "Life Safety Code".
2. Letter shall include project number, project name, and building name.

PART 2 - PRODUCTS

WARNING: CHECK SAMPLES FOR SUITABILITY BEFORE SELECTING ANY OF THE PRODUCTS LISTED BELOW.

2.1 VINYL COMPOSITION TILE

BELOW DESCRIBES STANDARD VCT - ADD AMTICO, AZROCK, OR KENTILE WHERE "THRU-CHIP" PERFORMANCE (DURABILITY) IS NOT REQUIRED.

A. Vinyl Composition Tile: ASTM F 1066 Composition 1, Class 2; 12-inch by 12-inch by 1/8-inch thick.

1. Vinyl Composition Tile Manufacturer/Style: Subject to compliance with requirements provide one of the following:

CONSULT SAMPLES FOR COLOR/PATTERN SUITABILITY FOR THE PROJECT. SELECTION BELOW IS MINIMAL AND DOES NOT REPRESENT FULL AVAILABLE RANGE OF TILE.

a. "Imperial Excelon"; Armstrong, Inc.
b. "Inspirations"; Mannington, Inc.
c. "Expressions"; Tarkett, Inc..

RETAIN BELOW UNLESS COLOR AND PATTERN HAS BEEN PRE-SELECTED AND INCLUDED WITH PRODUCT DESCRIPTION ABOVE.

2. Color/Pattern: Selected from manufacturer's standard range for products indicated.

BELOW DESCRIBES STANDARD SHEET VINYL WITH BACKING. ALL LISTED PRODUCTS BELOW ARE ACCEPTABLE TO THE UNIVERSITY'S MAINTENANCE DEPT. MULTI-LAYERED SOLID VINYLS (SMARAGD AND ARMSTRONG TRANSLATIONS) AND LINOLEUM HAVE NOT BEEN APPROVED.

2.2 VINYL SHEET FLOORING

BACKED PRODUCTS ARE GENERALLY LESS EXPENSIVE AND MAY BE MORE SUITABLE FOR APPLICATION OVER SLABS-ON-GRADE.

A. Vinyl Sheet with Backing: Vinyl sheet with pattern and color extending through full thickness, complying with FS L-F-475A, Type II, Grade A. Manufacturer's standard width rolls.

1. Wear Layer Thickness: 0.050-inch.
2. Overall Thickness: Not less than 0.080-inch.
3. Vinyl Sheet Manufacturer/Style: Subject to compliance with requirements, provide one of the following:
   a. "Classic Corlon"; Armstrong, Inc.

ABOVE IS STANDARD VINYL SUITABLE FOR CHEMICALLY WELDED SEAMING - BELOW HAS CHEMICAL RESISTANCE PERFORMANCE SIMILAR TO REGULAR MEDINTECH BUT WITH BACKING AND CAN HAVE EITHER CHEMICAL- OR HEAT-WELDED SEAMS.

b. "Medintech Tandem"; Armstrong, Inc.

THE PRODUCTS BELOW MAY HAVE EITHER CHEMICAL- OR HEAT-WELDED SEAMS, BUT DO NOT HAVE MEDINTECH'S CHEMICAL RESISTANCE. CHECK SUITABILITY FOR USE ON SLABS ON GRADE. CHECK SAMPLES TO ENSURE DESIRABILITY OF COLORS/PATTERNS.

c. "Possibilities"; Armstrong, Inc.
d. "Fields"; Mannington, Inc.
e. "Images"; Tarkett, Inc.

RETAIN BELOW UNLESS COLOR AND PATTERN HAS BEEN PRE-SELECTED AND INCLUDED WITH PRODUCT DESCRIPTION ABOVE.

4. Color/Pattern: Selected from manufacturer's standard range for products indicated.

BELOW DESCRIBES HOMOGENOUS SHEET VINYL WITH HEAT WELDABLE SEAMS FOR "SEAMLESS" FLOOR. THESE FLOORS ARE MORE DURABLE THAN THE BACKED TYPE. IN ADDITION, MEDINTECH HAS PROVEN RELATIVELY STAIN AND CHEMICAL RESISTANT.

B. Vinyl Sheet Without Backing: Vinyl sheet with pattern and color extending through full thickness, complying with ASTM E 84 (75 or less), and ASTM E 662 (NBS Smoke 450 or less). Manufacturer's standard width rolls.

1. Thickness: 0.080-inch.
2. Vinyl Sheet Manufacturer/Style: Subject to compliance with requirements, provide one of the following:
   a. "Medintech"; Armstrong, Inc.

BELOW IS CLAIMED BY MANUFACTURER TO BE EQUIVALENT TO MEDINTECH FOR CHEMICAL RESISTANCE. SAMPLES HAVE NOT BEEN CHECKED BY UM. SELECT WITH CAUTION.

   b. "Biospec"; Mannington Inc.
   c. "Expressions" "Eminent/Optima/Collage Optima"; Tarkett, Inc.

RETAIN BELOW UNLESS COLOR AND PATTERN HAS BEEN PRE-SELECTED AND INCLUDED WITH PRODUCT DESCRIPTION ABOVE.

3. Color/Pattern: Selected from manufacturer's standard range for products indicated.

2.3 RUBBER STAIR TREAD

BELOW DESCRIBES STANDARD RUBBER STAIR TREAD UNITS.

A. Preformed Rubber Stair Treads: Homogenous vulcanized rubber composition units complying with Fed. Spec. RR-T-650D, Composition A, Type 2; with raised, slip-resistant pattern on tread surface, reinforced nose, of manufacturer's standard thickness for indicated pattern, and as follows:

SELECT ONE OF THE FOLLOWING.

1. Pattern: Raised disk.
2. Pattern: Straight ribs.
3. Pattern: Diagonal grid (diamond).

BELOW ARE EXAMPLES ONLY. CHECK SAMPLES FOR WIDER SELECTION. AVOID BLACK STAIR TREAD (LIGHTING PROBLEMS UNDER EMERGENCY FIXTURE OPERATION). IT IS ALSO BEST TO AVOID WHITE AND BLACK TREAD DUE TO CLEANING PROBLEMS.

4. Color: Gray.
5. Color: Tan.
6. Color: Selected from manufacturer's standard range.

DELETE BELOW IF NOT DESIRED. ADDITIONAL COST MAY NOT BE JUSTIFIED IN TYPICAL SERVICE STAIRS.

7. Provide 1/8-inch gage coved rubber risers matching tread composition and color.
8. Manufacturers: Subject to compliance with requirements, one of the following:
   Armstrong.
   Flexco.
   Musson.
   Johnsonite.
   Nora
   RCA.

Roppe.
VPI.

2.4 RESILIENT WALL BASE

BELOW DESCRIBES 100% VULCANIZED RUBBER COVE BASE - STANDARD FOR MOST UNIVERSITY PROJECTS AND ALL MED SCHOOL PROJECTS. COLOR IS HOMOGENOUS

A. Rubber Base: ASTM F 1861, Type TS (rubber, vulcanized thermoset), Group I (solid, homogeneous).

SELECT STYLE FROM OPTIONS BELOW. TYPICALLY SELECT "COVE (BASE WITH TOE)"

1. Style: Cove (base with toe).
2. Style: Straight (flat or toeless).
3. Style: Butt to (fit-to-floor).
4. Minimum Thickness: 0.125 inch.

SELECT HEIGHT FROM OPTIONS BELOW. 4 INCHES IS TYPICAL. OTHER OPTIONS ARE AVAILABLE.

5. Height: 2-1/2 inches.
6. Height: 4 inches.
7. Height: 6 inches.

BELOW ARE EXAMPLES ONLY. CHECK SAMPLES FOR WIDER SELECTION.

8. Color: Black.
9. Color: Dark brown.
10. Color: Selected from manufacturer's standard range.
11. Furnish cove base in continuous length rolls.

USUALLY RETAIN ABOVE AND DELETE BELOW, UNLESS COST AND DELIVERY TIME IS PARAMOUNT.

12. Furnish cove base in standard 6-foot lengths.

DELETE BELOW IF NOT DESIRED.

13. Provide matching end stops and preformed corner units.
14. Manufacturers: Subject to compliance with requirements, one of the following:
    Burke Mercer.
    Flexco.
    Roppe.

BELOW DESCRIBES THERMOPLASTIC RUBBER COVE BASE (RUBBER / VINYL BLEND). DISADVANTAGES INCLUDE DECREASED DURABILITY AND VISIBILITY OF SCRATCHES. ADVANTAGES INCLUDE MORE MRFS, SLIGHTLY LOWER COST AND WIDER COLOR SELECTION.

TYPICALLY CHOOSE GROUP II, GROUP I IS NOT AVAILABLE IN ALL LISTED MFRS.

B. Rubber Base: ASTM F 1861, Type TP (rubber, thermoplastic), Group I (solid, homogeneous) or Group II (layered).

SELECT STYLE FROM OPTIONS BELOW. TYPICALLY SELECT "COVE (BASE WITH TOE)"

1. Style: Cove (base with toe).

2. Style: Straight (flat or toeless).
3. Style: Butt to (fit-to-floor).
4. Minimum Thickness: 0.125 inch.

SELECT HEIGHT FROM OPTIONS BELOW. 4 INCHES IS TYPICAL. OTHER OPTIONS ARE AVAILABLE.

5. Height: 2-1/2 inches.
6. Height: 4 inches.
7. Height: 6 inches.

BELOW ARE EXAMPLES ONLY. CHECK SAMPLES FOR WIDER SELECTION.

8. Color: Black.
9. Color: Dark brown.
10. Color: Selected from manufacturer's standard range.
11. Furnish cove base in continuous length rolls.

USUALLY RETAIN ABOVE AND DELETE BELOW, UNLESS COST AND DELIVERY TIME IS PARAMOUNT.

12. Furnish cove base in standard 6-foot lengths.

DELETE BELOW IF NOT DESIRED.

13. Provide matching end stops and preformed corner units.
14. Manufacturers: Subject to compliance with requirements, one of the following:
    Armstrong.
    Burke Mercer.
    Flexco.
    Johnsonine.
    Nafco by Tarkett.
    Roppe.
    VPI.

BELOW DESCRIBES STANDARD VINYL BASE. DRAWBACKS INCLUDE REDUCED DURABILITY. COLOR IS NOT HOMOGENOUS. DISADVANTAGES INCLUDE DECREASED DURABILITY AND VISIBILITY OF SCRATCHES. ADVANTAGES INCLUDE MORE MRFS, LOWER COST AND WIDER COLOR SELECTION.

C. Vinyl Wall Base: ASTM F 1861, Type TV (vinyl, thermosplastic), Group II (layered).

SELECT STYLE FROM OPTIONS BELOW. TYPICALLY SELECT "COVE (BASE WITH TOE)"

1. Style: Cove (base with toe).
2. Style: Straight (flat or toeless).
3. Style: Butt to (fit-to-floor).
4. Minimum Thickness: 0.125 inch.

SELECT HEIGHT FROM OPTIONS BELOW. 4 INCHES IS TYPICAL. OTHER OPTIONS ARE AVAILABLE.

5. Height: 2-1/2 inches.
6. Height: 4 inches.
7. Height: 6 inches.

BELOW ARE EXAMPLES ONLY. CHECK SAMPLES FOR WIDER SELECTION.

8. Color: Black.
9. Color: Dark brown.

10. Color: Selected from manufacturer's standard range.
11. Furnish cove base in continuous length rolls.

USUALLY RETAIN ABOVE AND DELETE BELOW, UNLESS COST AND DELIVERY TIME IS PARAMOUNT.

12. Furnish cove base in standard 6-foot lengths.

DELETE BELOW IF NOT DESIRED.

13. Provide matching end stops and preformed corner units.
14. Manufacturers: Subject to compliance with requirements, one of the following:
    Armstrong.
    Burke Mercer.
    Flexco.
    Johnsonine.
    Nafco by Tarkett.
    Roppe.
    VPI.

INCLUDE BELOW FOR INTEGRAL COVE BASE ON WELDABLE SHEET VINYL FLOORS.

D. Integral Cove Base Accessories: Provide the following accessory items for integral sheet vinyl cove base installations.

1. Cap Trim: Provide aluminum or stainless steel flash-cove capping trim at top edge of integral base.

BELOW OPTIONAL - USUALLY DELETE. CORNERS COMMONLY FORMED FROM FLOORING MATERIALS.

2. Corner Trim: Provide aluminum or stainless steel corner trim at inside and outside corners of flash-coving.

USUALLY RETAIN BELOW FOR INTEGRAL COVED BASE APPLICATIONS.

3. Cove Stick: At each wall/floor intersection, provide wood or plastic cove stick materials manufactured specifically for use as back-up for flash-coving.

2.5 ACCESSORIES

A. Transition (Reducer) Strips: Provide units fabricated of solid rubber or vinyl as required to match specified topset cove base materials.

B. Adhesives: Provide Manufacturer's recommended non-asbestos-containing adhesive for each type of flooring, wall base and substrate indicated.

DELETE THE FOLLOWING IF NO HEAT WELDED SEAMS.

C. Welding Rods: Provide manufacturer's welding rods for heat-welded seam installations.

1. Color: Selected from manufacturer's standard range to coordinate with flooring.

BELOW AVAILABLE FROM ARMSTRONG FOR MEDINTECH PRODUCTS.

2. Color: Selected from manufacturer's patterned, premium grade rods designed to blend with color and pattern of flooring for a near-invisible joint.

PART 3 - EXECUTION

3.1 EXAMINATION

A. In presence of Installer, inspect substrate conditions for compliance with resilient flooring manufacturer's installation recommendations. Report, in writing, deleterious conditions to Owner's Representative.

USUALLY INCLUDE BELOW.

1. Obtain Architect's written approval before beginning installation.

3.2 PREPARATION

A. In general: Prepare substrates as required to receive new materials. Remove dirt and debris from substrate. Adhesive removal is included in Division 2 Section "Selective Demolition."

B. Where uneven floor levels or holes occur, fill, patch, and provide underlayment as required to level surface prior to installation of finished floor material. Underlayment may be latex cement as applicable.

REQUIREMENT BELOW IS INTENDED TO LIMIT CLAIMS FOR EXTRAS. INCREASE OR DECREASE AREA PERCENT BASED ON YOUR JUDGMENT, OR DELETE ENTIRELY FOR NEW CONCRETE FLOORS.

1. Patching is required for approximately [not less than] 20 percent of the gross floor area of the Project.

INCLUDE BELOW FOR LARGE AREAS OF PATCHING OR LEVELING. COORDINATE WITH "CONCRETE FLOOR UNDERLAYMENT" SECTION.

2. Floor patching and leveling is included in Division 3 Section "Hydraulic Cement Underlayment."

C. Clean floors and apply substrate primer (if recommended by flooring manufacturer) in accordance with flooring manufacturer's instructions.

3.3 INSTALLATION, GENERAL

A. Comply with flooring manufacturer's recommendations for type(s) of materials, project conditions, and intended use.

B. Place resilient flooring continuously under locations of the following:

MODIFY THE FOLLOWING TO SUIT PROJECT.

1. Movable partition systems.
2. Laboratory casework.

INCLUDE BELOW FOR ALL MEDICAL SCHOOL PROJECTS.

C. Apply continuous bead of sealant along perimeter edge of installation and around all floor penetrations prior to installing wall base.

3.4 SHEET VINYL INSTALLATION

INCLUDE BELOW FOR STANDARD SHEET VINYL PRODUCTS - CHEMICAL WELDING IS NOT IMPLY SEAMLESS FLOORING.

A. Chemically Welded Vinyl Sheet: Manufacturer's standard chemical joint adhesive system.

DELETE ABOVE AND INCLUDE BELOW FOR HEAT-WELDED "SEAMLESS" FLOORING ONLY.

B. Vinyl Sheet with Heat Welded Seams: Manufacturer's standard seam sealing system with seam edges heated and fused with specifically compounded vinyl welding rods, resulting in a seamless installation.

3.5 TILE INSTALLATION

A. Lay out tiles from center marks established with principal walls, discounting minor offsets, so tiles at opposite edges of room are of equal width. Adjust as necessary to avoid using cut widths that equal less than one-half of a tile at perimeter.

1. Lay tiles square with room axis, unless otherwise indicated.

DELETE SUBPARA ABOVE OR BELOW, OR REVISE IF FLOOR GEOMETRY OR PATTERN DICTATES ANOTHER RELATIONSHIP OF TILES WITH ROOM AXIS.

2. Lay tiles at a 45-degree angle with room axis, unless otherwise indicated.

B. Match tiles for color and pattern by selecting tiles from cartons in the same sequence as manufactured and packaged, if so numbered. Cut tiles neatly around all fixtures. Discard broken, cracked, chipped, or deformed tiles.

RETAIN ONE SUBPARA BELOW OR INSERT REQUIREMENTS TO SUIT PROJECT.

1. Lay tiles with grain running in one direction.
2. Lay tiles in basket-weave pattern with grain direction alternating in adjacent tiles.
3. Lay tiles in pattern of colors and sizes indicated on Drawings.

IF ANY BUILT-IN ITEMS ARE REQUIRED TO BE SET ON TOP OF TILE, INDICATE ON DRAWINGS AND REVISE PARA BELOW ACCORDINGLY.

C. Scribe, cut, and fit tiles to butt neatly and tightly to vertical surfaces and permanent fixtures, including built-in furniture, cabinets, pipes, outlets, edgings, door frames, thresholds, and nosings.

D. Extend tiles into toe spaces, door reveals, closets, and similar openings.

E. Maintain reference markers, holes, and openings that are in place or marked for future cutting by repeating on finish flooring as marked on subfloor. Use chalk or other nonpermanent, nonstaining marking device.

DELETE PARA BELOW IF NO COVERS.

F. Install tiles on covers for telephone and electrical ducts, and similar items in finished floor areas. Maintain overall continuity of color and pattern with pieces of flooring installed on covers. Tightly adhere edges to perimeter of floor around covers and to covers.

REVISE PARA BELOW IF OTHER THAN FULL-SPREAD ADHESIVE METHOD IS RECOMMENDED BY TILE MFR FOR SUBSTRATE AND TILE PRODUCTS SELECTED.

G. Adhere tiles to flooring substrates using a full spread of adhesive applied to substrate to comply with tile manufacturer's written instructions, including those for trowel notching, adhesive mixing, and adhesive open and working times.

1. Provide completed installation without open cracks, voids, raising and puckering at joints, telegraphing of adhesive spreader marks, and other surface imperfections.

DELETE BELOW IF ROLLING IS NOT REQUIRED FOR PRODUCTS SELECTED.

H. Hand roll tiles according to tile manufacturer's written instructions.

3.6 WALL BASE INSTALLATION

COORDINATE THE FOLLOWING WITH LABORATORY CASEWORK SPECIFICATIONS, CONCERNING PROVISION OF BASE ON CASEWORK.

A. Apply wall base in lengths as long as practicable to walls, columns, and all permanent fixtures and where indicated. Mitered outside corners not acceptable.

RETAIN BELOW WITH CASEWORK.

B. Apply base to fixed cabinetry as follows:

1. Base cabinet toe spaces.
2. Exposed sides of base cabinets.
3. Filler and closure panels extending to floor.

DELETE ABOVE AND INCLUDE BELOW FOR SHEET VINYL FLOORS WITH INTEGRAL COVE BASE.

C. Form flooring material into continuous cove base at walls, columns, and permanent fixtures (including fixed casework) and where indicated. Heat weld all seams.

1. Provide metal cap trim at exposed edges of base, and where base is formed into outside corners. Mitered and welded outside corners without metal trim are not acceptable.
2. Apply base to fixed laboratory cabinetry as follows:
   a. Base cabinet toe spaces.

b. Exposed sides of base cabinets.
c. Filler and closure panels extending to floor.

D. On masonry or other irregular surfaces, fill voids behind base and along top edge with manufacturer's recommended adhesive filler.

3.7 CLEANING

A. Clean floors and accessories after installation in accordance with flooring manufacturer's instructions.

1. Do not polish floors.

END OF SECTION 096500

UNIVERSITY OF MICHIGAN
ARCHITECTURE, ENGINEERING AND CONSTRUCTION

ARCHITECTURE & ENGINEERING
326 East Hoover, Mail Stop B
Ann Arbor, MI 48109-1002
Phone: 734-764-3414
Fax: 734-936-3334

BuildingName
The Description of the Project
P00000000 0000

SPECIFICATION DIVISION 9

NUMBER SECTION DESCRIPTION

DIVISION 09 FINISHES
SECTION 096723 - RESINOUS FLOORING

END OF CONTENTS TABLE

DIVISION 09 FINISHES
SECTION 096723 - RESINOUS FLOORING

THIS SECTION IS LIMITED TO COMMERCIAL-TYPE HIGH-TEMPERATURE AND CHEMICALLY-REISTANT SYSTEM. CONSIDER USING AIA MASTERSPEC SECTION OF THE SAME NAME AND NUMBER FOR DECORATIVE FLOORS, FACTORY FLOORS AND OTHER SIMILAR APPLICATIONS.

PART 1 - GENERAL

1.1 SUMMARY

A. Extent of seamless, resinous flooring is shown and scheduled on Drawings.

B. Type of seamless resinous flooring is high-build, temperature-resistant, chemically resistant, trowel-down epoxy mortar type with compatible finish coat.

1.2 SUBMITTALS

A. Manufacturer's product literature indicating compliance with requirements.

B. Installation instructions for each primary product and accessory.

C. Samples for Initial Selection: Submit 4-inch square sample of actual flooring material in color proposed to match indicated color.

D. Samples for Verification: Submit 4-inch square sample of actual flooring material with final approved color adjustments.

E. Qualification Data for Individuals and Firms listed in Quality Assurance Article.

INCLUDE BELOW FOR ALL PROJECTS.

F. Affidavits of Compliance to be included in final inspection manual:

1. Provide manufacturer's letter of certification showing compliance with finish testing and classification requirements referenced by current adopted NFPA 101 "Life Safety Code".
2. Letter shall include project number, project name, and building name.

1.3 QUALITY ASSURANCE

A. Installer Qualifications: Installer having not less than 5 years of experience installing comparable flooring systems; and approved by resinous flooring manufacturer for application indicated.

B. Design Criteria: The Project has been designed using Stonclad HT/Stonkote HT4 by Stonhard, Inc. Fully equivalent products of other listed, approved manufacturers will be considered, provided deviations in product qualities are minor and do not change the performance of the flooring system as judged by the Architect.

PART 2 - PRODUCTS

2.1 MANUFACTURER

A. Manufacturer: Subject to compliance with requirements, provide products of one of the following:

Dex-O-Tex; Crossfield Products Co.
Epoxy-Tech, Inc.
Mastertop; Master Builders Technologies Ltd.
Stonclad; Stonhard Inc. USA

2.2 SEAMLESS RESINOUS FLOORING

A. Mortar: Seamless, built-up, troweled-down, thermally- and chemically-resistant three-component epoxy resin-based flooring system. Provide mortar materials with performance equal or better than the following values for each indicated test method:

1. Compressive Strength: 11,500 psi at 7 days; ASTM C 579.
2. Tensile Strength: 2,200 psi; ASTM C 307.
3. Flexural Strength: 5,000 psi; ASTM D 580.
4. Flexural Modulus of Elasticity: 17,000,000 psi; ASTM D 790..
5. Hardness: 87-90; ASTM D2240/Shore D Durometer.
6. Bond Strength: Greater than 400 psi (100 percent concrete failure); ACI Committee 503/PP.1139-1141.
7. Indentation: None; MIL-D-3134F.
8. Abrasion Resistance:0.18 gm max. weight loss; ASTM D 4060, CS-17 wheel.
9. Flammability: Self-extinguishing, extent of burning not more than 0.25 inches; ASTM D 635,
10. Thermal Coefficient of Linear Expansion: 0.00002-in/in deg C; ASTM E 831.
11. Water Absorption: 0.2 percent; ASTM C 413.
12. Heat Resistance Limitation: 200 deg F for continuous exposure; 250 deg F for intermittent exposures.

B. Finish Coating: Thermally- and chemically-resistant 100 percent solids, two-component epoxy resin coating compounded to compliment the performance of the mortar material.

1. Temperature Limitations: Not less than that specified for mortar material.
2. Chemical-resistance: Not less than that specified for mortar material.
3. Color: Equivalent to Stonhard, Inc. "Brick Red."

2.3 ACCESSORIES

A. Primer: Two-component epoxy resin primer compounded for the application indicated.

B. Cove Cap: Manufacturer's standard cove top cap to provide a neat, level, and durable finished cove installation.

PART 3 - EXECUTION

3.1 PREPARATION

A. Prepare substrates to condition recommended by seamless resinous flooring manufacturer for application indicated. Remove adhesives, sealer, wax, and dirt; and scarify substrate as follows:

1. At minimum, shot-blast all existing floor surfaces using power-driven, metal-shot-recycling equipment. Shot-blast or otherwise etch or scarify new concrete floor surfaces if required to bring surface into compliance with manufacturer's recommendations.
2. Sand-blasting is not permitted. Rotating-blade type scarifiers are not permitted.

B. Upon completion of floor preparation work, obtain and submit to the Architect, written approval of existing substrate conditions by an authorized representative of the resinous flooring manufacturer.

C. Obtain Architect's written approval prior to beginning subsequent application work.

3.2 APPLICATION

A. Application, General: Provide final installation with no seams, joints, or cracks. Provide seamless transition between adjoining rooms. Extend base up walls and up base of walls to provide an uninterrupted cove base around room perimeter. Apply resinous flooring in pit, covering sides and bottom.

B. Prime surfaces using manufacturer's recommended penetrating primer for indicated application. Apply primer in strict adherence to manufacturer's printed instructions.

C. Mortar Installation: Blend materials in accordance with manufacturer's recommendations. Screed-apply 5/16-inch layer of mortar and trowel finish with steel-blade power trowels. Routinely clean and dry trowel blades in accordance with manufacturer's instructions. Trowel mortar a dense, hard surface with minimal porosity.

1. Install surface as level as practicable using laser lines or other method acceptable to Architect.
2. Cove Bases: Install cove bases at each wall. Use manufacturer's cove material compounded for the purpose. Cap cove base with manufacturer's standard cove cap strip.
   a. Cove Height: 6-inches.
3. Pitch 1/8-inch to drains within a 24-inch radius of each floor drain, except where concrete substrate is sloped to drain.

D. Mortar Leveling: Allow mortar to cure thoroughly. Flood surface lightly to reveal local low points ("birdbaths") and similar imperfections. Mark low points and dry and prepare surface to receive additional mortar in accordance with manufacturer's directions. Apply additional mortar materials as required to level surface.

E. Coating Application: Apply coating material with a rubber squeegee. Immediately after application, use a short-nap roller to remove squeegee lines and smooth out the coat. Apply in 4- to 6-mil thick layers and allow to thoroughly dry before subsequent applications.

1. Apply material to a total built-up thickness of not less than 12-mils.
2. Finish flooring surface with non-slip roughened texture.

3.3 CLEANING AND PROTECTION

A. Clean floors after installation in accordance with flooring manufacturer's written instructions. Do not polish floors.

END OF SECTION 096723

UNIVERSITY OF MICHIGAN
ARCHITECTURE, ENGINEERING AND CONSTRUCTION

ARCHITECTURE & ENGINEERING
326 East Hoover, Mail Stop B
Ann Arbor, MI 48109-1002
Phone: 734-764-3414
Fax: 734-936-3334

BuildingName
The Description of the Project
P00000000 0000

SPECIFICATION DIVISION 9

NUMBER SECTION DESCRIPTION

DIVISION 09 FINISHES
SECTION 096813 - TILE CARPETING

END OF CONTENTS TABLE

DIVISION 09 FINISHES
SECTION 096813 - TILE CARPETING

SECTION WRITTEN FOR PROJECTS WITH SELECTED CARPET PRODUCTS / COMPEDITIVELY BID INSTALLATION.

PART 1 - GENERAL

1.1 RELATED DOCUMENTS

A. Drawings and general provisions of the Contract, Standard General and Supplementary General Conditions, Division 01 Specification Sections, and other applicable Specification Sections, in particular the Related Sections listed below, apply to this Section.

B. Related Sections:

1. Section 035416 - Hydraulic Cement Underlayment
2. Section 096500 - Resilient Flooring
3. Section 096816 - Sheet Carpeting

1.2 SUMMARY

A. Section Includes:

1. Modular carpet tile.
2. Resilient base.

B. Work Provided under this section but specified under other sections:

1. Resilient wall base.
2. Resilient transitions strips.

1.3 SUBMITTALS

A. Product Data: For each type of product.

1. Include manufacturer's written data on physical characteristics, durability, and fade resistance.
2. Include installation recommendations for each type of substrate.
3. For installation adhesive, documentation including printed statement of VOC content.

INCLUDE BELOW FOR LEED PROJECTS. NOTE THAT REQUIREMENTS ARE BASED ON LEED 2009

B. LEED Submittals:

1. Product Data for Credit EQ 4.3:
   a. For carpet tile, documentation indicating compliance with testing and product requirements of CRI's "Green Label Plus" program.
   b. For installation adhesive, documentation including printed statement of VOC content.

C. Shop Drawings: Show the following:

1. Columns, doorways, enclosing walls or partitions, built-in cabinets, and locations where cutouts are required in carpet tiles.
2. Carpet tile type, color, and dye lot.
3. Type of subfloor.
4. Type of installation.
5. Pattern of installation.
6. Pattern type, location, and direction.
7. Pile direction.
8. Type, color, and location of insets and borders.
9. Type, color, and location of edge, transition, and other accessory strips.
10. Transition details to other flooring materials.

D. Samples: For each of the following products and for each color and texture required.

1. Carpet Tile: Full-size Sample.
2. Exposed Edge, Transition, and Other Accessory Stripping: 12-inch- long Samples.

INCLUDE BELOW FOR ALL PROJECTS

E. Affidavits of Compliance to be included in final inspection manual:

1. Provide manufacturer's letter of certification showing compliance with finish testing and classification requirements referenced by current adopted NFPA 101 "Life Safety Code".
2. Letter shall include project number, project name, and building name.

1.4 CLOSEOUT SUBMITTALS

A. Maintenance Data: For carpet tiles to include in maintenance manuals. Include the following:

1. Methods for maintaining carpet tile, including cleaning and stain-removal products and procedures and manufacturer's recommended maintenance schedule.
2. Precautions for cleaning materials and methods that could be detrimental to carpet tile.

COORDINATE WITH OCCUPANT PRIOR TO INCLUDING BELOW.

1.5 MAINTENANCE MATERIAL SUBMITTALS

A. Furnish extra materials, from the same product run, that match products installed and that are packaged with protective covering for storage and identified with labels describing contents.

1. Carpet Tile: Full-size units equal to 5 percent of amount installed for each type indicated, but not less than 10 sq. yd.

1.6 QUALITY ASSURANCE

A. Reference Standards: Products in this section shall be built, tested, and installed in compliance with the specified quality assurance standards; latest editions, unless noted otherwise.

1. Reference Standards:

REFER TO MICHIGAN BUILDING CODE FOR FURTHER REQUIREMENTS CONCERNING CLASS, FLAME SPREAD AND SMOKE DEVELOPED RATINGS.

a. Carpet Flammability: Pass pill test, ASTM D 2859 (DOC FF-1-70).

MODIFY TO CLASS II IF ALLOWABLE BY CODE AND REQUIRED BY CARPET SELECTION

b. Radiant Panel Test: Meet NFPA 253 Class I.

EDIT AND INCLUDE IF REQUIRED BY PROJECT

c. Static Electricity: 3.0 KV max. at 70 deg. F and 20% RH, AATCC 134.

1.7 FIELD CONDITIONS

A. Comply with CRI 104 for temperature, humidity, and ventilation limitations.

DELETE BELOW FOR TYPICAL INTERIOR RENOVATION WORK.

B. Environmental Limitations: Do not deliver or install carpet tiles until spaces are enclosed and weathertight, wet work in spaces is complete and dry, and ambient temperature and humidity conditions are maintained at occupancy levels during the remainder of the construction period.

RETAIN BELOW FOR PROJECTS WITH NEW CONCRETE.

C. Do not install carpet tiles over concrete slabs until slabs have cured and are sufficiently dry to bond with adhesive and concrete slabs have pH range recommended by carpet tile manufacturer.

RETAIN BELOW FOR PROJECTS WITH DEMOUNTABLE PARTITIONS.

D. Where demountable partitions or other items are indicated for installation on top of carpet tiles, install carpet tiles before installing these items.

PART 2 - PRODUCTS

2.1 MANUFACTURERS

EDIT AFTER CARPET IS SELECTED. MATERIALS AND CONSTRUCTION NOT INCLUDED. ASSUMES A SINGLE SELECTION IS MADE FOR EACH TYPE BASED ON MANUFACTURER AND PATTERN AND THAT ALTERNATIVE CARPETS ARE NOT BID.

A. Acceptable Manufacturers:

1. Carpet type no. 1: [Manufacturer Name]
   a. Style:
   b. Color:

INCLUDE MATERIALS, CONTRUCTIONS IF COMPEDITIVELY BIDDING MATERIALS AND INSTALLATION. NOT REUIQRED IF ONLY BIDDING INSTALLATION.

2.2 INSTALLATION ACCESSORIES

DELETE BELOW IF SECTION 035416 - HYDRAULIC CEMENT UNDERLAYMENT IS INCLUDED.

A. Trowelable Leveling and Patching Compounds: Latex-modified, hydraulic-cement-based formulation provided or recommended by carpet tile manufacturer.

BELOW IS TYPICAL. COORDINATE WITH INTERIOR DESIGN.

B. Adhesives: Water-resistant, mildew-resistant, nonstaining, pressure-sensitive type to suit products and subfloor conditions indicated, that complies with flammability requirements for installed carpet tile and is recommended by carpet tile manufacturer for releasable installation.

RETAIN FOR ALL PROJECTS

1. Adhesives shall have a VOC content of 50 g/L or less when calculated according to 40 CFR 59, Subpart D (EPA Method 24).

RETAIN "METAL EDGE/TRANSITION STRIPS" PARAGRAPH BELOW UNLESS RESILIENT EDGE STRIPS FOR CARPET TILE ARE SPECIFIED IN SECTION 096513 "RESILIENT BASE AND ACCESSORIES." IF RETAINING, REVISE FINISH OR DESCRIPTION TO SUIT PROJECT AND SHOW WIDTH REQUIREMENTS ON DRAWINGS.

C. Metal Edge/Transition Strips: Extruded aluminum with mill finish of profile and width shown, of height required to protect exposed edge of carpet, and of maximum lengths to minimize running joints.

2.3 WALL BASE

A. Provide wall base for each area scheduled to receive carpet. Comply with the requirements for wall base specified in Division 9 Section "Resilient Flooring".

PART 3 - EXECUTION

3.1 EXAMINATION

A. Examine substrates, areas, and conditions, with Installer present, for compliance with requirements for maximum moisture content, alkalinity range, adhesive and floor coating removal, installation tolerances, and other conditions affecting carpet tile performance. Examine carpet tile for type, color, pattern, and potential defects.

RETAIN "CONCRETE SUBFLOORS" PARAGRAPH BELOW IF PRODUCTS ARE ADHESIVELY ATTACHED TO CONCRETE SUBFLOORS.

B. Concrete Subfloors: Verify that concrete slabs comply with ASTM F 710 and the following:

REVISE FIRST SUBPARAGRAPH BELOW TO INCLUDE SPECIFIC TESTS IF APPLICABLE TO PROJECT.

1. Slab substrates are dry and free of curing compounds, sealers, hardeners, and other materials that may interfere with adhesive bond. Determine adhesion and dryness characteristics by performing bond and moisture tests recommended by carpet tile manufacturer.

INCLUDE BELOW NEW SLABS

2. Subfloor finishes comply with requirements specified in Section 033000 "Cast-in-Place Concrete" for slabs receiving carpet tile.
3. Subfloors are free of cracks, ridges, depressions, scale, and foreign deposits.

COORDINATE REQUIREMENTS BELOW WITH ACCESS FLOORING.

C. Raised access flooring systems: Verify the following:

1. Access floor substrate is compatible with carpet tile and adhesive if any.
2. Underlayment surface is flat, smooth, evenly planed, tightly jointed, and free of irregularities, gaps greater than 1/8 inch, protrusions more than 1/32 inch, and substances that may interfere with adhesive bond or show through surface.

D. Proceed with installation only after unsatisfactory conditions have been corrected.

3.2 PREPARATION

A. General: Comply with CRI 104, Section 6.2, "Site Conditions; Floor Preparation," and with carpet tile manufacturer's written installation instructions for preparing substrates indicated to receive carpet tile installation.

RETAIN OR REVISE FIRST PARAGRAPH BELOW TO SUIT PRODUCT AND PROJECT; DIMENSIONS ARE RECOMMENDED BY CRI.

B. Use trowelable leveling and patching compounds, according to manufacturer's written instructions, to fill cracks, holes, depressions, and protrusions in substrates. Fill or level cracks, holes and depressions 1/8 inch wide or wider and protrusions more than 1/32 inch unless more stringent requirements are required by manufacturer's written instructions.

REQUIREMENT BELOW IS INTENDED TO LIMIT CLAIMS FOR EXTRAS. INCREASE OR DECREASE AREA PERCENT BASED ON YOUR JUDGMENT, OR DELETE ENTIRELY FOR NEW CONCRETE FLOORS.

1. Patching is required for approximately [not less than] 20 percent of the gross floor area of the Project.

INCLUDE BELOW FOR LARGE AREAS OF PATCHING OR LEVELING. COORDINATE WITH "HYDRAULIC CEMENT UNDERLAYMENT" SECTION.

2. Floor patching and leveling is included in Division 03 Section "Hydraulic Cement Underlayment."

RETAIN BELOW FOR NEW CONCRETE SURFACES

C. Remove coatings, including curing compounds, and other substances that are incompatible with adhesives and that contain soap, wax, oil, or silicone, without using solvents. Use mechanical methods recommended in writing by carpet tile manufacturer.

RETAIN BELOW FOR EXISTING CONCRETE SURFACES

D. Remove existing adhesives per Division 02 Section "Selective Demolition." Remove other coatings as recommended in writing by carpet tile manufacturer.

E. Broom and vacuum clean substrates to be covered immediately before installing carpet tile.

3.3 INSTALLATION

A. General: Comply with CRI 104, Section 14, "Carpet Modules," and with carpet tile manufacturer's written installation instructions.

SELECT ITEM B OR C BELOW.

B. Installation Method: As recommended in writing by carpet tile manufacturer.

COORDINATE SPECIFIC "INSTALLATION METHOD" REQUIREMENTS WITH INTERIOR DESIGN AND EDIT BELOW. NOTE THE FOLLOWING GENERAL GUIDELINES

FULL-SPREAD, GLUE-DOWN INSTALLATION IS APPROPRIATE FOR WHEEL TRAFFIC.

PARTIAL GLUE-DOWN INSTALLATION IS APPROPRIATE FOR CARPET TILES OF MODERATE DIMENSIONAL STABILITY, WEIGHT, AND MASS.

FREE-LAY INSTALLATION IS APPROPRIATE FOR DIMENSIONALLY STABLE CARPET TILES WITH HEAVY BACKINGS. REVISE SECOND OPTION BELOW IF SPOT-GLUED INSTALLATION IS RECOMMENDED BY MANUFACTURER AND SUITS PRODUCT AND PROJECT.

C. Installation Method: [Glue down; install every tile with full-spread, releasable, pressure-sensitive adhesive] [Partial glue down; install periodic tiles with releasable, pressure-sensitive adhesive] [Free lay; install carpet tiles without adhesive].

D. Maintain dye lot integrity. Do not mix dye lots in same area.

E. Cut and fit carpet tile to butt tightly to vertical surfaces, permanent fixtures, and built-in furniture including cabinets, pipes, outlets, edgings, thresholds, and nosings. Bind or seal cut edges as recommended by carpet tile manufacturer.

F. Extend carpet tile into toe spaces, door reveals, closets, open-bottomed obstructions, removable flanges, alcoves, and similar openings.

G. Maintain reference markers, holes, and openings that are in place or marked for future cutting by repeating on finish flooring as marked on subfloor. Use nonpermanent, nonstaining marking device.

H. Pattern:

1. General: Install pattern parallel to walls and borders.

SELECT OPTION FROM BELOW OR CONSIDERING SHOWING ON DRAWING FOR COMPLICATED PATTERNS OR MULTIPLE CARPETS WITH DIFFERENT REQUIREMENTS.

2. Monolithic.
3. Quarter-turn.
4. Ashlar.

DELETE BELOW IF NO RAISED ACCESS FLOORING SYSTEMS. ADHESIVE IN SEAMS MAY IMPEDE PANEL REMOVAL AND REPLACEMENT.

I. Stagger joints of carpet tiles so carpet tile grid is offset from access flooring panel grid. Do not fill seams of access flooring panels with carpet adhesive; keep seams free of adhesive.

DELETE ARTICLE BELOW IF NO WALL BASE INCLUDED OR IF SPECIFIED IN OTHER SECTION.

3.4 WALL BASE INSTALLATION

A. Apply wall base in lengths as long as practicable to walls, columns, and all permanent fixtures and where indicated. Mitered outside corners not acceptable. Apply base to fixed laboratory cabinetry as follows:

1. Base cabinet toe spaces.
2. Exposed sides of base cabinets.
3. Filler and closure panels extending to floor.

3.5 CLEANING AND PROTECTION

A. Perform the following operations immediately after installing carpet tile:

1. Remove excess adhesive and other surface blemishes using cleaner recommended by carpet tile manufacturer.
2. Remove yarns that protrude from carpet tile surface.
3. Vacuum carpet tile using commercial machine with face-beater element.

B. Protect installed carpet to comply with CRI 104, Section 16, "Protecting Indoor Installations."

C. Protect carpet tile against damage from construction operations and placement of equipment and fixtures during the remainder of construction period. Use protection methods indicated or recommended in writing by carpet tile manufacturer.

END OF SECTION 096813

UNIVERSITY OF MICHIGAN
ARCHITECTURE, ENGINEERING AND CONSTRUCTION

ARCHITECTURE & ENGINEERING
326 East Hoover, Mail Stop B
Ann Arbor, MI 48109-1002
Phone: 734-764-3414
Fax: 734-936-3334

BuildingName
The Description of the Project
P00000000 0000

SPECIFICATION DIVISION 9

NUMBER SECTION DESCRIPTION

DIVISION 09 FINISHES
SECTION 096816 – SHEET CARPETING

END OF CONTENTS TABLE

DIVISION 09 FINISHES
SECTION 096816 – SHEET CARPETING

SECTION WRITTEN FOR PROJECTS WITH SELECTED CARPET PRODUCTS / COMPETTIVELY BID INSTALLATION.

PART 1 - GENERAL

1.1 RELATED DOCUMENTS

A. Drawings and general provisions of the Contract, including General and Supplementary Conditions and Division 01 Specification Sections, and other applicable Specification Sections, in particular the Related Sections listed below, apply to this Section.

B. Related Sections:

1. Section 035416 – Hydraulic Cement Underlayment
2. Section 096500 – Resilient Flooring
3. Section 096813 – Tile Carpeting

1.2 SUMMARY

MODIFY TO SUIT PRODUCT SELECTIONS.

A. Section Includes:

1. Tufted carpet.
2. Woven carpet.
3. Carpet cushion.

B. Work Provided under this section but specified under other Sections:

1. Resilient wall base.
2. Resilient transition strips.

1.3 SUBMITTALS

A. Product Data: For each type of product.

1. Include manufacturer's written data on physical characteristics, durability, and fade resistance.
2. Include installation recommendations for each type of substrate.
3. For installation adhesive, documentation including printed statement of VOC content.

INCLUDE BELOW FOR LEED PROJECTS. NOTE THAT REQUIREMENTS ARE BASED ON LEED 2009

B. LEED Submittals:

1. Product Data for Credit EQ 4.3:
   a. For carpet, documentation indicating compliance with testing and product requirements of CRI's "Green Label Plus" program.

b. For installation adhesive, documentation including printed statement of VOC content.

C. Shop Drawings: Show the following:

1. Columns, doorways, enclosing walls or partitions, built-in cabinets, and locations where cutouts are required in carpet.
2. Carpet type, color, and dye lot.
3. Layout and seaming diagrams.
4. Type of subfloor.
5. Type of installation.
6. Pattern of installation.
7. Pattern type, location, and direction.
8. Pile direction.
9. Type, color, and location of insets and borders.
10. Type, color, and location of edge, transition, and other accessory strips.
11. Transition details to other flooring materials.

D. Samples: For each of the following products and for each color and texture required.

1. Submit 18 inch by 27 inch samples of each type, color, pattern and texture of carpet.
2. Exposed Edge, Transition, and Other Accessory Stripping: 12-inch long samples.

INCLUDE BELOW FOR ALL PROJECTS.

E. Affidavits of Compliance to be included in final inspection manual:

1. Provide manufacturer's letter of certification showing compliance with finish testing and classification requirements referenced by current adopted NFPA 101 "Life Safety Code".
2. Letter shall include project number, project name, and building name.

1.4 CLOSEOUT SUBMITTALS

A. Maintenance Data: For each type of carpet to include in maintenance manuals. Include the following:

1. Methods for maintaining carpet, including cleaning and stain-removal products and procedures and manufacturer's recommended maintenance schedule.
2. Precautions for cleaning materials and methods that could be detrimental to carpet.

COORDINATE WITH OCCUPANT PRIOR TO INCLUDING BELOW.

1.5 MAINTENANCE MATERIAL SUBMITTALS

A. Furnish extra materials, from the same product run, that match products installed and that are packaged with protective covering for storage and identified with labels describing contents.

1. Carpet: Full-width rolls equal to 5 percent of amount installed for each type indicated, but not less than 10 sq. yd.

1.6 QUALITY ASSURANCE

A. Reference Standards: Products in this Section shall be built, tested, and installed in compliance with the specified quality assurance standards; latest editions, unless noted otherwise.

1. Reference Standards:

REFER TO MICHIGAN BUILDING CODE FOR FURTHER REQUIREMENTS CONCERNING CLASS, FLAME SPREAD AND SMOKE DEVELOPED RATINGS.

a. Carpet Flammability: Pass pill test, ASTM D 2859 (DOC FF-1-70).

MODIFY TO CLASS II IF ALLOWABLE BY CODE AND REQUIRED BY CARPET SELECTION

2. Radiant Panel Test: Meet NFPA Class I.

EDIT AND INCLUDE IF REQUIRED BY PROJECT

3. Static Electricity: 3.0 KV max. at 70 deg. F and 20% RH, AATCC 134.

1.7 FIELD CONDITIONS

A. Comply with CRI 104 for temperature, humidity, and ventilation limitations.

DELETE BELOW FOR TYPICAL INTERIOR RENOVATION WORK.

B. Environmental Limitations: Do not deliver or install carpet until spaces are enclosed and weathertight, wet work in spaces is complete and dry, and ambient temperature and humidity conditions are maintained at occupancy levels during the remainder of the construction period.

RETAIN BELOW FOR PROJECTS WITH NEW CONCRETE.

C. Do not install carpet over concrete slabs until slabs have cured and are sufficiently dry to bond with adhesive, and concrete slabs have pH range recommended by carpet manufacturer.

RETAIN BELOW FOR PROJECTS WITH DEMOUNTABLE PARTITIONS.

D. Where demountable partitions or other items are indicated for installation on top of carpet, install carpet before installing these items.

PART 2 - PRODUCTS

2.1 MANUFACTURERS

EDIT AFTER CARPET IS SELECTED. MATERIALS AND CONSTRUCTION NOT INCLUDED. ASSUMES A SINGLE SELECTION IS MADE FOR EACH TYPE OF

CARPET BASED ON MANUFACTURER AND PATTERN AND THAT ALTERNATIVE CARPETS ARE NOT BID.

A. Acceptable Manufacturers:

1. Carpet type no. 1: [Manufacturer Name]
   a. Style:
   b. Color:

2.2 INSTALLATION ACCESSORIES

DELETE BELOW IF SECTION 035416 - HYDRAULIC CEMENT UNDERLAYMENT IS INCLUDED.

A. Trowelable Leveling and Patching Compounds: Latex-modified, hydraulic-cement-based formulation provided or recommended by carpet manufacturer.

BELOW IS TYPICAL. COORDINATE WITH INTERIOR DESIGN.

B. Adhesives: Water-resistant, mildew-resistant, nonstaining, pressure-sensitive type to suit products and subfloor conditions indicated, that complies with flammability requirements for installed carpet and is recommended by carpet manufacturer for installation.

RETAIN FOR ALL PROJECTS

1. Adhesives shall have a VOC content of 50 g/L or less when calculated according to 40 CFR 59, Subpart D (EPA Method 24).

RETAIN "METAL EDGE/TRANSITION STRIPS" PARAGRAPH BELOW UNLESS RESILIENT EDGE STRIPS FOR CARPET ARE SPECIFIED IN SECTION 096513 "RESILIENT BASE AND ACCESSORIES." IF RETAINING, REVISE FINISH OR DESCRIPTION TO SUIT PROJECT AND SHOW WIDTH REQUIREMENTS ON DRAWINGS.

C. Metal Edge/Transition Strips: Extruded aluminum with mill finish of profile and width shown, of height required to protect exposed edge of carpet, and of maximum lengths to minimize running joints.

D. Seam Adhesive: Hot-melt adhesive tape or similar product recommended by carpet manufacturer for sealing and taping seams and butting cut edges at backing to form secure seams and to prevent pile loss at seams.

2.3 WALL BASE

A. Provide wall base for each area scheduled to receive carpet. Comply with the requirements for wall base specified in Division 9 Section "Resilient Flooring".

PART 3 - EXECUTION

3.1 EXAMINATION

A. Examine substrates, areas, and conditions, with Installer present, for compliance with requirements for maximum moisture content, alkalinity range, adhesive and floor coating removal, installation tolerances, and other conditions affecting carpet performance. Examine carpet for type, color, pattern, and potential defects.

RETAIN "CONCRETE SUBFLOORS" PARAGRAPH BELOW IF PRODUCTS ARE ADHESIVELY ATTACHED TO CONCRETE SUBFLOORS.

B. Concrete Subfloors: Verify that concrete slabs comply with ASTM F 710 and the following:

REVISE FIRST SUBPARAGRAPH BELOW TO INCLUDE SPECIFIC TESTS IF APPLICABLE TO PROJECT.

1. Slab substrates are dry and free of curing compounds, sealers, hardeners, and other materials that may interfere with adhesive bond. Determine adhesion and dryness characteristics by performing bond and moisture tests recommended by carpet manufacturer.

INCLUDE BELOW FOR NEW SLABS

2. Subfloor finishes comply with requirements specified in Section 033000 "Cast-in-Place Concrete" for slabs receiving carpet.
3. Subfloors are free of cracks, ridges, depressions, scale, and foreign deposits.

C. Proceed with installation only after unsatisfactory conditions have been corrected.

3.2 PREPARATION

A. General: Comply with CRI 104, Section 7.3, "Site Conditions; Floor Preparation," and with carpet manufacturer's written installation instructions for preparing substrates.

RETAIN OR REVISE FIRST PARAGRAPH BELOW TO SUIT PRODUCT AND PROJECT; DIMENSIONS ARE RECOMMENDED BY CRI.

B. Use trowelable leveling and patching compounds, according to manufacturer's written instructions, to fill cracks, holes, depressions, and protrusions in substrates. Fill or level cracks, holes and depressions 1/8 inch wide or wider and protrusions more than 1/32 inch unless more stringent requirements are required by manufacturer's written instructions.

REQUIREMENT BELOW IS INTENDED TO LIMIT CLAIMS FOR EXTRAS. INCREASE OR DECREASE AREA PERCENT BASED ON YOUR JUDGMENT, OR DELETE ENTIRELY FOR NEW CONCRETE FLOORS.

1. Patching is required for approximately [not less than] 20 percent of the gross floor area of the Project.

INCLUDE BELOW FOR LARGE AREAS OF PATCHING OR LEVELING. COORDINATE WITH "HYDRAULIC CEMENT UNDERLAYMENT" SECTION.

2. Floor patching and leveling is included in Division 03 Section "Hydraulic Cement Underlayment."

RETAIN BELOW FOR NEW CONCRETE SURFACES

C. Remove coatings, including curing compounds, and other substances that are incompatible with adhesives and that contain soap, wax, oil, or silicone, without using solvents. Use mechanical methods recommended in writing by carpet manufacturer.

RETAIN BELOW FOR EXISTING CONCRETE SURFACES

D. Remove existing adhesives per Division 02 Section "Selective Demolition." Remove other coatings as recommended in writing by carpet manufacturer.

E. Broom and vacuum clean substrates to be covered immediately before installing carpet.

3.3 CARPET INSTALLATION

A. General: Comply with CRI 104 and with carpet manufacturer's written installation instructions for the following:

COORDINATE SPECIFIC "INSTALLATION METHOD" REQUIREMENTS WITH INTERIOR DESIGN AND EDIT BELOW. BELOW ARE COMMONLY USED EXAMPLES. OTHER EXAMPLES ARE LISTED IN AIA MASTERSPEC 096816.

1. Carpet Seam Edge Preparation: Comply with CRI 104, Section 8, "Carpet Seam Edge Preparation."
2. Direct-Glue-Down Installation: Comply with CRI 104, Section 9, "Direct Glue-Down Installation."
3. Stair Installation: Comply with CRI 104, Section 13, "Carpet on Stairs" for [**stretch-in**] [**glue-down**] installation.

B. Comply with carpet manufacturer's written recommendations and Shop Drawings for seam locations and direction of carpet; maintain uniformity of carpet direction and lay of pile. At doorways, center seams under the door in closed position.

C. Pre-plan installation for proper sequencing with other work.

D. Do not bridge building expansion joints with carpet.

E. Cut and fit carpet to butt tightly to vertical surfaces, permanent fixtures, and built-in furniture including cabinets, pipes, outlets, edgings, thresholds, and nosings. Bind or seal cut edges as recommended by carpet manufacturer.

F. Extend carpet into toe spaces, door reveals, closets, open-bottomed obstructions, removable flanges, alcoves, and similar openings.

G. Maintain reference markers, holes, and openings that are in place or marked for future cutting by repeating on finish flooring as marked on subfloor. Use nonpermanent, nonstaining marking device.

RETAIN FIRST PARAGRAPH BELOW IF CARPET HAS A PATTERN OR MODIFY TO SUIT PROJECT.

H. Install pattern parallel to walls and borders to comply with CRI 104, Section 15, "Patterned Carpet Installations" and with carpet manufacturer's written recommendations.

RETAIN BELOW FOR HIGH TRAFFIC SEAMS. NOTE THAT SEALED SEEMS MAY NOT BE TOTALLY INVISIBLE.

I. Sealing Edges – Prior to seaming, both trimmed edges of the carpet sections to be joined must be sealed with an manufacturer's recommended seam adhesive. Apply seam adhesive in a manner that encapsulates both primary and secondary backings without contaminating face yarns

J. Save carpet scraps, defined as mill ends less than 9 feet long and pieces larger than 3 sq. ft. in area and wider than 8 inches, and deliver to Owner's storage space as directed. Dispose of smaller pieces.

DELETE ARTICLE BELOW IF NO WALL BASE INCLUDED OR IF SPECIFIED IN ANOTHER SECTION.

3.4 WALL BASE INSTALLATION

A. Apply wall base in lengths as long as practicable to walls, columns, and all permanent fixtures and where indicated. Mitered outside corners not acceptable. Apply base to fixed laboratory cabinetry as follows:

1. Base cabinet toe spaces.
2. Exposed sides of base cabinets.
3. Filler and closure panels extending to floor.

3.5 CLEANING AND PROTECTING

A. Perform the following operations immediately after installing carpet:

1. Remove excess adhesive, seam sealer, and other surface blemishes using cleaner recommended by carpet manufacturer.
2. Remove yarns that protrude from carpet surface.
3. Vacuum carpet using commercial machine with face-beater element.

B. Protect installed carpet to comply with CRI 104, Section 16, "Protecting Indoor Installations."

C. Protect carpet against damage from construction operations and placement of equipment and fixtures during the remainder of construction period. Use protection methods indicated or recommended in writing by carpet manufacturer and carpet adhesive manufacturer.

END OF SECTION 096816

UNIVERSITY OF MICHIGAN
ARCHITECTURE, ENGINEERING AND CONSTRUCTION

ARCHITECTURE & ENGINEERING
326 East Hoover, Mail Stop B
Ann Arbor, MI 48109-1002
Phone: 734-764-3414
Fax: 734-936-3334

BuildingName
The Description of the Project
P00000000 0000

SPECIFICATION DIVISION 9

NUMBER SECTION DESCRIPTION

DIVISION 09 FINISHES
SECTION 098433 – SOUND ABSORBING WALL UNITS

END OF CONTENTS TABLE

DIVISION 09 FINISHES
SECTION 098433 – SOUND ABSORBING WALL UNITS

JUNE 2005 - UPDATED TO CHANGE TO 1997 NFPA "LIFE SAFETY CODE".

THIS SECTION SPECIFIES STANDARD WALL MOUNTED ACOUSTIC TILE AND AUDIOCUSTIC "SONEX" UNITS.

OTHER OPTIONS ARE AVAILABLE. CONSULT MANUFACTURER'S LITERATURE

PART 1 - GENERAL

1.1 SUMMARY

A. Extent of acoustic wall panels is indicated on Drawings.

1.2 SUBMITTALS

A. Product Data: Submit mfr's product literature, color samples and installation instructions.

INCLUDE BELOW FOR ALL PROJECTS.

B. Affidavits of Compliance to be included in final inspection manual:

1. Provide manufacturer's letter of certification showing compliance with finish testing and classification requirements referenced by current adopted NFPA 101 "Life Safety Code".
2. Letter shall include project number, project name, and building name.

PART 2 - PRODUCTS

2.1 ACOUSTIC BAFFLE PANELS

A. Open cell polyester urethane, wall mounted acoustical panels.

1. Manufacturer: "Sonex Co."
   a. Model: "Sonex Classic".
   b. Size: 24 inches by 48 inches by 2 inches thick.

2.2 ACOUSTIC TILE

A. Acoustic tile, water felted units.

1. Manufacturer: "Armstrong World Industries"
   a. Model: "Optima" textured scrim wall panels.
   b. Size: 48 inches by 96 inches by 1 inch thick.

PART 3 - EXECUTION

3.1 INSTALLATION

A. Installation: Comply with mfr's recommended procedures for indicated application. Use mfr's recommended adhesives for each substrate.

END OF SECTION 098433

UNIVERSITY OF MICHIGAN
ARCHITECTURE, ENGINEERING AND CONSTRUCTION

ARCHITECTURE & ENGINEERING
326 East Hoover, Mail Stop B
Ann Arbor, MI 48109-1002
Phone: 734-764-3414
Fax: 734-936-3334

BuildingName
The Description of the Project
P00000000 0000

SPECIFICATION DIVISION 9

NUMBER SECTION DESCRIPTION

DIVISION 09 FINISHES
SECTION 099100 – PAINTING

END OF CONTENTS TABLE

DIVISION 09 FINISHES
SECTION 099100 – PAINTING

JULY 2011 – UPDATED TO ADD LOW VOC PRODUCTS TO INTERIOR PAINT SCHEDULE AND TO REMOVE MOST NON-COMPLIANT VOC PRODUCTS AS OPTIONS FOR INTERIOR PAINTS. REFER TO DESIGN GUIDELINE 099110 FOR INFORMATION ON PERMISSIBLE EXCEPTIONS TO LOW VOC PRODUCTS.

SECTION ALSO REFORMATTED TO MEET CURRENT UM STANDARDS.

12/1/2017 - ADDED PROHIBITION OF PRODUCTS INCLUDING ISOCYANATE COMPOUNDS.

PART 1 - GENERAL

1.1 RELATED DOCUMENTS

A. Drawings and general provisions of the Contract, including Standard General Conditions, Supplemental General Conditions, Division 01 Specification Sections, and other applicable Specification Sections, apply to this Section.

B. Related Sections:

LIST BELOW CONTAINS ITEMS THAT ARE USUALLY SHOP PRIMED AND MATERIALS THAT MIGHT BE SPECIFIED IN THIS SECTION. REVISE TO SUIT THE PROJECT. VERIFY THAT SECTION TITLES LISTED BELOW ARE CORRECT FOR THIS PROJECT'S SPECIFICATIONS. IF ROOM FINISH SCHEDULE IS TO BE INCLUDED AS A SEPARATE SPECIFICATION SECTION ADD THAT SECTION TO THE LIST BELOW. INCLUDE SECTION BELOW FOR ALL TYPES OF EPOXY PAINT.

1. Division 01 Section "Work Restrictions" for special protections for epoxy painting work.
2. Division 05 "Structural Steel Framing" for shop priming structural steel.
3. Division 05 Section "Metal Fabrications" for shop priming ferrous metal.
4. Division 06 Section "Interior Architectural Woodwork" for shop finishing interior architectural woodwork.
5. Division 08 "Hollow Metal Doors and Frames" for shop priming steel doors and frames.
6. Division 08 Section "Flush Wood Doors" for pre-finished wood doors.
7. Division 09 Section "Gypsum Board Assemblies" for surface preparation for gypsum board.
8. Division 09 Section "Electrostatically Applied Coating" for electrically charged, spray-applied coatings.
9. Divisions 21, 22 and 23: Mechanical.
10. Division 26: Electrical.
11. Division 27: Communications.
12. Division 28: Electronic Safety and Security.

1.2 SUMMARY

A. Section Includes:

1. Surface preparation and field painting of the following:

ADJUST LIST BELOW TO SUIT THE PROJECT.

a. Exposed exterior items and surfaces.
b. Exposed interior items and surfaces.
c. Surface preparation, priming, and finish coats specified in this Section are in addition to shop priming and surface treatment specified in other Sections.

1.3 DEFINITIONS

STANDARD TERMS USED BY THE COATINGS INDUSTRY ARE DEFINED IN ASTM D 16.

A. General: Standard coating terms defined in ASTM D 16 apply to this Section.

DELETE GLOSS RANGES BELOW NOT REQUIRED FOR THE PROJECT. STANDARD GLOSS RANGES WERE DEVELOPED BY THE NATIONAL PAINT AND COATINGS ASSOCIATION (NPCA).

1. Flat refers to a lusterless or matte finish with a gloss range below 15 when measured at an 85-degree meter.
2. Eggshell refers to low-sheen finish with a gloss range between 5 and 20 when measured at a 60-degree meter.
3. Satin refers to low-sheen finish with a gloss range between 15 and 35 when measured at a 60-degree meter.
4. Semigloss refers to medium-sheen finish with a gloss range between 30 and 65 when measured at a 60-degree meter.
5. Full gloss refers to high-sheen finish with a gloss range more than 65 when measured at a 60-degree meter.

B. The term "exposed surfaces" includes areas visible when permanent or built-in fixtures, convector covers, covers for finned-tube radiation, grilles, and similar components are in place. Extend coatings in these areas, as required, to maintain the system integrity and provide desired protection.

1.4 SUBMITTALS

EXPAND PARA AND SUBPARAS BELOW TO SUIT THE PROJECT AND PRODUCTS REQUIRED.

A. Product Data: For each paint system specified. Include block fillers and primers.

1. Material List: Provide an inclusive list of required coating materials. Indicate each material and cross-reference specific coating, finish system, and application. Identify each material by manufacturer's catalog number and general classification.
2. Manufacturer's Information: Provide manufacturer's technical information, including label analysis, statement of VOC content and instructions for handling, storing, and applying each coating material proposed for use.

RETAIN PARAGRAPH BELOW FOR LEED PROJECTS.

B. LEED Submittals:

1. Product Data for Credit EQ 4.2: For paints and coatings, including printed statement of VOC content.

REVISE PARA BELOW IF COLORS ARE PRESELECTED AND SPECIFIED OR SCHEDULED.

C. Samples for Initial Selection: Manufacturer's color charts showing the full range of colors available for each type of finish-coat material indicated.

RETAIN BELOW WITH OR WITHOUT ABOVE.

D. Samples for Verification: Of each color and material to be applied, with texture to simulate actual conditions.

1.5 MAINTENANCE MATERIAL SUBMITTALS

A. Furnish extra materials, **from the same product run**, that match products installed and that are packaged with protective covering for storage and identified with labels describing contents.

REVISE BELOW TO SUIT PROJECT.

1. Paint: **5** percent, but not less than **1 gallon** of each material and color applied.

1.6 QUALITY ASSURANCE

A. Manufacturers and Products: The products and manufacturers specified in this Section establish the standard of quality for the Work. Subject to compliance with all requirements, provide specified products from the manufacturers named in Part 2.

B. Reference Standards: Products in this section shall be built, tested, and installed in compliance with the specified quality assurance standards; latest editions, unless noted otherwise.

1. ASTM D16 Standard Terminology for Paint, Related Coatings, Materials, and Applications.

C. Source Limitations: Obtain block fillers, primers, and undercoat materials for each coating system from the same manufacturer as the finish coats.

1.7 DELIVERY, STORAGE, AND HANDLING

A. Deliver materials to the Project Site in manufacturer's original, unopened packages and containers bearing manufacturer's name and label.

B. Store materials not in use in tightly covered containers in a well-ventilated area at a minimum ambient temperature of 45 deg F. Maintain containers used in storage in a clean condition, free of foreign materials and residue.

1. Protect from freezing. Keep storage area neat and orderly. Remove oily rags and waste daily. Take necessary measures to ensure that workers and work areas are protected from fire and health hazards resulting from handling, mixing, and application.

ADD SPECIAL REQUIREMENTS FOR FIRE PROTECTION, HEATING, VENTILATION, AND OTHER SPECIAL CONDITIONS FOR STORAGE AREAS ON-SITE, IF NECESSARY.

1.8 SITE CONDITIONS

REVISE 2 PARAGRAPHS BELOW TO SUIT THE PROJECT REQUIREMENTS AND MATERIALS TO BE USED.

A. Apply water-based paints only when the temperature of surfaces to be painted and surrounding air temperatures are between 50 and 90 deg F.

B. Apply solvent-thinned paints only when the temperature of surfaces to be painted and surrounding air temperatures are between 45 and 95 deg F.

DELETE BELOW IF NO EXTERIOR PAINTING WORK INCLUDED.

C. Do not apply paint in snow, rain, fog, or mist; or when the relative humidity exceeds 85 percent; or at temperatures less than 5 deg F above the dew point; or to damp or wet surfaces.

1. Painting may continue during inclement weather if surfaces and areas to be painted are enclosed and heated within temperature limits specified by manufacturer during application and drying periods.

PART 2 - PRODUCTS

2.1 MANUFACTURERS

A. Products: Subject to compliance with requirements, provide one of the products in the paint schedules.

B. Manufacturers:

1. Benjamin Moore & Co.
2. International Protective Coatings.
3. O'Leary Paint Co.
4. PPG Industries, Inc.
5. Pratt & Lambert Paints.
6. Sherwin-Williams Co.
7. Tnemec.

2.2 PAINT MATERIALS, GENERAL

ALWAYS RETAIN PARA BELOW. SYSTEMS COULD FAIL IF COATINGS ARE INCOMPATIBLE.

A. Material Compatibility:

1. Provide materials for use that are compatible with one another and substrates indicated, under conditions of service and application as demonstrated by manufacturer, based on testing and field experience.

RETAIN VALUES BELOW UNLESS AREA BEING PAINTED MEETS EXCEPTIONS LISTED IN DESIGN GUIDELINE 099110. VALUES LISTED COMPLY WITH LEED-NC, LEED-CI, OR LEED-CS CREDIT EQ 4.2 (AS OF 7/2011); COORDINATE WITH PRODUCTS.

B. VOC Content for Interior Paints: For interior paints and coatings applied at Project site, the following VOC limits, exclusive of colorants added to a tint base, when calculated according to 40 CFR 59, Subpart D (EPA Method 24)].

1. Flat Paints and Coatings: 50 g/L.
2. Nonflat Paints and Coatings: 150 g/L.
3. Dry-Fog Coatings: 400 g/L.
4. Primers, Sealers, and Undercoaters: 200 g/L.
5. Anticorrosive and Antirust Paints Applied to Ferrous Metals: 250 g/L.
6. Zinc-Rich Industrial Maintenance Primers: 340 g/L.
7. Pretreatment Wash Primers: 420 g/L.
8. Floor Coatings: 100 g/L.
9. Shellacs, Clear: 730 g/L.
10. Shellacs, Pigmented: 550 g/L.

C. Material Quality: Provide manufacturer's best-quality paint material of the various coating types specified. Paint-material containers not displaying manufacturer's product identification will not be acceptable.

ISCOYANANTE COMPOUNDS ARE OFTEN IN DRY ERASE PRODUCTS AS A HARDENER. SYMPTOMS OF EXPOSURE INCLUDE RESPIRATORY IRRITATION, ASTHMA AND THE POTENTIAL FOR INDIVIDUALS TO BECOME SENSITIZED. IF PRODUCT IS NEEDED, REMOVE THE FOLLOWING PROHIBITION AND SPECIFY REQUIREMENTS FOR MECHANICAL LOCAL EXHAUST VENTILATION, AIR MONITORING, RESPIRATORY PROTECTION, AND ADEQUATE CURE TIME BEFORE RE-OCCUPANCY. COORDINATE WITH EHS

D. Do not use products containing isocyanate compounds.

PART 3 - EXECUTION

3.1 EXAMINATION AND PREPARATION

A. Examine substrates, areas, and conditions, with the Applicator present, under which painting will be performed for compliance with paint application requirements.

1. Do not begin to apply paint until unsatisfactory conditions have been corrected and surfaces receiving paint are thoroughly dry.
2. Start of painting will be construed as the Applicator's acceptance of surfaces and conditions within a particular area.

IF EPOXY PAINTING WORK IS PART OF THE PROJECT INCLUDE THE FOLLOWING PARAGRAPH.

B. Provide seven days' notice to the Owner's Representative prior to the application of epoxy paints.

COORDINATE PRIMERS SPECIFIED IN OTHER SECTIONS WITH UNDERCOATS AND FINISH MATERIALS SPECIFIED IN THIS SECTION TO ENSURE COMPATIBILITY OF MATERIALS. SOME FINISH-COAT MATERIALS, SUCH AS LACQUERS AND EPOXIES, LIFT OIL AND OLEORESINOUS AIR-DRY PRIMERS. A LONG-OIL FINISH COAT MAY CRAWL AND HAVE POOR ADHESION WHEN USED OVER ZINC-DUST PHENOLIC OR BAKED PRIMERS.

C. Coordination of Work: Review other Sections in which primers are provided to ensure compatibility of the total system for various substrates. On request, furnish information on characteristics of finish materials to ensure use of compatible primers.

1. Notify the Architect about anticipated problems using the materials specified over substrates primed by others.

EXPAND PARA AND SUBPARA BELOW IF ADDITIONAL REQUIREMENTS ARE NECESSARY TO SATISFY UNUSUAL PROJECT CIRCUMSTANCES.

D. General: Remove hardware and hardware accessories, plates, machined surfaces, lighting fixtures, and similar items already installed that are not to be painted. If removal is impractical or impossible because of the size or weight of the item, provide surface-applied protection before surface preparation and painting.

1. After completing painting operations in each space or area, reinstall items removed using workers skilled in the trades involved.

USUALLY DELETE BELOW AND NOTE PATCHING WORK ON THE DRAWING. IF BELOW IS RETAINED, USE ONLY FOR EXISTING SURFACES WHEN PLASTER/DRYWALL TRADES ARE NOT ENGAGED ON THE PROJECT. THE INTENT OF THE REQUIREMENT BELOW IS TO REPAIR A FEW ANCHOR HOLES, DIMPLES AND SIMILAR PROBLEMS. DO NOT EXPECT PAINTERS TO BE RESPONSIBLE FOR LARGE AREA REPAIR, DRYWALL BOARD INSTALLATION, OR TAPING.

E. Repair Of Existing Plaster And Drywall Surfaces: Spackle and sand smooth minor surface imperfections in existing drywall and plaster surfaces. Repair is limited to imperfections of not more than 2 sq. inches in area and 3/8 inch in depth.

F. Cleaning, General: Before applying paint or other surface treatments, clean the substrates of substances that could impair the bond of the various coatings. Remove oil and grease before cleaning.

1. Schedule cleaning and painting so dust and other contaminants from the cleaning process will not fall on wet, newly painted surfaces.

DELETE BELOW IF EXISTING PAINT WILL NOT BE COVERED BY NEW PAINT.

2. Clean previously painted surfaces to remove dirt, masking tape, labels, adhesives, and other materials that would either be deleterious to adhesion of, or show through, new paint.

ALWAYS RETAIN PARA AND SUBPARAS BELOW THAT SPECIFY SURFACE PREPARATION. PROPER SURFACE PREPARATION IS ESSENTIAL FOR SATISFACTORY COATING PERFORMANCE. EXPAND REQUIREMENTS, IF NECESSARY, TO INCLUDE SPECIAL PROCEDURES REQUESTED BY MFRS OR TO SATISFY SPECIAL PROJECT CONDITIONS.

G. Surface Preparation: Clean and prepare surfaces to be painted according to manufacturer's written instructions for each particular substrate condition and as specified.

COORDINATION OF SHOP-APPLIED PRIMERS WITH FINISH COATS IS CRITICAL. SEE THE "COORDINATION OF WORK" PARA IN THE "EXAMINATION" ARTICLE. IF COMPATIBILITY PROBLEMS DEVELOP, IT MAY BE NECESSARY TO PROVIDE BARRIER COATS OVER SHOP-APPLIED PRIMERS OR REMOVE THE PRIMER AND REPRIME THE SUBSTRATE.

1. Provide barrier coats over incompatible primers or remove and reprime.
2. For coatings applied over previously painted surfaces, test application to check for lifting and other adhesion problems. Perform test in an isolated area where practicable.

DELETE SUBPARAS BELOW IF CEMENTITIOUS SURFACES ARE NOT TO BE PAINTED, OR REVISE TO SUIT THE PROJECT.

3. Cementitious Materials: Prepare concrete, concrete masonry block, cement plaster, and mineral-fiber-reinforced cement panel surfaces to be painted. Remove efflorescence, chalk, dust, dirt, grease, oils, and release agents. Roughen as required to remove glaze. If hardeners or sealers have been used to improve curing, use mechanical methods of surface preparation.
   a. Use abrasive blast-cleaning methods if recommended by paint manufacturer.
   b. Determine alkalinity and moisture content of surfaces by performing appropriate tests. If surfaces are sufficiently alkaline to cause the finish paint to blister and burn, correct this condition before application. Do not paint surfaces where moisture content exceeds that permitted in manufacturer's written instructions.

DELETE SUBPARA BELOW IF PROCEDURE IS NOT REQUIRED.

   c. Clean concrete floors to be painted with a 5 percent solution of muriatic acid or other etching cleaner. Flush the floor with clean water to remove acid, neutralize with ammonia, rinse, allow to dry, and vacuum before painting.

DELETE SUBPARAS BELOW IF WOOD SURFACES ARE NOT TO BE PAINTED, OR REVISE TO SUIT THE PROJECT.

4. Wood: Clean surfaces of dirt, oil, and other foreign substances with scrapers, mineral spirits, and sandpaper, as required. Sand smooth and dust off surfaces exposed to view.
   a. Scrape and clean small, dry, seasoned knots, and apply a thin coat of white shellac or other recommended knot sealer before applying primer. After priming, fill holes and imperfections in finish surfaces with putty or plastic wood filler. Sand smooth when dried.

DELETE SUBPARAS BELOW IF THESE REQUIREMENTS ARE SPECIFIED IN OTHER SECTIONS.

   b. Prime, stain, or seal wood to be painted immediately on delivery. Prime edges, ends, faces, undersides, and backsides of wood, including cabinets, counters, cases, and paneling.

c. When transparent finish is required, backprime with finish product.
d. Backprime paneling on interior partitions where masonry, plaster, or other wet wall construction occurs on backside.
e. Seal tops, bottoms, and cutouts of unprimed wood doors with a heavy coat of varnish or sealer immediately on delivery.

REVISE SUBPARAS BELOW TO SUIT THE PROJECT.

5. Ferrous Metals: Clean ungalvanized ferrous-metal surfaces that have not been shop coated; remove oil, grease, dirt, loose mill scale, and other foreign substances. Use solvent or mechanical cleaning methods that comply with the Steel Structures Painting Council's (SSPC) recommendations.

DELETE SUBPARA BELOW IF TREATMENT IS NOT REQUIRED.

a. Treat bare and sandblasted or pickled clean metal with a metal treatment wash coat before priming.

DELETE SUBPARA BELOW IF TOUCHUP PAINTING OF SHOP-APPLIED PRIMERS WILL BE DONE BY THE MATERIAL ERECTOR OR INSTALLER.

b. Touch up bare areas and shop-applied prime coats that have been damaged. Wire-brush, clean with solvents recommended by paint manufacturer, and touch up with the same primer as the shop coat.

6. Galvanized Surfaces: Clean galvanized surfaces with nonpetroleum-based solvents so surface is free of oil and surface contaminants. Remove pretreatment from galvanized sheet metal fabricated from coil stock by mechanical methods.

H. Materials Preparation: Mix and prepare paint materials according to manufacturer's written instructions.

1. Maintain containers used in mixing and applying paint in a clean condition, free of foreign materials and residue.
2. Stir material before application to produce a mixture of uniform density. Stir as required during application. Do not stir surface film into material. If necessary, remove surface film and strain material before using.
3. Use only thinners approved by paint manufacturer and only within recommended limits.

THE FOLLOWING PARA CAN STAND ALONE FOR NEW CONSTRUCTION, BUT NEEDS EXPANSION FOR RENOVATION WORK. INCLUDE APPROPRIATE SUBPARAGRAPHS BELOW FOR REVOVATION.

3.2 APPLICATION, GENERAL

THE FOLLOWING PARA CAN STAND ALONE FOR NEW CONSTRUCTION, BUT NEEDS EXPANSION FOR RENOVATION WORK. INCLUDE APPROPRIATE SUBPARAS BELOW FOR RENOVATION.

A. Paint exposed surfaces of all new work, except where the paint schedules or provisions of this Section indicate that a surface or material is not to be painted or is to remain natural. If the schedules do not indicate color or finish, the Architect will select from standard colors and finishes available.

1. Walls: Where walls are scheduled, include the following surfaces in addition, unless otherwise indicated:

EDIT THE LIST BELOW TO SUIT THE PROJECT. REMINDER: SCHEDULE WALLS OF NEW MECHANICAL ROOMS AND ELEVATOR SHAFTS FOR PAINTING (ON DRAWING).

a. Surfaces of wall mounted items previously painted in existing construction.
b. Exposed portions of pipes, ducts, conduit, outlet and junction boxes and convector covers (regardless of factory finish).
c. Columns, both engaged and free-standing within the scheduled area.
d. Access panels.
e. Doors and door frames.

DELETE FACSIA/SOFFIT BELOW IF INCLUDED WITH CEILING PAINT.

f. Gypsum fascia and soffits.
g. Woodwork and trim.
h. Handrails, including brackets and escutcheons.

DELETE BELOW IF NO CEILINGS SCHEDULED TO RECEIVE PAINT. NOTE: IF NEW CLGS ARE ACOUSTIC PANELS (NOT SCHEDULED TO BE PAINTED), AND SOFFITS ARE TO BE PAINTED, INCLUDE UNDER "WALLS" ABOVE OR PROVIDE SPECIAL NOTE BELOW.

2. Ceilings: Where ceilings are scheduled, include the following in addition to ceilings, unless otherwise indicated:

EDIT THE LIST BELOW TO SUIT THE PROJECT.

a. Surfaces of ceiling mounted items previously painted in existing construction.
b. Access panels.
c. Gypsum ceilings, soffits, fascia and trim.
d. Exposed portions of structural slabs.
e. Exposed interior steel and iron work.
f. Exposed portions of pipes, ducts, conduit, junction boxes.

USUALLY RETAIN BELOW.

3. Where floors are scheduled, include the following in addition to floors, unless otherwise indicated:

EDIT LIST BELOW TO SUIT PROJECT.

Base band 4-inches above finished floor.
a. Base band 6-inches above finished floor.

DELETE BELOW IF NO STAIRS.

4. Where stairwell walls are scheduled, include the following in addition to walls, unless otherwise indicated:
a. Exposed portions of stringers, risers, support brackets, tread and landing pan edges.
b. Underside of stairs, including tread and landing pans.

c. Handrails, guards and infill panels.
d. Exposed anchors and fasteners.

PARAS BELOW ARE TYPICAL PAINTING REQUIREMENTS FOR MECHANICAL. REVISE IN CONSULTATION WITH MECHANICAL ENGINEER.

B. Mechanical Work: Painting of mechanical work is limited to the following:

DELETE PARA BELOW IF NO EXTERIOR MECHANICAL ITEMS TO BE PAINTED.

1. Exterior: Unless otherwise indicated, paint the following:

LIST BELOW CONTAINS MECHANICAL ITEMS THAT MAY BE FIELD PAINTED. ADD OR DELETE ITEMS TO SUIT THE PROJECT.

a. Structural supports for mechanical equipment.
b. Mechanical equipment (except pre-finished equipment).
c. Piping (except insulated piping), pipe hangers, and supports.
d. Ductwork.
e. Accessory items.

DELETE PARA BELOW IF NO INTERIOR MECHANICAL ITEMS TO BE PAINTED.

2. Interior Occupied Areas and Stairways: Unless otherwise indicated, paint the following when exposed to view in finished construction:

LIST BELOW CONTAINS MECHANICAL ITEMS THAT MAY BE FIELD PAINTED. ADD OR DELETE ITEMS TO SUIT THE PROJECT.

a. Structural supports for mechanical equipment.
b. Mechanical equipment (except pre-finished equipment).
c. Piping (except insulated piping), pipe hangers, and supports.
d. Convector covers.
e. Ductwork.

TYPICALLY DELETE BELOW. INSULATION IS RARELY PAINTED.

f. Insulation on pipe and ductwork.
g. Accessory items.
h. Fire suppression system piping.

3. Interior Service Areas (Equipment Rooms, Mechanical Rooms, and Utility Spaces): Unless otherwise indicated, paint the following items when exposed to view in finished construction:

LIST BELOW CONTAINS MECHANICAL ITEMS THAT MAY BE FIELD PAINTED. ADD OR DELETE ITEMS TO SUIT THE PROJECT.

a. Structural supports for mechanical equipment.
b. Mechanical equipment (except pre-finished equipment).
c. Piping (except insulated piping), pipe hangers, and supports.
d. Accessory items.
e. Fire suppression system piping.

RETAIN BELOW IF FIRE SUPPRESSION (SPRINKLERS) ARE INCLUDED IN THE PROJECT.

4. Interior Spaces, Concealed Above Acoustic Ceilings: Unless otherwise indicated, paint the following:
a. Fire suppression piping, 3-inch diameter and larger.

PARA BELOW IS AN EXAMPLE OF PAINTING REQUIREMENTS FOR ELECTRICAL. DELETE IF NO PAINTING OF ELECTRICAL WORK IS INCLUDED IN PROJECT, OR REVISE TO SUIT THE PROJECT.

C. Electrical Work: Painting of electrical work is limited to the following:

1. Exterior: Unless otherwise indicated, paint the following:

REVISE THREE PARAGRAPHS BELOW AFTER CONSULTATION WITH ELECTRICAL ENGINEER. NOTE THAT INSTRUCTIONS FOR PAINTING JUNCTION BOXES FOR IDENTIFICATION PURPOSES ARE COVERED IN 16050.

   a. Structural supports for electrical equipment, including unpainted cut ends of Unistrut.

2. Interior Occupied Areas: Unless otherwise indicated, paint the following when items exposed to view in finished construction:

LIST BELOW CONTAINS ELECTRICAL ITEMS THAT ARE USUALLY FIELD PAINTED. ADD OTHER ITEMS TO SUIT THE PROJECT.

   a. Structural supports for electrical equipment.

3. Interior Service Areas (Equipment Rooms, Stairs and Utility Spaces): Unless otherwise indicated, paint the following items exposed to when view in finished construction:

LIST BELOW CONTAINS ELECTRICAL ITEMS THAT ARE USUALLY FIELD PAINTED. ADD OTHER ITEMS TO SUIT THE PROJECT.

   a. Structural supports for electrical equipment.

3.3 APPLICATION

REVISE THIS ARTICLE TO SUIT THE PROJECT. ADD SPECIAL RESTRICTIONS ON APPLICATION METHODS, IF REQUIRED.

A. General: Apply paint according to manufacturer's written instructions. Use applicators and techniques best suited for substrate and type of material being applied.

1. Paint colors, surface treatments, and finishes are indicated in the schedules.
2. Do not paint over dirt, rust, scale, grease, moisture, scuffed surfaces, or conditions detrimental to formation of a durable paint film.
3. Provide finish coats that are compatible with primers used.
4. The term "exposed surfaces" includes areas visible when permanent or built-in fixtures, convector covers, covers for finned-tube radiation, grilles, and similar components are in place. Extend coatings in these areas, as required, to maintain the system integrity and provide desired protection.
5. Paint surfaces behind movable equipment and furniture the same as similar exposed surfaces. Before the final installation of equipment, paint surfaces behind permanently fixed equipment or furniture with prime coat only.

BELOW IS OPTIONAL. CONSIDER DELETING.

6. Paint interior surfaces of ducts with a flat, nonspecular black paint where visible through registers or grilles.
7. Paint back sides of access panels and removable or hinged covers to match exposed surfaces.

8. Finish exterior doors on tops, bottoms, and side edges the same as exterior faces.

DELETE SUBPARAGRAPH BELOW IF CASEWORK IS PREFINISHED.

9. Finish interior of wall and base cabinets and similar field-finished casework to match exterior.
10. Brackets and Standards: Paint standards before installation of brackets, and allow to dry thoroughly. Paint brackets before installation on standards.
11. Sand lightly between each succeeding enamel or varnish coat.

B. Scheduling Painting: Apply first coat to surfaces that have been cleaned, pretreated, or otherwise prepared for painting as soon as practicable after preparation and before subsequent surface deterioration.

INSERT RESTRICTIONS OR LIMITS ON USE OF SPRAY EQUIPMENT IF NECESSARY TO SUIT SPECIAL PROJECT CONDITIONS.

1. The number of coats and the film thickness required are the same regardless of application method. Do not apply succeeding coats until the previous coat has cured as recommended by the manufacturer. If sanding is required to produce a smooth, even surface according to manufacturer's written instructions, sand between applications.
2. Omit primer on metal surfaces that have been shop primed and touchup painted.
3. If undercoats, stains, or other conditions show through final coat of paint, apply additional coats until paint film is of uniform finish, color, and appearance. Give special attention to ensure edges, corners, crevices, welds, and exposed fasteners receive a dry film thickness equivalent to that of flat surfaces.
4. Allow sufficient time between successive coats to permit proper drying. Do not recoat surfaces until paint has dried to where it feels firm, does not deform or feel sticky under moderate thumb pressure, and where application of another coat of paint does not cause the undercoat to lift or lose adhesion.

REVISE PARA BELOW IF THE OWNER'S REQUIREMENTS OR OTHER SPECIAL PROJECT CONDITIONS RESTRICT OR LIMIT USE OF SPRAY EQUIPMENT FOR PAINT APPLICATION. SOME OWNERS PROHIBIT OR RESTRICT THE USE OF SPRAY ON THEIR PROJECTS. SPRAY APPLICATION OF PAINTS CAN DAMAGE SENSITIVE ELECTRONIC OPERATING EQUIPMENT AND MIGHT CAUSE PROBLEMS FOR PERSONNEL IN OCCUPIED BUILDINGS.

C. Application Procedures: Apply paints and coatings by brush, roller, spray, or other applicators according to manufacturer's written instructions.

1. Brushes: Use brushes best suited for the type of material applied. Use brush of appropriate size for the surface or item being painted.
2. Rollers: Use rollers of carpet, velvet back, or high-pile sheep's wool as recommended by the manufacturer for the material and texture required.
3. Spray Equipment: Use airless spray equipment with orifice size as recommended by the manufacturer for the material and texture required. Spray apply coating to the following items:

a. Shelf standards and brackets.
b. Laboratory bench reagent shelving supports and brackets.

D. Minimum Coating Thickness: Apply paint materials no thinner than manufacturer's recommended spreading rate. Provide the total dry film thickness of the entire system as recommended by the manufacturer.

E. Block Fillers: Apply block fillers to concrete masonry block at a rate to ensure complete coverage with pores filled.

USUALLY DELETE BELOW - THIS IS INTENDED FOR ANIMAL ROOMS, BIO-HAZARD ROOMS, OR FOOD-PREPARATION AREAS WHERE PINHOLES IN CONCRETE BLOCK MUST BE ELIMINATED. INDICATE LOCATIONS ON DRAWINGS.

F. Block Filler for Special High-Build, Tile-Like Application: In indicated rooms and areas, apply block filler in accordance with manufacturer's written instructions, and the following special requirements:

1. Below-Ceiling Application: Apply multiple coats of block filler, sufficient in number to fill all voids in concrete masonry walls, in preparation for specified topcoat applications resulting in a finished surface coating that is without voids and tile-like. Apply coating using airless spray followed by back-rolling to force material into voids. Remove excess material by squeegeeing the surface. Remove excess material from masonry joints with a paint brush.

G. Prime Coats: Before applying finish coats, apply a prime coat of material, as recommended by the manufacturer, to material that is required to be painted or finished and that has not been prime coated by others. Recoat primed and sealed surfaces where evidence of suction spots or unsealed areas in first coat appears, to ensure a finish coat with no burn through or other defects due to insufficient sealing.

H. Pigmented (Opaque) Finishes: Completely cover surfaces as necessary to provide a smooth, opaque surface of uniform finish, color, appearance, and coverage. Cloudiness, spotting, holidays, laps, brush marks, runs, sags, ropiness, or other surface imperfections will not be acceptable.

DELETE FINISHES BELOW IF NONE IS IN THE PROJECT. INDICATE LOCATIONS IN THE FINISH SCHEDULES.

I. Transparent (Clear) Finishes: Use multiple coats to produce a glass-smooth surface film of even luster. Provide a finish free of laps, runs, cloudiness, color irregularity, brush marks, orange peel, nail holes, or other surface imperfections.

1. Provide satin finish for final coats.

J. Stipple Enamel Finish: Roll and redistribute paint to an even and fine texture. Leave no evidence of rolling, such as laps, irregularity in texture, skid marks, or other surface imperfections.

K. Completed Work: Match approved samples for color, texture, and coverage. Remove, refinish, or repaint work not complying with requirements.

3.4 ADJUSTING, CLEANING, PROTECTION

A. Cleanup: At the end of each workday, remove empty cans, rags, rubbish, and other discarded paint materials from the site.

DELETE SUBPARA BELOW IF FINAL CLEANING IS NOT DONE BY THE PAINTER.

1. After completing painting, clean glass and paint-spattered surfaces. Remove spattered paint by washing and scraping. Be careful not to scratch or damage adjacent finished surfaces.
2. Dispose wash water from latex paint to the sanitary sewer. Excess latex paint shall be salvaged for reuse or solidified for disposal with other construction materials. Dry empty latex paint cans and dispose with other construction materials. Contact UM OSEH Hazardous Materials (734-763-4568) to arrange for disposal of alkyd paints and solvents.

B. Protect work of other trades, whether being painted or not, against damage by painting. Correct damage by cleaning, repairing or replacing, and repainting, as approved by Architect.

C. Provide "Wet Paint" signs to protect newly painted finishes. Remove temporary protective wrappings provided by others to protect their work after completing painting operations.

1. At completion of construction activities of other trades, touch up and restore damaged or defaced painted surfaces. Comply with procedures specified in PDCA P1.

USE THE SCHEDULES BELOW AS A GUIDE ONLY. SEE MANUFACTURER'S CATALOGS OR AIABAS SECTIONS 099113 "EXTERIOR PAINTING" AND 099123 "INTERIOR PAINTING" FOR ADDITIONAL INFORMATION AND SELECTIONS, INCLUDING ODOR-FREE AND "GREEN" COATINGS.

3.5 INTERIOR PAINT SCHEDULE

A. Interior Paint Systems, General: Products of Benjamin Moore are listed below, unless otherwise indicated. Provide indicated products or, subject to compliance with requirements, equivalent products of other approved manufacturers. Apply coatings at manufacturer's recommended spreading rate to achieve indicated dry film thicknesses.

1. Where "Industrial" coating is indicated, provide Moore's "Industrial and Maintenance Coatings" products; or equivalent of other, listed approved manufacturers.
2. Where "Professional" coating is indicated, provide Moore's "Professional Coatings" products; or equivalent of other, listed approved manufacturers.

ADD COLOR INFORMATION TO EACH PRODUCT IF SCHEDULED HERE.

RETAIN ONE OF THE FOLLOWING 3 OPTIONS

B. Colors: Match colors indicated in "Schedule" articles of this Section, and as follows:

C. Colors: Match colors indicated in "Finish Schedule" on Drawings, and as follows:

IF COLORS ARE INCLUDED IN A SEPARATE DIVISION 09 ROOM FINISH SCHEDULE SECTION USE OPTION BELOW.

D. Colors: Match colors indicated in Finish Schedule Section and as follow:.

ALWAYS RETAIN BELOW

1. Fire suppression system piping: High-gloss "OSHA" red.

GENERALLY INCLUDE BELOW. NOTE THAT COLOR CODING OF PLUMBING PIPE IS NOT REQUIRED.

2. Paint uninsulated piping, ductwork and conduit to match wall or ceiling color to which it is mounted.

E. Concrete (non-wear surfaces): Provide indicated "Professional" or "Industrial" coating systems over interior concrete and brick masonry surfaces:

BELOW IS A LOW-LUSTER (EGGSHELL OR SATIN), ACRYLIC-ENAMEL FINISH OVER INTERIOR CONCRETE AND OTHER CEMENTITIOUS SURFACES.

1. Low-Luster, Acrylic Blended Latex Finish: Two finish coats over a primer.
   a. Primer Coat: Acrylic; total dry thickness 7 mils.
      1) Insl-X AquaPruf Masonry Waterproofer XA12-01.

SELECT PRIMER ABOVE OR ONE OF TWO LISTED BELOW. ABOVE FOR SEVERE MOISTURE CONDITIONS (WALLS ONLY); IT IS FROM A COMPANY OWNED BY BENJAMIN MOORE AND IS COMPATIBLE WITH BENJAMIN MOORE PRODUCTS.

   b. Primer Coat: 100% acrylic, interior primer; total dry film thickness of not less than 0.95 mils.
      1) Super Spec Masonry Sealer N066.

USE PRIMER ABOVE ON UNPAINTED CONCRETE. CONSIDER USE OF PRIMER BELOW ON PREVIOUSLY PAINTED SURFACES.

   c. Primer: Latex-based, interior primer; total dry film thickness of not less than 1.2 mils.
      1) Super Spec Latex Enamel Undercoater & Primer Sealer 253.
   d. Finish Coats: Eggshell, acrylic-latex, interior enamel; total dry film thickness of not less than 2.6 mils.
      1) Super Spec Latex Eggshell Enamel 274.
      2) Color: SELECT.

BELOW IS A SEMI-GLOSS, ACRYLIC-ENAMEL FINISH OVER INTERIOR CONCRETE AND OTHER CEMENTITIOUS SURFACES.

2. Semi-Gloss, Vinyl Acrylic Latex Finish: Two finish coats over a primer.
   a. Primer Coat: Acrylic; total dry thickness 7 mils.
      1) Insl-X AquaPruf Masonry Waterproofer XA12-01.

SELECT PRIMER ABOVE OR ONE OF TWO LISTED BELOW. ABOVE FOR SEVERE MOSITURE CONDITIONS; IT IS FROM A COMPANY OWNED BY BENJAMIN MOORE AND IS COMPATIBLE WITH BENJAMIN MOORE PRODUCTS.

   b. Primer Coat: 100% acrylic, interior primer; total dry film thickness of not less than 0.95 mils.
      1) Super Spec Masonry Sealer N066.

USE PRIMER ABOVE ON UNPAINTED CONCRETE. CONSIDER USE OF PRIMER BELOW ON PREVIOUSLY PAINTED SURFACES

c. Primer: Latex-based, interior primer; total dry film thickness of not less than 1.2 mils.
   1) Super Spec Latex Enamel Undercoater & Primer Sealer 253.

d. Finish Coats: Semi-gloss, acrylic-latex, interior enamel; total dry film thickness of not less than 2.2 mils.
   1) Super Hide Latex Semi-Gloss Enamel 283.
   2) Color: SELECT.

BELOW IS A VOC-COMPLIANT SEMI-GLOSS WATERBORNE EPOXY FINISH FOR CONCRETE AND OTHER CEMENTITIOUS SURFACES. IT PROVIDES GOOD CHEMICAL AND ABRASION RESISTANCE, GOOD CLEANABILITY AND WIDE COLOR RANGE.

3. Semi-Gloss, Acrylic Epoxy Finish: Two finish coats over a primer.
   a. Primer Coat: Acrylic; total dry thickness 7 mils.
      1) Insl-X AquaPruf Masonry Waterproofer XA12-01.

SELECT PRIMER ABOVE OR BELOW. ABOVE FOR SEVERE MOISTURE CONDITIONS; IT IS FROM A COMPANY OWNED BY BENJAMIN MOORE AND IS COMPATIBLE WITH BENJAMIN MOORE PRODUCTS.

   b. Primer Coat: 100% acrylic, interior primer; total dry film thickness of not less than 0.95 mils.
      1) Super Spec Masonry Sealer N066.
   c. Finish Coats: Semi-gloss, two-component 1acrylic epoxy coating; total dry film thickness of not less than 3.0 mils.
      1) Super Spec HP Acrylic Epoxy Coating P43-86.
      2) Color: SELECT.

BELOW IS A NON-VOC-COMPLIANT TILE-LIKE EPOXY FINISH OVER INTERIOR CONCRETE. COLOR CHOICES MAY BE LIMITED. DO NOT USE FOR MOST APPLICATIONS (SEE DESIGN GUIDELINE 099110 FOR PERMISSIBLE EXCEPTIONS). IF USING IN OCCUPIED BUILDINGS REVIEW CAREFULLY THE IMPACT ON BUILDING OCCUPANTS AND SPECIAL WORK RESTRICTIONS, DUE TO THE PRODUCTION OF TOXIC FUMES. CONSIDER OFF-HOUR APPLICATION.

4. Polyamide Epoxy High Gloss Coating: Two finish coats; no primer required
   1) Finish Coats: High gloss two-component polyamide epoxy; total dry thickness 4.0 mils.
   2) Super Spec HP Polyamide Epoxy Coating P36.
   3) Color: SELECT.

F. Concrete (wear surfaces): Provide the indicated "Industrial" coating systems over interior concrete floor surfaces:

BELOW IS A 100% SOLIDS LOW-VOC FULL-GLOSS TWO-COMPONENT WATERBORNE AMINE CURED EPOXY ENAMEL FINISH OVER INTERIOR CONCRETE FLOORS SUBJECT TO MODERATE WEAR AND CHEMICAL ATTACK. IF USING IN OCCUPIED BUILDINGS REVIEW CAREFULLY THE IMPACT ON BUILDING OCCUPANTS AND SPECIAL WORK RESTRICTIONS, DUE TO THE PRODUCTION OF TOXIC FUMES. CONSIDER OFF-HOUR APPLICATION. DELETE SAND IN TOP COAT IF SMOOTH FINISH IS DESIRED.

1. High Gloss 100% Solids Epoxy Finish: Two finish coats over an undercoat.

SELECT PRIMER BELOW FOR NEW OR UNCOATED CONCRETE AND MODIFY SENTENCE ABOVE TO DELETE REFERENCE TO AN UNDERCOAT. PREVIOUSLY PAINTED CONCRETE DOES NOT NEED A PRIMER.

a. Undercoat: Semi gloss, moisture-tolerant, waterborne polyamide epoxy sealer; total dry thickness 1.5 mils.
   1) Super Spec HP Fast Dry Epoxy Floor Sealer/Finish P41.

b. Finish Coats: Semi-gloss polyamide epoxy with sand admixture to produce light non-slip texture; total dry thickness 2.5 mils.
   1) Super Spec HP Anti-Slip Aggregate P67.
   2) Super Spec HP 100% Solids Floor Epoxy P40.
   3) Color: SELECT.

G. Concrete Masonry Units: Provide the indicated "Professional" or "Industrial" coating systems over interior concrete masonry block units:

BELOW IS A LOW-LUSTER (EGGSHELL OR SATIN), ACRYLIC-ENAMEL FINISH OVER INTERIOR CONCRETE MASONRY BLOCK UNITS.

1. Low-Luster, Acrylic-Enamel Finish: Two finish coats over a block filler for new work.

A SECOND COAT OF BLOCK FILLER MAY BE NEEDED OVER VERY COARSE CONCRETE MASONRY SUBSTRATES. MOST MFRS RECOMMEND TEST PAINTING AN INCONSPICUOUS AREA BEFORE APPLYING PAINT.

a. Block Filler (new work only): High build latex block filler; dry film thickness of not less than 8.5 mils.
   1) Super Spec Masonry Hi-Build Block Filler 206.

ABOVE PRODUCT FOR NEW OR UNCOATED MASONRY, BELOW PRIMER FOR PREVIOUSLY PAINTED SURFACES.

b. Primer (over existing painted surfaces): Acrylic-latex primer; dry film thickness of not less than 1.2 mils.
   1) Fresh Start Interior/Exterior Latex Primer 023-00.

c. Finish Coats: Low-luster (eggshell), acrylic-latex, interior enamel; total dry film thickness of not less than 2.6 mils.
   1) Super Spec Latex Eggshell Enamel 274.
   2) Color: SELECT.

2. Semi-Gloss, Vinyl Acrylic Latex Finish: Two finish coats (over a block filler for new work).

A SECOND COAT OF BLOCK FILLER MAY BE NEEDED OVER VERY COARSE CONCRETE MASONRY SUBSTRATES. MOST MFRS RECOMMEND TEST PAINTING AN INCONSPICUOUS AREA BEFORE APPLYING PAINT.

a. Block Filler (new work only): High build latex block filler; total dry film thickness of not less than 8.5 mil.
   1) SuperSpec Masonry Hi-Build Block Filler 206.

ABOVE PRODUCT FOR NEW OR UNCOATED MASONRY, BELOW PRIMER FOR PREVIOUSLY PAINTED SURFACES.

b. Primer (over existing painted surfaces): Acrylic-latex primer; dry film thickness of not less than 1.2 mils.
   1) Fresh Start Interior/Exterior Latex Primer 023-00.

c. Finish Coats: Semi-gloss, acrylic-latex, interior enamel; total dry film thickness of not less than 2.0 mils.
1) Super Hide Latex Semi-Gloss Enamel 283.
2) Color: SELECT.

BELOW IS A VOC-COMPLIANT WATERBORNE EPOXY FINISH OVER INTERIOR CONCRETE.

3. Semi-Gloss, Acrylic Epoxy Finish: Two finish coats over a primer.

TWO FINISH COATS OVER A BLOCK FILLER FOR NEW WORK.

a. Block Filler (new work only): Waterborne high solids epoxy block filler; dry film thickness of not less than 9.8 mils.
1) Waterborne Epoxy Block filler P31.

ABOVE PRODUCT FOR NEW OR UNCOATED MASONRY, BELOW PRIMER FOR PREVIOUSLY PAINTED SURFACES.

b. Primer (over existing painted surfaces): Acrylic-latex primer; dry film thickness of not less than 1.2 mils.
1) Fresh Start Interior/Exterior Latex Primer 023-00.

c. Finish Coats: Semi-gloss, two-component acrylic epoxy coating; total dry film thickness of not less than 3.0 mils.
1) Super Spec HP Acrylic Epoxy Coating P43-86.

BELOW IS A HIGH-BUILD NON-VOC COMPLIANT SYSTEM FOR ELIMINATING CMU PINHOLES AND CREATING A TILE-LIKE SURFACE. THIS SYSTEM IS ONLY APPROPRIATE FOR ANIMAL ROOMS AND BIO-HAZARD ROOMS WHERE PINHOLES ARE NOT ACCEPTABLE. IF USING IN OCCUPIED BUILDINGS REVIEW CAREFULLY THE IMPACT ON BUILDING OCCUPANTS AND SPECIAL WORK RESTRICTIONS, DUE TO THE PRODUCTION OF TOXIC FUMES. CONSIDER OFF-HOUR APPLICATION.

4. High Gloss, High-Build, Polyamide Epoxy Enamel Finish: Two finish coats over multiple coats of block filler.

CONSIDER ADDING THE "FRESH START" PRIMER IN 3B ABOVE AS A BARRIER COAT BETWEEN NEW FILLER AND PREVIOUSLY PAINTED SURFACES WHERE APPLICABLE.

a. Block Filler: Waterborne high solids epoxy block filler; dry film thickness of not less than 9.8 mils per coat.
1) Waterborne Epoxy Block Filler P31.

b. Second and Third Coats: High gloss two component polyamide epoxy enamel; total dry film thickness of not less than 4 mils.
1) Super Spec HP Polyamide Epoxy P36.
2) Color: SELECT.

H. Gypsum Board and Plaster: Provide the indicated "Professional" or "Industrial" coating systems over interior gypsum board and plaster surfaces:

BELOW IS A LOW-LUSTER (EGGSHELL OR SATIN), ACRYLIC-ENAMEL FINISH OVER INTERIOR GYPSUM BOARD WALL AND CEILING SURFACES.

1. Low-Luster, Acrylic-Enamel Finish: Two finish coats over a primer.
a. Primer: Latex-based, interior primer; total dry film thickness of not less than 1.2 mils.

1) Super Spec Latex Enamel Undercoater & Primer Sealer 253.

b. Finish Coats: Low-luster (eggshell), acrylic-latex, interior enamel; total dry film thickness of not less than 2.6 mils.
1) Super Spec Latex Eggshell Enamel 274.
2) Color: SELECT.

BELOW IS A SEMIGLOSS, ACRYLIC-ENAMEL FINISH OVER INTERIOR GYPSUM BOARD WALL AND CEILING SURFACES.

2. Semigloss, Acrylic-Enamel Finish: Two finish coats over a primer.
a. Primer: Latex-based, interior primer; total dry film thickness of not less than 1.2 mils.
1) Super Spec Latex Enamel Undercoater & Primer Sealer 253.
b. Finish Coats: Semigloss, acrylic-latex, interior enamel; total dry film thickness of not less than 2.4 mils.
1) Super Spec Latex Semigloss Enamel 276.
2) Color: SELECT.

BELOW IS A VOC-COMPLIANT WATERBORNE EPOXY FINISH WITH GOOD WATER RESISTANCE FOR APPLICATION ON INTERIOR GYPSUM BOARD WALL AND CEILING SURFACES. DO NOT USE FOR MOST APPLICATIONS (SEE DESIGN GUIDELINE 099110 FOR PERMISSIBLE EXCEPTIONS).

3. Waterborne Acrylic Epoxy Finish: Two finish coats over a primer.
a. Primer: Acrylic-latex primer; dry film thickness of not less than 1.2 mils.
1) Fresh Start Interior/Exterior Latex Primer 023-00.
b. Finish Coats: Semi-gloss, two-component acrylic epoxy coating; total dry film thickness of not less than 3.0 mils.
1) Super Spec HP Acrylic Epoxy Coating P43-86.

BELOW IS A HIGH-BUILD SYSTEM FOR ELIMINATING CMU PINHOLES AND CREATING A TILE-LIKE SURFACE. THIS SYSTEM IS ONLY APPROPRIATE FOR ANIMAL ROOMS AND BIO-HAZARD ROOMS WHERE PINHOLES ARE NOT ACCEPTABLE. IF USING IN OCCUPIED BUILDINGS REVIEW CAREFULLY THE IMPACT ON BUILDING OCCUPANTS AND SPECIAL WORK RESTRICTIONS, DUE TO THE PRODUCTION OF TOXIC FUMES. CONSIDER OFF-HOUR APPLICATION.

4. High Gloss, High-Build, Polyamide Epoxy Enamel Finish: Two finish coats over primer.
a. Finish Coats: Full-gloss polyamide epoxy enamel; total dry film thickness of not less than 4 mils.
1) Super Spec HP Polyamide Epoxy P36.
2) Color: SELECT.

I. Woodwork - Opaque Finish: Provide the indicated "Professional" paint coating systems over interior wood surfaces:

BELOW IS A LOW-LUSTER (EGGSHELL), ACRYLIC-ENAMEL FINISH OVER INTERIOR GYPSUM BOARD WALL AND CEILING SURFACES.

1. Low-Luster (Eggshell), Acrylic-Enamel Finish: Two finish coats over a wood undercoater.

a. Undercoat: Acrylic blended latex interior wood undercoater; total dry film thickness of not less than 0.8 mils.
   1) Super Hide Interior Latex Primer/Undercoater 284.
b. Finish Coats: Low-luster (eggshell), acrylic-latex, interior enamel; total dry film thickness of not less than 2.0 mils.
   1) Super Hide Latex Eggshell Enamel C286.
   2) Color: SELECT.

BELOW IS A SEMIGLOSS, ACRYLIC-ENAMEL FINISH OVER INTERIOR GYPSUM BOARD WALL AND CEILING SURFACES.

2. Semigloss, Acrylic-Enamel Finish: Two finish coats over a wood undercoater.
   a. Undercoat: Acrylic blended latex interior wood undercoater; total dry film thickness of not less than 0.8 mils.
      1) Super Hide Interior latex Primer/Undercoater 284.
   b. Finish Coats: Semi-gloss, acrylic-latex, interior enamel; total dry film thickness of not less than 2.0 mils.
      1) Super Hide Latex Semi-Gloss Enamel 283.
      2) Color: SELECT.

TYPICALLY, DELETE BELOW AND SPECIFY SHOP FINISHES IN WOODWORK OR WOOD DOOR SECTION. USE BELOW ONLY IF THERE ARE NO OTHER OPTIONS.

J. Stained Woodwork: Provide the indicated stained finishes over new, interior woodwork:

PRODUCTS BELOW ARE WATERBORNE VOC COMPLIANT FINISHES.

1. Waterborne, Low-Luster, Polyurethane: Two finish coats of solvent based, clear polyurethane over an alkyd, interior wood stain. Wipe wood filler before applying stain.

DELETE PASTE-WOOD FILLER COAT BELOW ON TIGHT-GRAINED WOOD SUCH AS BIRCH. RETAIN FILLER COAT ON OAK AND WALNUT AND SIMILAR OPEN-GRAIN WOODS.

   a. Filler Coat: Paste-wood filler.
      1) Benwood Interior Wood Finishes Wood Grain Filler 238.
   b. Stain Coat: Waterborne, interior wood stain.
      1) Benwood Interior Wood Finishes Waterborne Stain 205.
      2) Color: SELECT.
   c. First and Second Finish Coats: Waterborne, acrylic polyurethane finish.
      1) Benwood Stays Clear Low Luster N423.

BELOW IS A WATERBORNE CLEAR HIGH-GLOSS POLYURETHANE FINISH OVER INTERIOR WOODWORK STAINED WITH A WATERBORNE STAIN.

2. Waterborne, High Gloss, Polyurethane: Two finish coats of solvent based, clear polyurethane over an alkyd, interior wood stain. Wipe wood filler before applying stain.

DELETE PASTE-WOOD FILLER COAT BELOW ON TIGHT-GRAINED WOOD SUCH AS BIRCH. RETAIN FILLER COAT ON OAK AND WALNUT AND SIMILAR OPEN-GRAIN WOODS.

   a. Filler Coat: Paste-wood filler.
      1) Benwood Interior Wood Finishes Wood Grain Filler 238.

b. Stain Coat: Water base interior wood stain.
1) Benwood Interior Wood Finishes Waterborne Stain 205.
2) Color: SELECT.
c. First and Second Finish Coats: Waterborne, acrylic polyurethane finish.
1) Benwood Stays Clear Gloss N422.

TYPICALLY, DELETE BELOW AND SPECIFY SHOP FINISHES IN WOODWORK OR WOOD DOOR SECTION. USE BELOW ONLY IF THERE ARE NO OTHER OPTIONS.

K. Natural-Finish Woodwork: Provide the indicated clear finishes over new, interior woodwork:

BELOW IS A WATERBORNE CLEAR LOW-LUSTER POLYURETHANE FINISH OVER INTERIOR WOODWORK.

1. Waterborne, Low-Luster Polyurethane Finish: 2 finish coats of solvent based, clear-satin polyurethane.

DELETE PASTE-WOOD FILLER COAT BELOW ON TIGHT-GRAINED WOOD SUCH AS BIRCH. RETAIN FILLER COAT ON OAK AND WALNUT AND SIMILAR OPEN-GRAIN WOODS.

a. Filler Coat: Paste-wood filler.
1) Benwood Interior Wood Finishes Wood Grain Filler 238.
b. First and Second Finish Coats: Waterborne, acrylic polyurethane finish.
1) Benwood Stays Clear Low Luster N423.

BELOW IS A WATERBORNE CLEAR HIGH-GLOSS POLYURETHANE FINISH OVER INTERIOR WOODWORK.

2. Waterborne, High-Gloss Polyurethane Finish: 2 finish coats of waterborne, clear, high-gloss polyurethane.

DELETE PASTE-WOOD FILLER COAT BELOW ON TIGHT-GRAINED WOOD SUCH AS BIRCH. RETAIN FILLER COAT ON OAK AND WALNUT AND SIMILAR OPEN-GRAIN WOODS.

a. Filler Coat: Paste-wood filler.
1) Benwood Interior Wood Finishes Wood Grain Filler 238.
b. First and Second Finish Coats: Waterborne, acrylic polyurethane finish.
1) Benwood Stays Clear Gloss N422.

L. Ferrous Metal: Provide the indicated "Professional" or "Industrial" coating systems over factory-primed ferrous metal:

BELOW FOR A LOW-LUSTER (EGGSHELL OR SATIN), ACRYLIC-ENAMEL FINISH OVER INTERIOR FERROUS METAL.

1. Low-Luster, Acrylic-Enamel Finish: Two finish coats over a factory-applied primer, or indicated primer as applicable.
a. Primer (for factory-unprimed work): Waterborne, rust-inhibitive, acrylic primer; total dry film thickness of not less than 2.0 mils.
1) SuperSpec HP Acrylic Metal Primer P04.
b. Finish Coats: Low-luster (eggshell), acrylic-latex, interior enamel; total dry film thickness of not less than 2.6 mils.
1) Super Spec Latex Eggshell Enamel 274.
2) Color: SELECT.

BELOW IS AN ACRYLIC-LATEX-BASED, SEMIGLOSS ENAMEL FINISH OVER INTERIOR FERROUS METAL. THIS FINISH IS AN ALTERNATIVE TO SOLVENT-BASED, SEMIGLOSS ENAMELS.

2. Semigloss, Acrylic-Enamel Finish: Two finish coats over a factory-applied primer, or indicated primer as applicable.
   a. Primer (for factory-unprimed work): Waterborne, rust-inhibitive, acrylic primer; total dry film thickness of not less than 2.0 mils.
      1) SuperSpec HP Acrylic Metal Primer P04.
   b. Finish Coats: Semi-gloss, acrylic-latex, interior enamel; total dry film thickness of not less than 2.0 mils.
      1) Super Hide Latex Semi-Gloss Enamel 283.
      2) Color: SELECT.

BELOW IS A VOC COMPLIANT HIGH GLOSS WATERBORNE EPOXY FINISH OVER INTERIOR FERROUS METAL.

3. Epoxy Finish: Two finish coats over a factory-applied primer coat, or indicated primer as applicable.
   a. Primer for Factory-Unprimed Metals: Waterborne acrylic epoxy primer; total dry film thickness of not less than 2 mils.
      1) Waterborne Polyamide Epoxy Primer P42-70.
   b. Finish Coats: Full-gloss acrylic epoxy; total dry film thickness of not less than 2.0 mils.
      1) Super Spec HP Waterborne Polyamide Epoxy High Gloss Enamel P42.
      2) Color: SELECT.

M. Zinc-Coated Metal: Provide the indicated "Professional" or "Industrial" coating systems over zinc-coated metal:

WATER-BASED PRODUCTS ARE LISTED BELOW. BELOW IS A LOW-LUSTER (EGGSHELL OR SATIN), ACRYLIC-ENAMEL FINISH OVER INTERIOR GALVANIZED METAL.

1. Low-Luster, Acrylic-Enamel Finish: Two finish coats over a factory-applied primer, or indicated primer as applicable.
   a. Primer (for factory-unprimed work): Quick-drying, rust-inhibitive, acrylic-enamel primer; total dry film thickness of not less than 1.8 mils.
      1) IronClad Alkyd Low Lustre Metal and Wood Enamel 363.
   b. Second and Third Coats: Low-luster (eggshell), acrylic-latex, interior enamel; total dry film thickness of not less than 2.6 mils.
      1) Super Spec Latex Eggshell Enamel 274.
      2) Color: SELECT.

BELOW IS AN ACRYLIC-LATEX-BASED, SEMIGLOSS ENAMEL FINISH OVER INTERIOR GALVANIZED METAL. THIS FINISH IS AN ALTERNATE TO SOLVENT-BASED, SEMIGLOSS ENAMELS.

2. Semigloss, Acrylic-Enamel Finish: Two finish coats over a factory-applied primer, or indicated primer as applicable.
   a. Primer (for factory-unprimed work): Quick-drying, rust-inhibitive, alkyd-based primer; total dry film thickness of not less than 1.8 mils.
      1) IronClad Alkyd Low Lustre Metal and Wood Enamel 363.

b. Second and Third Coats: Semi-gloss, acrylic-latex, interior enamel; total dry film thickness of not less than 2.0 mils.
1) Super Hide Latex Semi-Gloss Enamel 283.
2) Color: SELECT.

BELOW IS A HIGH GLOSS WATERBORNE EPOXY FINISH OVER INTERIOR GLAVANIZED METAL.

3. Epoxy Finish: Two finish coats over a factory-applied primer coat, or indicated primer as applicable.
a. Primer (for factory-unprimed zinc-coated metal): Waterborne acrylic epoxy primer; total dry film thickness of not less than 4 mils.
1) Waterborne Polyamide Epoxy Primer P42-70.
b. Finish Coats: Full-gloss acrylic epoxy; total dry film thickness of not less than 3.0 mils.
1) Super Spec HP Waterborne Polyamide Epoxy High Gloss Enamel P42.
2) Color: SELECT.

3.6 EXTERIOR PAINT SCHEDULE

A. Exterior Paint Systems, General: Products of Benjamin Moore are listed below, unless otherwise indicated. Provide indicated products or, subject to compliance with requirements, equivalent products of other approved manufacturers. Apply coatings at manufacturer's recommended spreading rate to achieve indicated dry film thicknesses.

1. Where "Industrial" coating is indicated, provide Moore's "Industrial and Maintenance Coatings" products; or equivalent of other, listed approved manufacturers.
2. Where "Professional" coating is indicated, provide Moore's "Professional Coatings" products; or equivalent of other, listed approved manufacturers.

ADD COLOR INFORMATION TO EACH PRODUCT IF SCHEDULED HERE.

BELOW IS A FLAT VINYL ACRYLIC FINISH OVER EXTERIOR CONCRETE AND STUCCO. NOT ALL MFRS REQUIRE USE OF A PRIMER OVER THIS SUBSTRATE.

B. Concrete and Cement Plaster (for Non-Wear Surfaces): Provide the indicated "Professional" coating systems over exterior concrete, cement plaster surfaces:

1. Flat Alkyd-Modified Vinyl Acrylic Latex Finish: Two finish coats over a primer.
a. Primer: Alkali-resistant, exterior, acrylic-latex sealer; total dry film thickness of not less than 0.7 mils.
1) Acrylic Masonry Sealer 066.
b. Finish Coats: Flat, exterior, alkyd modified vinyl acrylic latex paint; total dry film thickness of not less than 2.4 mils.
1) Super Spec Flat Latex House Paint 171.
2) Color: SELECT.

C. Concrete Masonry Units: Provide the indicated "Professional" coating systems over exterior concrete masonry units:

BELOW IS A FLAT ACRYLIC FINISH OVER EXTERIOR CONCRETE MASONRY BLOCK.

1. Flat Latex Based Finish: Two finish coats over a block filler.
   a. Block Filler: High-performance, latex block filler; total dry mill thickness of not less than 8.1 mils.
      1) Super Craft Latex Block Filler 285.
   b. Finish Coats: Flat, exterior, acrylic-latex paint; total dry film thickness of not less than 2.4 mils.
      1) Super Spec Flat Latex House Paint 171.
      2) Color: SELECT.

D. Exterior Gypsum Soffit Board: Provide the indicated "Professional" coating systems over exterior gypsum soffit board:

BELOW IS A FLAT ACRYLIC FINISH OVER EXTERIOR GYPSUM SOFFIT BOARDS.

1. Flat Alkyd Modified Vinyl Acrylic Latex Finish: Two system finish coats over a primer.
   a. Primer: Exterior, alkyd primer; total dry film thickness of not less than 1.8 mils.
      1) Super Spec Alkyd Exterior Primer 176.
   b. Finish Coats: Flat, exterior, alkyd modified vinyl acrylic latex paint; total dry film thickness of not less than 2.4 mils.
      1) Super Spec Flat Latex House Paint 171.
      2) Color: SELECT.

BELOW IS A LOW-LUSTER (EGGSHELL OR SATIN) ACRYLIC FINISH OVER EXTERIOR GYPSUM SOFFIT BOARDS.

2. Low Luster Acrylic Blended Latex Finish: Two system finish coats over a primer.
   a. Primer: Exterior, alkyd primer; total dry film thickness of not less than 1.8 mils.
      1) Super Spec Alkyd Exterior Primer 176.
   b. Finish Coats: Flat, exterior, alkyd modified vinyl acrylic latex paint; total dry film thickness of not less than 2.0 mils.
      1) Super Spec Low Luster Latex House Paint 185.
      2) Color: SELECT.

E. Wood Trim: Provide the indicated "Professional" coating systems over exterior wood trim:

BELOW IS A WATER-BASED, FLAT, ACRYLIC-ENAMEL FINISH OVER EXTERIOR WOOD TRIM, INCLUDING BLEEDING WOODS SUCH AS CEDAR AND REDWOOD.

1. Flat Alkyd Modified Vinyl Acrylic Latex Finish: Two finish coats over a solvent-thinned primer.
   a. Primer: Exterior, solvent-thinned latex primer; total dry film thickness of not less than 1.4 mils.
      1) Moorwhite Primer 100.
   b. Finish Coats: Flat, exterior, alkyd modified vinyl acrylic latex paint; total dry film thickness of not less than 2.4 mils.

1) Super Spec Flat Latex House Paint 171.
2) Color: SELECT.

F. Ferrous Metal: Provide the indicated "Professional" or "Industrial" coating systems over exterior ferrous metal.

BELOW IS A LOW LUSTER, ALKYD-ENAMEL FINISH OVER EXTERIOR NON-RUSTED FERROUS METAL.

1. Low Luster, Alkyd-Enamel Finish: Two finish coats over a factory-applied primer, or an alkyd primer as applicable.
   a. Primer (unprimed work only) : Quick-drying, rust-inhibitive, alkyd-based primer, as recommended by the manufacturer for this substrate; total dry film thickness of not less than 1.3 mils.
      1) IronClad Alkyd Low Luster Metal and Wood Enamel 163.
   b. Finish Coats: Semigloss, alkyd, exterior enamel; total dry film thickness of not less than 2.6 mils.
      1) IronClad Alkyd Low Luster Metal and Wood Enamel 163.
      2) Color: SELECT.

BELOW IS A HIGH GLOSS, ALKYD-ENAMEL FINISH OVER EXTERIOR NON-RUSTED FERROUS METAL.

2. High Gloss, Alkyd-Enamel Finish: Two finish coats over a factory-applied primer, or an alkyd primer as applicable.
   a. Primer (unprimed work only) : Quick-drying, rust-inhibitive, alkyd-based primer, as recommended by the manufacturer for this substrate; total dry film thickness of not less than 1.3 mils.
      1) IronClad Alkyd Low Luster Metal and Wood Enamel 163.
   b. Finish Coats: High gloss, alkyd, exterior enamel; total dry film thickness of not less than 3.4 mils.
      1) Impervo High Gloss Enamel 133.
      2) Color: SELECT.

BELOW IS A POLYURETHANE BASED, FULL GLOSS FINISH OVER EXTERIOR FERROUS METAL. THIS IS A DURABLE, FADE-PROOF EXTERIOR COATING SYSTEM SUITABLE FOR HANDRAILS AND OTHER EXPOSED-TO-ABUSE WORK.

3. Polyurethane Finish: Two finish coats over an alkyd primer.
   a. Primer: Alkyd primer formulated with a rust-inhibiting agent; total dry film thickness of not less than 2.0 mils.
      1) Alkyd Metal Primer M06.
   b. First and Second Coats: High gloss urethane alkyd enamel; total dry film thickness of not less than 4.0 mils.
      1) Urethane Alkyd Enamel M22.
      2) Color: SELECT.

G. Zinc-Coated Metal: Provide the indicated "Professional" or "Industrial" coating systems over exterior zinc-coated (galvanized) metal surfaces:

BELOW IS A LOW-LUSTER, ALKYD-ENAMEL FINISH OVER EXTERIOR GALVANIZED METAL.

1. Low Luster, Alkyd-Enamel Finish: Two finish coats over a factory-applied primer, or a galvanized metal primer as applicable.

a. Primer (unprimed work only) : Quick-drying, rust-inhibitive, alkyd-based primer, as recommended by the manufacturer for this substrate; total dry film thickness of not less than 1.3 mils.
   1) IronClad Alkyd Low Luster Metal and Wood Enamel 163.
b. Finish Coats: Low luster, alkyd, exterior enamel; total dry film thickness of not less than 2.6 mils.
   1) IronClad Alkyd Low Luster Metal and Wood Enamel 163.
   2) Color: SELECT.

BELOW IS A HIGH GLOSS, ALKYD-ENAMEL FINISH OVER EXTERIOR GALVANIZED METAL.

2. High Gloss, Alkyd-Enamel Finish: Two finish coats over a factory-applied primer, or a galvanized metal primer as applicable.
   a. Primer (for factory-unprimed work): Quick-drying, rust-inhibitive, alkyd-based primer; total dry film thickness of not less than 1.6 mils.
      1) IronClad Alkyd Low Lustre Metal and Wood Enamel 163.
   b. Second and Third Coats: High gloss, exterior, alkyd enamel; total dry film thickness of not less than 3.4 mils.
      1) Impervo Alkyd High Gloss Metal & Wood Enamel 133.

BELOW IS A POLYURETHANE BASED, HIGH GLOSS FINISH OVER EXTERIOR FERROUS METAL. THIS IS A DURABLE, FADE-PROOF EXTERIOR COATING SYSTEM SUITABLE FOR HANDRAILS AND OTHER EXPOSED-TO-ABUSE WORK.

3. Polyurethane Finish: Two finish coats over a acrylate primer.
   a. Primer: Elastomeric acrylate primer formulated with a rust-inhibiting agent; total dry film thickness of not less than 0.1 mils.
      1) Bonding Primer M15.
   b. First and Second Finish Coats: High gloss urethane alkyd enamel; total dry film thickness of not less than 4.0 mils.
      1) Urethane Alkyd Enamel M22.
      2) Color: SELECT.

H. Aluminum: Provide the indicated "Industrial" coating system over exterior aluminum surfaces:

BELOW IS A POLYURETHANE BASED, HIGH GLOSS FINISH OVER EXTERIOR FERROUS METAL. THIS IS A DURABLE, FADE-PROOF EXTERIOR COATING SYSTEM SUITABLE FOR HANDRAILS AND OTHER EXPOSED-TO-ABUSE WORK.

1. Polyurethane Finish: Two finish coats over a acrylate primer.
   a. Primer: Elastomeric acrylate primer formulated with a rust-inhibiting agent; total dry film thickness of not less than 0.1 mils.
      1) Bonding Primer M15.
   b. Finish Coats: High gloss urethane alkyd enamel; total dry film thickness of not less than 4.0 mils.
      1) Urethane Alkyd Enamel M22.
      2) Color: SELECT.

BELOW IS A DIRECT TO METAL DUAL PURPOSE PAINT FOR EXTERIOR EQUIPMENT.

2. Acrylic Finish: Two direct to metal coats over appropriately prepared surface.

a. Surface preparation: Cleaned with Super Spec HP Oil & Grease Emulsifier (P83) to remove contaminants.
b. Direct to metal primer and finish Coats: Low luster direct to metal acrylic; total dry film thickness of not less than 4.0 mils.
    1) Super Spec HP D.T.M. Acrylic Low Lustre P25.
    2) Color: As indicated on drawings.

END OF SECTION 099100

UNIVERSITY OF MICHIGAN
ARCHITECTURE, ENGINEERING AND CONSTRUCTION

ARCHITECTURE & ENGINEERING
326 East Hoover, Mail Stop B
Ann Arbor, MI 48109-1002
Phone: 734-764-3414
Fax: 734-936-3334

BuildingName
The Description of the Project
P00000000 0000

SPECIFICATION DIVISION 9

NUMBER SECTION DESCRIPTION

DIVISION 09 FINISHES
SECTION 099110 - ELECTROSTATICALLY APPLIED COATING

END OF CONTENTS TABLE

DIVISION 09 FINISHES
SECTION 099110 - ELECTROSTATICALLY APPLIED COATING

PART 1 - GENERAL

1.1 SUMMARY

A. Extent of electrostatically applied coating is indicated on Drawings, schedules and by provisions of this Section.

B. Type of electrostatically applied coating includes field application of electrostatically charged, sprayed paint coating, over existing metal casework.

C. Colors: Color selection process is as follows:

1. Colors will be selected by Architect from manufacturer's standard range of colors.

DELETE EITHER ABOVE OR BELOW.

2. Color selections are included in "Schedule" article of this Section.

1.2 SUBMITTALS

A. Product Data: Submit manufacturer's literature including descriptive data and recommendations for mixing, application, and curing.

INCLUDE BELOW IF SELECTION WILL BE MADE AFTER BIDDING.

B. Samples for Initial Selection: Manufacturer's color sample booklet showing full range of standard colors, with not less than 25 colors.

CONSIDER INCLUDING BELOW IF EXACT COLOR MATCHING IS REQUIRED.

C. Samples for Verification: Two cards, not less than 3-inches by 5-inches, of actual paint sample of selected color. Provide additional card sets for each separate color.

1.3 QUALITY ASSURANCE

A. Provide written certification attesting that applicators have been factory trained, and that application equipment used complies with manufacturer's requirements.

1.4 DELIVERY AND STORAGE

A. Deliver materials to job site in new, original, and unopened containers bearing mfr's name, trade name, and label analysis. Store materials in protected area at a temperature not less than 50 F and in accordance with other mfr's instructions.

1.5 JOB CONDITIONS

A. Apply coatings only when environmental temperature can be maintained above 50 deg. F. during application and drying period.

B. Provide work areas free of excessive dust. and with illumination adequate to apply special coatings.

PART 2 - PRODUCTS

2.1 MANUFACTURER

A. Manufacturer: Provide products of Cascoat Electrostatic, Inc. (Telephone 313/771-9040) or, subject to compliance with requirements, equivalent products of other manufacturers.

2.2 MATERIALS

A. General: Provide coatings specifically compounded by manufacturer for electrostatic spray application. Where primers are indicated or required, provide only primers that are approved by manufacturer for use with finish coating materials.

B. Material Quality: Materials which do not display Manufacturer's identification will not be acceptable.

C. Mix, prepare, and store materials according to Manufacturer's latest printed instructions. Manually mix coating materials; power mixing devices are not permitted. Do not add thinner or other agents to coating materials.

IF COLOR WILL BE SPECIFIED IN SCHEDULE AT END OF SECTION, DELETE PARAGRAPHS BELOW.

D. Color: Provide color as follows:

1. Selected by Architect from manufacturer's standard range of colors.

RETAIN ABOVE FOR ARCHITECT SELECTION. RETAIN BELOW FOR ARCHITECT-SELECTED CUSTOM COLOR

2. Custom color to match Architect's sample.

RETAIN BELOW FOR COLOR SELECTED DURING DESIGN.

3. Match selection.

PART 3 - EXECUTION

3.1 INSPECTION

A. Examine surfaces to be coated and report any conditions that would adversely affect the appearance or performance of the coating systems and which cannot be put into an acceptable condition by specified preparation.

B. Do not proceed with surface preparation and application until the surface is acceptable or authorization to proceed is given by the Owner.

3.2 PREPARATION

A. Protect work of other trades and adjacent surfaces not scheduled to be coated. Prepare and clean in strict accordance with coating mfr's instructions.

B. Sand, or chemically clean as appropriate, all abraded surfaces, corroded areas and other imperfections in surfaces to be coated. Fill or feather edges of sanded areas to produce for a smooth transition to bare metal.

3.3 APPLICATION

A. Apply prime and finish materials in accordance with mfr's directions. Apply each material at not less that the mfr's recommended spreading rate. Use special equipment, applicators, and techniques recommended by mfr as best suited for the particular applications.

B. Apply additional coats beyond scheduled requirements when undercoating, stains or other conditions show through final paint coat until the special coating is of uniform finish, color and appearance.

3.4 CLEANING

A. Remove paint spatters from any adjoining surfaces. Repair any damage to coatings or surfaces caused by cleaning operations. Remove debris from job site and leave area clean.

3.5 SCHEDULE OF SURFACES TO BE COATED

A. Base Cabinets: Prepare and coat each of the following surfaces:

1. Surfaces exposed to view in existing construction, including all edges of doors and drawer fronts, regardless of exposure condition.

SELECT ONE OF THE FOLLOWING OR DELETE ALL.

a. Color: selection.
b. Match existing color.
c. Match color of new laboratory casework.

INCLUDE BELOW IF PAINTED INTERIORS ARE DESIRED.

2. Interior surfaces of cabinet drawers and doors, and sides, back and bottom of cabinet shell.

SELECT ONE OF THE FOLLOWING OR DELETE ALL.

a. Color: selection.
b. Match existing color.
c. Match color of new laboratory casework.

B. Wall Mounted Cabinets: Prepare and coat each of the following surfaces:

1. Surfaces exposed to view in existing construction, including all edges of doors, regardless of exposure condition.

SELECT ONE OF THE FOLLOWING OR DELETE ALL.

a. Color: selection.
b. Match existing color.
c. Match color of new laboratory casework.

MODIFY BELOW TO SUIT DESIRED LIMIT OF PAINTING. USUALLY RETAIN BELOW IF NO CABINET DOORS OR IF DOORS HAVE WINDOWS.

2. Shelves, including edges and underside.
   a. Color: Match cabinet interior surfaces.
3. Interior surfaces of cabinet doors, and sides, back and bottom of cabinet shell.

SELECT ONE OF THE FOLLOWING OR DELETE ALL.

a. Color: selection.
b. Match existing color.
c. Match color of new laboratory casework.

C. File Cabinets: Prepare and coat each of the following surfaces:

1. Surfaces exposed to view in existing location, including all edges of drawer fronts, regardless of exposure condition.

SELECT EITHER ABOVE OR BELOW.

MODIFY REQUIREMENT BELOW TO COVER ONLY THOSE SURFACES DESIRED.

2. Move file cabinets as required to expose sides and back. Coat exterior surfaces of front, sides and back of units, including all edges of drawer fronts, regardless of exposure condition.
3. Color: Provide coatings of the following color:

SELECT ONE OF THE FOLLOWING OR DELETE ALL.

a. Color: selection.
b. Match existing color.

END OF SECTION 099110

UNIVERSITY OF MICHIGAN
ARCHITECTURE, ENGINEERING AND CONSTRUCTION

ARCHITECTURE & ENGINEERING
326 East Hoover, Mail Stop B
Ann Arbor, MI 48109-1002
Phone: 734-764-3414
Fax: 734-936-3334

BuildingName
The Description of the Project
P00000000 0000

SPECIFICATION DIVISION 9

NUMBER SECTION DESCRIPTION

DIVISION 09 FINISHES
SECTION 099310 - WOOD FLOOR FINISH

END OF CONTENTS TABLE

DIVISION 09 FINISHES
SECTION 099310 - WOOD FLOOR FINISH

PART 1 - GENERAL

1.1 SUMMARY

A. This Section specifies latex polyurethane coating system for sanded wood floors, including surface preparation, prime coats and topcoats.

B. Other field painting is specified in Division 09 Section "Painting".

1.2 SUBMITTALS

A. Product data for proprietary materials including basic materials analysis and application instructions for each material specified.

B. Samples for Initial Selection: Submit three 24-inch square samples for each type of finish and color on material matching actual substrate to be coated. Carefully select substrate materials to provide samples representative of results expected to be achieved in field.

1. Match Architect's sample for color, texture, and sheen.
2. Resubmit samples as requested until desired color and sheen are achieved.

INCLUDE BELOW FOR ALL PROJECTS.

C. Affidavits of Compliance to be included in final inspection manual:

1. Provide manufacturer's letter of certification showing compliance with finish testing and classification requirements referenced by current adopted NFPA 101 "Life Safety Code".
2. Letter shall include project number, project name, and building name.

1.3 QUALITY ASSURANCE

A. Single Source Responsibility: Provide primers and undercoat materials produced by the same manufacturer as the finish coats. Use only thinners recommended by the manufacturer, and only within recommended limits.

B. Coordination of Work: Review sections in which other coatings are provided to ensure compatibility of the total systems for various substrates. Upon request, furnish information on characteristics of specified finish materials, to ensure that compatible prime coats are used.

C. Field Samples: On actual floor surface to be coated, duplicate coating finishes of approved samples. Provide full-coat finish samples on at least 100 square feet of surface, until required sheen and color are obtained; simulate finished lighting conditions for review of in-place work.

1. Final acceptance will be from job-applied samples.
2. Architect will select one room, area or surface to represent surfaces and conditions for each type of coating and substrate to be coated. Apply coatings in this room, area or surface in accordance with schedule, or as specified. After finishes are accepted, this room, area or surface will be used for evaluation of coating systems of a similar nature.

1.4 DELIVERY, STORAGE AND HANDLING

A. Packaged Materials: Deliver packaged materials in manufacturer's original, new, unopened, containers showing weight, analysis, and name of manufacturer. Protect materials from deterioration during delivery, and while stored at site.

B. Store materials not in actual use in tightly covered containers at a minimum ambient temperature of 45 deg F (7 deg C) in a well-ventilated area. Maintain containers used in storage of coatings in clean condition, free of foreign materials and residue.

1. Protect from freezing. Keep storage neat and orderly. Remove oily rags and waste daily. Take necessary precautionary measures to ensure that workmen and work areas are adequately protected from fire hazards and health hazards resulting from handling, mixing, and application of coatings.

1.5 PROJECT CONDITIONS

A. Environmental Requirements: Apply special coating materials in enclosed, conditioned spaces. Comply with manufacturer's recommendations for application temperature and humidity conditions.

PART 2 - PRODUCTS

2.1 LATEX POLYURETHANE COATING

A. Manufacturer/Product: Subject to compliance with requirements, provide the following product:

1. Pacific Plus Strong; Bunakeim.

B. Provide manufacturer's recommended catalyst hardener and stain products.

PART 3 - EXECUTION

3.1 EXAMINATION

A. Examine the substrates upon which, and conditions under which, coating will be applied for compliance with requirements of this Section. Do not proceed until unsatisfactory conditions are corrected.

1. Start of application will be construed as the Applicator's acceptance of surfaces within each area.

3.2 PREPARATION

A. General: Remove items that are not to be coated, or provide surface-applied protection prior to surface preparation and coating. Remove these items if necessary for complete coating of the items and adjacent surfaces.

1. Clean surfaces before applying coatings or surface treatments. Schedule cleaning and coating application so dust and other contaminates will not fall on wet, newly coated surfaces.

B. Surface Preparation: Perform surface preparation and cleaning in compliance with the manufacturer's instructions for the particular substrate conditions, and as specified.

1. Wood Surfaces: Clean wood surfaces of dirt, oil, or other foreign substances. Sand surfaces smooth, and dust off.
2. Sand floors 3 time using power equipment and course medium and fine grit abrasive material. Butt-end sand edges by hand to match the field and to ensure even application of finish and stain. Abrade or burnish with steel wool between coats.

C. Material Preparation: Carefully mix and prepare materials in compliance with the coating manufacturer's directions.

3.3 APPLICATION

A. Apply special coating by applicators in accordance with manufacturer's directions.

B. Apply stain in three finish coats. Do not apply succeeding coats until the previous coat has cured as recommended by manufacturer. Sand or rub with steel wool between applications where required to produce an even, smooth surface in accordance with the manufacturer's directions.

C. Completed Work: Match approved samples for color, texture, and coverage. Remove, refinish or recoat work not in compliance with specified requirements.

3.4 CLEANING

A. Clean-Up: At the end of each work day, remove rubbish, empty cans, rags and other discarded materials from the site.

B. Upon completion of work, clean spattered surfaces. Remove spattered coatings by washing, scraping, or other proper methods, using care not to scratch or damage adjacent finished surfaces. Remove temporary protective wrappings provided for protection of adjacent items not to be coated.

1. Dispose wash water from latex coatings to the sanitary sewer. Excess latex material shall be salvaged for reuse or solidified for disposal with other construction materials. Dry empty latex coating cans and dispose with other construction materials. Contact UM OSEH Hazardous Materials (734-763-4568) to arrange for disposal of alkyd paints and solvents.

3.5 PROTECTION

A. Provide "WET PAINT" signs and temporary warning tape barriers to protect newly coated finishes. Provide heavy craft paper covering to protect fully cured finishes.

3.6 TOUCH-UP AND REPAIR

A. Correct damage to caused to adjacent surfaces not to be coated by cleaning, repairing, or replacing items as acceptable to Owner.

B. Upon completion of construction activities of other trades, return to the job site and restore damaged or defaced coated surfaces.

END OF SECTION 099310

UNIVERSITY OF MICHIGAN
ARCHITECTURE, ENGINEERING AND CONSTRUCTION

ARCHITECTURE & ENGINEERING
326 East Hoover, Mail Stop B
Ann Arbor, MI 48109-1002
Phone: 734-764-3414
Fax: 734-936-3334

BuildingName
The Description of the Project
P00000000 0000

SPECIFICATION DIVISION 10

NUMBER SECTION DESCRIPTION

DIVISION 10 SPECIALTIES
SECTION 101100 - VISUAL DISPLAY UNITS

END OF CONTENTS TABLE

DIVISION 10 SPECIALTIES
SECTION 101100 - VISUAL DISPLAY UNITS

JUNE, 2005 - UPDATED TO CHANGE TO 1997 NFPA "LIFE SAFETY CODE".

PART 1 - GENERAL

1.1 SUMMARY

A. Extent of visual display boards is indicated on drawings.

EDIT THE FOLLOWING TO SUIT PROJECT.

B. Types of visual display boards include the following:

1. Chalkboards.
2. Markerboards.
3. Multi-purpose visual display units.

1.2 SUBMITTALS

A. Product Data: Submit mfr's product literature, indicating compliance with requirements.

B. Shop Drawings: Indicate elevation, sections of trim members, and installation details.

C. Samples for Initial Selection: Manufacturer's sample booklet of not less than 7 colors for porcelain enamel surfaces, and not less than 10 fabrics.

INCLUDE BELOW FOR ALL PROJECTS.

D. Affidavits of Compliance to be included in final inspection manual:

1. Provide manufacturer's letter of certification showing compliance with finish testing and classification requirements referenced by current adopted NFPA 101 "Life Safety Code".
2. Letter shall include project number, project name, and building name.

PART 2 - PRODUCTS

THE FOLLOWING IS MULTI-PURPOSE DISPLAY UNIT.

2.1 GRAPHIC PRESENTATION BOARD

A. Plastic laminate board and screen housing, and board cover doors. Self-edged plastic laminate construction, with concealed hinges, and as follows:

1. Size: 4 feet by 4 feet.
2. Accessories:
   a. Glass-beaded projection screen.

b. Markerboard and marker tray.
c. Door mounted drawing paper pads with min. 50 sheets each.

3. Manufacturer: Subject to compliance with requirements, products of one of the following:
Cig-Jan Products, Ltd.
Da-Lite.
Egan Visual.
Marsh Chalkboard Co.; Div. Marsh Lumber Co.
Polyvision Corp.

BELOW IS STANDARD MARKERBOARD UNIT FOR SPECIAL FELT TIP MARKERS.

2.2 MARKERBOARDS, PORCELAIN ENAMEL

A. Markerboards: Provide markerboard units with concealed mechanical fastening devices for wall mounting to indicated substrates, and complete with the following:

SELECT ONE OF THE FOLLOWING - "C" CHANNEL TYPE (MOST COMMON) IS USED WITH PARTICLEBOARD BACKING (MOUNTING CLIPS ATTACH TO PARTICLEBOARD). MOUNTING CLIPS WITH SNAP-ON TRIM ARE USED WITH GYPSUM BOARD BACKING.

1. Frames: Aluminum "C" channel type with concealed fasteners.
2. Frames: Mounting clip type with extruded aluminum snap-on trim.

SELECT SOLID EXTRUSION BELOW WITH "C" CHANNEL TRIM - HOLLOW TYPE IS MORE SUBSTANTIAL AND MORE EXPENSIVE.

3. Markertray: Solid aluminum extrusion type.
4. Markertray: Hollow extruded aluminum box type.

INCLUDE BELOW IF DESIRED.

5. Map Rail: Aluminum extrusion with tackable cork insert.

B. Balanced, high pressure laminated porcelain enamel markerboards of 3 ply construction consisting of facing sheet, core material, and backing.

1. Facing Sheet: Enameling steel or iron sheet with low metaloid and copper content, able to withstand temperature of over 1,400 degrees as used in coating porcelain on steel for architectural purposes, and as follows:
a. Minimum Thickness: 0.299-inch (22 gage).
b. Chemically bathe steel sheets in potassium hydroxide and sodium metal silicate solution and rinse prior to enameling.
c. Apply minimum 0.0025-inch thick spray coat of nickel cobalt primer and silica to face opposite writing surface for adhesion of laminate.
d. Aluminum and aluminized cold-rolled steel are not acceptable.
2. Markerboard Cover Coat: Mfr's special writing surface with gloss finish intended for use with erasable liquid felt tipped markers, and as follows:

a. Apply minimum 0.0025-inch thick spray coat of nickel cobalt primer to facing sheet. Writing surface to be minimum 0.003-inch thick fired porcelain frits. Panel edges at butt joints to be porcelain same as fronts. Low fired organic (paint) coated writing surfaces are not acceptable.
b. Provide final writing surface with uniform texture, with reflectance factor between 15 and 20 percent, and with not less than 6.0 hardness on Moh's Scale. Writing surface shall not become slick and shiny through normal use.

CONSULT CATALOG FOR ADDITIONAL AVAILABLE COLORS - USUAL SELECTION IS WHITE.

c. Color: White.
d. Color: Silver.
e. Color: Selected by Architect from Manufacturer's standard range.

3. Core: 1/2-inch thick gypsum board.
4. Backing Sheet: Mfr's standard aluminum foil.
5. Laminating Adhesive: Moisture-resistant, thermoplastic type.

C. Manufacturers: Subject to compliance with requirements, provide products of one of the following:

Cig-Jan Products, Ltd.
Claridge Products and Equipment, Inc.
Marsh Chalkboard Co.; Div. Marsh Lumber Co.
Polyvision Corp.

BELOW IS STANDARD CHALKBOARD.

2.3 PORCELAIN ENAMEL CHALKBOARDS

A. Chalkboards: Provide chalkboard units with concealed mechanical fastening devices for wall mounting to indicated substrates, and complete with the following:

SELECT ONE OF THE FOLLOWING - "C" CHANNEL TYPE (MOST COMMON) IS USED WITH PARTICLEBOARD BACKING (MOUNTING CLIPS ATTACH TO PARTICLEBOARD). MOUNTING CLIPS WITH SNAP-ON TRIM ARE USED WITH GYPSUM BOARD BACKING.

1. Frames: Aluminum "C" channel type with concealed fasteners.
2. Frames: Mounting clip type with extruded aluminum snap-on trim.

SELECT SOLID EXTRUSION BELOW WITH "C" CHANNEL TRIM - HOLLOW TYPE IS MORE SUBSTANTIAL AND MORE EXPENSIVE.

3. Chalktray: Solid aluminum extrusion type.
4. Chalktray: Hollow extruded aluminum box type.

INCLUDE BELOW IF DESIRED.

5. Map Rail: Aluminum extrusion with tackable cork insert.

B. Balanced, high pressure laminated porcelain enamel chalkboards of 3 ply construction consisting of facing sheet, core material, and backing.

1. Facing Sheet: 24 gage enameling steel sheet especially processed for temperatures used in coating porcelain on steel Fuse cover and ground coats to the steel at the manufacturer's standard firing temperature.
2. Exposed Face: 3 coat process (primer, ground coat and color cover coat).
3. Concealed Face: 2 coat process (primer and ground coat).
4. Proprietary Facing Sheet: At the Contractor's option, provide 24 gage, "Vitracite" porcelain enamel clad aluminized steel facing sheet, as manufactured by Claridge Products and Equipment, Inc.
5. Chalkboard Cover Coat: Mfr's standard matte finish cover coat.

SELECT FROM CHOICES BELOW OR CONSULT MANUFACTURER'S CATALOG.

a. Color: Dark Green.
b. Color: Black.
c. Color: Dark Brown.
d. Color: Selected by Architect from Manufacturer's standard range.

6. Core: Mfr's standard 3/8 inch thick particleboard core material complying with ANSI A208.1, Grade 1-M-1.
7. Backing Sheet: Mfr's standard 0.015 inch thick aluminum backing sheet.
8. Laminating Adhesive: Mfr's standard moisture-resistant, thermoplastic type adhesive.

C. Manufacturers: Subject to compliance with requirements, provide products of one of the following:

Cig-Jan Products, Ltd.
Claridge Products and Equipment, Inc.
Marsh Chalkboard Co.; Div. Marsh Lumber Co.
Polyvision Corp.

2.4 BULLETIN BOARDS

A. Bulletin Boards: Provide bulletin board units with concealed mechanical fastening devices for wall mounting to indicated substrates, and complete with the following:

SELECT ONE OF FOLLOWING.

1. Frames: Aluminum "C" channel type with concealed fasteners.
2. Frames: Incorporate bulletin boards in chalk/markerboard frames.

SELECT ONE OF THE BOARD TYPES BELOW.

B. Tackable, nominal 1/4-inch thick, resilient linoleum homogenous with integral color through board.

1. Product: Bulletin Board Cork; Forbo North America.
   a. Color: SELECT COLOR .

C. Vinyl fabric on fire retardant resilient tackable backing board; ASTM E-84, Class A.

1. Fabric: Tackboard manufacturer's standard.
   a. Fabric Pattern: Burlap.

b. Color: insert selection .

D. Polyester cloth fabric, plain weave with edges wrapped on fire retardant resilient tackable backing board; ASTM E-84, Class A.

1. Fabric Manufacturer: Guilford of Maine Div. Interface Co.
a. Color: insert selection .

E. Manufacturers: Subject to compliance with requirements, provide products of one of the following:

Cig-Jan Products, Ltd.
Claridge Products and Equipment, Inc.
Marsh Chalkboard Co.; Div. Marsh Lumber Co.
Polyvision Corp.

INCLUDE BELOW WITH EITHER CHALKBOARD OR MARKERBOARD SURFACES - MODIFY OR DELETE ALL FOR PROJECTS WITH BULLETIN BOARDS ONLY

2.5 ACCESSORIES

A. Metal Trim: 0.062 inch thick aluminum, manufacturer's standard channel size and shape; minimize number of joints. Miter corners to a neat, hairline closure.

DELETE PARAGRAPH ABOVE OR BELOW

B. Field-Applied Trim: Mfr's standard snap-on trim, with no visible screws or exposed joints.

C. Clear Anodized Finish: Mfr's standard color anodized satin finish with hardcoat anodic coating AA Class I integral Color Coating (AA-442), color as selected.

D. Chalk/Markertray: Mfr's standard continuous, box type aluminum with slanted front and cast aluminum end closures.

INCLUDE THE FOLLOWING IF MARKERBOARDS HAVE BEEN SELECTED

E. Erasable Liquid Markers: Provide a carton containing not less than 5 markers, each a different color, of type recommended by markerboard manufacturer.

2.6 FABRICATION

A. Factory assemble units with a minimum number of joints balanced about the center of units, as acceptable to the Architect.

PART 3 - EXECUTION

3.1 INSTALLATION

A. Comply with mfr's print instructions. Include grounds, clips, backing materials, brackets and anchors, trim and accessories required for a complete installation.

B. Clean units and repair or replace defective and damaged components to the satisfaction of the Architect.

END OF SECTION 101100

UNIVERSITY OF MICHIGAN
ARCHITECTURE, ENGINEERING AND CONSTRUCTION

ARCHITECTURE & ENGINEERING
326 East Hoover, Mail Stop B
Ann Arbor, MI 48109-1002
Phone: 734-764-3414
Fax: 734-936-3334

BuildingName
The Description of the Project
P00000000 0000

SPECIFICATION DIVISION 10

NUMBER SECTION DESCRIPTION

DIVISION 10 SPECIALTIES
SECTION 101400 - SIGNAGE

END OF CONTENTS TABLE

DIVISION 10 SPECIALTIES
SECTION 101400 - SIGNAGE

PART 1 - GENERAL

AN ALTERNATIVE TO THIS SECTION IS TO INCLUDE A LINE ITEM IN THE BUDGET FOR PLANT TO PROVIDE SIGNAGE FOR THE PROJECT. USING PLANT MAY RESULT IN FEWER PROBLEMS AND COST-OVERRUNS.

MAY 2007 "STANDARD" MEDICAL SCHOOL SIGN SECTION REMOVED. FOR MEDICAL SCHOOL PROJECTS, CONSULT WITH MEDICAL SCHOOL FACILITIES OFFICE. FOR RENOVATION PROJECTS, SIGNAGE IS TYPICALLY PROVIDED BY OWNER.

COORDINATE EVACUATION PLAN REQUIREMENTS WITH USER AND AEC UPO GUIDELINES (CONTACT JULIE TRUETTNER.

1.1 SUMMARY

SELECT ONE OF THE FOLLOWING.

A. Extent of signage is indicated on drawings and in schedule.

B. Extent of signage is indicated by provisions of this Section.

C. Types of signage include the following:

EDIT BELOW TO SUIT PROJECT.

1. Room number signs.
2. Room identification signs.
3. General identification signs.

1.2 SUBMITTALS

A. Shop Drawings: Indicate unit dimensions and configuration. Include schedule indicating proposed room numbers and labels.

1.3 QUALITY ASSURANCE

A. Standards: Unless otherwise indicated, comply with current edition of State of Michigan Department of Labor Building Code Rules pertaining to barrier-free signage.

PART 2 - PRODUCTS

SELECT FROM TWO TYPES INDICATED BELOW.

2.1 STAMPED METAL SIGNAGE

A. Stamped Metal Signs: Manufacturer's standard aluminum units with smooth, polished raised areas and textured black background areas and with design matching existing adjacent units.

1. Size: Match existing adjacent units.

2. Lettering: Match existing adjacent units.

SELECT ONE MOUNTING TYPE BELOW.

3. Mounting Type: Mechanically fastened.
4. Mounting Type: Adhered to substrate.

B. Manufacturer: The Supersine Company.

BELOW IS STANDARD U OF M PLASTIC SIGN.

2.2 ACRYLIC-PLASTIC SIGNAGE

A. Acrylic-Plastic Signs with Raised Copy: Supersine style "SS", as modified for University of Michigan use and as follows:

1. Faceplate: Acrylic plastic, as follows:

SELECT SIZE - USE 7-1/2 INCH SIGNS TO COORDINATE WITH 8 BY 8 SCORED CONCRETE MASONRY UNITS.

a. Size: 6 inch by 6 inch by 1/8 inch thick.
b. Size: 7-1/2 inch by 7-1/2 inch by 1/8 inch thick.

SELECT CORNER TYPE.

c. Corners: Radiused, 3/4 inch.
d. Corners: Square cut, without radius.

2. Card Slot: 2 inch by 4-3/4 inch. Omit card slot on toilet room and stair signs.
3. Back-up Plate: Clear acrylic plastic; 1/16 inch thick.
4. Letters and Numerals: 1-1/2 inch raised Helvetica face.
5. Colors: Provide units of the following colors:

REFER TO SAMPLES FOR FULL SELECTION OF COLORS AND GLOSS.

a. Faceplate: "Plexiglas P-95" or equivalent, opaque and as follows:

SELECT GLOSS BELOW.

1) Gloss: X-Gloss (flat).
2) Gloss: Gloss (polished).

SELECT COLOR BELOW.

3) Color: Black No. 2025.
4) Color: Dark Brown No. 2518.
5) Color: Blue No. 2114.

b. Letters and numerals: Opaque white.

EDIT THE FOLLOWING TO SUIT PROJECT.

2.3 FABRICATION

A. Numerals and Letters: Fabricate signs to indicate room number and suffix letter, if any, in raised numerals and letters on signs.

1. At toilet rooms indicate "MEN" or "WOMEN" and at stairway doors indicate "STAIR", all without room numbers.
2. Braille: Provide each sign with a braille message strip indicating room number or "Toilet" or "Stair" message.

PART 3 - EXECUTION

3.1 INSTALLATION

SELECT ONE OF THE FOLLOWING.

A. Mechanically mount signs with manufacturer's standard anchoring system for indicated substrate.

B. Mount with adhesive tape system adequate to hold signs of indicated size on indicated substrate material.

INCLUDE ADHESIVE BELOW IF DESIRED.

1. Apply silicone adhesive to sign back for permanent mounting.
2. Unless otherwise indicated, mount signs in corridors on latch side of doors, 5 feet above finished floor height.

3.2 SIGNAGE SCHEDULE

A. Provide one room sign at the following locations:

EDIT LIST BELOW TO BE PROJECT SPECIFIC (ROOM SIGNS, AREA OF REFUGE SIGNS, EMERGENCY EVACUATION PLANS, ETC). NOTE THAT FOR ALL NEW CONSTRUCTION AND MAJOR RENOVATION PROJECTS, EMERGENCY EVACUATION PLANS SHOULD BE INCLUDED AS PART OF INTERIOR SIGNAGE PACKAGE.

COORDINATE EVACUATION PLAN REQUIREMENTS WITH USER AND AEC UPO GUIDELINES.

1. Each new door.
2. As shown on drawings.

END OF SECTION 101400

UNIVERSITY OF MICHIGAN
ARCHITECTURE, ENGINEERING AND CONSTRUCTION

ARCHITECTURE & ENGINEERING
326 East Hoover, Mail Stop B
Ann Arbor, MI 48109-1002
Phone: 734-764-3414
Fax: 734-936-3334

BuildingName
The Description of the Project
P00000000 0000

SPECIFICATION DIVISION 10

NUMBER SECTION DESCRIPTION

DIVISION 10 SPECIALTIES
SECTION 102113 - TOILET COMPARTMENTS

END OF CONTENTS TABLE

DIVISION 10 SPECIALTIES
SECTION 102113 - TOILET COMPARTMENTS

PART 1 - GENERAL

1.1 SUMMARY

A. Extent of toilet compartments is indicated on drawings.

B. Types of toilet compartments include the following:

EDIT THE FOLLOWING TO SUIT PROJECT.

1. Floor supported.
2. Wall supported.
3. Ceiling-hung.

C. Support steel for ceiling-hung units is specified in Division 05 Section "Metal Fabrications".

1.2 SUBMITTALS

A. Product Data: Mfr's product literature indicating compliance with requirements, and installation instructions.

INCLUDE BELOW IF STATE FIRE MARSHAL WILL REVIEW PROJECT.

B. Affidavits of Compliance to be included in final inspection manual:

1. Provide manufacturer's letter of certification showing compliance with finish testing and classification requirements referenced by current adopted NFPA 101 "Life Safety Code".
2. Letter shall include project number, project name, and building name.

PART 2 - PRODUCTS

2.1 ACCEPTABLE MANUFACTURERS

A. Manufacturer: Subject to compliance with requirements, provide metal toilet partitions manufactured by one of the following:

All American Metal Corp.
Bradley Corporation
Flush-Metal Partition Corp.
Global Partitions
Hadrian Manufacturing Inc.

2.2 MATERIALS

A. Sheet Steel: ASTM A 591, Class C, galvanized-bonderized, of following minimum thicknesses:

EDIT BELOW TO SUIT PROJECT.

1. Pilasters: 18 gage.

2. Panels and Screens: 22 gage.
3. Doors: 22 gage.
4. Concealed Reinforcement for Anchorages: 12 gage.
5. Concealed Reinforcement for Tapping: 14 gage.

B. Core Materials: Mfr's standard sound-deadening, honeycomb, impregnated Kraft paper core.

C. Stirrup Brackets: Mfr's standard, non-ferrous alloy with satin chrome finish.

2.3 HARDWARE AND ACCESSORIES

A. Provide Mfr's standard, ADA compliant, heavy-duty operating hardware and accessories, non-ferrous cast alloy with satin chrome finish.

B. Anchorages and Fasteners: Mfr's standard theft-proof exposed fasteners, finish to match hardware.

2.4 FABRICATION

A. Pressure laminate face sheets to core, edges sealed with continuous locking strip or lapped and formed edges. Miter and weld corners with welds ground smooth.

1. Furnish units with cut-outs, drilled holes, and internal reinforcement to receive partition mounted hardware, accessories, and grab bars, as indicated.

B. Doors and Panels: Not less than 1 inch thick units, size shown.

1. For wall-supported units, fabricate panels of two sheets of steel with internal reinforcing to form a "V" shaped unit approximately 6 inch wide at wall edge and tapered to approximately 1 inch wide at pilaster edge.

C. Ceiling-Hung Pilasters: 1-1/4 inch thick units with galvanized steel anchorage devices for securing to overhead support. Provide 3 inch stainless steel top trim piece, finished to match hardware.

SELECT ABOVE OR BELOW.

D. Floor Mounted Pilasters: 1-1/4 inch thick units with stainless steel anchorage devices for securing to floor. Provide 3 inch stainless steel bottom trim piece, finished to match hardware.

E. Hardware and Accessories: Chromium-plated finish, unless otherwise indicated. Apply the following accessories to panels and doors, one each compartment unless otherwise indicated:

1. Hinges: Either surface-mounted or cutout inset type, Adjustable to hold door open at any angle up to 90 degrees.
2. Latch and Keeper: Recessed latch unit, with combination rubber-faced door strike and keeper.
3. Barrier-Free Latch and Keeper: At each outswinging partition door, in addition to standard hinges, coat hook and other specified hardware, provide manufacturer's standard ADA-compliant latch and keeper. In addition, provide the following:

a. Handles: Provide manufacturer's standard ADA-compiant pull handles on both the interior and exterior sides of partition doors.

4. Coat Hook and Bumper: Mfr's standard unit, rubber tipped.
5. Door Pulls: Mfr's standard, exterior of standard stall doors; and both sides of barrier-free stall doors.

F. Baked Enamel Finish: As selected from mfr's standard colors.

PART 3 - EXECUTION

3.1 INSTALLATION

A. Install partitions rigid, straight, plumb and level in accordance with mfr's printed instructions. Set units with not more than 1/2 inch between pilasters and panels, and not more than 1 inch clearances between panels and walls.

B. Hardware Adjustments: Adjust and lubricate hardware for proper operation after installation.

1. Set hinges on in-swing doors to hold doors open approximately 30 degrees from the closed position when unlatched.
2. Set hinges on out-swing doors to return to fully closed position.

C. Cleaning and Final Adjustments: Perform final adjustments to leveling devices, door hardware, and other operating parts. Clean exposed surfaces and touch up minor finish imperfections using materials and methods recommended by partition mfr.

1. Replace damaged units which cannot be satisfactorily field repaired, as directed by Architect.

END OF SECTION 102113

UNIVERSITY OF MICHIGAN
ARCHITECTURE, ENGINEERING AND CONSTRUCTION

ARCHITECTURE & ENGINEERING
326 East Hoover, Mail Stop B
Ann Arbor, MI 48109-1002
Phone: 734-764-3414
Fax: 734-936-3334

BuildingName
The Description of the Project
P00000000 0000

SPECIFICATION DIVISION 10

NUMBER SECTION DESCRIPTION

DIVISION 10 SPECIALTIES
SECTION 102213 - WIRE MESH PARTITIONS

END OF CONTENTS TABLE

DIVISION 10 SPECIALTIES
SECTION 102213 - WIRE MESH PARTITIONS

PART 1 - GENERAL

1.1 SUMMARY

A. Extent of wire mesh partitions is shown on drawings.

DELETE BELOW AND SPECIFY CYLINDERS IN THIS SECTION IF NO HARDWARE SECTION IS INCLUDED IN SPECIFICATION.

B. Lock Cylinders are included in Division 08 Section "Door Hardware".

1.2 QUALITY ASSURANCE

A. Manufacturer: Provide wire mesh partitions as complete units produced by a single manufacturer, including necessary mounting accessories and fasteners.

B. Field Measurements: Where possible, field measure prior to preparation of shop drawings. Where field measurements cannot be obtained without delay of the work, fabricate units to allow for field adjustments and fitting.

1.3 SUBMITTALS

A. Product Data: Submit manufacturer's technical data indicating compliance with requirements and manufacturer's installation instructions.

B. Shop Drawings: Submit shop drawings for fabrication and erection of wire mesh partitions. Include plans, elevations, and large scale details showing anchorage and accessory items.

PART 2 - PRODUCTS

SYSTEM SPECIFIED BELOW IS FOR STANDARD MESH PARTITIONS - TO SPECIFY SPECIAL TYPES, OR ECONOMY OR HEAVY DUTY GRADES, CONSULT MFR'S LITERATURE.

2.1 ACCEPTABLE MANUFACTURERS

A. Manufacturer: Subject to compliance with requirements, products of one of the following:

Acme.
Kentucky Metal Products Co.
Logan, Div. Spaceguard Co.
Phoenix Co.
Miller Wire Works.
Wipco, Div. Jesco Industries, Inc.
Wirecrafters Co.

2.2 MATERIALS AND FABRICATION

A. General: do not use components less than sizes indicated; use larger size components as recommended by partition manufacturer for indicated application.

SELECT COMPONENTS TO SUIT PROJECT REQUIREMENTS.

B. Mesh: 10-gage (0.135 inch) crimped steel wire woven into 1-1/2 inch mesh securely clinched to frame members.

C. Frames: Provide cutouts for pipes, ducts, beams, and other items shown or necessary for partition installation. Finish edges of cutouts to provide a neat, protective edge.

1. Vertical Members: 1-1/4 inch by 5/8 inch cold-rolled steel C-section channels with 1/4 inch bolt holes approximately 15 inches o.c.
2. Horizontal Members: 1 inch by 1/2 inch by 1/8 inch cold-rolled steel channels, mortised and tenoned to vertical members.
3. Horizontal Reinforcing Members: 1 inch by 1/2 inch by 1/8 inch cold-rolled steel channel with wire woven through, or two 1 inch by 3/8 inch channels bolted or riveted to each side of mesh, and secured to vertical members. Provide number of horizontal reinforcing members to suit panel height as recommended by partition manufacturer.

DELETE BELOW IF PARTITION HEIGHT DOES NOT EXCEED 8 FEET.

D. Stiffening Bars: For free-standing partitions over 8 feet in height, provide flat bar stiffener posts between abutting panel frames. Size as recommended by partition manufacturer for partition height required. Increase size of stiffening bars if required to maintain partition rigidity.

DELETE BELOW IF TOP TIED TO OVERHEAD CONSTRUCTION.

E. Top Capping Bars: 2-1/4 inch by 1 inch cold-rolled steel channels, secured to top framing channel with 1/4 inch U-bolts spaced not more than 28 inches o.c.

F. Corner Posts: 1-1/4 inch by 1-1/4 inch by 1/8 inch angles with 1/4 inch bolt holes to align with bolt holes in vertical frame members, and floor plate.

DELETE BELOW IF ALL CORNERS 90 DEG.

1. For other than 90 deg. intersections use manufacturer's recommended tubular corner posts and installation accessories.

G. Floor Shoes: Cast iron, sized to suit vertical framing and to provide approximately 3 inches clear space between finished floor and bottom horizontal frame members. Furnish units with set screw for leveling adjustment.

H. Sheet Metal Base: Panels formed of 16-gage steel sheet, welded or bolted to frames.

I. Hinged Door: Door frame of 1-1/2 inches by 1/2 inches by 1/8 inch channel with 1-1/4 inch by 1/8 inch flat bar cover plate on 3 sides, and matching 1/8 inch angle strike bar and cover on lock side. Provide 1-1/2 pair butt hinges welded to door and frame, and bronze mortise type cylinder lock operated by key outside and recessed knob inside. Align bottom of door with bottom of adjacent panels.

DELETE BELOW IF CYLINDERS ARE SPECIFIED IN SECTION 087100 "DOOR HARDWARE".

1. Manufacturer/Model of Cylinders: Best Co., only. Contact University of Michigan Key Office for cylinder information.

J. Sliding Door: Door frame of 1-1/2 inches by 3/4 inches by 1/8 inch channel with 1-1/2 inch by 1/8 inch flat bar cover plate on all 4 sides. Provide door with two 4-wheel roller bearing carriers, box track, bottom guide channel and bronze mortise type cylinder lock operated by key outside and recessed knob inside. Align bottom of door with bottom of adjacent panels.

DELETE BELOW IF CYLINDERS ARE SPECIFIED IN SECTION 087100 "DOOR HARDWARE".

1. Manufacturer/Model of Cylinders: Best Co., only. Contact University of Michigan Key Office for cylinder information.

K. Service Window: size as shown or, if not shown, 24 inches wide by manufacturer's standard height. Fabricate of same mesh and frames as panel units, arranged to lock in open and closed positions with spring catches.

L. Service Window Shelf: Size as shown or, if not shown, approximately 12 inches deep and 24 inches wide. Fabricate of 12-gage steel, flanged front and back, edges finished smooth, with side brackets for support.

DELETE BELOW IF NOT REQUIRED.

M. Line Posts: Where partition run exceeds 20 feet without intersection or connection to overhead framing, furnish manufacturer's standard line posts and base plates located at recommended intervals to ensure partition rigidity and stability.

MOST MANUFACTURERS LIMITED TO GRAY - SOME HAVE GREEN AND BLACK AVAILABLE. CHECK WITH MANUFACTURERS.

N. Finish: Provide manufacturer's standard shop-applied enamel finish.

1. Provide finish colors of materials for wire mesh partitions and accessories as indicated or, if not indicated, as selected by Architect from manufacturer's standard color range.

O. Provide bolts, hardware, and accessories recommended by manufacturer's printed installation instructions and as required for a complete, secure installation.

PART 3 - EXECUTION

3.1 INSTALLATION

A. Erect partitions plumb, rigid, properly aligned, and securely fastened in place, complying with drawings and manufacturer's recommendations.

B. Provide additional field bracing as shown or necessary for rigid, secure installation.

3.2 ADJUST AND CLEAN

A. Adjust moving components for smooth operation without binding.

B. Touch-up damaged finish after completion of installation using field-applied paint to match color of shop applied finish.

END OF SECTION 102213

UNIVERSITY OF MICHIGAN
ARCHITECTURE, ENGINEERING AND CONSTRUCTION

ARCHITECTURE & ENGINEERING
326 East Hoover, Mail Stop B
Ann Arbor, MI 48109-1002
Phone: 734-764-3414
Fax: 734-936-3334

BuildingName
The Description of the Project
P00000000 0000

SPECIFICATION DIVISION 10

NUMBER SECTION DESCRIPTION

DIVISION 10 SPECIALTIES
SECTION 102239 – FOLDING PANEL PARTITIONS

END OF CONTENTS TABLE

DIVISION 10 SPECIALTIES
SECTION 102239 – FOLDING PANEL PARTITIONS

1.1 SUMMARY

A. This Section includes manually operated, acoustically rated assemblies, consisting of the following:

SELECT APPROPRIATE TYPE BELOW, USUALLY CONTINUOUS SEQUENCE.

1. Individual, unlinked panels.
2. Panels hinged in pairs.
3. Panels hinged in continuous sequence.

B. Related Sections: The following sections contain requirements that relate to this Section:

1. Division 05 Section "Metal Fabrications" for miscellaneous framing and supports.
2. Plenum barriers are specified in Division 09 Section “Gypsum Board Assemblies”

1.2 SUBMITTALS

A. Product data on physical characteristics, durability, resistance to fading, and flame spread characteristics for each type of folding fabric partition and accessory specified.

B. Shop drawings showing location and extent of folding panel partitions. Include plans, elevations, large-scale details of anchorages, and accessory items. Indicate unit conditions at openings, typical and special details, and location and installation requirements for hardware. Indicate direction of travel and static and dynamic loading on the building structure.

C. Template drawings prepared by manufacturer showing location of items supported or anchored by permanent construction.

D. Samples for verification purposes of each type of material exposed to view. Include samples of each panel facing material selected.

E. Acoustical Certification from an independent testing agency stating that product and materials furnished comply with specified requirements. Include certified laboratory testing data indicating that panels and materials meet specified test requirements. Include STC and NRC ratings and square foot weight of panel.

F. Affidavits of Compliance to be included in final inspection manual:

1. Provide manufacturer's letter of certification showing compliance with finish testing and classification requirements referenced by current adopted NFPA 101 "Life Safety Code".
2. Letter shall include project number, project name, and building name.

1.3 SYSTEM PERFORMANCE REQUIREMENTS

A. Acoustical Performance: Provide folding panel partitions tested by independent testing laboratory acceptable to Owner, for the following acoustical properties, according to the test methods indicated:

1. Sound Transmission Requirements: Folding panel partition assembly tested in a full-scale opening (14 feet by 9 feet) for laboratory sound transmission loss performance in accordance with ASTM E 90, determined by ASTM E 413 and rated for a STC plus or minus 1 as indicated:

INSERT APPLICABLE RATING.

2. Sound Transmission Class (STC): 49.
3. Noise Reduction Requirements: Folding panel partition assembly tested by a qualified independent laboratory for compliance with ASTM C 423 and rated for a NRC as indicated:

INSERT APPLICABLE RATING.

a. Noise Reduction Coefficient (NRC): INSERT .

1.4 QUALITY ASSURANCE

A. Single-Source Responsibility: Provide units and accessories of a single manufacturer.

1.5 DELIVERY, STORAGE AND HANDLING

A. Deliver materials to project site in original factory wrappings and containers, clearly labeled with identification of manufacturer, brand name, quality or grade, and lot number.

B. Store panels only on edge, blocked off ground to prevent sagging and warping in original undamaged packages and containers, inside well-ventilated area protected from weather, moisture, soiling, extreme temperatures, and humidity.

C. Comply with instructions and recommendations of manufacturer for special delivery, storage, and handling requirements.

PART 2 - PRODUCTS

2.1 MANUFACTURERS

A. Manufacturers: Subject to compliance with requirements, provide products of one of the following:

Foldoor/Holcomb and Hoke Mfg. Co.
Hufcor, Inc. (Hough Mfg. Corp.)
Modernfold, Inc.
Panelfold, Inc.

2.2 PANEL CONSTRUCTION

A. Face Sheets: Top reinforcing as required to support suspension components. Internal insulation as required to achieve specified acoustical rating.

THE FOLLOWING VARY WITH MANUFACTURER - CONSULT AIA MASTERSPEC FOR GENERIC MINIMUM VALUES.

1. Face Sheets for Steel Frames: Minimum 0.838 inch (21 gage) cold-rolled steel welded to minimum 1.390 inch (16 gage) steel channel frame, factory-fabricated panels, free of joints in faces.
2. Panel Thicknesses: 3 inches.
3. Panel Weight: 12 psf maximum as determined by panel construction, surface covering, and accessories.
4. Hardware: Manufacturers standard, finished to match exposed hardware on partition.

2.3 SUSPENSION SYSTEMS

A. Carriers: Four wheel at lead post and two wheel at intermediate spacing as required for size and weight of partition for ease of operation.

B. Suspension Tracks: Heavy-duty steel or aluminum, with overhead supports of adjustable steel hanger rods; heavy-duty, ball-bearing, trolley system supports specifically designed for use with size and type folding panel partition assembly indicated. Track deflection independent of structural support system no more than 1/360th of opening width.

2.4 FINISH SURFACE

A. Finish Face: Manufacturer's standard primed steel.

B. Materials: Manufacturer's standard mildew resistant vinyl, complying with FS CCC-W-408A for Type 1 material.

2.5 POSTS AND SEALS

A. Lead posts and jamb posts formed to provide rigidity for partition and light seal at adjacent construction.

1. Post Type: Floating or attached multiple meeting post with 2-way meeting arrangements.

B. Sound Seals: Perimeter sweep strips for each side, top, and bottom; providing continuous contact with head and sill surfaces for positive light and sound seal. Include manufacturer's standard male and female sound and light seal at lead posts and jambs.

C. Vertical Seals: Deep nesting, interlocking astragals with continuous vinyl acoustical seal.

D. Horizontal Top Seals: continuous contact extruded vinyl or mechanical retractable vinyl-faced seal exerting positive pressure on track when extended.

E. Horizontal Bottom Seals: Retractable seal exerting positive pressure downward assuring horizontal and vertical sealing and resisting panel movement. Minimum clearance between retractable seal and floor finish shall be 1 inch.

1. Extension/retraction of bottom seal by operating handle or built-in operating mechanism. Holes in panel faces not permitted. Include 2 handles per partition.

F. Final Closure: Positive mechanical closure expanding from panel edge to create positive acoustical seal.

1. Type: Jamb hinged closure.

PART 3 - EXECUTION

3.1 EXAMINATION

A. Examine flooring for compliance with requirements for installation tolerances and other conditions affecting performance of folding partitions. Do not proceed with installation until unsatisfactory conditions have been corrected.

3.2 INSTALLATION

A. Install folding panel partitions and accessories in compliance with ASTM E 557 after other finishing operations including painting, have been completed.

B. Install folding panel partitions in conformance with drawings and approved shop drawings and in strict compliance with manufacturer's written installation instructions.

C. Match folding panel partitions for color and pattern by installing partitions from cartons in same sequence as manufactured and packaged, if so numbered. Broken, cracked, chipped or deformed partitions are not acceptable.

D. Repair or replace folding panel partitions within areas where test results indicate partitions do not comply with requirements and retest partitions.

3.3 ADJUSTING

A. Lubricate bearings and sliding parts; adjust to ensure smooth, easy operation.

3.4 CLEANING

A. Clean all folding partition surfaces and clean adjacent surfaces soiled by work of this section. Avoid use of abrasive cleaners or solutions containing corrosive solvents. Use cleaning materials recommended by manufacturer.

END OF SECTION 102239

UNIVERSITY OF MICHIGAN
ARCHITECTURE, ENGINEERING AND CONSTRUCTION

ARCHITECTURE & ENGINEERING
326 East Hoover, Mail Stop B
Ann Arbor, MI 48109-1002
Phone: 734-764-3414
Fax: 734-936-3334

BuildingName
The Description of the Project
P00000000 0000

SPECIFICATION DIVISION 10

NUMBER SECTION DESCRIPTION

DIVISION 10 SPECIALTIES
SECTION 102800 – TOILET AND BATH ACCESSORIES

END OF CONTENTS TABLE

DIVISION 10 SPECIALTIES
SECTION 102800 – TOILET AND BATH ACCESSORIES

REVISION HISTORY:

SEPT. 04 - UPDATED MANUFACTURERS AND CHANGED TOILET PAPER AND PAPER TOWEL DISPENSERS PRODUCT INFO. TO REFLECT THAT THESE ARE PROVIDED BY OWNER.

APRIL 05 - ADDED DIAPER CHANGING STATIONS.

MAY 07 - CHANGED SOAP DISPENSER PRODUCT INFO. TO REFLECT THAT THESE ARE PROVIDED BY OWNER.

PART 1 - GENERAL

GENERAL EDITING / COORDINATION NOTES:

TOILET PAPER, PAPER TOWEL, AND SOAP DISPENSERS ARE TYPICALLY PROVIDED BY BUILDING SERVICES FOR CONTRACTOR INSTALLATION. THIS ASSURES THAT UNIT SUPPLIED IS COMPADIBLE WITH PAPER / SOAP PRODUCTS PURCHSED FOR MAINTENANCE. IF OTHER UNITS ARE SELECTED, COORDINATE WITH DESIGN MANAGER TO COMMUNICATE MAINTENANCE REQUIREMENTS TO USER.

USING OWNER SUPPLIED UNITS DOES NOT ALLEVIATE ARCHITECT OF THE RESPONSIBILITY TO COORDINATE WALL MOUNTED ITEMS WITH ALL ADA REQUIREMENTS AND COMMUNICATING THOSE INSTALLATION REQUIREMENTS TO THE CONTRACTOR.

CATALOG NUMBERS USED IN THIS SECTION DO NOT REPRESENT AN EXHAUSTIVE LISTING OF ALL POSSIBLE UNITS. CONSULT MANUFACTURERS CATALOG WHEN EDITING THIS SECTION.

1.1 SUMMARY

A. Extent of toilet accessories is shown on drawings.

B. Types of toilet accessories include the following:

EDIT BELOW TO SUIT PROJECT.

Grab bars.
Soap dispensers.
Toilet paper dispenser.
Paper roll towel dispenser.
Electric hand dryers
Fold-down shower seats.
Shower curtain rods.
Sanitary napkin/tampon dispensers.
Folding purse shelf.
Sanitary napkin/tampon disposal units.
Stainless steel shelves.
Janitorial utility shelves.
Mirror units.

C. Waste paper baskets are included in Division 12 Section "Furnishing Accessories."

D. For accessories noted in Products section as provided by Owner, coordinate with Owner's Representative to obtain from UM Plant Building Services.

1.2 SUBMITTALS

A. Product Data: Submit mfr's literature indicating compliance with requirements, and installation instructions.

PART 2 - PRODUCTS

2.1 ACCEPTABLE MANUFACTURERS

A. Manufacturer: Subject to compliance with requirements, provide products of one of the following:

1. Toilet Accessories:
American Specialties, Inc.
Bobrick Washroom Equip., Inc.
Bradley Corp.
Elcoma Metal Fabricating (grab bars and shower seats only).
Gamco (except for shower seats and counter soap dispensers)
Koala Kare Products, a division of Bobrick

2.2 TOILET ACCESSORIES

A. General: Provide toilet accessories as indicated or scheduled. Install units at locations and heights as indicated, plumb and level, firmly anchored, in accordance with mfr's instructions.

2.3 MATERIALS

A. Stainless Steel: AISI Type 3-2/304, with polished No. 4 finish, 22 gage minimum, unless otherwise indicated.

B. Fasteners: Screws, bolts, and other devices of same material as accessory unit or of galvanized steel where concealed.

2.4 FABRICATION

A. General: Stamped names or labels on exposed faces of toilet accessory units are not permitted. Wherever locks are required for particular type of accessory, provide same keying throughout project. Furnish two keys for each lock, properly identified.

B. Surface-Mounted Accessories: Fabricate units with tight seams and joints, exposed edges rolled. Hang doors or access panels with continuous piano hinge or minimum of two 1-1/2 inch long pin hinges of same metal as unit cabinet.

DELETE ABOVE OR BELOW OR RETAIN BOTH TO SUIT PROJECT.

C. Recessed Accessories: Fabricate units of all welded construction, without mitered corners. Hang doors or access panels with full-length stainless steel piano hinge. Provide anchorage which is fully concealed when unit is closed.

2.5 GRAB BARS

NOTE: ICC/ANSI A117.1 2003 REQUIRES BOTH VERTICAL AND HORIZONTAL BARS.

PART NUMBER LISTED BELOW IS A SERIES NUMBER AND IS AVAILABLE IN MULTIPLE CONFIGURATIONS AND LENGTHS. PROVIDE ELEVATIONS ON DRAWINGS SHOWING CONFIGURATION, TYPES OF BARDS, LOCATIONS, AND MOUNTING HEIGHTS. COORDINATE WITH TOILET PAPER DISPENSER AND OTHER WALL MOUNTED ITEMS IN ROOM / STALL.

A. Provide stainless steel grab bars with wall thickness not less than 18 gage and as follows:

1. Mounting: Concealed.
2. Gripping Surface: Manufacturer's standard non-slip texture.
3. Size: Outside diameter 1-1/2 inch by dimensions indicated.
4. Product: Bobrick B-6806 series of configuration and dimensions shown; or, subject to compliance with requirements, equivalent products of other approved mfrs.

2.6 WALL MOUNTED SOAP DISPENSERS

WALL MOUNTED SOAP DISPENSERS ARE PROVIDED BY BLDG. SERVICES FOR INSTALLATION BY THE CONTRACTOR. ARCHITECT IS RESPONSIBLE TO VERIFY COMPLAINCE WITH PROJECT REQUIREMENTS AND PROVIDE INSTALLATION INFORMATION, INCLUDING MOUNTING HEIGHTS AND LOCATIONS. PM ORDERS DURING CONSTRUCTION. THE FOLLOWING IS STANDARD MODEL FROM SPARTAN:

FOAM DISPENSER (ADA COMPLIANT IF PROPERLY LOCATED): 9756

A. Wall mounted liquid soap dispensers are provided by Owner for installation by Contractor.

2.7 COUNTER-MOUNTED SOAP DISPENSERS

OPTIONS FOR UNIT BELOW INCLUDE POLISHED BRASS COVER AND SPOUT, 4-INCH LONG SPOUT, AND 20-OZ. RESEVOIR. SEE CATALOG FOR APPROPRIATE MODEL NUMBER.

NOTE THAT BUILDING SERVICES DOES NOT FILL UNITS THAT THEY DO NOT SUPPLY.

A. Liquid soap dispenser for counter mounting, complete with 4-inch long shank, and optional 6-inch spout. Capable of filling from top. Stainless steel spout/cover and 34 oz. capacity polyethylene reservoir. Provide units with matching stainless above-counter shank extension if required to suit application.

1. Product: Bobrick B-8226; or, subject to compliance with requirements, equivalent products of other approved mfrs.

2.8 TOILET PAPER DISPENSERS

TOILET PAPER DISPENSERS ARE PROVIDED BY BLDG. SERVICES FOR INSTALLATION BY THE CONTRACTOR. ARCHITECT IS RESPONSIBLE FOR SELECTING UNITS FROM BELOW THAT MEET PROJECT AND ADA REQUIREMENTS AND COMMUNICATING SELECTIONS TO DM / PM. ARCHITECT IS ALSO RESPONSIBLE FOR PROVIDING INSTALLATION INFORMATION, INCLUDING MOUNTING HEIGHTS AND LOCATIONS. PM ORDERS DURING CONSTRUCTION. THE FOLLOWING ARE STANDARD MODELS FROM KIMBERLY-CLARK:

JUMBO JRT CORED DISPENSER (TYPICAL PREFERRED TYPE, 2 ROLLS SIDE BY SIDE): 09551 -- 1 OF THE 2 ROLLS CAN BE ADA COMPLIANT IF PROPERLY LOCATED

CORELESS JRT (2 ROLLS SIDE BY SIDE - USE ONLY IF STANDARD PAPER IN BUILDING IS CORELESS, NOT TYPICAL): 09608 -- 1 OF THE 2 ROLLS CAN BE ADA COMPLIANT IF PROPERLY LOCATED

STACKED DOUBLE ROLL DISPENSER (NOT RECOMMNEDED IN PUBLIC RESTROOMS, ADA COMPLIANT IF PROPERLY LOCATED): 09021

A. Toilet paper roll dispensers are provided by Owner for installation by Contractor.

2.9 PAPER ROLL TOWEL DISPENSER

PAPER TOWEL DISPENSERS ARE PROVIDED BY BLDG. SERVICES FOR INSTALLATION BY THE CONTRACTOR. ARCHITECT IS RESPONSIBLE FOR SELECTING UNITS FROM BELOW THAT MEET PROJECT AND ADA REQUIREMENTS AND COMMUNICATING SELECTIONS TO DM / PM. ARCHITECT IS ALSO RESPONSIBLE FOR PROVIDING INSTALLATION INFORMATION, INCLUDING MOUNTING HEIGHTS AND LOCATIONS. PM ORDERS DURING CONSTRUCTION. THE FOLLOWING ARE STANDARD MODELS FROM KIMBERLY-CLARK:

ROLL TOWEL DISPENSER (LEVER HANDLE OPERATED, ADA COMPLIANT IF PROPERLY LOCATED): 09736

TOUCH FREE DISPENSER (MECHANICAL UNIT, NOT ADA COMPLIANT): 09990

NOTE 10-1/2" DEPTH AND COORDINATE WITH ADA REQUIREMENTS.

A. Paper roll towel dispensers are provided by Owner for installation by Contractor.

2.10 ELECTRIC HAND DRYERS

REMOVED DISCONTINUED PRODUCT PREVIOUSLY LISTED. A&E IS REVIEWING POTENTIAL MODELS FOR INCLUSION IN THIS SECTION. CONSIDER ADA COMPLIANCE, NOISE, DRY TIME, AND AIR DISTRIBUTION PATTERN WHEN SELECTING DEVICES. USER EXPERIENCE IN OTHER BUILDINGS HAVE INDICATED THAT DRIERS IN THE 80-90 DBA RANGE ARE TOO LOUD AND SOME AIR DISTRIBUTION PATTERNS CAUSE MAINTENANCE PROBLEMS ON THE ADJACENT WALLS.

NOTE THAT BUILDING SERVICES DOES NOT PROVIDE ELECTRIC HAND DRIERS.

2.11 SHOWER SEAT

A. Padded, fold-down seat constructed with Type 304 stainless steel framing and with self-locking mechanism. For units on wood stud framing, provide concealed backing at screw points.

1. Product: Bobrick B-517 (right hand) or B-518 (left hand) as indicated; or subject to compliance with requirements, equivalent products of other approved mfrs.

2.12 SHOWER CURTAIN ROD

A. Extra-heavy-duty; 18-gauge type 302 stainless steel tubing with satin finish; 1-1/4 inch outside diameter; 1/8 inch thick die-cast, single piece flange; length as shown on drawings, or if not shown, 36 inches.

1. Product: Bobrick B-6047; or subject to compliance with requirements, equivalent products of other approved mfrs.

INCLUDE BELOW IF DESIRED BY CLIENT. NOTE THAT THEY ARE NOT MAINTAINED BY PLANT BUILDING SERVICES.

2.13 SANITARY NAPKIN/TAMPON DISPENSERS

A. General: Type 304 stainless steel construction; minimum 22 gage cabinet and 18 gage door. Return door edges and equip with tumbler lockset. Provide graphic identification indicating "Napkins" and "Tampons" at coin slots; brand name advertising is not allowed. Capacity not less than 30 napkins and 20 tampons.

1. Coin mechanism: 25-cent coin operation, with locked coin box keyed separately. Wrong coins by-pass mechanisms and drop into product tray. Provide graphic showing indicated coin denomination.
   a. Cost: 25-cents
2. Operation: ADA compliant push button dispensing. All operations shall be mechanical.

BELOW FOR RECESSED UNITS (REQUIRES FULL 4 TO 5-1/2 INCH DEEP CAVITY). UNIT BELOW IS ADA COMPLIANT IF LOCATED PROPERLY.

3. Product: Bobrick B-3706 series (recessed or semi-recessed); or, subject to compliance with requirements, equivalent products of other approved mfrs.

BELOW FOR SURFACE MOUNTED UNITS. UNIT BELOW PROTRUDES FROM WALL 8" AND IS NOT ADA COMPLIANT IF LOCATED ALONG A PATH OF TRAVEL.

4. Product: Bobrick B-2706 (surface mounted); or, subject to compliance with requirements, equivalent products of other approved mfrs.

2.14 FOLDING PURSE SHELF

A. Shelf and bracket fabricated of heavy cast Zamak with bright chrome plated finish, for partition mounting.

1. Product: Bobrick B-287; or, subject to compliance with requirements, equivalent products of other approved manufacturers.

2.15 SANITARY NAPKIN/TAMPON DISPOSAL UNITS

COORDINATE WITH OTHER WALL MOUNTED ITEMS, PARTICULARLY IN ACCESSIBLE STALLS / ROOMS.

A. Type 304 stainless steel construction, with piano-hinged door.

BELOW FOR PARTITION MOUNTED UNITS

1. Product: Bobrick B-354 (double sided, for through-partition mounting); or, subject to compliance with requirements, equivalent products of other appoved mfrs.

BELOW FOR WALL MOUNTED UNITS. SELECT RECESSED OR SURFACE MOUNTED UNITS AS APPLICABLE. MAINTENANCE PREFERS RECESSED WHENEVER POSSIBLE.

2. Product: Bobrick B-353 (recessed); or, subject to compliance with requirements, equivalent products of other approved mfrs.
3. Bobrick B-254 (surface mounted); or, subject to compliance with requirements, equivalent products of other approved mfrs.

2.16 STAINLESS STEEL SHELVES

A. Type 304 stainless steel construction, 18 gauge thickness with polished satin finish. Pan type construction with edges turned down not less than 3/4 inches on all sides; and complete with integrally welded stainless steel brackets at manufacturer's standard spacing.

1. Depth: 6 inches.

LENGTHS FROM 16 INCHES TO 96 INCHES AVAILABLE IN 2-INCH INCREMENTS - CONSULT CATALOG.

2. Length: 24 [SPECIFY OTHER] inches.
3. Product: Bobrick B-296 series; or, subject to compliance with requirements, equivalent products of other approved mfrs.

2.17 JANITORIAL UTILITY SHELVES

A. Type 304 stainless steel construction, 18 gauge thickness with polished satin finish; 8-inch depth. Pan type construction with edges turned down not less than 1-1/2 inches on all sides, and complete with rag bar, rag hooks, mop hooks, and integrally welded stainless steel brackets.

1. Length: 30 inches; not less than 3 mop holders and 2 rag hooks.
2. Length: 36 inches; not less than 4 mop holders and 3 rag hooks.
3. Length: 48 inches; not less than 6 mop holders and 5 rag hooks.
4. Product: Bobrick B-224 series; or, subject to compliance with requirements, equivalent products of other approved mfrs.

2.18 MIRRORS

A. Provide framed glass mirror units of standard or custom sizes as indicated, and as follows:

1. Frames: Provide glass mirror units with UNS 30302/30304 stainless steel channel frames, 1/2-inch by 1/2-inch, no. 4 finish, and with mitered corners.

BELOW IS TEMPERED GLASS. ANNEALED AND LAMINATED ARE ALSO AVAILABLE. CONSIDER LESS EXPENSIVE ANNEALED GLASS ALTERNATIVE FOR NON-STUDENT, NON-PUBLIC AREAS.

2. Mirror: Provide units with 1/4 inch thick tempered glass, Type I, Class 1, Quality q2, conforming to FS DD-G-451, with silvering, copper coating, and protective organic coating complying with FS DD-M-411.

DELETE BELOW IF NO STAINLESS STEEL MIRRORS. USE WHERE SECURITY OR IMPACT DAMAGE ARE CONSIDERATIONS.

3. Mirror: Bright polished, 22 gage, UNS 51430 stainless steel sheet.

DELETE BELOW IF NO SHELF. SHELF TYPICALLY CONFLICTS WITH FAUCETS WHEN MIRRORS ARE SET AT ADA HEIGHT.

4. Mirror Shelf: Where indicated on drawings, provide 4 inch deep, satin finished stainless steel units, full length of mirror.

B. Product: Provide the following product, or equivalent products of other approved manufacturers:

1. Bobrick B-165 series.

DELETE BELOW IF NO SHELF.

2. Bobrick B-166 series (with shelf.)

VERTICAL WALL MOUNTED BABY CHANGING STATION ALSO AVAILABLE FOR TIGHT SPACES. SEE MANUFACTURER'S CATALOG. HORIZONTAL MODEL PREFERRED.

2.19 DIAPER-CHANGING STATION:

A. Description: Horizontal unit that opens by folding down from stored position and with replaceable child-protection strap.

1. Engineered to support a minimum of 250-lb static load when opened.
2. Comply with ASTM F2285 Standard Consumer Safety Performance Specification for Commercial Use.

B. Mounting: Surface mounted, with unit projecting not more than 4 inches from wall when closed.

C. Operation: By pneumatic shock-absorbing mechanism.

SELECT ONE OF THE FOLLOWING MATERIALS. STAINLESS IS MORE EXPENSIVE BUT MORE DURABLE - CONSIDER IN HIGH USE AREAS.

D. Material and Finish: Stainless steel, No. 4 finish (satin), with replaceable insulated polystyrene tray liner and rounded plastic corners.

E. Material and Finish: Blow-molded high-density polyethylene, cream color, with antimicrobial additive, with reinforce full length steel-on-steel hinge and 11 gauge steel mounting plates.

F. Liner Dispenser: Built in.

G. Manufacturers: Subject to compliance with requirements, provide products by one of the following:

1. Brocar Products, Inc.
2. Koala Care Products, a division of Bobrick.
3. Synergy Management.

PART 3 - EXECUTION

3.1 INSTALLATION

A. General: Install toilet accessory units in accordance with mfr's instructions, using fasteners appropriate to substrate and recommended by mfr of unit. Install units plumb and level, firmly anchored in locations indicated. Secure mirrors to walls in tamperproof manner with special hangers, toggle bolts, or screws.

B. Adjust toilet accessories for proper operation and verify that mechanisms function smoothly.

C. Clean and polish all exposed surfaces after removing protective coatings. Clean exposed surfaces of mirror units in compliance with mfr's recommendations.

CONSIDER INCLUDING THE SCHEDULE BELOW IF HELPFUL.

3.2 SCHEDULE

A. In each toilet room marked "Men's Toilet" on plans, provide the following toilet accessory units:

1. Grab Bars: Configuration as shown in toilet marked "Handicap".
2. Soap Dispenser: 1 at each sink.
3. Toilet Paper Dispenser: 1 in each toilet stall.
4. Paper Roll Towel Dispenser: 1 within room.
5. Stainless Steel Shelf: 1 within room.
6. Mirror Units: 1 over each sink.

IF DESIRED BY CLIENT, ADD DIAPER CHANGING STATION.

7. Diaper Changing Station: 1 within room.

B. In each toilet room marked "Women's Toilet" on plans, provide the following toilet accessory units:

1. Grab Bars: Configuration as shown in toilet marked "Handicap".
2. Soap Dispenser: 1 at each sink.
3. Toilet Paper Dispenser: 1 in each toilet stall.
4. Paper Roll Towel Dispenser: 1 within room.
5. Sanitary Napkin/Tampon Dispenser: 1 within room.

6. Folding Purse Shelf: 1 in each toilet stall.
7. Sanitary Napkin Receptacles: As indicated on drawings, but with access to one in each toilet stall.
8. Stainless Steel Shelf: 1 within room.
9. Mirror Units: 1 over each sink.

IF DESIRED BY CLIENT, ADD DIAPER CHANGING STATION.

10. Diaper Changing Station: 1 within room.

C. In each room marked "Janitor's Closet" on plans, provide the following toilet accessory units:

1. Janitorial utility shelves: 1 unit within room.

END OF SECTION 102800

UNIVERSITY OF MICHIGAN
ARCHITECTURE, ENGINEERING AND CONSTRUCTION

ARCHITECTURE & ENGINEERING
326 East Hoover, Mail Stop B
Ann Arbor, MI 48109-1002
Phone: 734-764-3414
Fax: 734-936-3334

BuildingName
The Description of the Project
P00000000 0000

SPECIFICATION DIVISION 10

NUMBER SECTION DESCRIPTION

DIVISION 10 SPECIALTIES
SECTION 104400 - FIRE PROTECTION SPECIALTIES

END OF CONTENTS TABLE

DIVISION 10 SPECIALTIES
SECTION 104400 - FIRE PROTECTION SPECIALTIES

PART 1 - GENERAL

1.1 SUMMARY

A. Types of fire extinguishers include the following:

1. ABC multipurpose dry chemical.
2. BC carbon dioxide.
3. Water under pressure.

B. Locations of fire extinguishers are shown on drawings.

1.2 SUBMITTALS

A. Product Data: Manufacturers literature indicating compliance with requirements, and installation instructions.

1.3 QUALITY ASSURANCE

A. Provide new UL-listed fire extinguishers bearing UL "Listing Mark" for type, rating, and classification of extinguishers indicated.

PART 2 - PRODUCTS

2.1 ACCEPTABLE MANUFACTURERS

A. Manufacturers: Subject to compliance with requirements, provide products of one of the following:

Badger Fire Protection.
Buckeye Fire Equipment Co.
General Fire Extinguisher Corp.
Kidde Co.
Larsen's Manufacturing Co.
Potter-Roemer Inc.

SELECT APPROPRIATE TYPES OF FIRE EXTINGUISHER UNITS. NOTE THAT THERE ARE OTHER TYPES THAN LISTED BELOW.

SELECT BELOW FOR STANDARD LABORATORY AND OTHER TYPICAL APPLICATIONS, INCLUDING ELEVATOR MACHINE ROOMS.

2.2 MULTI-PURPOSE DRY CHEMICAL TYPE

A. Provide UL-rated 4-A; 60-BC, 10-lb. nominal capacity, in enameled steel container.

SELECT BELOW ONLY AFTER VERIFYING THAT IT MEETS CODE FOR CONTEMPLATED USAGE.

2.3 CARBON DIOXIDE TYPE

A. Provide UL-rated 10-BC, 10-lb. nominal capacity, enameled metal container.

2.4 MATERIALS

A. Provide units with metal valve assemblies, discharge levers and carrying handles and with rubber hoses. Plastic is not permitted. Provide metal brackets for wall mounting units where cabinets are not indicated.

INCLUDE THE FOLLOWING WHERE DESIRED - USUALLY NOT IN LABS OR EQUIPMENT ROOMS.

2.5 FIRE EXTINGUISHER CABINETS

A. Provide fire extinguisher cabinets at locations indicated on drawings.

BELOW IS EXAMPLE ONLY - SEMI-RECESSED AND SURFACE MOUNTED TYPES ARE AVAILABLE. CONSULT CATALOGS FOR MFR AND MODEL DESIRED. FULLY RECESSED REQUIRED 6" STUD DEPTH

1. Type: Fully recessed with trim.
2. Size: To suit type of unit being housed.
3. Door and Frame Finish: Satin stainless steel.
4. Window: Approx. 2 inches by 24 inches, 1/4 inch clear acrylic.
5. Manufacturer/Model: Potter-Roemer Inc.; No. 1704, or equivalent products of Samson Metal Products, Larsen's Mfg Co.
6. Signage: Identify extinguisher cabinets with manufacturer's standard red lettering applied to cabinet door, spelling "FIRE EXTINGUISHER". Letter size, style and location selected by Architect.

DELETE BELOW IF NO BRACKET-MOUNTED EXTINGUISHERS.

2.6 ACCESSORIES FOR BRACKET MOUNTED EXTINGUISHERS

A. Mounting Brackets: Provide units designed to hold specified extinguishers. Mount brackets with expansion anchors to withstand a 200 pound load applied in any direction.

B. Signage: Identify bracket-mounted extinguishers with red letter decals with clear backgrounds, spelling "FIRE EXTINGUISHER" applied to wall surface. Letter size, style and location selected by Architect and indicating "FIRE EXTINGUISHER".

PART 3 - EXECUTION

3.1 INSTALLATION

A. Install in accordance with manufacturer's directions for type of mounting required at height and locations indicated, or if not indicated, to comply with applicable regulations of governing authorities.

1. Coordinate installation of fire extinguisher cabinets with wall system installers.

END OF SECTION 104400

UNIVERSITY OF MICHIGAN
ARCHITECTURE, ENGINEERING AND CONSTRUCTION

ARCHITECTURE & ENGINEERING
326 East Hoover, Mail Stop B
Ann Arbor, MI 48109-1002
Phone: 734-764-3414
Fax: 734-936-3334

BuildingName
The Description of the Project
P00000000 0000

SPECIFICATION DIVISION 10

NUMBER SECTION DESCRIPTION

DIVISION 10 SPECIALTIES
SECTION 105113 – METAL LOCKERS

END OF CONTENTS TABLE

DIVISION 10 SPECIALTIES
SECTION 105113 – METAL LOCKERS

UPDATED 4-22-04 TO REMOVE LYON FROM MFRS. LIST DUE TO POOR PERFORMANCE

PART 1 - GENERAL

1.1 SUMMARY

A. Work of this Section: Extent of steel lockers as shown on drawings.

1.2 SUBMITTALS

A. Shop Drawings: Indicate overall dimensions for installation, details for installation, trim and vertical sections.

B. Samples for Initial Selection: Provide manufacturer's standard card containing samples of paint in full range of standard colors. Photographic reproductions of colors are not acceptable.

PART 2 - PRODUCTS

2.1 ACCEPTABLE MANUFACTURERS

A. Manufacturers: Subject to compliance with requirements, provide products of one of the following:

Interior Steel Products Co.
List Industries Inc.
Penco
Republic Storage System Co.

BELOW DESCRIBES ONE TYPE OF LOCKER UNIT. EDIT WITH MANUFACTURER'S CATALOGS FOR SIZES, MATERIALS AND CONFIGURATIONS TO SUIT PROJECT.

2.2 METAL LOCKER UNITS

A. Single tier lockers with expanded metal mesh (or punched steel) doors, sides and tops, and solid backs. Provide units within 1 inch of following dimensions, subject to manufacturer's standards:

B. Size: 18 inches wide by 72 inches high by 18 inches deep.

2.3 ACCESSORIES

A. Hat Shelf: Mfr's standard shelf 12 inches down from top of unit.

B. Latch: Chrome plated or stainless steel door latch to accept standard padlock.

C. Clothes Hook: Both sides of interior.

D. Metal Base: 4 inches high.

2.4 MATERIALS

A. Fabricate parts of mild, cold-rolled, furniture grade steel, minimum gages as follows:

1. Door Frames: 16 ga.

SELECT DOOR TYPE BELOW.

2. Doors: 14 ga. expanded metal mesh.
3. Doors: 14 ga. perforated metal.

DELETE SIDE/END AND BACK TYPES BELOW IF SOLID PANEL TYPE LOCKERS SELECTED.

4. Sides and Ends: 16 ga. expanded metal mesh.
5. Backs: 18 ga.

DELETE BELOW IF EXP. MESH TYPE LOCKERS SELECTED.

6. Body: 24 ga. min.
7. Row Ends: 16 ga. min.

BELOW FOR BOTH EXP. MESH AND PANEL TYPES.

8. Tops and Bottoms and Shelves: 16 ga. steel.

2.5 FABRICATION

A. Fabricate units with mfr's standard diamond pattern expanded metal mesh, or square punched steel panels. Fabricate units with mfr's standard methods; both knock-down and welded construction are permitted. Provide lockers as separate, independent units, [except adjoining locker units are permitted to share common partition (s).

1. Deliver knock-down type units to site fully assembled and ready for installation in field.
2. Provide mfr's standard hold-down clips, fasteners, and accessories required to secure units to base and wall.
3. Where necessary, provide finished end covers at row ends exposed to view in finished construction. Units that are perforated to receive standard accessories are not acceptable; knock-out plugs are not acceptable.
4. Finish: Mfr's standard baked enamel finish over prime coat.
   a. Colors: Selected by Architect from mfr's standard color range.

PART 3 - EXECUTION

3.1 INSTALLATION

A. Assemble and install units in strict accordance with mfr's recommendation and published installation literature. Fasten units to floor and wall with recommended attachment methods.

END OF SECTION 105113

UNIVERSITY OF MICHIGAN
ARCHITECTURE, ENGINEERING AND CONSTRUCTION

ARCHITECTURE & ENGINEERING
326 East Hoover, Mail Stop B
Ann Arbor, MI 48109-1002
Phone: 734-764-3414
Fax: 734-936-3334

BuildingName
The Description of the Project
P00000000 0000

SPECIFICATION DIVISION 11

NUMBER SECTION DESCRIPTION

DIVISION 11 EQUIPMENT
SECTION 115213 - PROJECTION SCREENS

END OF CONTENTS TABLE

DIVISION 11 EQUIPMENT
SECTION 115213 - PROJECTION SCREENS

PART 1 - GENERAL

1.1 SUMMARY

A. Extent of projection screens is shown on drawings.

B. Type of projection screen required:

SELECT ONE OF THE FOLLOWING]

1. Front projection screen, electrically operated, surface mounted unit.
2. Front projection screen, manually operated.

1.2 RELATED SECTIONS

OMIT BELOW IF NO WOOD BACKING REQUIRED. MANUFACTURERS GENERALLY PROVIDE A BRACKET THAT POSITIONS THE SCREEN AWAY FROM THE WALL TO AVOID CONFLICT WITH CHALK TROUGH OF CHALKBOARDS.

A. Wood backing is included in Division 06 Section "Rough Carpentry".

DELETE BELOW IF NO ELECTRICALLY OPERATED UNITS.

B. Electrical wiring, connections, and installation of remote control switches for electrically operated projection screens are specified in Division 26 sections.

1.3 SUBMITTALS

A. Product Data: Submit copies of Manufacturer's specifications and installation instructions for projection screen unit.

DELETE BELOW IF NO ELECTRICALLY OPERATED UNITS.

B. Wiring Diagrams: Submit manufacturer's wiring diagram for electrically operated units.

1.4 QUALITY ASSURANCE

A. Quality Assurance: Obtain projection screen from a single manufacturer as a complete unit, including mounting hardware and accessories.

B. Fire Performance Characteristics: Provide projection screen fabrics identical to those materials which have undergone testing and passed requirements for flame resistance of one of the following:

1. NFPA 701 per small scale test.
2. Federal Standard 191A/5903 for test method. FS GG-S-00172D(1) for flame resistance.

PART 2 - PRODUCTS

DELETE BELOW UP TO "MANUALLY OPERATED FRONT PROJECTION SCREENS" IF NO ELECTRICALLY OPERATED UNITS

2.1 FRONT PROJECTION, ELECTRICALLY OPERATED SCREENS

A. General: Provide mfr's standard UL-listed and -marked units consisting of case, screen motor, controls, mounting accessories and other components as required for a complete installation and complying with requirements indicated.

B. Viewing Surface of Screen: Comply with the following requirements for type of viewing surface:

1. Matte white viewing surface with minimum gain characteristics complying with FS GG-S-00172D(1) for Type A screen surface; without black masking borders.
   a. Edge Treatment: Without black masking borders.
   b. Edge Treatment: With black masking borders.

RETAIN EITHER ABOVE OR BELOW

2. Glass beaded viewing surface with minimum gain characteristics complying with FS GG-S-00172D(1) for Type C screen surface.
   a. Edge Treatment: Without black masking borders.
   b. Edge Treatment: With black masking borders.

C. Screen Controls: Remotely control operation of each screen as follows:

MODIFY BELOW FOR MULTI-STATION UNITS

1. Single station Control: Three-position, UL-listed control switch for each screen with metal device box and cover plate for flush mounting and for connection to 120VAC electric power supply.

OTHER POSSIBILITIES FOR BELOW INCLUDE ROLLER-MOUNTED MOTORS (NOT USUALLY SELECTED FOR UNIVERSITY WORK) AND AUTOMATIC CEILING CLOSURES

D. End-Mounted-Motor-Operated Screens Without Ceiling Closure: Units designed and fabricated for recessed, surface, or suspended installation, with bottom of case entirely or partially open under screen compartment, as standard with manufacturer, under screen compartment to allow raising and lowering of screen, closed with access door under motor compartment; and complying with the following requirements:

1. Screen Case: Wood sides and top, with metal-lined motor compartment, factory primed and constructed as follows:
   a. Provide single or double top as standard with manufacturer.

2. Motor: Instant reversing, gear drive motor of size and capacity recommended by screen manufacturer, with permanently lubricated ball bearings, automatic thermal overload protection, preset limit switches to automatically stop screen in "up" and "down" position, and positive stop action to prevent coating: mounted in motor compartment on right end of screen, unless otherwise indicated, and remotely controlled as indicated.
3. Screen: Mildew- and flame-resistant glass fiber fabric with vinyl-coated viewing surface complying with requirements indicated, with top edge mounted on, and securely fastened to, rigid metal roller supported by self-aligning bearings in brackets.

INCLUDE DIMENSIONS BELOW IF NOT SHOWN ON DRAWING

a. Size of Viewing Surface: As indicated.

MODIFY BELOW TO SUIT APPLICATION

E. Acceptable Manufacturers: Subject to compliance with requirements, provide products of one of the following:

"Series 800"; Bretford/Knox Mfg. Co.
"Series 900"; Bretford/Knox Mfg. Co.
"Senior Electrol"; Da-Lite Screen Co.
"Rollermatic"; Draper Shade & Screen Co.

DELETE BELOW IF NO MANUALLY OPERATED UNITS

2.2 MANUALLY-OPERATED FRONT PROJECTION SCREENS

A. General: Provide manufacturer's standard units consisting of case, screen, mounting accessories and other components as required for a complete installation and complying with descriptive requirements indicated below:

B. Spring-Roller-Operated Projection Screens: Units designed and fabricated for wall or ceiling installation and complying with the following requirements:

1. Screen Case: Fabricated in one piece from not less than 22 gage steel with flat back design, vinyl-covered or baked-enamel finish, and end caps with integral roller brackets and furnished with universal mounting brackets in finish matching end caps to enable attachment to wall or ceiling.
2. Screen: Mildew- and flame-resistant glass fiber fabric with vinyl coated viewing surface complying with requirements indicated below, with top edge mounted on, and securely anchored to, a 3 inch diameter rigid steel spring roller and bottom edge formed into a pocket holding a tubular metal slat, with ends of rod protected by plastic caps containing a screw-attachment saddle and pull.

INCLUDE DIMENSIONS BELOW IF NOT SHOWN ON DRAWING

3. Size of Viewing Surface: As indicated.
4. Type of Viewing Surface: Matte white with minimum gain characteristics complying with FS GG-S-00172D(1) for Type A screen surface; without black masking borders.

a. Edge Treatment: Without black masking borders.
b. Edge Treatment: With black masking borders.

DELETE ABOVE OR BELOW TO SUIT PROJECT

5. Type of Viewing Surface: Glass beaded viewing surface with minimum gain characteristics complying with FS GG-S-00172D(1) for Type C screen surface.
   a. Edge Treatment: Without black masking borders.
   b. Edge Treatment: With black masking borders.
6. Products: Subject to compliance with requirements, select one of the following:
   a. "Series 500 Auditorium"; Bretford/Knox Manufacturing Co.
   b. "Model C"; Da-Lite Screen co., Inc.
   c. "Luma 2"; Draper Shade and Screen Co.

PART 3 - EXECUTION

3.1 INSTALLATION

A. Install projection screen units and accessories at locations shown in accordance with Manufacturer's instructions. Install level, plumb, secure, and at proper height. Cooperate with other trades for securing projection screen units to finished surfaces. Repair of replace damaged units as directed.

3.2 CLEANING, ADJUSTMENT AND PROTECTION

DELETE PARAGRAPH BELOW IF NO ELECTRICALLY OPERATED UNITS

A. Adjust electrically operated projection screens for proper operation. Adjust screen speed to comply with manufacturer's recommendations. Adjust screen extension for maximum exposure in unrolled condition.

B. Protect installed units so that they will be in satisfactory operating condition, without damage, at completion of project.

END OF SECTION 115213

UNIVERSITY OF MICHIGAN
ARCHITECTURE, ENGINEERING AND CONSTRUCTION

ARCHITECTURE & ENGINEERING
326 East Hoover, Mail Stop B
Ann Arbor, MI 48109-1002
Phone: 734-764-3414
Fax: 734-936-3334

BuildingName
The Description of the Project
P00000000 0000

SPECIFICATION DIVISION 11

NUMBER SECTION DESCRIPTION

DIVISION 11 EQUIPMENT
SECTION 115300 - LABORATORY EQUIPMENT

END OF CONTENTS TABLE

DIVISION 11 EQUIPMENT
SECTION 115300 - LABORATORY EQUIPMENT

PART 1 - GENERAL

1.1 SUMMARY

USE THIS SECTION TO SPECIFY EQUIPMENT RELATED TO LABORATORIES

A. Extent of laboratory equipment is indicated on drawings and in schedules.

B. Type of laboratory equipment includes:

1. Undercounter dishwashers.
2. Undercounter freezers.
3. Undercounter refrigerators.
4. Undercounter icemakers.

1.2 SUBMITTALS

A. Product Literature: Submit manufacturer's product literature indicating compliance with requirements for each specific type of laboratory equipment.

1. Submit manufacturer's printed installation instructions, maintenance manual and warranty certificate.

1.3 QUALITY ASSURANCE

A. Provide only UL listed and labeled equipment and components.

B. Provide the following equipment with NSF (National Sanitation Foundation) approval:

EDIT THE FOLLOWING TO SUIT PROJECT. USUALLY REQUIRE NSF SEAL FOR DISHWASHER, ICEMAKER, AND REFRIGERATORS

1. Dishwasher.
2. Icemaker.

1.4 DELIVERY, STORAGE AND HANDLING

A. Coordinate delivery with supplier of laboratory casework specified in Division 12 Section "Laboratory Casework". Time equipment delivery to prevent delay in laboratory casework installation.

PART 2 - PRODUCTS

2.1 UNDERCOUNTER DISHWASHERS

A. Glassware Washer: Provide front loading glassware washer for undercounter installation, with not less than 4 independent wash/dry cycles, automatic safety switch to interrupt operation when door is open, low water cut-off device, and as follows:

1. Exterior Dimensions: 24-inches wide by 34-3/4-inches high by 25-1/2-inches deep.
2. Interior Dimensions: 22-inches wide by 24-inches high by 21-inches deep.
3. Cabinet Construction: AISI Type 308 18-8 stainless steel interior and exterior.
4. Controls: Solid state electronic timers and push button controls for individual programming and automatic operation of cycles. Wash water temperature selectable to 99 deg. C. and displayed by manufacturer's standard LED indicator or gage.
5. Available Power: 110V, 20A, 1 phase.

B. Accessories: Provide units with roll-out baskets sized and arranged to accommodate both beakers, test tubes and other small items, and larger items with minimum 10-inch clearance height.

C. Manufacturer/Model: Hotpack Corp.; Model UC2B, or equivalent products of Labconco, or Forma Scientific.

2.2 UNDERCOUNTER FREEZER

NOT PREPARED

2.3 UNDERCOUNTER FREEZER (EXPLOSION PROOF)

NOT PREPARED

2.4 UNDERCOUNTER REFRIGERATOR

NOT PREPARED

2.5 UNDERCOUNTER REFRIGERATOR (EXPLOSION PROOF)

NOT PREPARED

2.6 UNDERCOUNTER FLAKE ICE MAKER

THE FOLLOWING UNIT HAS THE ADVANTAGE OF BEING AN UNDERCOUNTER TYPE UNIT - NO CURRENTLY KNOWN EQUIVALENTS EXIST

A. Undercounter Icemaker: Provide ice maker unit for undercounter installation complete with built-in 40-lb. capacity storage bin.

1. Exterior Dimensions: 24-inches wide by 24-inches deep by 34-inches high.
2. Cabinet Construction: Provide units with face panels constructed of manufacturer's standard grade of satin finish stainless steel. Coat concealed portions of units with thermosetting epoxy.

B. Accessories: Include four, 6-inch adjustable legs.

C. Manufacturer/Model: Crystal Tips Ice Systems, model as follows:

SELECT ONE OF THE FOLLOWING. IN GENERAL PROVIDE UNITS WITH AIR COOLED CONDENSER AND 115 V. POWER REQUIREMENT - COORDINATE WITH MECHANICAL AND ELECTRICAL

1. 350-FAV-161 (air cooled condenser).
   a. Power requirement: 115 V., 8.8 A., 1 P.
2. 350-FAV-251 (air cooled condenser).
   a. Power Requirement: 220 V., 5.3 A., 1 P.
3. 350-FWVS-251 (water cooled condenser).
   a. Power Requirement: 220V., 4.4 A., 1 P.

PART 3 - EXECUTION

3.1 INSTALLATION

INCLUDE PARAGRAPH BELOW WHERE APPLICABLE

A. Coordinate installation activities with installer of laboratory casework specified in Division 12 Section "Laboratory Casework".

B. Install units in accordance with manufacturer's recommendations and printed instructions.

3.2 TESTING AND ADJUSTMENT

A. Test installed equipment for proper operation. Demonstrate operation and features to Owner's Representative and Owner's personnel.

B. Repair malfunctioning equipment to comply with manufacturer's specifications.

3.3 CLEANING AND PROTECTION

A. Protect installed units from dirt, dust, and damage caused by subsequent construction operations.

B. Clean units within 7 calendar days prior to Owner's inspection for Substantial Completion.

END OF SECTION 115300

UNIVERSITY OF MICHIGAN
ARCHITECTURE, ENGINEERING AND CONSTRUCTION

ARCHITECTURE & ENGINEERING
326 East Hoover, Mail Stop B
Ann Arbor, MI 48109-1002
Phone: 734-764-3414
Fax: 734-936-3334

BuildingName
The Description of the Project
P00000000 0000

SPECIFICATION DIVISION 11

NUMBER SECTION DESCRIPTION

DIVISION 11 EQUIPMENT
SECTION 115313 - LABORATORY FUME HOODS

END OF CONTENTS TABLE

SUBSTANTIAL REVISIONS INCORPORATED INTO THIS SECTION - MAY 9, 2011, BY LAB SUSTAINABILITY TEAM AND A&E ARCHITECTURAL DEPARTMENT.

REVISED NOV. 8, 2013 TO REFLECT NEW ANSI Z9.5 2012 VERSION AND TO SPECIFY THE MINIMUM HOOD AIR FLOW RATE TO BE 375 ACH. D. KARLE, PER LAB SUSTAINABILITY TEAM.

DIVISION 11 EQUIPMENT
SECTION 115313 - LABORATORY FUME HOODS

CONSULT WITH MECHANICAL ENGINEER TO DETERMINE APPROPRIATE TYPE OF FUME HOOD AND VENTILATION REQUIREMENTS. SECTION 115313 "LABORATORY FUME HOODS" AND SECTION 230920 LABORATORY TERMINAL AIRFLOW UNITS AND CONTROLS MUST BE COORDINATED WITH EACH OTHER. SEE U-M DESIGN GUIDELINE 230920 FOR ADDITIONAL INFORMATION REGARDING HOODS AND LAB DESIGN. INVOLVE OSEH EARLY IN THE PLANNING OF PROJECTS WHICH WILL UTILIZE FUME HOODS.

THIS SPECIFICATION COVERS BENCH TOP STYLE HOODS. FLOOR MOUNTED (SOMETIMES REFERRED TO AS "WALK-IN" HOODS) REQUIRE SPECIAL CONSIDERATIONS AND ARE NOT SPECIFIED BELOW. SEE THE U-M LAB VENTILATION DESIGN GUIDELINE FOR REQUIREMENTS FOR FLOOR MOUNTED WALK IN HOODS.

PART 1 - GENERAL

1.1 RELATED DOCUMENTS

A. Drawings and general provisions of the Contract, including Standard General Conditions, Supplemental General Conditions, Division 01 Specification Sections, and other applicable Specification Sections, apply to this Section.

B. Related Sections:

1. Division 01 Sections "Project Commissioning for Small Projects" and "Full Project Commissioning".
2. Division 12 Section: "Laboratory Casework".
3. Division 22 Section: Basic Piping Materials and Methods
4. Division 22 Section: Mechanical Identification
5. Division 23 Section: Laboratory Terminal Airflow Units and Controls
6. Division 23 Section: Laboratory Airflow Controls-DDC
7. Division 26 Section: Electrical

1.2 SUMMARY

A. Section Includes

ADD FULL BYPASS CONSTANT VOLUME TYPE IF INCLUDED ON YOUR PROJECT. FULL BYPASS CONSTANT VOLUME HOODS ARE NOT TYPICALLY USED AT U-M AND ARE THUS NOT SPECIFIED IN THIS SPECIFICATION (ALTHOUGH THEY ARE DEFINED IN THE "DEFINITIONS" SECTION, FURTHER BELOW).

1. Chemical Fume Hoods of the following types:
   a. Partial Bypass Constant Volume
   b. Restricted Bypass Variable Volume
   c. Reduced Face Velocity (RFV)
2. Fume Hood Understructures (base units, flammable and acid storage cabinets)
3. Fume Hood Plumbing Accessories
4. Fume Hood Electrical Accessories

1.3 SUBMITTALS

A. Samples: Submit samples of exterior finish colors and interior liner material for Architect's initial selection.

B. Shop Drawings: Submit shop drawings for fume hoods showing plans, elevations, ends, cross-sections, service run spaces, location and type of service fixtures; details and location of anchorages and fitting to floors, walls, and base; layout of units with relation to surrounding walls, doors, windows, and other building components; connection to hood exhaust system; location of access doors.

1. Coordinate shop drawings with other work involved.
2. Provide roughing-in drawings for mechanical and electrical services, including location of cut-off valves and junction boxes, where pre-plumbed or pre-wired units are required.
3. Quantify net free area of fume hood opening with Sash Height in fully open position and at sash stop height.
4. Provide static pressure drop at 100 fpm face velocity with fume hood sash in full open position.

C. Certification of Performance As Manufactured: Provide for each hood type and size indicating hood meets or exceeds the ASHRAE 110 As Manufactured (AM) requirements specified in Part 2.

D. Certification of Performance, Field: Provide certification of performance signed by Installer, verifying that each unit has been field tested in accordance with the provisions of Part 3 "Field Quality Control" article, and is operating in compliance with specified requirements.

E. Shipping, handling, and storage instructions.

F. Installation and start-up instructions.

G. Project specific maintenance and operating data, and recommended spare parts list.

1.4 QUALITY ASSURANCE

A. Manufacturers and Products: The products and manufacturers specified in this Section establish the standard of quality for the Work. Subject to compliance with all requirements, provide specified products from the manufacturers named in Part 2.

USUALLY RETAIN BELOW - DELETE/REVISE ONLY IF FUME HOOD BASE CABINETS DO NOT NEED TO MATCH ADJACENT LAB BENCH BASE CABINETS, OR FOR OTHER CIRCUMSTANCES.

B. Laboratory fume hoods, casework, tops, sinks, service fixtures, and related furniture shall be provided by the same distributer who shall be fully responsible for coordinating all such components. All fume hoods shall be supplied from the same hood manufacturer.

1. For projects using both RFV and standard fume hoods, fume hoods from a maximum of two manufacturers may be provided.

C. Reference Standards: Products in this section shall be built, tested, and installed in compliance with the following quality assurance standards; latest editions, unless noted otherwise:

1. Comply with provisions of Michigan Building Code .
2. Scientific Equipment and Furniture Association, SEFA 1 Laboratory Fume Hoods.
3. Scientific Equipment and Furniture Association, SEFA 8 Laboratory Furniture, Casework, Shelving and Tables.
4. Scientific Equipment and Furniture Association, SEFA 2.3 Installation of Scientific Laboratory Furniture and Equipment.
5. Underwriters Laboratories, UL 1805 Laboratory Hoods and Cabinets.
6. American Society of Heating, Refrigeration and Air-conditioning Engineers, ANSI/ASHRAE 110-1995 Method of Testing Performance of Laboratory Fume Hoods.
7. ANSI/AIHA Z9.5-2012 Laboratory Ventilation.
8. National Fire Protection Association NFPA 45 Flammable and Combustible Liquids Code 2004.

1.5 DEFINITIONS

A. Hood- Full Bypass Constant Volume Type

1. With the sash at sash stop height, the air flowing through the bypass and the air flowing through the Working Area are essentially equal in volume (the free area of the bypass and the free area of the Working Area are essentially the same.
2. With the sash at any other position, including fully opened or fully closed, the total air volume (bypass + Working Area) entering the hood remains essentially unchanged. The face velocity through the Working Area remains constant, regardless of sash position.

B. Hood-Partial Bypass Constant Volume Hood

1. With the sash at sash stop height, the air flowing through the bypass is essentially zero.
2. With the sash at any position between sash stop height and fully closed, the bypass opens in proportion to the sash closing, such that the face velocity through the Working Area remains essentially constant.
3. With the sash at any position between sash stop height and fully open, the air volume exiting the hood remains unchanged, therefore as the sash is opened the face velocity through the Working Area decreases proportionally with the sash position. When the sash is fully open, the face velocity through the Working Area is approximately half what it was when the sash was at sash stop height (assuming a typical maximum Sash Height of approximately 28").

C. Hood- Restricted Bypass Variable Volume Hood

1. Regardless of sash position, the face velocity through the Working Area remains constant. The air flowing through the bypass is only enough such that the hood maintains the minimum air change rate when the sash is fully closed. Thus “restricted bypass” means there is nearly zero bypass.

D. **Sash Height:** The distance from the bottom of the sash to the working surface of the hood. Not from the bottom of the sash to the top of the airfoil vane(unless the top of the air foil vane and the top of the working surface are at the same height).

E. **Working Area:** The area bounded by the Sash Height and the net width of the hood opening.

1.6 DELIVERY, STORAGE, AND HANDLING

ADD BELOW IF LABORATORY CASEWORK SECTION INCLUDED

A. Coordinate delivery of fume hood with delivery of other laboratory casework components.

B. Protect finished surfaces from soiling and damage during handling and installation. Keep covered with polyethylene film or other protective covering.

1.7 WARRANTY

A. Provide a complete parts and labor warranty for a minimum of 1 year from the date of Substantial Completion.

PART 2 - PRODUCTS

2.1 ACCEPTABLE MANUFACTURERS

A. Chemical fume hoods, all types except Reduced Face Velocity type:

1. Air Master; Air mmaster Systems Corp.
2. BMC

BELOW MFR. FORMERLY NAMED FISHER HAMILTON

3. Hamilton Scientific
4. Kewaunee Scientific Corp.
5. Mott Manufacturing, Ltd.
6. Labconco Corp.
7. Lab Crafters, Inc

B. Reduced Face Velocity type chemical fume hoods (bench top models only):

1. Lab Crafters Air Sentry
2. Labconco Protector Xstream
3. Kewaunee Supreme Air LV

2.2 FUME HOODS, GENERAL

A. Provide UL 1805 labeled fume hoods that provide proper exhaust volume and operate in a safe, efficient manner, within the tolerances for face velocities specified. Dead air pockets and reverse air currents shall not occur along the surface of hood interiors.

B. Static Pressure Drop: Maximum of 0.35" (WG) at 100 FPM face velocity with fume hood sash in full open position.

THE MINIMUM 375 AIR CHANGE RATE PER HOUR SPECIFIED BELOW MAY NOT BE ADEQUATE TO PREVENT A HAZARD IF FLAMMABLE LIQUIDS, VAPORS, OR GASES WILL EXIST ALONG WITH AN IGNITION SOURCE, OR BECAUSE OF OTHER CONCERNS OUTLINED IN Z9.5. WHEN IN DOUBT EVALUATE THE HAZARD WITH U-M OSEH, AND ADJUST ACCORDINGLY.

C. Hood minimum air flow rate (any sash position): Sufficient to prevent hazardous concentrations of contaminants within the hood and in compliance with ANSI Z9.5-2012, no less than 375 hood air changes per hour.

D. Splay or radius the top and sides of the face opening with configuration proven to provide an aerodynamic section to ensure smooth, even flow of air into hood.

E. Provide air foil vane at work surface. Air foil vane shall not be mounted more than 3" above the hood working surface. Air foil vane shall prevent backflow of air and shall direct positive flow of air across work surface.

F. Control System Components: Coordinate with Related Section "Laboratory Terminal Airflow Units and Controls" and "Laboratory Airflow Controls-DDC". Provide cutout in side of sash opening for the fume hood monitor to allow it to be flush or surface mounted, as required for the project. Also make provisions to allow mounting of sash sensors, sash alarm, and other devices provided by Related Section.

ALWAYS INCLUDE THE REQUIRED HOOD PERFORMANCE CRITERIA. THE PERFORMANCE CRITERIA BELOW IS TYPICALLY ADEQUATE FOR U-M LABS. HOODS INVOLVING HIGHLY TOXIC CHEMICALS, HIGH PRODUCTION VOLUMES, HIGH-HAZARD RADIOACTIVE MATERIALS, OR OTHER UNIQUE CIRCUMSTANCES MAY REQUIRE MORE STRINGENT CRITERIA. U-M OSEH SHOULD BE CONSULTED IN SUCH CASES.

FIELD "AS INSTALLED" (AI) TESTING MAY BE APPROPRIATE IN SOME CASES. IF REQUIRED, REVISE BELOW IF NECESSARY AND CORRESPONDING PART 3 PARAGRAPH.

2.3 HOOD PERFORMANCE CRITERIA

A. Chemical fume hoods shall meet or exceed the following ASHRAE 110 As Manufactured (AM) performance criteria. Performance criteria shall be met with the sash raised to the height of the sash stop (unless noted otherwise), and at any face velocity within +/- 10 FPM of the average face velocity indicated.

1. All Hood Types shall pass the Local Flow Visualization and Large Volume Visualization challenges.
2. Chemical fume hoods except Reduced Face Velocity (RFV) type shall be tested at 100 FPM average face velocity. Tracer gas concentrations, including Sash Movement Effect, shall not exceed 0.01 PPM at 4 LPM tracer gas release rate (4AM0.01 and 4SME-AM0.01). VAV Hoods shall also achieve this performance at the full open sash position.

3. Chemical fume hoods RFV type shall be tested at 60 FPM average face velocity. Tracer gas concentrations, including Sash Movement Effect, shall not exceed 0.01 PPM at 6 LPM tracer gas release rate (6AM0.01 and 6SME-AM0.01). The vertical position of the detector port shall be located 12" above the hood working surface during testing. All other detector positions (horizontal positions, distance from sash) shall match ASHRAE 110 requirements.

B. The above performance criteria shall also be met when field ASHRAE 110 testing is specified.

SELECT ONE OR MORE OF THE FOLLOWING STANDARD HOOD TYPES, OR REVISE TO SUIT PROJECT. IF YOU HAVE A VARIETY OF LINING OR TOP TYPES IN YOUR PROJECT, BE SURE TO CAREFULLY INDICATE ON DRAWINGS WHAT MATERIALS BELONG IN WHICH HOODS

ALWAYS CONSULT WITH THE MECHANICAL ENGINEER AND U-M OSEH REGARDING THE APPROPRIATE HOOD TYPE TO SPECIFY. CLEARLY DELINEATE THE HOOD TYPES REQUIRED FOR THE PROJECT EITHER IN THIS SPECIFICATION OR ON THE DRAWINGS (PREFERRED).

CONSTANT VOLUME HOODS OF ANY TYPE ARE NOT SAFE WITH COMBINATION SASH ARRANGEMENTS BECAUSE CORRECT FACE VELOCITY CAN'T BE ASSURED AS THE HORIZONTAL SASH IS ADJUSTED. IF COMBINATION SASHES ARE REQUIRED, SPECIFY RESTRICTED BYPASS VAV HOODS, AND ASSURE THE MECHANICAL ENGINEER SPECIFIES A CORRESPONDING VAV TYPE LAB TERMINAL AIR FLOW UNIT.

FULL BYPASS CONSTANT VOLUME HOODS ARE NOT SPECIFIED BELOW AS THEY ARE NOT TYPICALLY USED AT U-M. IF YOUR PROJECT REQUIRES A HOOD OF THIS TYPE, ADD BELOW.

2.4 PARTIAL BY-PASS CONSTANT VOLUME CHEMICAL FUME HOOD

A. Equip units with compensating by-pass above the sash which functions automatically as the vertical sash is operated, to provide air flow control as described in the Definitions article.

1. Provide vertical rising sashes only.

DEPENDING ON ROOM MINIMUM AIR CHANGE RATES, VAV HOODS MAY SAVE ENERGY. THEY SHOULD NOT BE INDISCRIMINATELY SPECIFIED UNLESS THE MECHANICAL ENGINEER HAS DONE AN ANALYSIS DETERMINING ENERGY SAVINGS WILL ACTUALLY OCCUR. AN EXCEPTION IS COMBINATION SASHES; IF THESE ARE REQUIRED, ALWAYS SPECIFY A VAV HOOD AND ASSURE THE MECHANICAL ENGINEER SPECIFIES A CORRESPONDING VAV TYPE LAB TERMINAL AIR FLOW UNIT.

IF YOUR PROJECT REQUIRES VAV HOODS, EDIT BELOW OR INDICATE ON A DRAWING SCHEDULE (PREFERRED) WHICH TYPE SASH IS REQUIRED: VERTICAL RISING OR COMBINATION.

2.5 RESTRICTED BYPASS, VARIABLE AIR VOLUME (VAV) CHEMICAL FUME HOOD

A. Provide hoods specifically designed for VAV application which provide air flow control as described in the Definitions article.

1. Provide vertical rising or combination sashes, as indicated.

RFV HOODS ARE RESTRICTED TO ONLY THE MODEL AND MFR. LISTED UNDER THE ARTICLE "APPROVED MANUFACTURERS". BY U-M OSEH RULING, RFV HOODS:

ARE LIMITED TO 6' MAXIMUM WIDTH.

ARE TO BE BALANCED TO PROVIDE 70 +/- 5 FPM AVERAGE FACE VELOCITY AND SHALL ALARM AT 60 FPM FACE VELOCITY. THIS AIR BALANCE INFORMATION MUST APPEAR IN THE MECHANICAL DOCUMENTS- COORDINATE WITH MECHANICAL ENGINEER.

IF YOUR PROJECT REQUIRES RFV HOODS, EDIT BELOW OR INDICATE ON A DRAWING SCHEDULE (PREFERRED):

WHICH TYPE SASH IS REQUIRED: VERTICAL RISING OR COMBINATION.

IF THE RFV HOODS ARE PARTIAL BYPASS CONSTANT VOLUME OR VAV TYPE.

2.6 REDUCED FACE VELOCITY CHEMICAL FUME HOOD

A. Provide bench top type hoods specifically designed for reduced face velocity (RFV) operation of model and manufacturer listed under Acceptable Manufacturers, and which provide air flow control as described in the Definitions article.

1. RFV hoods shall be partial bypass constant volume or VAV type, as indicated.
   a. Provide vertical rising sash on constant volume type.
   b. Provide vertical rising or combination sashes, as indicated, on VAV type.
2. Maximum over-all hood depth: 36".

2.7 HOOD SUPERSTRUCTURE CONSTRUCTION

USUALLY RETAIN ALL FOLLOWING REQUIREMENTS

A. General: Design hoods to be chemical and flame resistant, for collection, retention and disposal of hazardous fumes with complete safety, minimum expenditure of purging air from room supply, and minimum turbulence within chamber.

B. Framework: Heavy-gage steel members, reinforced, braced and assembled to insure strength and rigidity.

C. Body Construction: Superstructure shall have double wall construction. Exterior shall be of minimum 18 gage cold-rolled steel with component parts screwed together to allow removal of end panels, front end fascia pieces, top fascia and air foil strips, and to allow access to plumbing lines and service fixtures. Apply manufacturer's standard acid and alkali resistant baked-on or powder-coated finish to interior and exterior surface of component parts prior to final assembly.

SELECT COLOR

1. Color: Selected by Architect from manufacturer's standard range.

D. Ends: Double-wall end panels (enclosing sash counter-balance weights and all utilities) without projecting corner posts or other obstructions to interfere with smooth, even flow of air.

E. Rear Baffle: Provide non-adjustable baffle at rear of hood with openings located to purge the upper and lower area of the hood. Baffle is to be fabricated of the same material as the hood liner.

USUALLY SELECT ABOVE AND DELETE BELOW FOR TEACHING LABS (WHERE USERS ARE LESS LIKELY TO BE KNOWLEDGEABLE ABOUT FUME HOODS AND TO HAVE NEED FOR THE FLEXIBILITY OF ADJUSTABLE BAFFLES). FOR RESEARCH LABS AND LABS USED FOR CHEMICAL DISPENSING, SELECT BELOW AND DELETE ABOVE IN CONSULTATION WITH MECHANICAL ENGINEER AND OSEH.

F. Rear Baffle: Provide baffle at rear of hood with manually adjustable openings at top and bottom to allow adjusted flow of air through hood to compensate for type of gas, apparatus, or heat source used. Fabricate unit to be easily removable for cleaning behind baffle, and of same material as hood lining.

G. Plenum Chamber: Adequate volume for hood dimensions, extending full width of hoods to equalize incoming air flow, of same material as hood lining. Provide corrosion resistant duct stub of proper dimension for connection to exhaust duct assembly.

H. By-Pass Grilles: When air is required to be taken from room other than through hood sash opening, provide suitable by-pass grilles having required free opening but concealing plenum behind.

I. Sash: Provide an operable sash fabricated with minimum 18 gage steel four-sided frame with corners welded and ground smooth. Glaze with laminated safety glass set into chemical resistant rubber glazing channels, held in place with removable stops. Sash lifting system (cable or chain) shall hold sash at any position without creep and prevent sash drop in the event of a cable failure. Sash and counter balance mechanism design shall be life cycle tested to withstand a minimum of 100,000 full travel cycles without signs of fatigue.

14" IS THE STANDARD SASH HEIGHT AT U-M AND RARELY IF EVER SHOULD BE CHANGED. SEE U-M DESIGN GUIDELINE 230920 FOR ADDITIONAL INFORMATION. THE DESCRIPTION BELOW FOR SASH STOP LOCATION WHEN VANES ARE LOCATED MORE THAN 2" ABOVE THE HOOD WORKING SURFACE IS NECESSARY TO ACCOMMODATE CERTAIN HOOD MFR.S.

1. Sash Stops: Install integral sash stops on fume hoods 14 inches above the hood working surface. For hoods with air foil vanes located more than 2" above the hood working surface, locate sash stop 12" above top of vane.
   a. Example- The vane is located 3" above the working surface: sash stop to be 12" above vane, 15" above working surface.
   b. The stops shall be of the type that can be temporarily bypassed to allow the sash to be raised to the full open position for equipment/experiment set-up and removal.
2. Vertical Rising Sash: Provide sliding single-hung, full-view sash.

SELECT ABOVE OR BELOW OR BOTH IF BOTH TYPES OF SASH ARE REQUIRED. IF BOTH, INDICATE THE SASH TYPE REQUIRED AT EACH SPECIFIC HOOD LOCATION. CAREFULLY REVIEW ADDITIONAL SPEC EDITORS NOTES AT ARTICLES 2.3, 2.4 AND 2.5 BEFORE SELECTING SASH TYPES. VERTICAL SASH HAS LESS EXPENSIVE FIRST COST AND ARE PREFERRED BY U-M OSEH AND PLANT. COMBINATION SASH PROVIDES ADDITIONAL FLEXIBILITY FOR USERS BUT REQUIRES THAT MORE EXPENSIVE VAV FUME HOODS AND VAV CONTROLS BE SPECIFIED AS WELL.

3. Combination Sash: Provide sliding single-hung sash with dual-track system at top and bottom of glazing opening for individual, horizontally sliding safety glass panes.

MODIFY PARAGRAPH BELOW IF DIFFERENT CONFIGURATION IS DESIRED.

   a. Panel Arrangement: Provide sash with 4 individual sliding glass panes.
4. Counterbalance vertical sliding sash with sash weight and cable/chain system. Provide stainless steel or monel metal cable/chain, ball-bearing sheaves/sprockets, plastic glides in stainless steel guides, and stainless steel lift handles. Provide rubber bumpers at top and bottom of each sash unit.
5. Safety Glazing: Two sheets of double strength "B" quality, clear sheet glass permanently laminated with a sheet of clear, plasticized polyvinyl butyl.

J. Closure Strips: Wood or metal, as required to matching adjoining materials and finishes. Provide where required to close openings between fume hood base cabinet and superstructure and adjacent building wall construction.

INCLUDE BELOW FOR IMPROVED APPEARANCE WITH SUSPENDED CEILINGS. USUALLY NOT APPROPRIATE FOR USE IN ROOMS WITHOUT SUSPENDED CEILINGS

K. Enclosure Panels: Provide removable metal panels matching hood superstructure. Enclose area from top of hood to underside of suspended ceiling unless indicated otherwise.

L. Holes: Provide holes for passage of piping and conduit and for fixtures furnished in this Section or under Related Sections.

M. Fasteners: Provide stainless steel fasteners wherever exposed to fumes in hood.

2.8 INTERIOR LINER PANELS AND WORKING SURFACE

USUALLY RETAIN BELOW LINER PANEL PARAGRAPH; MODIFY IN THE RARE CASE WHERE ONLY STAINLESS STEEL INTERIORS ARE REQUIRED, OR IF EPOXY RESIN LINER IS REQUIRED. AT THIS TIME ONLY KEWAUNEE AND MOTT OFFER EPOXY RESIN LINER AS AN OPTION.

A. Liner Panels: Interior lining shall be flush, cut to fit size of hood interior and securely held in place with fasteners. Provide back baffles of the same material as liner panels. Fabricate liner panels with cut-outs in hood side panels to provide access to plumbing lines and to receive service fixtures at side of hood, as indicated. Furnish removable plug buttons for holes not used for indicated fixtures. Liner material shall be as follows:

EPOXY RESIN ALSO AVAILABLE FROM SOME MANUFACTURERS. PROVIDES INCREASED HEAT AND CHEMICAL RESISTANCE. USE CAUTION WHEN SPECIFYING. TYPICAL THICKNESS IS 1/4" - EPOXY RESIN AT THIS THICKNESS IS SUSCEPTIBLE TO DAMAGE DURING SHIPPING.

GLASS FIBER REINFORCED EPOXY RESIN AND CELLULOSE FIBER REINFORCED PHENOLIC RESIN IS ALSO AVAILABLE FROM SOME MANUFACTURERS WHICH ALSO PROVIDES INCREASED CHEMICAL RESISTANCE WITHOUT THE ISSUES OF BREAKAGE FOR EPOXY RESIN. VERIFY AVAILABILITY PRIOR TO SPECIFYING.

1. Glass Reinforced Polyester: 1/4-inch thick, press-molded, heat-converted, catalyzed glass reinforced polyester sheet. Color: Manufacturer's standard white.

ALWAYS INCLUDE BELOW.

2. Liner shall have a flame spread rating of 25 or less when tested in accordance with ASTM E-84.

INCLUDE BELOW FOR STANDARD BLACK EPOXY RESIN WORKING SURFACE IN HOOD.

B. Epoxy Resin Working Surface: 1-1/4-inch thick, dished to retain spillage.

1. Conform to specifications for epoxy resin top material properties outlined in Division 12 Section "Laboratory Casework".

IF RESIN TOPS ARE NOT SPECIFIED IN LAB CASEWORK SECTION: DELETE PARAGRAPH ABOVE AND RETAIN TWO PARAGRAPHS BELOW

2. Color: Black.

IF RESIN TOPS ARE SPECIFIED IN LAB CASEWORK SECTION: RETAIN TWO PARAGRAPHS ABOVE AND DELETE PARAGRAPH BELOW.

3. Physical Properties: Flexural strength - 4000 psi; compressive strength - 14,000 psi; hardness, Rockwell M-197; water absorption in 24 hours - 0.05%; heat distortion point - 400 deg. F; resistant to thermal shock.
   a. Workmanship: Cast surfaces very smooth, with factory cut-outs for sinks, drip grooves, and service fixtures. Plain butt type joints assembled with epoxy adhesive.

RETAIN BELOW FOR ISOTOPE-TYPE STAINLESS STEEL INTERIORS AND PERCHLORIC ACID HOODS. NOTE THAT MOST LOW-LEVEL RADIOISOTOPE WORK CAN BE CARRIED OUT IN REGULAR FUME HOODS. THEREFORE, IF RADIOISOTOPES ARE TO BE USED, CONSULT WITH OSEH TO DETERMINE WHICH TYPE OF HOOD TO SPECIFY.

PERCHLORIC ACID HOODS ALSO REQUIRE A WASH-DOWN SYSTEM FOR THE HOOD, EXHAUST DUCTWORK, AND EXHAUST FAN.

MODIFY LANGUAGE IN PARAGRAPH BELOW (I.E., CHANGE "RADIOISOTOPE" TO "PERCHLORIC" OR DELETE REFERENCE TO RADIOISOTOPE FOR NON-ISOTOPE HOODS).

C. Radioisotope (RI) Type Stainless Steel Liner and Work Surface: For applications where highly radioactive materials will be used with lead brick shielding, furnish seamless welded construction of the work surface with intersecting rear and interior end panels, and as follows:

1. Stainless Steel Lining: Radius corners, weld, grind smooth and polish to eliminate cracks and crevices.
   a. Punch hood side panels to receive remote controls and service fixtures at side of hood, as indicated. Furnish removable plug buttons for holes not used for indicated fixtures.
   b. Interior corners: 1/2 inch radius, seamless, coved.
   c. Stainless steel: 16 gage, AISI Type 302/304, with no. 4 finish.
2. Stainless Steel Working Surface: 14 gage, AISI Type 302/304, with no. 4 finish and 1/2 inch high raised "marine edge" around perimeter to retain spillage.

RETAIN THE FOLLOWING IF CUPSINK WILL BE INCLUDED IN STAINLESS STEEL TOP.

   a. Integrally weld stainless steel cupsinks to stainless steel work surfaces. Also see Plumbing Accessories article, below.

FOLLOWING REQUIREMENT PROVIDES SUFFICIENT LOAD CAPACITY FOR MOST LEAD BRICK SHIELDING ARRANGEMENTS - USUALLY RETAIN

   b. Reinforce to provide min. 200 lbs. per sq. ft. load capacity.

SELECT EITHER METAL OR WOOD UNDERSTRUCTURES FROM BELOW

2.9 FUME HOOD UNDERSTRUCTURES

A. Products: Subject to compliance with indicated requirements, provide products manufactured by one of the following:

1. Metal Units:
   a. Airmaster; Airmaster Systems Corp.
   b. BMC
   c. Kewaunee Scientific Equipment Corp.
   d. Mott Manufacturing
   e. Thermo Scientific: Hamilton Laboratory Furniture and Fume Hoods
2. Wood Units:

a. Kewaunee Scientific Equipment Corp.
b. Mott Manufacturing
c. Thermo Scientific Hamilton Laboratory

B. In general, provide metal base units complying with the following:

1. Toe Space: Approximately 4 inches high by 3 inches deep, closed metal with no open pockets. Open channel formations are not permitted.

DELETE BELOW IF NO METAL CABINETS

2. Exterior Metal: Mfr's standard with acid and alkali resistant baked-on finish. Match fume hood color.

DELETE BELOW IF NO WOOD CABINETS

C. In general, provide wood base units complying with the following:

1. Finish: Mfr's standard with acid and alkali resistant finish. Color to be selected by Architect from mfr's standard range of finishes.

DELETE THE FOLLOWING TWO REQUIREMENTS FOR FLAMMABLE STORAGE UNITS

2. Provide base cabinets with removable backs in cupboard areas to provide openings for access to plumbing lines and shut-off valves.
3. Provide space, cut-outs, and holes for pipes, conduits and fittings and cabinet bodies to accommodate services and their support-strut assemblies.

TYPICALLY PROVIDE BOTH FLAMMABLE STORAGE CABINET AND ACID STORAGE CABINET BELOW FUME HOOD.

NOTE THAT FLAMMABLE STORAGE CABINETS ARE NOT REQUIRED TO BE VENTED. IF THEY ARE VENTED, DO NOT VENT THROUGH HOOD, BUT USE A SEPARATE NON-FLAMMABLE VENT PIPE FROM THE CABINET DIRECTLY CONNECTED TO THE EXHAUST DUCT. INCLUDE A DETAIL ON THE DRAWINGS TO SHOW THE VENTING.

D. Flammable Liquid Storage Cabinets: Provide flammable liquid storage type constructed in compliance with NFPA 30 and UL or FM labeled. Requirements of NFPA 30 supersede other indicated requirements.

1. Label door exterior: “FLAMMABLE – KEEP FIRE AWAY”.

ACID STORAGE CABINETS ARE REQUIRED TO BE VENTED. COORDINATE WITH MECHANICAL ENGINEER TO ENSURE THAT VENTING DETAIL IS INCLUDED ON DRAWINGS. DELETE REFERENCE TO METAL OR WOOD AS APPROPRIATE.

E. Vented Metal and Wood Acid Storage Cabinets: Provide vented acid storage cabinets as indicated. Do not vent acid storage cabinets through hood. Provide all required vent piping and connections for direct connection to fume hood exhaust duct.

1. Minimum cabinet ventilation: 10 air changes per hour.

2. Line interior of acid storage cabinets with manufacturer's standard chemical-resistant polyethylene lining.
3. Label door exterior: "ACIDS"

2.10 PLUMBING ACCESSORIES

EDIT THIS ARTICLE BASED ON WHETHER RELATED SECTION "LABORATORY CASEWORK AND ACCESSORIES" IS INCLUDED.

ALWAYS RETAIN PARAGRAPH BELOW. IN THE UNUSUAL CIRCUMSTANCE THAT THERE IS MEDICAL GAS PIPING IN THE HOOD IT WILL REQUIRE A SPECIAL PIPING SPECIFICATION.

A. Plumbing, General: Refer to Related Sections and as follows:

1. Provide complete factory plumbing for hoods. Use materials as specified in Related Section. All natural gas piping shall be threaded black steel, Schedule 40.
2. Plumbing Fixtures: Remote controlled from face of hood.

IF CUPSINKS ARE REQUIRED, SELECT EPOXY RESIN TYPE UNLESS A RADIOISOTOPE HOOD WITH WELDED STAINLESS STEEL INTERIOR IS REQUIRED.

3. Cup Sinks: Cast epoxy resin, 3 inch by 6 inch with raised rim. Rim height to match the fume hood's working surface indented (dished edge) height. Coordinate cup sink location to avoid interference with dished edge of work surface.
4. Cup Sinks: Integrally welded 3 inch by 9 inch, Type 304 stainless steel, raised rim. Rim height to match the fume hood's working surface indented (dished edge) height. Coordinate cup sink location to avoid interference with dished edge of work surface.

INFORMATION BELOW MAY BE REDUNDANT WITH INFORMATION IN THE U-M LAB CASEWORK SECTION. EDIT PARAGRAPHS BELOW UP TO "ELECTRICAL ACCESSORIES" IF A LAB CASEWORK SECTION WILL BE INCLUDED IN THE PROJECT'S SPECIFICATIONS AND THAT SECTION COVERS HOOD PLUMBING FIXTURES.

B. Plumbing Service Fixtures: Provide pre-piped units complete with washers, locknuts, unions, nipples and other accessories for positive mounting to hood superstructures. Include wall flanges, escutcheons, handle extension rods, remote valves, and similar items required. Fabricate units to withstand test pressure of 100 psig.

1. Service fixtures are indicated on drawings by symbols, with design type of each fixture indicated by letter and number reference marks.
2. Material and Finish: Cast or forged red brass containing a minimum of 81 percent copper.
3. Exposed surfaces (including fittings and escutcheons): Acid and solvent resistant baked-on plastic coating of mfr's standard color. Fixtures fabricated of plastic are not acceptable except for use as high purity water faucets.

4. Service Outlets Identification: Provide colored plastic index disks with embossed identification letters at each service fixture handle or knob. Secure disks to fixture handles to be tamperproof.
5. Handles: Provide 3 arm or 4 arm forged brass handles for remote controls.
6. Valves and Faucets: Provide indicated fixtures with renewable barrel locked in valve body. Barrel shall contain all wearing parts, with renewable disks.
   a. Remote Control Valves: Provide valves controlled from face of hood. Use angle valves where required.

SELECT ONE OF THE OPTIONS BELOW

   b. Faucets: Wall-mounted, gooseneck style faucets.
   c. Faucets: Wall-mounted, hose cock water outlets.

ALWAYS INCLUDE BELOW

   d. Vacuum breaker: Provide in-line vacuum breaker complying with codes, installed on front face of hood.

2.11 ELECTRICAL ACCESSORIES

COORDINATE THIS ARTICLE WITH RELATED SECTION "LABORATORY CASEWORK AND ACCESSORIES". INFORMATION BELOW MAY BE REDUNDANT WITH INFORMATION IN THE U-M LAB CASEWORK SECTION. EDIT PARAGRAPHS BELOW IF A LAB CASEWORK SECTION WILL BE INCLUDED IN THE PROJECT'S SPECIFICATIONS AND THAT SECTION COVERS HOOD ELECTRICAL FIXTURES.

A. Electrical Fixtures, General: Refer to Related Sections and as follows:

1. Electrical Receptacles: Provide each hood with two duplex receptacles.
2. Lights: Provide each hood with a two-lamp light fixture of longest practicable length. Equip each fixture with two T-8, 32 watt, straight tube, rapid-start, multi-phosphor fluorescent lamps with a medium bi-pin base, color temperature of 3500 deg K, and a CRI of not less than 82.
   a. Shield light from hood interior by 1/4 inch thick safety glass or 1/8 inch thick tempered glass panel, sealed air tight into hood body with chemical resistant rubber channels. Set units so that lamps are easily replaceable from outside hood.
   b. Provide switch marked "Fume Hood Light" on face of hood.
   c. Provide only fixtures which carry the Underwriter's Laboratory (UL) label.

B. Internal Electrical Wiring: Provide complete factory wiring for hoods. Comply with requirements of the National Electrical Code.

1. Wire duplex receptacles and light to a single gang junction box for connection to Owner's 120V, single phase, 20 amp, AC supply.
2. Where fume hood is supplied with an air flow monitor or similar controls, wire monitor components together and to a second single gang junction box for connection to Owner's second 120V, single phase, 20 amp AC supply.

3. Provide wiring with a green ground conductor. Conduit shall not be used for ground.
4. Install all wiring in metallic conduit.

INFORMATION BELOW MAY BE REDUNDANT WITH INFORMATION IN THE U-M LAB CASEWORK SECTION. EDIT PARAGRAPHS BELOW IF A LAB CASEWORK SECTION WILL BE INCLUDED IN THE PROJECT'S SPECIFICATIONS AND THAT SECTION COVERS HOOD ELECTRICAL FIXTURES.

C. Electrical Service Fixtures: Provide units complete with box; necessary receptacles, terminals, switches, device plates, and fittings and gaskets required for mounting on casework. Provide only fixtures with UL label.

1. Service fixtures are indicated on drawings by symbols, with design type of each fixture indicated by letter and number reference marks.
2. Cover Plates: Provide stainless steel cover plates for AC receptacles and devices.
   a. Cover Plate Material: Stainless steel, Type 302, satin finish, with formed beveled edges.
3. Mark the following devices whether shown on drawings or not.
   a. AC receptacles, other than standard 120 volt duplex, grounding type. Indicate voltage and phase.
   b. Switches: Indicate equipment being controlled (e.g., "Fume Hood Light").
4. Finishes for Service Fixture Components: Furnish boxes with mfr's standard finish. Provide galvanized finish on ferrous fittings.

MODIFY BELOW IF USER REQUIRES 208 V. RECEPTACLES OR SPECIAL TYPE OF OUTLETS.

5. Receptacles: 125 volt, 20 amp, 2 pole, 3 wire, NEMA Type 5-20R, ground fault circuit interrupter type (at all locations), UL extra heavy duty grounding type with nylon or Lexan bodies.
   a. Ground fault circuit interrupter receptacles shall be rated for 2000 amps interrupting capacity and trip in 25 milliseconds or less when ground currents exceed 5 milliamps.

SELECT ONE OF THE FOLLOWING

   b. Color: Dark brown.
   c. Color: Ivory.
   d. Products: Subject to compliance with requirements, provide products of one of the following:
      Arrow Hart.
      Bryant.
      Hubbell.
      Leviton.
      Pass and Seymour.

USUALLY RETAIN BELOW FOR LIGHT SWITCH

6. Switches: Rated 120-277 volts AC and 20 amps, unless otherwise indicated, UL extra heavy duty.
   a. Furnish pilot light adjacent to toggle switch, where noted as "PL" adjacent to switch identification.

SELECT ONE OF THE FOLLOWING

b. Color: Dark brown.
c. Color: Ivory.
d. Products: Subject to compliance with requirements, provide products of one of the following:
Arrow Hart.
Bryant.
Hubbell.
Leviton.
Pass and Seymour.

PART 3 - EXECUTION

3.1 INSTALLATION

A. General: Install fume hoods plumb level, rigid, securely anchored to building and adjacent furniture in proper location, in accordance with manufacturer's instructions. Install closures neatly. Securely attach access panels, but provide for easy removal and secure re-attachment.

1. Coordinate sequence of work with Mechanical and Electrical trades and with laboratory casework and fixtures specified in Related Sections.

ALWAYS INCLUDE THE COMMISSIONING ARTICLE BELOW.

3.2 COMMISSIONING

A. Perform the commissioning activities as outlined in Division 01 Section "Full Project Commissioning" or "Project Commissioning for Small Projects" and other requirements of the Contract Documents.

3.3 FIELD QUALITY CONTROL

A. Field test each fume hood after completion of installation to verify proper operation of hoods in accordance with SEFA 1 Guidelines

USUALLY DELETE BELOW. CONSIDER AS INSTALLED TESTING ONLY FOR LARGE PROJECTS, AND AFTER CONSULTATION WITH U-M OSEH AND MECHANICAL ENGINEER. ADJUST PERCENTAGE OF FUME HOODS TO BE TESTED IF APPROPRIATE, AND INDICATE TYPES TO BE TESTED IF MULTIPLE TYPES ARE USED ON THE PROJECT.

B. Perform As Installed Containment Testing per ASHRAE 110 on 10% of installed fume hoods. Hoods shall be selected by the Commissioning Agent in consultation with U-M OSEH.

1. Demonstrate that hoods meet the performance criteria specified in Part 2. Remedy failing hoods and retest until hoods meet the performance criteria.
2. Provide a complete test report to the Commissioner immediately after each test.

3.4 ADJUST AND CLEAN

A. Moving Parts: Carefully check to insure: smooth, near-silent, and accurate operation; sash operation with one hand with uniform contact of rubber bumpers; counterbalance operation without interference.

B. Clean surfaces, including both sides of glass.

C. Damaged Work: Repair equal to new undamaged work, or replace with new units, as directed by Architect.

END OF SECTION 115313

UNIVERSITY OF MICHIGAN
ARCHITECTURE, ENGINEERING AND CONSTRUCTION

ARCHITECTURE & ENGINEERING
326 East Hoover, Mail Stop B
Ann Arbor, MI 48109-1002
Phone: 734-764-3414
Fax: 734-936-3334

BuildingName
The Description of the Project
P00000000 0000

SPECIFICATION DIVISION 11

NUMBER SECTION DESCRIPTION

DIVISION 11 EQUIPMENT
SECTION 115314 - FUME HOOD REFURBISHMENT

END OF CONTENTS TABLE

DIVISION 11 EQUIPMENT
SECTION 115314 - FUME HOOD REFURBISHMENT

USE THIS SECTION FOR ROUTINE CHECK AND REPAIR OF EXISTING FUME HOODS

PART 1 - GENERAL

1.1 SUMMARY

A. Work includes cleaning, painting, and routine maintenance as follows:

NOTE: OSEH REQUIRES REFURBISHED AND UPGRADED HOODS TO BE PROVIDED WITH FLOW ALARMS (ALARMS ARE WORK OF DIV. 23 AND 26). REMEMBER TO TELL ENGINEERS OF ALARM REQUIREMENT.

1. Provide electrostatic painting of Owner's existing fume hood superstructure exterior and existing fume hood base cabinet interior and exterior.
2. Remove existing hood work surface materials. Install new 1-1/4-inch thick epoxy resin work surface with raised "marine" edge. Color: Black.
3. Coat hood lining with epoxy paint.
4. Provide routine maintenance as follows:
   a. Lubricate moving parts.
   b. Check and adjust sash alignment; replace pulleys and cable.
   c. Check and adjust baffle operation.

B. Mechanical and Electrical work are specified in Division 22, 23 and 26 sections respectively.

C. Fume hood vent connections (from hood collar to hood exhaust system) is the work of Division 23 Sections.

D. Clean Surfaces, including both sides of glass.

PART 2 - PRODUCTS (NOT APPLICABLE)

PART 3 - EXECUTION (NOT APPLICABLE)

END OF SECTION 115314

UNIVERSITY OF MICHIGAN
ARCHITECTURE, ENGINEERING AND CONSTRUCTION

ARCHITECTURE & ENGINEERING
326 East Hoover, Mail Stop B
Ann Arbor, MI 48109-1002
Phone: 734-764-3414
Fax: 734-936-3334

BuildingName
The Description of the Project
P00000000 0000

SPECIFICATION DIVISION 12

NUMBER SECTION DESCRIPTION

DIVISION 12 FURNISHINGS
SECTION 122000 - WINDOW TREATMENT

END OF CONTENTS TABLE

DIVISION 12 FURNISHINGS
SECTION 122000 - WINDOW TREATMENT

PART 1 - GENERAL

1.1 SUMMARY

A. Extent of window treatment is indicated on drawings.

EDIT THE FOLLOWING TO INCLUDE VERTICAL BLINDS OR OTHER WINDOW TREATMENT REQUIRED

B. Types of window treatment include:

1. Venetian blinds.
2. Room darkening roller shades.

MODIFY THE FOLLOWING FOR BLIND POCKETS FABRICATED OF WOOD, OR DELETE IF NO BLIND POCKETS

C. Sheet metal blind pockets are included in Division 05 Section "Metal Fabrications".

1.2 SUBMITTALS

A. Product Data: Manufacturer's literature indicating compliance with requirements.

B. Samples: Submit samples of materials and finishes.

C. Shop Drawings: Submit shop drawings for installations not fully detailed in product data.

1.3 QUALITY ASSURANCE

A. Provide complete assemblies produced by one mfr for each type required including hardware, accessory items, mounting brackets, and fastenings.

B. Provide units which comply with NFPA 701 flammability test requirements.

PART 2 - PRODUCTS

2.1 ACCEPTABLE MANUFACTURERS

A. Manufacturer: Subject to compliance with requirements, provide products of one of the following:

1. Venetian Blinds:
   Levolor Window Fashions
   Hunter Douglas
   Springs Window Fashions; Bali
1. Roller Shades:
   Springs Window Fashions; Bali
   Draper Inc.; Flexshade
   OpenLight

MechoShade Systems, Inc.
Roll Ease, Skyline Series
SRF Enterprises, Inc.

2.2 HORIZONTAL BLINDS

BELOW DESCRIBES "RIVIERA" QUALITY BLINDS. BOTH LOWER AND HIGHER QUALITY BLINDS ARE AVAILABLE - REFER TO MANUFACTURER'S CATALOGS

A. Mfr's standard vertical lifting and horizontal tilting units complete with headrail, bottom rail, slats, and accessories as follows:

1. Headrail formed from sheet steel, min. 0.025 inch thick, into channel shaped section housing tilting mechanism; with top and end braces, top cradles, cord lock and required accessories; finished to match slats.
2. Bottom rail formed from sheet steel into tubular shape, with end caps, finished to match slats.
3. Aluminum slats formed from 0.0075-inch thick, spring-tempered aluminum; coated with manufacturer's standard baked enamel finish, resulting in nominal 0.0085-inch finished thickness; and as follows:
   a. Slat Width: 1 inch narrow slats.
   b. Ladders: Braided polyester cord with braided ladder rungs.
   c. Coverage: Not less than 15.7 slats per vertical foot.
   d. Color: As shown or as selected by Architect from mfr's standards.

B. Provide lifting mechanism consisting of crash-proof cord locks with cord separators, braided polyester or nylon lift cords, and cord equalizers.

C. Provide installation brackets including mounting hardware as recommended by mfr for installation indicated. In general, provide required fasteners, tracks, accessories required for a complete installation.

D. Operation: Provide full-tilting slats rotating approximately 180 degrees with operating controls on the left side; full height raising with lifting cord locks and cords on right hand side of units unless otherwise indicated.

2.3 ROOM DARKENING ROLLER SHADES

A. Fabric: Close-woven fiberglass; completely opaque. Provide horizontally seamless shades.

1. Color: White.

B. Support Hardware and Trim: Painted steel or aluminum fascia panel and end caps. Provide units with side and sill channels.

1. Color: White.

C. Roller Tube: Manufacturer's standard steel or aluminum units.

D. Operation: Manual, spring roller operation.

E. Bottom Weight: Manufacturer's standard aluminum unit.

F. Provide installation brackets including mounting hardware as recommended by manufacturer for installation indicated. In general, provide required fasteners tracks, accessories required for a complete installation.

PART 3 - EXECUTION

3.1 INSTALLATION

A. Comply with manufacturer's recommended installation procedures for indicated installation conditions.

B. Provide adequate clearance between sash and blinds to permit unencumbered operation of sash hardware.

C. Isolate metal parts from concrete and mortar to prevent galvanic action. Use tape or thick coating or other means recommended by manufacturer to effect separation.

END OF SECTION 122000

UNIVERSITY OF MICHIGAN
ARCHITECTURE, ENGINEERING AND CONSTRUCTION

ARCHITECTURE & ENGINEERING
326 East Hoover, Mail Stop B
Ann Arbor, MI 48109-1002
Phone: 734-764-3414
Fax: 734-936-3334

BuildingName
The Description of the Project
P00000000 0000

SPECIFICATION DIVISION 12

NUMBER SECTION DESCRIPTION

DIVISION 12 FURNISHINGS
SECTION 122200 - CURTAINS AND DRAPES

END OF CONTENTS TABLE

DIVISION 12 FURNISHINGS
SECTION 122200 - CURTAINS AND DRAPES

PART 1 - GENERAL

1.1 SUMMARY

A. Types of curtains include:

1. Manually operated, room dividing, lightproof curtains.
2. Manually operated, lightproof curtains over wall openings.

1.2 RELATED WORK OF OTHER SECTIONS

A. Division 05 Section "Metal Fabrications" for sheet metal valences and trim.

B. Division 06 Section "Interior Architectural Woodwork" for wood trim.

1.3 SUBMITTALS

A. Product Data: Manufacturer's literature indicating compliance with requirements.

B. Samples: Submit samples of materials and finishes.

C. Shop Drawings: Submit shop drawings for installations not fully detailed in product data.

1.4 QUALITY ASSURANCE

A. Provide complete assemblies produced by one mfr for each type required including hardware, accessory items, mounting brackets, and fastenings.

B. Provide units that are fire retardant treated to comply with NFPA 701 flammability test requirements.

PART 2 - PRODUCTS

2.1 CURTAIN FABRIC

A. Fabric, General: Fire-retardant treated rayon-acetate blend with vinyl backing. For all applications, provide double faced curtains with fabric material on both sides.

B. Room Dividing Curtains: Provide 2 curtains, both fabricated to cover half the room width plus 1-1/2 feet, resulting in 3-foot total overlap. Fabricate curtains without pleats.

1. Accessories: Provide Velcro male and female fastening strips for wall ends of curtain units, Apply continuous Velcro fasteners to wall ends of curtain units and on walls as shown, to provide positive, lightproof seal.

C. Curtains at Wall Openings: Fabricate curtains to cover opening widths plus 4 feet, resulting in 2-foot overlap at both sides of opening. Fabricate curtains without pleats.

BELOW EXAMPLE DESCRIBES A LIGHTPROOF CURTAIN FABRIC. MODIFY TO SUIT PROJECT.

D. Manufacturer/Product: Coral Co; "Stoplight II".

1. Color: "Flax".

2.2 TRACKS AND CARRIERS

A. Provide Manufacturer's standard anodized aluminum or painted steel units without splices.

1. Provide ball bearinged carrier and hook assemblies.

BELOW EXAMPLE DESCRIBES A CURTAIN TRACK. MODIFY TO SUIT PROJECT.

B. Manufacturer/Model: Provide products as follows:

1. Tracks: Graber; model 9-8191.

PART 3 - EXECUTION

3.1 INSTALLATION

A. Examine support work for tracks in presence of Installer. Correct conditions that would result in improper operation of curtain units.

B. Comply with manufacturer's recommended installation procedures for indicated installation conditions, and as indicated on drawings.

END OF SECTION 122200

UNIVERSITY OF MICHIGAN
ARCHITECTURE, ENGINEERING AND CONSTRUCTION

ARCHITECTURE & ENGINEERING
326 East Hoover, Mail Stop B
Ann Arbor, MI 48109-1002
Phone: 734-764-3414
Fax: 734-936-3334

BuildingName
The Description of the Project
P00000000 0000

SPECIFICATION DIVISION 12

NUMBER SECTION DESCRIPTION

DIVISION 12 FURNISHINGS
SECTION 123553 - LABORATORY CASEWORK

END OF CONTENTS TABLE

DIVISION 12 FURNISHINGS
SECTION 123553 - LABORATORY CASEWORK

11/03 CHANGED SPECIFICATIONS FOR EYE WASHES.

9/11: ADDED SOLID PHENOLIC (TRESPA) SHELVES, TACK STRIPS AND CUSTOM DRYING RACK ASSEMBLY.

PART 1 - GENERAL

1.1 SUMMARY

A. Extent of laboratory casework and fixtures is shown on drawings and schedules, and indicated by the provisions of this Section.

EDIT BELOW TO SUIT PROJECT.

B. Types of laboratory casework include:

Base cabinets.
Wall cabinets.
Storage cabinets.
Tables.
Shelf units.
Tops and curbs.
Sinks.
Mechanical and electrical service fixtures shown on drawings.
Other units as indicated.

DELETE BELOW IF NO P.LAM. CASEWORK.

C. Plastic laminate casework is included in Division 06 Section "Interior Architectural Woodwork".

DELETE BELOW IF NO FUME HOODS.

D. Fume hoods are included in Division 11 Section "Laboratory Fume Hoods".

DELETE BELOW IF NO ENVIRONMENTAL ROOMS.

E. Shelving in environmental room is specified in Division 13, "Controlled Environmental Rooms".

DELETE ONE OR BOTH BELOW IF NO MECHANICAL OR ELECTRICAL FITTINGS ARE INCLUDED.

F. Installation of plumbing fixtures supplied under this Section are included in Division 22 sections.

G. Installation of electrical fixtures supplied under this Section are included in Division 26 sections.

1.2 SUBMITTALS

A. Product Data: Submit mfr's product data indicating compliance with requirements.

B. Samples for Initial Selection: Submit sample cards of actual finishes to be used showing manufacturer's standard range of colors/finishes for the following:

1. Paint coating for metal furniture.

DELETE ABOVE IF NO METAL CASEWORK. DELETE BELOW IF NO WOOD CASEWORK.

2. Stains for wood furniture.

DELETE BELOW IF NO P.LAM TOPS, SHELVES, PRIVACY SCREENS, ETC.

3. Plastic laminate for accessory items.

USUALLY DELETE BELOW EXCEPT FOR CUSTOM FINISHES TO MATCH ARCHITECT'S SAMPLE.

C. Samples for Verification: Samples of each specified color/finish applied to each applicable type of substrate material. Provide samples sized not less than 4-inches by 4-inches and consisting of the actual materials specified for the final product.

D. Shop Drawings: Submit shop drawings for laboratory furniture showing plans, elevations, ends, cross-sections, service run spaces, location and type of service fixtures and as follows:

1. Layout of units with relation to surrounding walls, doors, windows, and other building components.
2. Details and location of anchorages and fitting to floors, walls, and base.
3. Details of shelf standard and bracket attachments, fittings, and fasteners, including relationship to laboratory tops, walls, ceilings, and other attachment points.
4. Coordinate shop drawings with other work involved.

E. Material Certificate: Provide manufacturer's certificate indicating compliance with specified requirements for stainless steel Type and Grade.

F. Product Test Reports: Based on evaluation of comprehensive tests performed by a qualified testing agency, indicating compliance of laboratory casework finishes and countertops with requirements specified for chemical and physical resistance.

1.3 QUALITY ASSURANCE

A. Source Limitations: Obtain laboratory casework, including countertops, sinks, service fittings, and accessories, through one source from a single manufacturer.

B. Product Standard: Comply with SEFA 8, "Laboratory Furniture--Casework, Shelving and Tables--Recommended Practices."

C. Catalog Standards: Mfr's catalog numbers are shown on drawings for convenience in identifying certain equipment. Unless modified by notation on drawings or otherwise specified, mfr's current catalog description for indicated number constitutes requirements for each such unit.

1. Provide cabinet door swings as indicated on drawings.

2. Use of catalog numbers and specific requirements set forth in drawings and specifications, does not preclude the use of equivalent products by other listed approved mfrs, but are given for the purpose of establishing a standard of design, quality of materials, product content, construction, and workmanship.
3. Numbers on drawings refer to products of the following:

SELECT ONE OF THE FOLLOWING, OR EDIT TO SUIT SELECTED PRODUCT CATALOG.

Thermo Scientific: Hamilton Laboratory Furniture
Kewaunee Scientific Equipment Corporation.

D. Flammable Liquid Storage Cabinets: Provide flammable liquid storage type constructed in compliance with NFPA 30 and UL or FM labeled.

E. Electrical Components, Devices, and Accessories: Listed and labeled as defined in NFPA 70, Article 100, by a testing agency acceptable to authorities having jurisdiction, and marked for intended use.

1.4 DELIVERY, STORAGE AND HANDLING

DELETE TWO REQUIREMENTS BELOW FOR MOST RENOVATION WORK.

A. Deliver wood laboratory furniture only after wet operations in building are completed.

B. Store completed wood laboratory furniture in a ventilated place, protected from the weather, with relative humidity therein of 50% or less, at 70 degrees F (22 degrees C).

C. Protect finished surfaces from soiling and damage during handling and installation. Keep covered with polyethylene film or other protective covering.

1.5 PROJECT CONDITIONS

A. Field Measurements: Check actual space available by accurate field measurement before fabrication. In addition to dimensions for clearance, check for obstructions, including columns, piping, ducts and conduits. Show recorded measurements on final shop drawings. Coordinate fabrication schedule with construction progress to avoid delay of work.

1. Where construction of new structures and systems is not complete, proceed with fabrication without field measurements, and coordinate fabrication tolerances to ensure proper fit of laboratory casework items without field modification.

PART 2 - PRODUCTS

2.1 ACCEPTABLE MANUFACTURERS

A. Manufacturers: Subject to compliance with requirements, provide the products of one of the following:

DELETE BELOW IF NO METAL CASEWORK. USUALLY RETAIN ALL MANUFACTURERS/SUPPLIERS LISTED BELOW

B. Metal Casework; associated suppliers:

1. Air Master Systems Cor., Millenia Series.
2. BMC Laboratory Cabinets; R.D. Landstra Associates.
3. Kewaunee Scientific Equipment Corp.; Farnell Equipment Co.
4. Laboratory Design & Supply; mfr. direct.
5. Mott Manufacturing Ltd.; Sigma Systems; Detroit Technical Equipment Company.

DELETE BELOW IF NO WOOD CASEWORK. USUALLY RETAIN ALL SUPPLIERS LISTED BELOW.

C. Wood Casework; associated suppliers:

1. Kewaunee Scientific Equipment Corp.; Farnell Equipment Co.
2. Mid Canada Millwork.
3. Mott Manufacturing Ltd.; Detroit Technical Equipment Company.

MANUFACTURER BELOW HAS ONLY FLUSH OVERLAY TYPE PRODUCTS. DO NOT INCLUDE IF PROJECT MUST INCLUDE ONLY LIPPED OVERLAY CASEWORK.

4. Laboratory Design & Supply; mfr. direct.

BELOW ARE NEW TO PML. INCLUDE FOR PROJECTS WITH ESTIMATED CASEWORK VALUE LESS THAN $100,000

5. CIFLab L-Line (lipped overlay) and E-line (full overlay); Stonecreek Interior Systems, LLC
6. Diversified Casework; R.D. Landstra Associates.
7. Wood-Metal Industries; Division of Wood-Mode, Inc.; Farnell Contracting.

USUALLY RETAIN ALL BELOW.

D. Resin Tops and Sinks:

Kewaunee Scientific; "Kemresin"
Durcon Co.; Durcon-IIA"
Epoxyn Products "Epoxyn"

E. Stainless Steel Sinks and Tops:

Elkay Co.
Just Manufacturing

F. Fiberglass Sinks:

Kreolab, Inc.

G. Solid Phenolic Shelves:

Kewaunee Scientific
Resistop

Trespa Athelon

H. Shelf Standards and Brackets:

Cooper B-Line, Inc.
Flex-Strut, Inc.
Kewaunee Scientific Equipment Corporation
Nu-Strut framing channel system, Kumar Industries, Inc.
Unistrut Corp.

I. Service Fittings:

Chicago Faucet
SPS (distilled water faucets)
T & S Brass
Watersaver
Wolverine Brass

DELETE THE ARTICLE BELOW IF NO METAL LABORATORY CASEWORK IN PROJECT.

2.2 METAL LABORATORY CASEWORK

A. Metal: Prime furniture steel, stretcher or roller leveled, free of scales, buckles, or other defects; ASTM A 366, Class 1 (matte) finish. Provide steel laboratory furniture components of following minimum U.S. Standard gages:

1. Back panels, inner door panels, drawer outer pan, inner pan and body, and shelves: 20 gage. Add reinforcement or use 18 gage material for shelves over 36" long.
2. Sides, ends, fixed backs, bottoms, tops, soffits, outer door pans, and other items not otherwise specifically noted: 18 gage. Bottoms may be 20 gage if reinforced.
3. Intermediate horizontal rails, table frame aprons and cross rails, center posts, top gussets: 16 gage.
4. Drawer runners, sink supports: 14 gage.
5. Leveling and corner gussets: 12 gage.

B. Casework Fabrication: Provide units which are square, fully reinforced with angles, gussets, and channels, integrally framed and welded to form a dirt and vermin retardant enclosure; and as follows:

1. Flange metal upward on three sides of cabinet bottoms.
2. Where applicable, reinforce base cabinets for heavy sink support.
3. Maintain uniform clearance around door and drawer fronts, not exceeding 3/32-inch.
4. Fabricate laboratory furniture to dimensions, profiles, and details shown.
5. Assemble units in shop in as large components as practicable to minimize field jointing.
6. Provide base cabinets with removable backs in cupboard areas to provide openings for access to plumbing lines and shut-off valves.
7. Fabricate units on precision dies to provide field interchangeability of drawers, hinged doors, and similar pieces.

C. Cabinet Components: Provide cabinets with the following, as applicable to selected units:

1. Flush Doors: Outer pan and inner pan formed and telescoped into box formation, with channel reinforcements full height on center of each pan. Fill doors solid with fire-resistant, sound-deadening material.
2. Glazed Doors: Hollow metal stiles and rails of similar construction as flush doors, with glass held in resilient channel or gasket material.
3. Hinged Doors: Mortise at flanges for hinges and reinforce with minimum 16 gage angle, welded inside inner pan at hinge edge. Provide nylon roller catches and stainless steel strike welded to door assembly.
4. Drawers: Assemble fronts from telescoping inner and outer pans, designed to eliminate raw edge of steel at top. Fabricate sides, back, and bottom of one piece, with rolled or formed top of sides for stiffening and comfortable grasp or drawer removal. Weld drawer front to sides, back, an bottom to form a single, integral unit. Provide drawers and rubber bumpers, runners and positive stops to prevent metal-to-metal contact or accidental removal.
5. Adjustable Shelves: Sides and ends formed down, and returned to front and back.
6. Glass for Glazed Doors: Double strength "B" quality.
7. Drawer Guides: Provide nylon rollers with metal guide channels, with integral stops to eliminate accidental removal of drawer. Include provisions to prevent rebounding action when doors are closed.
8. Filler Strips: Provide where required for closing space between cabinets and walls and ceilings, of same material and finish as cabinets. Hem exposed edges. Job fabricated fillers not acceptable.
9. Utility Space: Provide space, cut-outs, and holes for pipes, conduits and fittings and cabinet bodies to accommodate services and their support-strut assemblies.
10. Toe Space: Approximately 4" high by 3" deep, closed metal with no open pockets. Open channel formations are not permitted.
    a. Provide base cabinets with individual, integral toe kick bases. Separate toe kick bases independent of base cabinets are not permitted.

D. Steel Cabinet Finish: Coat metal casework as follows:

1. Pretreatment: After assembly, thoroughly clean surfaces of grease, dirt, oil, flux and other foreign matter by physical and chemical means. Treat entire unit with metallic phosphate process leaving surfaces with uniform, fine-grained, crystalline phosphate coating providing bond for subsequent finish.
2. Prime and Finish Coats: One coat high-bake primer followed by one or more coats of high-bake chemical-resistant enamel, to provide a hard and smooth, satin luster finish, applied to treated surfaces.

a. In concealed areas, including inside of doors and drawers, behind cross rails and mullions, inside of sub-base members, inside front and rear posts, and behind adjustable shelf front and back edges, provide rust inhibiting coating.

MODIFY BELOW FOR CUSTOM COLOR TO MATCH ARCHITECT'S SAMPLE, IF REQUIRED.

3. Colors: Unless otherwise indicated, color to be selected by Architect from mfr's standard palette of at least 5 colors.

DELETE THE ARTICLE BELOW IF NO WOOD CASEWORK IN PROJECT.

2.3 WOOD LABORATORY CASEWORK

A. Definitions: The following definitions apply to wood laboratory casework units:

1. Exposed portions of casework include surfaces visible when doors and drawers are closed. Bottoms of cases more than 4 feet above floor shall be considered as exposed. Visible members in open cases or behind glass doors shall be considered as exposed portions.

COORDINATE THE FOLLOWING REQUIREMENT WITH OWNER.

a. Sides to be concealed in final installation shall be considered exposed for purpose of determining material and finish requirements.

2. Semi-exposed portions of casework include those members behind opaque doors, such as shelves, divisions, interior faces and ends, case back, drawer sides, backs and bottoms, and back face of doors.
   a. Tops of cases 6 feet, 6-inches or more above floor, and drawer sides and back, shall be considered semi-exposed for purpose of material selection; concealed for purpose of finish selection.
3. Concealed portions of casework include sleepers, web frames, dust panels, interior faces and ends of cabinets with drawers only, and other surfaces not usually visible after installation, except as otherwise indicated.

B. Materials: Provide units fabricated of the following:

1. Exposed Materials: Do not use exposed faces of lighter-than-average color joined with exposed faces of darker-than-average color. Do not use two adjacent faces which are noticeably dissimilar in grain, figure and natural character markings.
   a. Solid Lumber: Clear, dry, sound, selected from compatible grain and color, no defects, and of same species as plywood panel exposed face veneer.

b. Plywood: Provide panels of 7-ply construction, with face veneer clear, selected for grain and color compatible with exposed solid lumber, and with no defects. Provide solid crossbandings without voids. Except for doors and drawer faces, edgeband exposed edges with solid wood of same species as face veneer. Provide panels with the following veneer for exposed faces:

SELECT RED OAK BELOW UNLESS MATCHING EXISTING CABINETS.

1) Species: Plain sliced red oak.
2) Species: Plain sliced white oak.
3) Species: Rotary cut birch.

2. Semi-Exposed Materials:
   a. Solid Lumber: Dry, sound, selected to eliminate appearance defects. Any species of hardwood, or softwood of similar color and grain to exposed portions.
   b. Plywood: Hardwood, PS-51, Good Grade (1), or softwood PS-1/ANSI A199.1, Group 1, A-A, INT, of species to resemble color and grain of exposed members.
3. Concealed Members:
   a. Solid Lumber or Plywood: Any species, with no defects affecting strength or utility.
   b. Hardboard: ANSI A135.4, Class 1, tempered; for use as drawer bottom, base cabinet interior bottom, and cabinet backs.
4. Unacceptable Materials: The following veneered materials are not permitted in cabinetry construction, regardless of exposure condition:
   a. Particleboard (pressboard or flakeboard).
   b. Oriented strand board (OSB).
   c. Laminated solid lumber panels.
   d. Tempered hardboard, except as otherwise indicated.

C. Wood Casework Fabrication: Fabricate laboratory furniture with manufacturer's standard dimensions, profiles, and details shown, unless otherwise indicated. Assemble units in the shop in as large components as practicable to minimize field jointing.

1. Provide units with manufacturer's standard door and drawer configuration, and as follows:

USUALLY SELECT LIPPED OVERLAY TYPE BELOW. NOT ALL MANUFACTURERS HAVE FLUSH OVERLAY OPTION.

   a. Lipped overlay type with rounded edges.
   b. Flush overlay type with square edges.

USUALLY SELECT GRAINING BELOW.

   c. Grain Pattern: Horizontal on drawers, vertical on doors.

BELOW IS OFFERED BY FISHER HAMILTON - USUALLY DELETE.

   d. Grain Pattern: Vertical, unmatched doors and drawer fronts.

FISHER-HAMILTON OFFERS ALL-VERTICAL OPTIONS ABOVE AND BELOW. BELOW REQUIRES FLUSH OVERLAY DOORS/DRAWERS.

e. Grain Pattern: Vertical, matched doors and drawer fronts.

2. Cabinet Bodies: Fabricate units with full (4-sided) top frame, and with horizontal intermediate rails between each door and drawer. Fabricate wood-framed glass doors (if included) with solid lumber frames.

3. Shelves Within Cabinets: Fabricate units of 3/4-inch thick plywood, with the following configurations for the indicated cabinet types included in Project:

a. Full depth in wall and counter-mounted units; half depth in base units.

COMMON PRACTICE IS TO SELECT ABOVE AND DELETE TWO OPTIONS BELOW. IF SPLIT-DEPTH SHELF OPTION IS SELECTED, SHOW ON DRAWINGS OR REVISE PARAGRAPH TO DESCRIBE DESIRED COMBINATION.

b. Full depth in base, wall and counter-mounted units.

c. Full depth in wall and counter-mounted units; split depth in base units as indicated on drawings.

D. Clear Wood Finish:

1. General: Apply laboratory casework manufacturer's standard two or three-coat, chemical-resistant, transparent finish consisting of sealer and catalyzed topcoat(s). After installation, touch up to refinish damaged portions equal to original factory finish.

2. Chemical and Physical Resistance of Finish System: Finish complies with acceptance levels of cabinet surface finish tests in SEFA 8 for Laboratory Grade Casework. Acceptance level for chemical spot test shall be no more than four Level 3 conditions.

3. Preparation: Sand exposed and semi-exposed components, using machine and hand methods. Machine marks, cross sanding, tool marks or other surface blemishes are not acceptable.

4. Exposed Portions: Carefully sand finishes after each surface treatment. Apply finishes as follows:

a. Sealer coat, if required.

SELECT 1 OF THE 3 STAINS FOLLOWING

b. Stain: None.

c. Stain: Selected from mfr's standard range of tones.

d. Stain: Non-standard, custom tone selected by Architect.

e. Mineral filler: for open grained wood, if required.

f. Multiple coats of highly chemical resistant finish, heat dried and sanded between each coat to produce a smooth, satin luster free of imperfections.

5. Semi-Exposed Portions: Apply sealer coat, stained to resemble exposed portions, and follow with heavy application of clear, water repellant finish coat to provide a smooth, washable surface.

6. Concealed Portions: One heavy coat of water repellant finish.

REMAINING PORTION OF THIS SECTION IS APPLICABLE TO BOTH WOOD AND METAL CASEWORK.

2.4 CASEWORK ACCESSORIES

A. Leg Shoes: Extruded vinyl or rubber, black, open bottom type.

DELETE BELOW IF BASE INCLUDED IN FLOORING SECTION.

B. Base Cabinet Molding: Extruded vinyl or rubber, black, 4-inches high. Provide as indicated on drawings, on casework items in contact with floor, and in the following locations:

1. Base and floor standing cabinet toe spaces.
2. Exposed sides of base and floor standing cabinets.
3. Filler and closure panels extending to floor.

C. Grilles: Provide clear anodized aluminum grilles and frames in sizes and at locations shown on drawings, and as follows:

1. CT-16; Titus, or equivalent.

D. Glass: ASTM C 1036 Type I (transparent glass, flat), Class 1 (clear), Quality q3 (glazing select); double strength.

USUALLY RETAIN ABOVE AND DELETE BELOW.

E. Tempered Glass: ASTM C 1048 Condition A (uncoated surfaces), Type I (transparent glass, flat), Class I (clear), Quality q3 (glazing select), Kind FT (fully tempered); 1/8-inch thick.

2.5 CASEWORK HARDWARE

A. Install hardware uniformly and precisely after final finishing is complete. Set hinges snug and flat in mortises unless otherwise indicated. Turn screws to flat seat. Adjust and align hardware so that moving parts operate freely and contact points meet accurately. Allow for final field adjustment after installation.

USUALLY SELECT BELOW AND DELETE OTHER HINGE OPTIONS.

1. Hinges: Manufacturer's standard 5-knuckle hinge with US26D satin chrome finish.
2. Hinges: Manufacturer's standard 5-knuckle, US32D stainless steel hinge with satin finish.

HINGE BELOW IS AVAILABLE WITH FLUSH OVERLAY STYLE ONLY.

3. Hinges: Manufacturer's standard concealed hinge for 170 deg. minimum swing.

USUALLY SELECT BELOW AND DELETE OTHER PULL OPTIONS.

4. Pulls: Manufacturer's standard surface mounted units of brushed aluminum.
5. Pulls: Manufacturer's standard surface mounted units of wire stock satin stainless steel.
6. Pulls: Manufacturer's standard flush recessed units of brushed aluminum.

BELOW NOT AVAILABLE FROM ALL MANUFACTURERS AND IN ALL STYLES - VERIFY BEFORE SELECTION.

7. Pulls: Manufacturer's standard flush recessed units of hardwood matching door/drawer face veneer species.
8. Catches: Manufacturer's standard mechanical roller type units. Magnetic catches are not acceptable.

9. Adjustable Shelf Supports (within cabinets): BHMA B84072, wrought steel, mortise mounted; or drilled holes with metal or plastic plug-type shelf supports.
10. Drawer Slides: Manufacturer's standard wood keel or metal ball bearing drawer slides. Where metal drawer metal slides are provided, comply with the following requirements:

INCLUDE ALL BELOW. ADJUST CAPACITY AS DESIRED. VOLUMES ROUGHLY CORRESPOND TO 18"W. BY 4"H. FOR 2100 CU. IN. AND 36"W. BY 8"H. FOR 4,600 CU. IN. INTENT IS TO ESTABLISH 100 LBF CAPACITY FOR ALL BUT VERY SMALL OR VERY LARGE AS DRAWERS.

a. Minimum Rated Capacity: 75 lbs. for drawers with interior volumes of 2,100 cu. inches or less.
b. Minimum Rated Capacity: 100 lbs. for drawers with a volume of more than 2,100 cu. inches, but less than or equal to 4,600 cu. inches.
c. Minimum Rated Capacity: 150 lbs.for drawers with a volume of more than 4,600 cu. inches.

DELETE BELOW IF NO LOCKS REQUIRED. MEDICAL SCHOOL REQUIRES ONE LOCKED DRAWER OR CUPBOARD PER BENCH RUN AND 1 EACH SIDE OF ISLAND UNITS. MODIFY BELOW TO ADD "BEST" UNITS FOR RE-KEYABLE CORE, GREATER SECURITY, OR KEYING WITH BUILDING. MODIFY KEYING REQUIREMENT TO SUIT PROJECT.

11. Drawer/Door Locks: Manufacturer's standard factory keyed, 5-pin lock. Provide 2 keys for each lock. Key each drawer separately, unless otherwise indicated.

DELETE BELOW IF NO LABEL HOLDERS.

12. Label Holders: Manufacturer's standard, surface applied [brass] [chrome] units, approximately 2-1/2-inches by 1-inch with exposed fasteners in matching finish.

2.6 TOPS

A. Tops, and Curbs: Provide smooth, clean, exposed tops and edges, in uniform plane, free of defects. Make exposed edges and corners uniformly rounded.

1. Top Sizes: Furnish tops in maximum practicable lengths.
2. Top Thicknesses: As indicated, with tolerance not exceeding plus or minus 1/32". Provide front and end overhang of 1" over base cabinets, formed with continuous drip groove on under surface 1/2" from edge.

B. Top Materials:

SELECT THE FOLLOWING TOP MATERIAL TYPES APPLICABLE TO PROJECT.

1. Cast Epoxy Resin: Factory molded tops of modified epoxy resin formulation, uniform mixture throughout full thickness. Provide indented, "Marine" edge tops as indicated.
   a. Finish: Non-glare black.
   b. Thickness: 1-inch.
   c. Physical Properties:
      1) Flexural strength - 4000 psi
      2) Compressive strength - 14,000 psi
      3) Hardness, Rockwell M-197

4) Water absorption in 24 hours - 0.05%
5) Heat distortion point - 400 deg. F (204 deg, C)
6) Resistant to thermal shock.

d. Workmanship: Cast surfaces very smooth, with factory cut-outs for sinks, drip grooves, and service fixtures.

2. Resin Impregnated Sandstone: Natural quarried hard sandstone with uniform grain and texture, free of seams and veins. Using manufacturer's standard vacuum process, impregnate stone throughout with multiple coats of thermo-setting resin. Bake coating at high temperture to ensure complete polymerization of resin and permanent bond with substrate. Apply additional coats to tops and edges to ensure required chemical resistance. Configure units with top and corner edges rounded to a 1/4 inch radius, and with bottom and abutting side edges broken.
   a. Finish: Non-specular smooth jet-black.

SELECT ONE BELOW

   b. Thickness: 1-1/4 inch.
   c. Thickness: 1 inch.
   d. Physical Properties: Density - 140 pcf; modulus of rupture - 3,200 psi; compressive strength - 15,900 psi; Brinnel hardness - 84.
   e. Workmanship: Complete machining, cutouts, drilling, grooving, sizing, and similar operations before impregnation.

3. Stainless Steel: 16 gage, ANSI type 304 with No. 4 satin finish, unless otherwise indicated.
   a. Weld shop joints, grind smooth and polish to become practically invisible. Provide hair-line butt jointed field joints, mechanically bolted through continuous channels welded to underside at edges. Keep field jointing to a minimum. Apply reinforcing channels to underside of top where necessary to insure rigidity without deflection.
   b. Extend top down to provide 1-1/4 inch thickness and 1/2 inch return flange under frame. Sound deaden entire under-surface with heavy build mastic coating.
   c. Form backsplash with 1/4 inch cove, integral with top surface.
   d. Provide 1/4 inch indented "marine edge" around perimeter of countertops throughout, except provide 1 inch high raised tops where indicated. In tops with sinks, pitch top surface two ways to bowl to provide adequate drainage without channeling or grooving.

4. Plastic Laminate (P. Lam.): Provide plastic laminate sheet, black color through entire thickness with satin finish, complying with NEMA LD-3, and as follows:
   a. Flat Tops: General purpose grade; 0.050 inches thick.
   b. Formed Tops: Post-forming grade; 0.042 inches thick.
   c. Sub-top: 3/4 inch thick sub-top of hardwood faced plywood, medium density overlaid plywood, or 45 pound phenolic resin bonded particleboard.
   d. Shop-bond laminate to sub-top with fully waterproof bond glue. Smooth sand surfaces to which plastic laminate is to be bonded. Apply standard phenolic backing sheet to back of panels.

e. Build up exposed edges of tops to 1-1/2 inch thickness. Self-edge exposed edges of top, splash, and openings with same plastic laminate used for tops.
f. Unless otherwise indicated, construct top and back splash of one piece with intersection coved. Intersections of end splash with top and back splash need not be coved.

2.7 SHELVES, STANDARDS AND BRACKETS

A. Acid Resistant Plastic Laminate Shelves:

CHANGE TO 1-1/4 IF DESIRED. 1" IS STANDARD FROM KEWAUNEE.

1. Core material: 1 inch thick particleboard, 40-50 pound density particleboard according to ANSI A208.1-2009, grade M-2 specifications.
2. Finish: Chemical Resistant high-pressure decorative laminate on both faces and all edges.
   a. Manufacturers:
      1) Wilsonart; Chemsurf
      2) Formica Group; Chemtop2
3. Color: Black.

B. Solid phenolic shelves:

1. Material: Solid phenolic core chemical and stain resistant panels. Material shall be a natural kraft paper based, saturated / impregnated with phenolic resin and processed under high heat and pressure to form a composite panel, to provide a work surface with high chemical resistant and abrasion resistant properties. Finished material shall be extremely hard and resistant to scratches and abrasion.
   a. Finish: Non-glare black.
   b. Thickness 1-inch.
   c. Edge: Standard edge with 3/16" Radius or Bevel Finish
   d. Physical Properties:
      1) Flexural strength: MD 23,000 psi / CD 15,000 psi
      2) Compressive strength: MD 31,000 psi / CD 25,000 psi
      3) Hardness, Rockwell M-95 to 115
      4) Water absorption in 24 hours - 0.35%

C. Cast Epoxy Resin Shelves: Provide epoxy resin shelving units conforming to epoxy resin top and curb specifications.

1. Thickness: 1 inch.

D. Shelf Support Structures: Fabricate wall-mounted, bench top mounted, ceiling-suspended, and other shelf support structures, including standards, brackets and other elements as shown on drawings. Provide manufacturer's standard pre-fabricated steel structural system, complete with connections, braces, fasteners, and anchorage devices as shown, or if not shown, as required to construct complete fabricated units that are tight, secure and capable of resisting expected loads without damage or permanent deformation.

BELOW IS EXAMPLE ONLY. MODIFY FOR VERY LIGHT OR HEAVY LOADING.

1. Expected Shelf Loads: Self-weight of shelf section plus live-loads as follows for size indicated:
   a. Less than 10-inches deep: 25 lbf per lineal foot.
   b. 10-inches deep to 14-inches deep: 50 lbf per lineal foot.
   c. Over 14-inches deep to 18-inches deep: 75 lbf per lineal foot.
   d. Over 18-inches deep: 100 lbf per lineal foot.

BELOW IS UNISTRUT'S PERMAGREEN FINISH. DELETE IF ANOTHER FINISH IS REQUIRED.

2. Finish: Factory applied standard paint coating.

DELETE BELOW IF PRIMED-ONLY FINISH ABOVE IS RETAINED.

3. Finish: Factory applied primer and alkyd paint finish coats.
   a. Finish Color: Match casework finish.
   b. Finish Color: Match fume hood exterior finish.
   c. Finish Color: Custom color selected by Architect.
   d. Finish Color: Selected by Architect from mfr's standard casework colors.

2.8 MISCELLANEOUS FABRICATIONS

DELETE BELOW IF NO WOOD PIPE CHASE COVER. REVISE TO SUIT PROJECT DETAILS. MODIFY FOR P.LAM. UNITS

A. Wood Pipe Enclosure Covers: Fabricate units of red oak veneer plywood matching casework. Construct with chrome plated screw fasteners and grommets to allow removal of a single panel, providing access to pipes and conduit concealed by the enclosure.

1. Provide indicated base trim as follows:
   a. "Fry Reglet"; Shape No. 1680; 6063-T5, .050" thick aluminum with black, "Duranar" finish. Install with mitered joints, neatly cut and butted tight.

DELETE BELOW IF NO METAL PIPE CHASE COVER. REVISE TO SUIT PROJECT DETAILS.

B. Metal Pipe Enclosure Covers: Fabricate units of metal materials matching casework. Provide chrome plated screw fasteners and grommets to allow removal of a single panel, providing access to pipes and conduit concealed by enclosure.

DELETE BELOW IF NO WOOD PRIVACY PANELS AT DESKS. MODIFY FOR P.LAM. UNITS

C. Wood Privacy Panels: Fabricate units of red oak veneer plywood matching casework; and of dimensions and configuration shown. Use concealed fasteners where practicable.

THE FOLLOWING IS A UNISTRUT-AND-NYLON BELT SYSTEM SIMILAR TO UNITS IN DOW CHEMISTRY BUILDING

D. Tank Restraints: Provide units as shown on drawings, complete with necessary fasteners and anchors, as required for a complete installation:

1. Nylon Strap: Provide 1 inch wide by 54 inch long nylon strap with brass buckle; equal to AGM Container Controls, Inc., Tuscon, Arizona http://www.agmcontainer.com (1-800-995-5590).

USUALLY MODIFY THE FOLLOWING TO ELIMINATE SPECIFIC MODEL NUMBERS. NUMBERS SHOULD BE INDICATED ON DRAWINGS.

2. Restraint Bracket: Provide continuous cold-rolled steel channel section equal to Unistrut P-3300. Provide P-1713 attachment brackets at both ends of nylon strap.

E. Tack strips: Provide 2" aluminum rail with tackable tan cork insert and flat end stops. Mount per manufacturer's recommendation using concealed fasteners.

1. Manufacturers:
   a. Cig-Jan Products, Ltd.
   b. Claridge Products and Equipment, Inc.
   c. Marsh Chalkboard Co.; Div. Marsh Lumber Co.
   d. Polyvision Corp.

F. Custom drying rack assembly: Refer to details on Drawings.

ADD DESCRIPTION HERE OF SPECIAL UNISTRUT FABRICATIONS.

2.9 SINKS

A. Tub Sinks, General: Fabricate tub sinks of monolithic construction without seams, with bottoms pitched to drain outlets, and as follows:

THE FOLLOWING REQUIREMENTS ARE APPLICABLE TO MOST TUB SINKS. SELECT MATERIAL TYPES APPLICABLE TO PROJECT.

1. Sizes: as indicated or mfr's closest stock size of equal or greater volume, as acceptable to Architect.
2. Outlets: 1-1/2 inch diameter, 2 3/4" inch minimum length, fabricated of cast epoxy resin, or stainless steel; of same material as sink.

DELETE BELOW IF NO RESIN TUB SINKS.

B. Cast Epoxy Resin Tub Sinks: Nonglare black, molded in one piece with surfaces smooth, corners coved and bottom sloped to outlet. Minimum physical properties and chemical resistance as specified for cast epoxy resin tops; 1/2-inch minimum thickness.

DELETE BELOW IF NO STAINLESS STEEL TUB SINKS.

C. Stainless Steel Tub Sinks: 18 gage, Type 316, with No. 4 satin finish.

1. Fabricate with horizontal and vertical corners rounded to at least 5/8 inch radius. Slope sink bottoms to pitch to outlet.
2. Provide double wall construction for sink partitions with top edge rounded to at least 1/2 inch diameter.
3. Continuous butt weld joints and provide factory punching for fixtures.

4. Apply approximately 1/8 inch thick heat resistant underseal to undersink surfaces for condensation prevention and sound deadening.
5. Where stainless steel sinks occur in stainless steel tops, factory assemble sinks and tops into one integral unit with welds ground smooth and polished to near invisibility.

DELETE BELOW IF NO CUP SINKS.

D. Cup Sinks: Fabricate cup sinks of cast epoxy resin or stainless steel as indicated on drawings. Conform to requirements specified for materials as specified for tops or sinks.

DELETE BELOW IF NO STAINLESS STEEL SCULLERY SINKS.

E. Stainless Steel Scullery Sinks: 18 gage, Type 316, with No. 4 satin finish.

1. Fabricate with horizontal and vertical corners rounded to at least 5/8 inch radius. Slope sink bottoms to pitch to outlet.
2. Provide double wall construction for sink partitions with top edge rounded to at least 1/2 inch diameter.
3. Continuous butt weld joints and provide factory punching for fixtures.
4. Apply approximately 1/8 inch thick heat resistant underseal to undersink surfaces for condensation prevention and sound deadening.
5. Where stainless steel sinks occur in stainless steel tops, factory assemble sinks and tops into one integral unit with welds ground smooth and polished to near invisibility.

REVIEW WITH MECHANICAL ENGINEER TO ENSURE THAT ALL LABORATORY SERVICE ITEMS ARE SPECIFIED AND COORDINATED. SPECIFICALLY, EMERGENCY SHOWERS AND EYEWASHES ARE SOMETIMES MISSED ON PROJECTS.

2.10 MECHANICAL SERVICE FIXTURES

A. Service Fixtures, General: Provide units complete with washers, locknuts, unions, nipples and other accessories for positive mounting to supporting laboratory units. Include wall and deck flanges, escutcheons, handle extension rods, remote valves, and similar items required. Fabricate units to withstand test pressure of 100 psig, unless otherwise indicated.

1. Service fixtures are indicated on drawings by symbols, with design type of each fixture indicated by letter and number reference marks.
2. Handles: Provide 3-arm or 4-arm forged brass handles for valves, stops, faucets, remote controls, and cocks, except for ground key cocks, and micro-adjustable needle cocks.
3. Hand of Fixtures: Provide right hand fixtures.
4. Service Outlets Identification: Provide colored plastic index disks with embossed identification letters at each service fixture handle or knob. Secure disks to fixture handles to be tamperproof.

B. Material and Finish: Fabricate service fixtures from cast or forged red brass containing a minimum of 81 percent copper. Exposed surfaces including fittings and escutcheons: polished chrome plated finish. Fixtures fabricated of plastic are not acceptable in any application, except as follows:

1. Distilled Water Fixtures: As indicated.
2. Fixtures Inside Fume Hoods: Solvent resistant plastic coated brass as indicated.

EDIT THE FOLLOWING TO SUIT PROJECT.

USE BELOW FOR ECONOMY GRADE UNITS. THESE CANNOT BE FINELY CONTROLLED AND ARE INTENDED FOR "ALL-ON" OR "ALL-OFF" USE.

C. Ground Key Type Hose Cocks: Tapered core and handle of one piece forged brass, ground and lapped, held in place under constant spring pressure.

USE BELOW WHERE RESEARCHERS REQUIRE UNITS THAT CAN BE FINELY CONTROLLED.

D. Needle Valve Type Hose Cocks: Provide units with renewable, self-centering floating cones and renewable seats of stainless steel or monel metal. Provide units designed for 100 psig operating pressure.

E. Water Valves and Faucets: Provide units with renewable barrel locked in valve body. Barrel shall contain all wearing parts, with renewable disks.

1. Furnish all water faucets with integral vacuum breakers in goose neck, regardless of model number indicated on drawings.

INCLUDE ABOVE EXCEPT IN CHEMISTRY BUILDING.

2. Provide bench-top mounted gooseneck water faucets with fittings required to allow gooseneck to swivel 360 degrees.
3. Provide each fixture with an integral vacuum breaker, regardless of model number indicated on drawings or in schedules.

BELOW IS STANDARD DI UNIT. NOTE THAT THIS PARAGRAPH SPECIFIES MODEL NUMBERS, WHICH IS ATYPICAL. USUALLY DELETE MODEL NUMBERS HERE AND INCLUDE THEM ON DRAWINGS.

F. Brass Distilled (Purified) Water Fixtures: Provide units fabricated of forged brass, with polypropylene internal construction, and with no metal parts in contact with water. Provide each fixture with self-closing valves (unless otherwise indicated), and with a polypropylene vacuum breaker:

1. Deck Mounted Fixtures: Model 7833SC-7110; Watersaver.

DELETE ABOVE OR BELOW, OR RETAIN BOTH TO SUIT PROJECT.

2. Panel Mounted Fixtures: Model 7834SC-7110; Watersaver.

DELETE TWO FIXTURES LISTED ABOVE AND SUBSTITUTE NON-SELF-CLOSING MODELS BELOW IF CLIENT WILL NOT ACCEPT THE SELF-CLOSING MODEL. FIRST FIXTUE LISTED IS DECK-MOUNTED AND SECOND FIXTURE IS PANEL-MOUNTED.

3. Deck Mounted Fixtures: Model 7833-7110; Watersaver.
4. Panel Mounted Fixtures: Model 7834-7110; Watersaver.

DELETE DI UNITS ABOVE AND INCLUDE ALL-PLASTIC CONSTRUCTION UNIT BELOW FOR ECONOMY AT REQUEST OR CLIENT.

G. PVC Distilled (Purified) Water Fixtures: Provide units fabricated of PVC, with no metal parts in contact with water. Provide each fixture with self-closing lever valve (unless otherwise indicated), and with a PVC vacuum breaker:

1. Product: Subject to compliance with requirements, provide Filterchem SVG-50"; Special Plastics Systems, Alhambra, Ca.

DELETE BELOW IF NONE.

H. Fixtures in Fume Hoods: Provide valves controlled from face of hood. Use angle valves where required.

SELECT ONE OF THE FOLLOWING FAUCET TYPES

1. Faucets: Provide wall-mounted gooseneck style faucets in hoods.
2. Faucets: Provide wall-mounted, hose cock water outlets in hoods.
   a. Backflow Preventer: Provide manufacturer's standard in-line backflow preventer (vacuum breaker) installed outside hood interior between valve body and outlet for each water faucet.
3. Hose Cocks: Provide units with acid and solvent resistant baked-on plastic coating in mfr's standard color.

DELETE BELOW IF NONE. NOTE THAT THIS PARAGRAPH SPECIFIES MODEL NUMBERS, WHICH IS ATYPICAL. USUALLY DELETE MODEL NUMBERS HERE AND INCLUDE THEM ON DRAWINGS.

I. Deck Mounted Emergency Eyewash: Provide swinging dual-head units activated by pulling the arm into position for use. Unit to have plastic heads and polished chrome arm:

1. Deck Mounted Unit: Model 7610; Haws.

SELECT ABOVE OR BELOW OR BOTH TO SUIT PROJECT. ABOVE IS MOUNTED AT THE REAR OF THE SINK ADJACENT TO THE FAUCET AND PULLS DOWN AND FORWARD FOR USE. BELOW IS MOUNTED ON THE SIDE OF THE SINK AND PULLS FORWARD HORIZONTALLY FOR USE. IF HANDICAP ACCESSIBILITY IS REQUIRED, A DIFFERENT TYPE OF FIXTURE MAY BE REQUIRED.

2. Deck Mounted Unit: Model 7611; Haws.

2.11 ELECTRICAL SERVICE FIXTURES

A. Service Fixtures: Provide units complete with metal housing or box; necessary receptacles, terminals, switches, pilot lights, device plates, and fittings and gaskets required for mounting on casework. Provide only fixtures with Underwriter's Laboratories label.

1. Service fixtures are indicated on drawings by symbols, with design type of each fixture indicated by letter and number reference marks.

B. Pedestal Type Fixtures: Cast aluminum housing complete with cover plates, neoprene gasket under base, and with specification grade receptacles or other devices indicated. Fabricate units with sloped single face or double face, as indicated, and concealed mounting holes in base for attaching to casework. Provide holes tapped for conduits.

C. Recessed Type Fixtures: Galvanized steel outlet box, size as required complete with cover plate and receptacles or other devices as indicated.

D. Cover Plates: Provide stainless steel cover plates for AC outlets and devices.

1. Stainless Steel, Type 302, satin finish, with formed beveled edges.

E. Mark the following devices whether shown on drawings or not.

1. AC receptacles, other than standard 120 volt duplex, grounding type. Indicate voltage and phase.

BELOW USUALLY NOT REQUIRED FUME HOOD LIGHT SWITCHES ARE INCLUDED IN FUME HOOD SECTION.

2. Switches: Indicate equipment being controlled (e.g., "PUMP OUTLET"). Provide units with pilot lights when located remotely from associated equipment or switch, where function is not obvious. Indicate equipment or circuit being energized.

F. Finishes for Electric Service Fixture Components: Mfr's standard finish. Provide galvanized finish on ferrous fittings.

G. Receptacles: Furnish AC receptacles for AC circuits, 125 volt, 20 amp, 2 pole, 3 wire, NEMA Type 5-20R, specification grade, extra heavy duty grounding type with nylon or Lexan bodies.

1. Provide GFCI (ground fault circuit interrupter) receptacles within fume hoods and within 6 feet of sink units. GFCI receptacles shall be rated for 2000 amps interrupting capacity and trip in 25 milliseconds or less when ground currents exceed 5 milliamps.

SELECT ONE OF THE FOLLOWING.

2. Color: Dark brown.
3. Color: Ivory.
4. Products: Subject to compliance with requirements, provide products of one of the following:
   Arrow Hart.
   Bryant.
   Hubbell.
   Leviton.
   Pass and Seymour.

RETAIN BELOW FOR FUME HOOD SWITCHES, AND OTHER AUXILLIARY EQUIPMENT SWITCHES (SUCH AS OUTLETS ON THE FACE OF, OR INSIDE, CABINETS).

H. Switches: Furnish single pole, double pole, or 3-way switches, as required, rated 120-277 volts AC and 20 amps, unless otherwise indicated.

1. Furnish pilot light adjacent to toggle switch, where noted as "PL" adjacent to switch identification.

SELECT ONE OF THE FOLLOWING.

2. Color: Dark brown.
3. Color: Ivory.
4. Products: Subject to compliance with requirements, provide products of one of the following:
   Arrow Hart.
   Bryant.
   Hubbell.
   Leviton.
   Pass and Seymour.

PART 3 - EXECUTION

3.1 INSTALLATION

A. General: Install plumb, level, true, and straight with no distortions. Shim as required, using concealed shims. Where laboratory furniture abuts other finished work, scribe and apply filler strips for accurate fit with fasteners concealed where practicable.

B. Base Cabinets: Set cabinets straight, plumb, and level. Adjust sub-tops within 1/16" of a single plane. Bolt continuous cabinets together. Unless otherwise noted, secure individual cabinets with not less than 2 fasteners into floor, where they do not adjoin other cabinets.

1. Where required, assemble units into one integral unit with joints flush, tight, and uniform. Align similar adjoining doors and drawers to a tolerance of 1/16.

C. Legs and Aprons: Install with exposed surfaces of legs approximately 1/8 in front of apron faces. Legs set flush or behind apron faces at conditions exposed-to-view are not permitted.

D. Fillers and Closure Panels: Provide matching filler panels at openings between cabinets and adjacent walls, whether or not indicated on drawings. Provide closure panels at openings into service chases below aprons, whether or not indicated on drawings. Fasten fillers at ends of island benches and all closure panels with Phillips-head screws set in matching grommets, for easy removal.

E. Wall Cabinets: Securely fasten to solid supporting material. Anchor, adjust, and align wall cabinets as specified for base cabinets.

RETAIN OR DELETE BELOW AS APPLICABLE TO PROJECT.

1. Where reinforcing of metal stud wall system is required, reinforcement is the work of other trades, but responsibility for accurate location and sizing of reinforcement is part of this work.
2. Adjust casework and hardware so that doors and drawers operate smoothly without warp and bind. Lubricate operating hardware as recommended by mfr.

3.2 INSTALLATION OF TOPS

A. Field Jointing: Where practicable, make in same manner as factory jointing using dowels, splines, adhesives, and fasteners recommended by mfr. Locate field joints as shown, factory prepared so there is no job site processing of top and edge surfaces.

B. Solid Hardwood, Stainless Steel and Plastic Laminate Tops: Use concealed clamping devices for field joints, locate within 6 inches of front, at back edges and at intervals not exceeding 24 inches. Tighten in accordance with mfr's instructions to exert a constant, heavy clamping pressure at joints.

C. Natural Stone and Epoxy Tops: Secure to cabinets with epoxy cement applied at each corner and along perimeter edges at not more than 48 inches on center.

D. Workmanship: Abut top and edge surfaces in one true plane, with internal supports placed to prevent deflection, and as follows:

1. Solid Hardwood, Stainless Steel and Plastic Laminate: Provide flush hairline joints in top units using clamping devices.
2. Natural Stone and Epoxy Resin: Use mfr's recommended adhesives and holding devices to provide joint widths not more than 1/16 inch wide at any location, completely filled and flush with abutting edges.

E. Where necessary to penetrate tops with fasteners, countersink heads approximately 1/8 inch and plug hole flush with material equal in chemical resistance, color, hardness, and texture to top surface.

F. After installation, carefully dress joints smooth , remove any surface scratches, clean and polish entire surface.

G. Provide holes and cutouts as required for mechanical and electrical service fixtures.

H. Provide scribe moldings for closures at junctures of top, curb and splash with walls as recommended by mfr for materials involved. Use chemical resistant, permanently elastic sealing compound where recommended by mfr.

3.3 INSTALLATION OF SHELVING UNITS

A. Erect steel channel support system using manufacturer-recommended connectors, fasteners and anchors. Where not otherwise indicated, anchor into concrete structure using expansion bolts designed for the condition encountered. Lay shelves into support structure and fasten each shelf from underside with wood screws.

3.4 INSTALLATION OF SINKS

A. Coordinate installation of sinks with work of Division 22.

1. Underside Installation: Use mfr's recommended adjustable support system for table-type and cabinet-type installations. Set top edge of sink unit firmly pressed to counter top, set in mfr's recommended chemical resistant sealing compound to produce a tight and fully leakproof joint. Adjust sink and securely support to prevent movement.
2. Semi-flush Installation: Use stainless steel sink frame, complete with clamping lugs and pads. Before setting, apply a full coat of mfr's recommended sealant under rim lip and along top. Omit sink frame in sinks fabricated with integral rim seal.

3.5 INSTALLATION OF ACCESSORIES

A. Install in a precise manner in accordance with manufacturer's directions. Turn screws to a flat seat; do not drive into place. Adjust moving parts to operate freely without excessive bind.

3.6 CLEANING, ADJUSTING AND REPAIR

A. Cleaning: Perform the following cleaning operations not more than 7 days prior to substantial completion:

1. Clean shop-finished surfaces, and touch-up as required by Architect, and remove or refinish damaged or soiled areas.
2. Clean glass surfaces installed under this section.
3. Remove construction debris from drawers and cabinet interiors. Clean drawer and cabinet interiors as required to remove dirt, grease, dust and film.
4. Dust exposed surfaces of casework and equipment; polish tops and curbs.

B. Adjust drawer and door operation of each unit to provide smooth operation, positive latching, and close fit within specified tolerances.

C. Repair, or remove and replace defective work as directed upon completion of installation.

END OF SECTION 123553

UNIVERSITY OF MICHIGAN
ARCHITECTURE, ENGINEERING AND CONSTRUCTION

ARCHITECTURE & ENGINEERING
326 East Hoover, Mail Stop B
Ann Arbor, MI 48109-1002
Phone: 734-764-3414
Fax: 734-936-3334

BuildingName
The Description of the Project
P00000000 0000

SPECIFICATION DIVISION 12

NUMBER SECTION DESCRIPTION

DIVISION 12 FURNISHINGS
SECTION 124600 - FURNISHING ACCESSORIES

END OF CONTENTS TABLE

DIVISION 12 FURNISHINGS
SECTION 124600 - FURNISHING ACCESSORIES

PART 1 - GENERAL

1.1 SUMMARY

A. This Section includes the following furniture accessories:

1. Waste receptacles.
2. Wall mounted nylon plastic coat hooks.

B. Extent of furniture accessories is indicated by provisions of this Section.

1.2 SUBMITTALS

A. Product data indicating compliance with requirements.

B. Installation instructions for installation on indicated surfaces.

C. Schedule showing locations by room number, and number of units required.

PART 2 - PRODUCTS

2.1 WASTE RECEPTACLES

A. Provide painted steel waste receptacle with vinyl bumper edge, and as follows:

SELECT ONE OF THE FOLLOWING COLORS

1. Color: Black.
2. Color: Beige.
3. Color: Grey.
4. Color: Putty.
5. Size: Approximately 21-inches by 11-inches by 30 inches.

B. Product: Model 96R; United Receptacle Co., or equivalent products of Steelcase Corp.

2.2 COAT HOOKS

A. Nylon Coat Hooks: Cast plastic two-piece units with L-shaped hook and round mounting rose. Provide units with concealed fasteners, designed for wall mounting, and as follows:

1. Size: 3-15/16-inch overall length; 2-3/4-inch rose.
2. Color: Selected by Architect from manufacturer's standard colors.

B. Manufacturer/Model: Subject to compliance with requirements, provide the following:

1. HEWI.

PART 3 - EXECUTION

DELETE ARTICLE BELOW IF NO COAT HOOKS INCLUDED.

3.1 INSTALLATION

A. Install coat hooks in compliance with manufacturer's printed instructions. Fasten units indicated to be mounted on drywall walls through reinforcing materials, or if no reinforcing exists, fasten through drywall with cadmium plated steel expansion type anchors.

3.2 WASTE RECEPTACLE SCHEDULE

A. Provide 1 waste receptacle in each toilet room.

END OF SECTION 124600

UNIVERSITY OF MICHIGAN
ARCHITECTURE, ENGINEERING AND CONSTRUCTION

ARCHITECTURE & ENGINEERING
326 East Hoover, Mail Stop B
Ann Arbor, MI 48109-1002
Phone: 734-764-3414
Fax: 734-936-3334

BuildingName
The Description of the Project
P00000000 0000

SPECIFICATION DIVISION 12

NUMBER SECTION DESCRIPTION

DIVISION 12 FURNISHINGS
SECTION 124813 – ENTRANCE FLOOR MATS AND FRAMES

END OF CONTENTS TABLE

DIVISION 12 FURNISHINGS
SECTION 124813 – ENTRANCE FLOOR MATS AND FRAMES

THE FOLLOWING UNIT HAS BEEN USED SUCCESSFULLY BY DOUG - OTHER TYPES AVAILABLE, REFER TO MANUFACTURER'S CATALOGS

PART 1 - GENERAL

1.1 SUMMARY

A. Extent of floor mats and frames is indicated on drawings.

B. Type of floor mat and frame includes:

1. Recessed units for retrofit application.

1.2 SUBMITTALS

A. Submit manufacturer's product literature indicating compliance with requirements.

B. Samples: Submit samples of carpet tread colors for initial selection.

PART 2 - PRODUCTS

2.1 RECESSED MAT

A. Fabrication: Fabricate tread rails of black co-extruded vinyl and acrylic with soft support legs to accommodate moderate imperfections in floor finish. Continuously connect tread rails in ball and socket arrangement. Fabricate assembly so that mat can be rolled up and removed for cleaning.

1. Spacing Between Rails: Less than 3/16".
2. Tread Surfaces: Colorfast, nylon carpet.
   a. Tread Color: Selected by Architect from manufacturer's full range of standard colors, of not less than 15 colors.
3. Mat Frame: Block-out design aluminum (for retrofit application) in clear anodized finish. Match frame fillers to treads. Furnish with corner locks and necessary anchors.

B. Manufacturer/Model: Provide products of Construction Specialties Inc,; "Treadline" model T1HCLB, or subject to compliance with requirements, equivalent products of Arden Architectural Specialties Inc., Balco Inc., J.L. Industries., MM Systems Corp., Pawling Corp., or Reese Enterprises Inc.

PART 3 - EXECUTION

3.1 INSTALLATION

A. Examine condition of floor prior to installing mat frame. If unacceptable for proper mat installation, correct deficiencies before installing frame.

B. Securely anchor frame to floor, in accordance with manufacturer instructions. Isolate metal parts from concrete and grout to prevent galvanic action. Use tape, thick coating or other means recommended by manufacturer to effect separation.

C. Install mat in frame. Ensure maximum 3/16-inch clearance between mat and frame. Repair or replace improperly fitting mat.

END OF SECTION 124813

UNIVERSITY OF MICHIGAN
ARCHITECTURE, ENGINEERING AND CONSTRUCTION

ARCHITECTURE & ENGINEERING
326 East Hoover, Mail Stop B
Ann Arbor, MI 48109-1002
Phone: 734-764-3414
Fax: 734-936-3334

BuildingName
The Description of the Project
P00000000 0000

SPECIFICATION DIVISION 13

NUMBER SECTION DESCRIPTION

DIVISION 13 SPECIAL CONSTRUCTION
SECTION 132100 - CONTROLLED ENVIRONMENT ROOMS

END OF CONTENTS TABLE

DIVISION 13 SPECIAL CONSTRUCTION
SECTION 132100 - CONTROLLED ENVIRONMENT ROOMS

SPECIAL ATTENTION SHOULD BE GIVEN TO COORDINATING WORK OF THIS SECTION WITH SECTION 123553 LABORATORY CASEWORK AND MECHANICAL AND ELECTRICAL WORK. SECTION 055000 "METAL FABRICATIONS" MAY BE REQUIRED TO SUPPORT EXTERIOR MOUNTED CONDENSER UNITS.

PART 1 - GENERAL

1.1 SUMMARY

A. Extent and type of controlled environment room are indicated on Drawings and by provisions of this Section.

B. Work included in this Section:

1. Plumbing and wiring related to lighting, alarm, control and refrigeration systems, ready for hook-up to building services are included in this Section.

DELETE BELOW IF HUMIDITY CONTROL SYSTEM NOT INCLUDED.

2. Plumbing and wiring related to humidity control system, complete and ready for hook-up to building services, are included in this Section.

USUALLY RETAIN BELOW. REVISE IN COORDINATION WITH ELECTRICAL ENGINEER IF THIS WORK WILL BE PERFORMED UNDER DIVISION 26.

3. An electrical panel, receptacles and related conduit, surface raceways, wiring, boxes, and connections are included in this Section.
4. Cutting and patching of penetrations in insulated sandwich panels for connection of plumbing and electrical services work of Divisions 22 and 26, is included in this Section.

DELETE BELOW IF SHELVING NOT INCLUDED IN THIS SECTION

5. Floor and wall mounted wire shelving are included in this Section.

C. Related Sections: The following Sections contain requirements that relate to this Section:

INCLUDE BELOW IF ROOM WILL BE INCLUDED AS AN ALTERNATE.

1. Division 01 Section "Alternates" for additional requirements related to this Section.

DELETE BELOW IF NONE. IF PARA RETAINED, MODIFY TO SUIT PROJECT.

2. Division 12 Section "Laboratory Casework" for laboratory furniture, tops, sinks, faucets and service fittings.

COORD. BELOW WITH ARTICLE "MECHANICAL AND ELECTRICAL SYSTEMS AND ACCESSORIES."

3. Division 22 for plumbing services and connections to sink and service fittings within controlled environment room.

COORDINATE BELOW WITH ELECTRICAL ENGINEER. REVISE BELOW AND COORDINATE WITH PLUMBING AND WIRING ARTICLE ABOVE IF OUTLETS ARE REQUIRED TO BE RECESSED IN WALLS.

4. Division 26 for connection of equipment to building electrical service.

1.2 QUALITY ASSURANCE

A. Fire-Rating: Panel construction shall meet UL flame spread rating of 25.

B. Sanitary Construction: Provide unit with National Sanitation Foundation (NSF) seal on door.

C. Personnel Safety: Comply with Occupational safety and Health Administration regulations regarding personnel alarms and equipment location.

D. Plumbing Systems: Comply with the requirements of the "Michigan Plumbing Code 20033.

E. Ventilation Systems: Comply with the requirements of the Michigan Building Code 2003 and Michigan Mechanical Code 2003 with respect to minimum ventilation requirements.

F. Electrical Equipment and Wiring:

1. Comply with requirements of the "National Electrical Code" of the National Fire Protection Association (NFPA).
2. Provide electrical components, including, but not limited to refrigeration equipment, lighting, receptacles, and heated door section listed and labeled by Underwriter's Laboratories, Inc. (UL) for electrical safety.
3. Provide control panels and electrical panels listed and labeled by UL, ETL, MET, or CSA.

1.3 SUBMITTALS

A. Product Data: Submit Manufacturer's literature indicating compliance with requirements, and the following:

1. Installation instructions.
2. Operating and maintenance instructions for each item of equipment.

B. Shop Drawings: Showing construction of box and ancillary equipment, including component data sheets, control diagrams, and operating sequence information.

1. Provide a detailed power riser diagram specific to the controlled environmental room to be supplied.

C. Pre-Training Submittals: Submit start-up, functional test, and performance test reports not less than 2 weeks prior to conducting training session.

D. Product Warranties: Submit manufacturer's standard written warranty for each environmental room covering, at minimum, one year, parts and labor.

1.4 DESIGN REQUIREMENTS

DELETE BELOW IF UNIT WILL NOT BE USED FOR CRYSTALLIZATION (WHICH REQUIRE VIBRATION RESTRICTIONS).

A. Crystallization Room: In environmental rooms designated "crystallization room", provide units with the following special features:

1. Provide quiet switches in lieu of standard mechanical relays and solenoids.
2. Provide self-closing, self-sealing doors.
3. Provide remote mounted compressor and condenser units.
4. Provide refrigeration system piping mounted on vibration isolators and not mounted along walls.

DELETE BELOW IF UNIT WILL NOT BE USED FOR ANIMAL HOLDING (WHICH REQUIRE NOISE RESTICTIONS).

B. Animal Room: In environmental rooms designated "animal room", provide the following special feature:

1. Provide quiet switches and relays in lieu of standard mechanical relays and solenoids.

1.5 PROJECT CONDITIONS

A. Existing Clearances: Clear headroom above the unit is restricted by piping and ductwork. Maximum clear dimension from the finished floor to underside of the lowest obstruction is as follows:

MODIFY EXMPLE BELOW TO SUIT ACTUAL PROJECT CONDITIONS.

1. feet, 9 inches.

PART 2 - PRODUCTS

2.1 ACCEPTABLE MANUFACTURERS

A. Manufacturer: Subject to compliance with requirements, provide products of one of the following:

Bahnson Environmental Specialties
Environmental Growth Chambers
Harris Environmental Systems, Inc.
Insulated-Structure, Ltd.
Nor-Lake, Inc.

2.2 ENVIRONMENTAL ROOM ENCLOSURE

A. Size: Environmental room dimensions are indicated on Drawings. Provide rooms of manufacturer's standard sizes, but within 12-inches of dimensions indicated on drawings.

IF HEIGHT NOT INDICATED ON DRAWINGS, INCLUDE ONE OF THE FOLLOWING. NOTE THAT IT WILL BE DIFFICULT OR IMPOSSIBLE TO INSTALL A GRID CEILING IN ROOMS LOWER THAN 8'-7".

1. Room Height: 7 feet, 7 inches outside dimension.

2. Room Height: 8 feet, 1 inch outside dimension.
3. Room Height: 8 feet, 7 inches outside dimension.
4. Room Height: 9 feet, 7 inches outside dimension.

B. Wall and Ceiling Panels: Manufacturer's standard rigid, foamed-in-place urethane insulation core with metal panel skins adhered to exterior and interior sides. Provide all mechanical latching devices, gasketing and trim required for positive seal between panels and neat finished appearance.

1. Panel Thickness: 4-inches
2. Thermal Performance: U-value of assembled panels not less than 0.29.
3. Panel Skins: Provide metal panel skins of indicated materials. Paint metal panels in areas exposed to view in finished construction.
   a. Exterior Floor and Ceiling: 14 gage galvanized steel.

BELOW IS TYPICAL, BUT OPTIONS INCLUDE STAINLESS STEEL AND GALVANIZED STEEL - CONSULT MFR'S LITERATURE.

   b. Exterior Wall Panels: 0.040-inch thick, stucco embossed, aluminum.
   c. Interior Wall Panels: 0.040-inch thick, stucco embossed, aluminum.
   d. Colors: Provide white interior and white exterior.

DELETE BELOW IF WALL-MOUNTED SHELVING, OR IF FLOOR-TO-CEILING UNISTRUT SUPPORTS WILL BE PROVIDED. COORDINATE BELOW WITH DRAWINGS.

4. Reinforcing: Provide reinforcing in the form of wood blocking or heavy-gage steel stripping, concealed within walls at locations indicated to receive wall mounted casework, shelving or equipment.

DELETE BELOW IF NO ELEVATED CO2 ROOMS

5. Panel Sealants for Elevated CO2 Room: In addition to requirement of mechanical latching device (cam-lock panels), provide silicone sealant at all panel joints for redundantly sealed, air-tight construction.

C. Doors: Provide units with the following characteristics:

1. Size: 36-inches by 78-inches.

USUALLY SELECT SWINGING TYPE BELOW.

2. Type: Flush mounted, swinging type.
3. Type: Sliding type.

SELECT SELF-SEALING FOR CRYSTALLIZATION ROOMS.

4. Operation: Self-closing hinges.
5. Operation: Self-closing, self-sealing.

MODIFY BELOW TO SUIT PROJECT REQUIREMENTS.

6. Observation Window: 12-inches by 12-inches (approximate dimension) triple pane observation window.

MODIFY BELOW TO SUIT PROJECT REQUIREMENTS.

   a. Electrically heat windows in freezer doors.

MODIFY BELOW TO SUIT PROJECT REQUIREMENTS.

7. Latching Hardware: Positive latching hardware with door handle and inside safety release. Provide cylinder locks in door handles, except in freezer unit (if applicable).

LIMIT KEYING INFORMATION TO BELOW. DO NOT INCLUDE SPECIFIC DEPARTMENTAL KEYING INFORMATION IN THIS SECTION.

   a. Manufacturer/Model of Cylinders: Best Co., only. Contact University of Michigan Key Office at (734) 764-3481 for cylinder and keying requirements.

RETAIN ALL BELOW.

8. Gaskets and Seals: Replaceable magnetic gaskets on sides and top, and adjustable sweep seals on bottom. Provide openings with stainless steel threshold.
9. Heat opening perimeter as required to prevent condensation.

INSULATED FLOORS BELOW MAY BE OMITTED IN WARM ROOMS AND COLD ROOMS WHERE NECESSARY FOR BARRIER-FREE APPLICATION OR HEIGHT RESTRICTIONS. IN COLD ROOMS, THIS CAN RESULT IN CONDENSATION ON UNDERSIDE OF THE SLAB, SO IT IS BEST TO CONSIDER ELIMINATING INSULATED FLOORS ONLY IN SLAB-ON-GRADE CONSTRUCTION.

D. Floors: Insulated panels of construction similar to wall panels, except able to withstand floor loads of 600 psf.

1. Panel Thickness: 3-1/2 inches, minimum.
2. Floor Finish: 14 gage galvanized steel.
3. Floor Covering: 1/8-inch thick diamond tread PVC mat in manufacturer's standard color.

INSULATED FLOORS REQUIRE RAMPS (UNLESS A DEPRESSED SLAB CAN BE PROVIDED). RAMPS CREATE BARRIERS TO ACCESS THAT MUST BE DEALT WITH - SEE NOTES BELOW.

E. Ramps: Provide ramp of type indicated, fabricated of minimum 1/8-inch thick Type 6061-T6 aluminum tread plate with diamond-check pattern, or flat aluminum plate with durable, non-skid coating. Provide fire-retardant-treated wood substructure designed to support structural loads equal to, or greater than, those specified for the insulated floor structure. Provide ramp of width indicated on Drawings, or if not indicated, 48 inches wide; and of indicated length or slope.

1. Fixed Exterior Ramp: Provide where indicated on Drawings, or if not indicated, one unit at each door where a transition from insulated floor to building floor occurs.

SELECT ABOVE OR BELOW.

2. Portable Exterior Ramp: Provide where indicated on Drawings, or if not indicated, one unit at each door where a transition from insulated floor to building floor occurs.

INCLUDE ONE LENGTH OPTION BELOW FOR EITHER OF THE ABOVE TYPES. ALL DISCUSSIONS ASSUME A 4-INCH TOTAL RISE.

OPTION BELOW WILL NOT COMPLY WITH STATE ACCESSIBIITY CODES OR ADA. 36 INCHES IS MFR STANDARD, BUT UM HAS HAD SUCCESS OBTIANING VARIANCES WITH THE 42-INCH EXTERIOR RAMP OPTION BELOW. THE STATE PREFERS THE 42-INCH LENGTH, WHICH GIVES THE CODE-REQUIRED 1:10 SLOPE FOR MAX. 6-INCH RISE (EXCEPTION MUST BE REQUESTED FOR THE MISSING LANDING AT DOOR).

a. Length: 42 inches.

OPTION BELOW DOES NOT NEED LANDING, ACCORDING TO MICHIGAN BUILDING CODE (LESS THAN 1:12), AND DOES NOT REQUIRE VARIANCE. USE THIS IF SPACE IS AVAILABLE.

b. Length: 50 inches.

USUALLY DELETE BELOW AND RETAIN ABOVE - MOST USERS DO NOT WANT AN INTERIOR RAMP SINCE IT CREATES A TRIPPING HAZARD. USE ONLY WHERE EXTERIOR RAMP CANOT BE PROVIDED BECAUSE OF SPACE CONSIDERATIONS. AN EXCEPTION FOR RAMP LENGTH AND MISSING LANDING IS REQUIRED.

3. Fixed Interior Ramp: Maximum 20-inches long, provided at door. Include non-skid PVC mat.

F. Trim Strips and Closure Panels: Provide closure and trim pieces as indicated. Use materials and finishes matching exterior panel skins.

G. Ceiling Plenum: No plenum within room.

SELECT EITHER ABOVE OR BELOW. NOTE THAT GRID CEILING MATERIAL WILL REDUCE AVAILABLE HEADROOM TO BELOW THE BOTTOM OF THE LOWEST MECHANICAL ELEMENT (USUALLY THE CONDENSATE DRAIN LINE OUT OF THE FAN COIL UNIT IN ROOM). DO NOT SELECT PLENUM OPTION WITH ROOMS SHORTER THAN 8'-7" UNDER ANY CIRCUMSTANCES.

GRID IS PREFERRED BY MED. SCHOOL WHICH MAY REQUIRE VERY HIGH AIR VELOCITIES DUE TO ELECTRICAL LOAD REQUIREMENTS. BE SURE TO INVESTIGATE AND RESOLVE POTENTIAL CONFLICTS BETWEEN AVAILABLE HEADROOM AND GRID.

H. Ceiling Plenum: Provide white acrylic plastic, 1/2-inch square, "open cell" grid type ceiling supported by medium duty, painted steel suspension system to form plenum for distribution of air and light. Secure grid to T-bar supports to prevent rattling.

FOR PROJECTS WITH MULTIPLE ENVIRONMENTAL ROOMS, CREATE SEPARATE "OPERATING REQUIREMENT" ARTICLES FOR EACH TYPE OF ROOM AND RE-TITLE ACCORDINGLY. EXAMPLE: "COLD ROOM OPERATING REQUIREMENTS" AND "WARM ROOM OPERATING REQUIREMENTS"; OR "ROOM TYPE NO. 1"/"ROOM TYPE NO. 2". ENSURE CONSISTANT NOMENCLATURE ON DRAWINGS.

2.3 ENVIRONMENTAL ROOM OPERATING REQUIREMENTS

A. System Operation, General: Provide units that are capable of maintaining selected set point(s), within indicated temperature and humidity control and uniformity ranges, when operated under the indicated maximum and minimum thermal loading conditions. Provide units with compressor running continuously, and with evaporator unit fan operating on demand. Size compressor and related components to operate under both minimum and maximum loading conditions without "short cycling," excessive wear on the compressor, or throttling of the hot gas bypass valve. Design units to operate without excessive compressor noise, and without high air velocities within the occupiable space of the room.

REVEIW THE FOLLOWING VALUE WITH ELECTRICAL ENGINEER.

1. Available Building Power Supply: 208V, 3 phase, 4 wire plus ground.

B. Environmental Control: Provide environmental rooms complying with the following temperature and humidity control requirements:

TEMPERATURE SET POINT OR RANGE MUST BE DETERMINED BY CLIENT.

BELOW DESCRIBES STANDARD COLDROOM WITH A FIXED SET POINT.

1. Temperature Set Point: 4 degrees C., constant.

BELOW DESCRIBES A ROOM CAPABLE OF A RANGE OF TEMPERATURES FROM WARM TO COLD.

2. Temperature Range: 0 to 60 degrees C., constant.

BELOW IS NOT RECOMMENDED PRACTICE. ELEVATED CO2 POSES HEALTH RISK.

3. to 60 degree C., elevated CO2 environment.
4. Temperature Control Range: Provide units capable of maintaining temperature within the following range, when measured at a single point within the room over time:

RETAIN ONE OF THE FOLLOWING VALUES IN CONSULTATION WITH CLIENT - USUALLY +/- 0.5 DEG C. IS ACCEPTABLE. NOISE ASSOCIATED WITH THE OPERATION OF THE VALVE TYPE REQUIRED FOR +/- 0.2 DEG. C. ABOVE HAS PROVED ANNOYING TO OCCUPANTS.

   a. +/- 0.2 deg. C.
   b. +/- 0.5 deg. C.

5. Uniformity Range: +/- 0.5 degree C, or better, when measured between a variety of points anywhere within the room, excluding areas of the room within 12 inches of walls, floor, and ceiling.
6. Humidity Range: As follows:

BELOW IS MOST COMMON. HUMIDITY CONTROL SYSTEMS ADD CONSIDERABLE COST AND COMPLICATIONS TO UNITS.

   a. Uncontrolled, except that room supplier is responsible for providing system which ensures that condensation will not form on horizontal or vertical surfaces within the room.

BELOW WILL KEEP CONDENSATION FROM FORMING ON COLD SURFACES OF TYPICAL 4 DEG. C. ROOM.

b. Less than 20 grains/lb.

RETAIN BELOW OR MODIFY FOR SPECIFIC REQUIREMENT OF RESEARCH BEING CONDUCTED.

c. Ambient to 90 percent RH.

USUALLY DELETE BELOW - ELEVATED CO2 ROOMS ARE RARE.

7. CO2 Range: 0 to 10 percent.

C. Thermal Loads: Provide environmental rooms capable of maintaining indicated controlled temperature and humidity conditions when operating under the following thermal loads:

CLIENT MUST DETERMINE DOOR OPENINGS BELOW. 8 PER HOUR IS A FAIRLY HIGH FREQUENCY OF USE.

1. Door Openings: Maximum of 8 per hour, for 8 working hours per day.
   a. Temperature and humidity range recovery time for a 5-second door open condition: Not more than 5 minutes.

CLIENT MUST DETERMINE OCCUPANTS BELOW. 2 IS USUALLY THE MAXIMUM.

2. Number of Occupants: Maximum of 2, for 8 working hours per day.
3. Lighting: As indicated in "Electrical Systems and Accessories" Article of this Section.

CONSULT WITH CLIENT TO DETERMINE APPROPRIATE HEAT LOAD FROM EQUIPMENT EXPECTED TO OPERATE WITHIN THE ROOM, AND DURATION.

4. Owner's Equipment: Minimum thermal load from Owner's movable equipment within the room is a continuous zero-load condition. Maximum thermal load from Owner's movable equipment within the room is as follows:

SELECT VALUES BELOW IN COORDINATION WITH OWNER. NOTE THAT 1 KW IS FREQUENTLY ACCEPTABLE. NOTE THAT POSSIBLE THERMAL LOAD CANNOT EXCEED AVAILABLE ELECTRICAL POWER, AND IS FREQUENTLY MUCH LESS THAN THAT VALUE. CONSULT WITH MECHANICAL ENGINEER IF IN DOUBT.

   a. kilowatts, operating for 24 hours per day.
   b. kilowatts, operating for 8 hours per day.
   c. kilowatts, operating for 8 hours per day.

IF HUMIDITY CONTROL IS REQUIRED, ADD HUMIDITY-AFFECTING EQUIPMENT SUCH AS WATER BATHS HERE.

5. Ambient Conditions Exterior to Room: 60 to 80 deg. F.

DELETE BELOW IF NO FREEZER UNIT

2.4 FREEZER ROOM OPERATING REQUIREMENTS

A. System Operation, General: Provide units that are capable of maintaining selected set point, within the indicated temperature control and uniformity ranges, when operated under the indicated maximum and minimum thermal loading conditions.

B. Environmental Control: Provide freezer rooms complying with the following temperature control requirements:

1. Temperature Set Point: Minus 20 degrees C., constant.
2. Temperature Control Range: +/- 0.5 deg. C., when measured at a single point within the room over time.
   a. +/- 0.5 deg. C.
3. Uniformity Range: +/- 0.5 deg. C, or better, when measured between a variety of points anywhere within the room, excluding areas of the room within 12 inches of walls, floor, and ceiling.
4. Humidity: Uncontrolled.

C. Thermal Loads: Provide freezer rooms capable of maintaining indicated controlled temperature when operating under the following thermal loads:

1. Door Openings: 4 per hour, during 8 working hours per day.
2. Number of People: Maximum of 1, for a duration of 5 minutes or less.
3. Lighting: As indicated in "Electrical Systems and Accessories" Article of this Section.

BELOW IS AN EXAMPLE ONLY. VERIFY WITH CLIENT AND EDIT TO SUIT ACTUAL CONDITIONS.

4. Product Load: Approximately 1 gallon of room temperature liquid introduced at 24 hour intervals.
5. Ambient Conditions Exterior to Room: 60 to 80 deg. F.

2.5 PLUMBING AND REFRIGERATION SYSTEMS AND ACCESSORIES

A. Refrigeration, General: Provide units with factory installed refrigeration systems, complying with indicated requirements of "Operating Requirements" Article of this Section, and as follows:

1. Plumbing: Provide factory-and-field installed equipment, including piping, fittings and connections required to provide a complete, ready-to-operate refrigeration system.
   a. Use pre-charged coolant lines where possible.
2. Electrical: Provide factory-and-field installed conduit, wiring, fittings and connections (including compressor disconnect switch) required to provide a complete, ready-to-operate refrigeration system. Terminate wiring in power panel as indicated in "Electrical Systems and Accessories" Article of this Section.

B. Condensing Unit: Factory assemble compressor/condenser units using UL listed or recognized components. Compressor shall be of semi-hermetic type. Use manufacturer's standard non-CFC refrigerant for condition of use. Pre-wire and factory pipe units.

CONSULT WITH MECHANICAL ENGINEER WHEN SELECTING SYSTEM TYPE. CURRENT PREFERENCE IS FOR WATER-COOLED SYSTEMS.

RETAIN BELOW FOR WATER-COOLED SYSTEMS. THESE SYSTEMS REQUIRE EITHER A BUILDING DOMESTIC WATER OR CHILLED WATER SUPPLY. BELOW IS FOR CHILLED WATER SUPPLY WITH DOMESTIC WATER BACK-UP.

1. System Type: Provide controlled environment room with water-cooled refrigeration system, for connection to building chilled water supply with domestic water back-up system. Include a control valve to throttle chilled water based on demand, and designed for a 10 deg. F. temperature rise.

MODIFY BELOW IN CONSULTATION WITH MECHANICAL ENGINEER.

a. Chilled Water Temperature: Approximately 45 deg. F.
b. Domestic Water Temperature: Approximately 65 deg. F.

SELECT ONE MOUNTING LOCATION FROM THREE CHOICES BELOW - CRYSTALLIZATION ROOMS MUST HAVE REMOTE MOUNTED EQUIPMENT. INSTALLATIONS ON COLDROOM ROOF MAY BE NOISY. A CLEAR, WRITTEN DESCRIPTION OF THE LOCATION MAY BE SUBSTITUTED HERE FOR A LOCATION DRAWING.

c. Mounting Location: Mount unit on roof of cold room.
d. Mounting Location: Building interior, as indicated on Drawings.
e. Mounting Location: Building exterior, as indicated on Drawings.

USUALLY INCLUDE BELOW, EXCEPT FOR REMOTE INSTALLATIONS WHERE NOISE AND VIBRATION TRANSMISSION ARE NOT CRITICAL.

f. Mounting Type: Mount system components on a single steel frame. Mount compressor on spring isolators sized for specific equipment provided.

RETAIN BELOW FOR AIR-COOLED SYSTEMS. THESE SYSTEMS REQUIRE MOUNTING THE CONDENSER UNIT OUTSIDE THE BUILDING AND SHOULD NOT BE RUN MORE THAN 50-75 FEET FROM THE ROOM.

2. System Type: Provide controlled environment room with an air-cooled refrigeration system.

SELECT ABOVE OR BELOW MOUNTING LOCATION - NOTE THAT CRYSTALLIZATION ROOMS SHOULD HAVE REMOTE MOUNTED REFRIGERATION EQUIPMENT

a. Mount refrigeration system on building exterior as shown. Provide exterior mounted refrigeration units with all-weather hood and low-ambient controls, suitable for local climate.

USUALLY DELETE BELOW FOR EXTERIOR INSTALLATIONS, UNLESS NOISE AND VIBRATION CONTROL ARE IMPORTANT.

b. Mounting Type: Mount system components on a single steel frame. Mount compressor on spring isolators sized for specific equipment provided.

BELOW MAKES DRAIN PIPE FROM CONDENSATION PAN A RESPOSIBILITY OF THE ROOM MANUFACTURER. SHOW OR NOTE ROUTE OF DRAIN PIPE (USUALLY TO A SINK OR OTHER WASTE WITHIN THE ROOM) ON DRAWINGS. IF NO SINKS ARE INCLUDED IN THE ROOM, CONSULT WITH MECHANICAL ENGINEER AND POSSIBLY INCLUDE SUBPARA BELOW TO LIMIT ROOM MANUFACTURER'S RESPONSIBILITY TO STUB-OUT ONLY.

C. Evaporator Unit: Provide forced-air type, designed for ceiling installation, complete with condensation collection pan, drain pipe, and, where necessary, condensate pump; and terminated with an air gap at location shown on Drawings, unless otherwise indicated. Provide evaporator units which are UL listed or recognized.

1. Provide units with defroster with automatic, programmable, timed operation.

USUALLY DELETE BELOW, UNLESS COORD. WITH MECHANICAL ENGINEER RESULTS IN DIVISION 15 BEING RESPONSIBLE FOR THE PLUMBING.

2. Stub out drain pipe from condensation collection pan for connection under Division 22.

PRIOR TO EDITING THE PARAGRAPH BELOW, DETERMINE WHETHER ROOM WILL BE OCCUPIED (DEFINED AS ONE OR MORE PERSONS SPENDING ONE HOUR OR MORE CONTINUOUSLY IN THE ROOM AT ANY GIVEN TIME). IF ROOM IS OCCUPIED, INCLUDE THE STANDARD BELOW. IF THE ROOM IS DETERMINED TO BE UNOCCUPIED, ELIMINATE PARAGRAPH BELOW.

D. Ventilation: Built-in fresh-air ventilation system. Comply with the standards below:

BELOW DESCRIBES A SYSTEM IN WHICH VENTILATION AIR IS SUPPLIED FROM THE ROOM IN WHICH THE ENVIRONMENTAL ROOM IS LOCATED. IT ASSUMES THAT THE AIR HANDLING UNIT IS PROVIDING 100% OUTSIDE AIR. IF THE AHU IS PROVIDING LESS THAN 100% O.A., THE MECHANICAL ENGINEER SHOULD MODIFY THE SPECIFICATIONS ACCORDINGLY.

1. Ventilation air supplied from the room within which the package environmental room is located and routed directly to the evaporator inlet. Return air shall be vented through a relief damper in the roof. System shall have an electrically driven centrifugal type ceiling fan. Blade type fans are not acceptable: Minimum 20 cfm per person.

SELECT OPTION BELOW IF ROOM WILL BE UNOCCUPIED OR WILL BE A FREEZER ROOM. IF THIS OPTION IS RETAINED BE SURE TO DESIGNATE ON DRAWINGS WHICH ROOMS MEET THE CRITERIA BELOW. IF NO VENTILATION IS TO BE PROVIDED, BE SURE TO NOTIFY THE CLIENTS THAT THE FOLLOWING SIGN MUST BE POSTED ON THE OUTSIDE OF THE ENVIRONMENTAL ROOM: "NOT FOR USE WITH FLAMMABLE SOLVENTS IN QUANTITIES GREATER THAN 1 L."

E. Omit ventilation in freezer rooms and in unoccupied storage rooms which are designated thus on the Drawings.

F. Humidification System: Manufacturer's standard, electrically powered steam generator, for direct injection of steam into room supply air stream ahead of cooling coils. Provide unit ready for connection to building purified water system, and capable of meeting humidity set point and control range indicated under "Operating Requirements" Article of this Section, and as follows:

A CLEAR, WRITTEN DESCRIPTION COULD BE SUBSTITUTED HERE FOR A LOCATION DRAWING.

1. Location: As shown on Drawing.

2. Duct the humidifier output through the evaporator unit mounted to the environmental room ceiling.
3. Interlock humidifier and cooling controls as required to provide stable interior temperature and humidity ranges.

DELETE BELOW IF NO DEHUMIDIFICATION SYSTEM REQUIRED. MODIFY TO INDICATE TITLE OF DIVISION 15 SECTION REFERENCED IN PARA.

G. Dehumidification System: Manufacturer's standard desiccant-type air dryer system complete with required sheet metal ductwork between controlled environment room and dehumidifier unit. Connect unit to exhaust duct, specified in Division 23 Section " ". Provide unit capable of meeting humidity range control indicated under "Operating Requirements" Article of this Section, and the following:

A CLEAR, WRITTEN DESCRIPTION COULD BE SUBSTITUTED HERE FOR A LOCATION DRAWING.

1. Location: As shown on Drawing.
2. Duct the dehumidifier output through evaporator unit mounted to the environmental room ceiling.
3. Interlock dehumidifier and cooling controls as required to provide stable interior temperature and humidity ranges.
4. Acceptable Models: Subject to compliance with requirements, provide units manufactured by one of the following:
   a. Munters Cargocaire.
   b. Brye-Aire.
   c. Low-Humidity Systems.

USUALLY DELETE BELOW - MAY BE INCLUDED FOR FREEZER ROOMS TO PERMIT DEFROSTING.

H. Floor Drain: Provide indicated floor drain and cover in environmental room.

DELETE BELOW IF NO ELEVATED CO2 ROOM.

I. CO2 Sensor and Injection System: Provide CO2 Injection System with digital CO2 Controller with Thermistor Thermal Conductivity Cell and as follows:

1. Operation: Device measuring electrical conductivity of CO2, with factory installed sensors located for optimum performance. Interlock with control mechanism for release of CO2 into air supply of room. Release of CO2 shall be intermittent and only as required to maintain desired CO2 levels. Continuous flow devices are not permitted.
2. Controller Range: 0 to 20 percent.
3. Controller Sensitivity: +/- 0.1 percent.
4. Display: Digital readout of CO2 concentration in environmental room control panel.
5. Fabrication: Factory pre-assemble and test unit in presence of Owner's representative. Notify Owner at least 15 days before test.

2.6 ELECTRICAL SYSTEMS AND ACCESSORIES

A. General: Provide factory installed conduit, wiring, switches, fittings and connections for each electrically powered accessory and item of equipment required by provisions of this Section. Terminate wiring in an electrical panel as indicated in this Article.

CONTROLLER BELOW IS ALWAYS REQUIRED.

B. Controllers: Manufacturer's standard digital electronic control unit with lighted digital display and controls and as follows:

DELETE BELOW IF NO ANIMAL OR CRYSTALLIZATION ROOMS.

1. Mechanical relays are not permitted.

SELECT ONE OF THE FOLLOWING TO SUIT PROJECT.

2. Type: Temperature controller.
3. Type: Temperature and humidity controller.

RECORDER BELOW MAY BE OMITTED FOR SMALL SAVINGS IF APPROVED BY THE CLIENT.

C. Recorders: Manufacturer's standard chart recorder with seven day movement and 10-inch diameter chart for recording conditions within the environmental room. Provide 100 additional papers for future use.

1. Type: Temperature recorder with single pen.

ABOVE IS FOR ENVIRONMENTAL ROOM WITHOUT HUMIDITY CONTROL. BELOW IS FOR HUMIDITY-CONTROLLED ROOMS.

2. Type: Temperature and humidity recorder with dry and wet bulb sensing for recording temperature and humidity, respectively. Provide a dual-pen unit for independent record of temperature and relative humidity conditions.

D. Lighting: Fluorescent lighting with vapor proof fixtures and electrical components and cold weather ballasts capable of operation for indicated room condition without perceivable light flickering.

USUALLY RETAIN BELOW.

1. Cold Rooms and Combination Warm-and-Cold Rooms: Design lighting to provide light level of 70 foot-candles at 40 inches above finished floor at 4 deg. C.

DELETE BELOW IF NO FREEZER ROOMS.

2. Freezer: Design lighting to provide light level of 40 foot-candles at 40 inches above finished floor at minus 20 deg. C.

DELETE BELOW IF NO WARM-ONLY ROOMS.

3. Warm Rooms: Design lighting to provide light level of 70 foot-candles at 40 inches above finished floor at 30 deg. C.

E. Switches for Light Fixtures and Outlets: Furnish single pole, double pole, or 3-way switches, as required, rated 120-277 volts AC and 20 amps, unless otherwise indicated. Locate light fixture switches as indicated on Drawings, or if not otherwise indicated, within room next to the latch side of the door.

DELETE BELOW IF NO SWITCHED OUTLETS. COORD. "PL" DESIGNATION ON DRAWINGS.

1. Furnish pilot light adjacent to toggle switch, where noted as "PL" adjacent to switch identification.

SELECT ONE OF THE FOLLOWING.

2. Color:
   a. Brown.
   b. Ivory.
   c. White.
3. Products: Subject to compliance with requirements, provide products of one of the following:
   Arrow Hart.
   Bryant.
   Eagle (industrial spec grade only).
   Hubbell.
   Leviton.
   Pass and Seymour.

RETAIN OF DELETE BELOW IN CONJUNCTION WITH ELECTRICAL ENGINEER. THIS MASTER SPECIFICATION SECTION HAS BEEN PREPARED ASSUMING THAT BELOW WILL BE RETAINED.

F. Electrical Power Wiring and Accessories: Factory install conduit, wiring, fittings, and connections for electrical receptacles indicated on Drawings and by provisions of this Section. Provide a sufficient number of 20 amp circuits to accommodate the maximum power requirements of Owner's movable equipment within the room indicated in the "Operating Requirements" Article of this Section. Recess conduit and wiring devices within environmental room walls. Provide a junction box to serve each surface-mounted raceway indicated on Drawings.

RETAIN OF DELETE BELOW IN CONJUNCTION WITH ELECTRICAL ENGINEER. THIS MASTER SPECIFICATION SECTION HAS BEEN PREPARED ASSUMING THAT BELOW WILL BE RETAINED.

G. Surface Raceways: Provide 2-7/8-inch wide, 1-7/8-inch deep, single-channel, surface mounted, wire raceways complete with base, cover, and duplex receptacle covers.

1. Products: Provide 0.60-inch thick, 6063-T5 alloy aluminum extrusions with a clear satin anodized finish, and including base, cover, fittings, duplex receptacle cover, and other fittings as required for a complete installation.
   a. ALA 3800 Series; The Wiremold Company.
   b. SWA3200 Series ; Mono-Systems.

RETAIN OF DELETE BELOW IN CONJUNCTION WITH ELECTRICAL ENGINEER. THIS MASTER SPECIFICATION SECTION HAS BEEN PREPARED ASSUMING THAT BELOW WILL BE RETAINED.

H. Power Receptacles: Duplex receptacles shall be rated 125 volt, 20 amp, 2-pole, 3-wire, NEMA Type 5-20R, specification grade, extra-heavy duty, grounding type, with nylon or Lexan bodies and faces of indicated color.

1. Receptacle Spacing: 24-inches on center, unless otherwise indicated.
2. Circuiting: Feed receptacles from 2 dedicated 20 amp circuits, with adjacent receptacles wired to alternate circuits, unless otherwise indicated.
3. Provide GFCI (ground fault circuit interrupter) receptacles within 6 feet of sink units. GFCI receptacles shall be rated for 2000 amps interrupting capacity and trip in 25 milliseconds or less when ground currents exceed 5 milliamps.
4. Receptacle Face Color:

SELECT DESIRED COLOR BELOW.

a. Brown.
b. Ivory.
c. White.

5. Products: Subject to compliance with requirements, provide products of one of the following:
Arrow Hart
Bryant.
Eagle (industrial spec grade only).
Hubbell.
Leviton.
Pass and Seymour.

I. Data Outlets: Where data outlets are indicated on the Drawings furnish and install "standard faceplate bracket" (similar to Panduit #T70DB-X) only. Jacks and final faceplate shall be provided by Owner (ITcom). "Hanging Boxes" are not acceptable.

1. Furnish and install one 1" conduit for data wiring from the surface raceway to a 4"x4" box outside the cold room. Furnish and install nylon pull cord. Box shall be accessible so the Owner (ITcom) so the 1" conduit can be extended to the existing cable tray. All conduits shall have plastic bushings.

PANEL BELOW IS ALWAYS REQUIRED

J. Control Panel: Provide a factory-installed control panel housing temperature and humidity controllers and recorders, as applicable; alarm controls; and other devices requiring periodic adjustment or access by the user. Multiple control panels may be provided where a single control panel is not large enough to accommodate all required devices. Control panel may be standard unit of the Manufacturer of the environmental room, but shall be provided with the following characteristics:

1. Panel Door: Secure, metal-framed unit, with clear, laminated safety-glass window permitting an unobstructed view of all displays, settings, charts, and condition lights when the door is in the closed position.

BELOW IS STANDARD WITH MEDICAL SCHOOL, BUT MAY NOT BE REQUIRED IN ALL CASES. DISCUSS WITH CLIENT.

2. Door Lock: The same keyable, 7-pin tumbler, Best Co. cylinder lock specified for the environmental room door in "Environmental Room Enclosure" Article of this Section.

DISCUSS BELOW WITH ELECTRICAL ENGINEER. THIS APPROACH WILL RESULT IN A CLEAN ELECTRICAL INSTALLATION.

K. Electrical Panel: Provide a factory-installed electrical panel of single power drop design, rated 208/120V, 3-phase, 4-wire. The ampere ratings shall be suitably sized to meet the power requirements of the controlled environment room, but not less than 60A. Panel shall be of "load center" construction with main lugs only (MLO) and shall include all necessary circuit breakers of the appropriate size and pole number. Branch circuit breakers shall feed all loads including, but not necessarily limited to, receptacles, lighting, evaporator unit, compressor unit, and control panels.

1. Locate the electrical panel as indicated on the Drawings, or if not otherwise indicated, next to the control panel. Roof- or remote-mounted panels are not acceptable. The electrical panel may be incorporated into the control panel, as standard with the Manufacturer.
2. Products: Subject to compliance with requirements, provide products of one of the following:
   Cutler-Hammer/Westinghouse.
   General Electric.
   Siemens.
   Square D.

L. Alarm Systems: Provide the following alarm systems:

BELOW IS STANDARD ALARM APPLICABLE TO BOTH WARM AND COLD ROOMS.

1. Temperature Set point Deviation Alarm: Audible and visible warning device mounted on exterior of environmental room indicating temperature rise or fall outside of design parameters.

DELETE BELOW IF NO COMBINATION COLD ROOM/FREEZER ROOMS.

   a. Provide a separate, distinctly marked alarm for the freezer.

BELOW IS ALARM APPLICABLE COLD ROOMS ONLY. SO FAR, IT HAS BEEN REQUESTED BY MED. SCHOOL ONLY. REVIEW WITH CLIENT FOR INCLUSION IN PROJECT.

2. High-Pressure Refrigeration System Failure Alarm: Audible and visible warning device mounted on exterior of environmental room, and actuating upon failure of the high-pressure refrigeration system. System failure is defined as a 25 percent or greater increase in refrigerant pressure beyond normal operating parameters.

BELOW IS ALARM APPLICABLE COLD ROOMS ONLY. REVIEW WITH CLIENT FOR INCLUSION IN PROJECT. BELOW COULD ALSO BE RE-WRITTEN FOR ELECTRICAL RESISTANCE HEAT IN WARM ROOMS.

3. Compressor Power Failure Alarm: Audible and visible warning device mounted on exterior of environmental room, and actuating upon failure of power supply to the compressor.

DELETE BELOW IF NO FREEZER ROOMS.

4. Manually Activated Personnel Alarm: Provide personnel alarm system in freezer, activated by "mushroom" type emergency push button on interior door jamb (latch side of door). Provide separate audible alarm with distinct tone mounted on exterior of environmental room.

DELETE 2 PARAGRAPHS BELOW IF NO ELEVATED CO2 ROOMS.

5. CO2 Set point Deviation Alarm: Provide audible and visible warning device mounted on exterior of environmental room indicating CO2 set point deviation outside of selected parameters.
6. Automatic CO2 Safety Alarm: Provide personnel safety alarm system in environmental room with time-delay feature. Alarm shall be activated by delay switch connected to pre-set timer. Include both audible and visual alarm indications on exterior of environmental room.

THE FOLLOWING IS AN OPTION. DISCUSS WITH THE OWNER BEFORE INCLUDING IN PROJECT.

7. Trouble Alarm Contact: Provide a general trouble alarm SPDT dry relay contact rated 125 VAC, 5 amps minimum, that actuates upon any of the above alarms for use with Owner's remote alarm system.

DELETE BELOW IF NO FURNISHINGS, OR MODIFY TO SUIT PROJECT.

2.7 FURNISHINGS AND EQUIPMENT

A. Wall Mounted Shelving: Provide min. 18 gage, AISI Type 302/304 stainless steel wire shelves mounted on manufacturer's standard-and-bracket system with height adjustable in 1-inch increments. Manufacturer's standard units in configurations indicated on drawings.

1. Size: 14 inches wide by lengths shown on drawings.
2. Load Capacity: Not less than 50 pounds per lineal foot.
3. Product: Super Erecta; Metro.

B. Free-Standing Shelving: Provide free-standing, adjustable-height, wire post-and-shelf system of dimensions and in configuration indicated Drawings. Provide units with components fabricated of AISI Type 302/304 stainless steel. Include necessary fasteners and foot plates for each unit.

1. Shelves: 14 inches wide by lengths shown on Drawings; position adjustable in 1-inch increments.
2. Posts: 74-5/8 inches tall.
3. Product: Super Erecta; Metro.

PART 3 - EXECUTION

3.1 INSTALLATION

A. Field assemble environmental room components following manufacturer's printed instructions.

B. Provide all required cutting and patching of openings required for mechanical and electrical penetrations of room.

C. Field plumb and wire the various system components that cannot be factory plumbed and wired. Comply with referenced building codes and requirements of authorities having jurisdiction.

3.2 FIELD TESTING

A. Perform start-up, functional test, and performance tests not less than 2 weeks prior to conducting training session. Perform tests in the presence, and to the satisfaction, of the Project Representative.

B. Prepare a written report documenting satisfactory completion of start-up activities, and not less than 2 weeks of recorded data indicating compliance with requirements for maintaining temperature range, including tests of temperature recovery time.

3.3 TRAINING

A. Provide not less than 8 hours of training, by a qualified manufacturer's technician, for Owner’s personnel in the proper operation and maintenance of the controlled environmental room. Training shall include a general operation and maintenance course for the end users, and a detailed operation and maintenance course for the Owner’s Plant Department Maintenance and Services group.

END OF SECTION 132100

UNIVERSITY OF MICHIGAN
ARCHITECTURE, ENGINEERING AND CONSTRUCTION

ARCHITECTURE & ENGINEERING
326 East Hoover, Mail Stop B
Ann Arbor, MI 48109-1002
Phone: 734-764-3414
Fax: 734-936-3334

Building Name
-
P00000000 0000

SPECIFICATION DIVISION 14

NUMBER SECTION DESCRIPTION

DIVISION 14 CONVEYING SYSTEMS
SECTION 142123 - ELECTRIC TRACTION ELEVATOR

END OF CONTENTS TABLE

EDITOR NOTE:
THIS ELEVATOR SPECIFICATION IS WRITTEN BASED ON PERMANENT MAGNET AC MACHINE, WHICH REPLACED PREVIOUS GEAR STYLE MACHINES. THIS SPECIFICATION CAN BE USED FOR MRL OR MACHINE ROOM (OVERHEAD OR BASEMENT) TYPE TRACTION ELEVATORS, AND FOR PASSENGER OR SERVICE ELEVATORS. USE REQUIRES CAREFUL EDITTING TO MEET PROJECT REQUIREMENTS.
1-9-15: SUBSTANTIALLY REVISED NEW MASTER SPECIFICATION

DIVISION 14 CONVEYING SYSTEMS
SECTION 142123 - ELECTRIC TRACTION ELEVATOR

PART 1 - GENERAL

1.1 GENERAL CONDITIONS

A. The Contractor under this Division of Work (elevator contractor) is referred to the Contract Forms and General Conditions of these specifications, all of which apply to this Division of the Work.

1.2 SCOPE OF WORK

EDITOR:
EDIT THE FOLLOWING TO SUIT THE PROJECT.

A. The work of this division shall consist of the complete removal and replacement (except items specifically noted to be reused) of --- traction passenger elevator(s) in the ***BUILDING NAME*** building. Bidders shall include all labor, materials, permits, and services required for the complete installation of the elevator and hoistway equipment as herein specified.

1. In all cases where a device or part of the equipment is herein referred to in the singular, it is intended that such reference shall apply to as many of such devices or parts as are required to make a complete installation.
2. Elevator installer to obtain all approvals for any required code variances to accommodate this renovation/installation from Michigan Elevator Safety Division at no additional cost to Owner prior to starting construction.
3. Refer to architectural, mechanical and electrical drawings, and coordinate accordingly

B. Two weeks prior to removal of any equipment, elevator contractor must notify U-M elevator department at 734-647-2059. U-M elevator department will tag any parts to be salvaged. Contractor to remove tagged parts, transport parts to building's loading dock, and notify U-M elevator department which in turn shall remove salvaged parts from site. All other equipment will become property of contractor who will remove from site in accordance with all codes and regulations.

C. Related sections and work of other divisions:

1. The elevator contractor shall include all work and materials, except that listed under "Related work by other contractors", for a complete and operational system.
2. Following is a brief description of work by other divisions included in this contract. This work must be done in accordance with the codes having jurisdiction and the approved drawings of the elevator contractor.
   a. Architectural work: See architectural drawings and specifications.
   b. Mechanical Work: See mechanical drawings and specifications.
   c. Electrical work: See electrical drawings and specifications.

3. Elevator Contractor shall coordinate with all other trades working in hoistway, machine rooms and be available to operate the elevator in a running "Platform" manner to allow other trades to complete there work.
4. All telephone cable and conduit between machine room terminals, controller and car shall be provided by elevator contractor.
5. Final Cleaning: Refer to architectural specifications, division 1, and also refer to Part 3, item 3.8 of this division.

1.3 CODE AND STANDARD OF REGULATORY AGENCIES

A. Applicable elevators codes that are in effect based on the time the permit is drawn shall govern the installation process.

B. Provide a copy of testing documents to the elevator shop at the time of testing.

C. Perform work in accordance with applicable codes, the State of Michigan Elevator Code, the National Electrical Code, and the American Society Mechanical Engineering Safety Code for Elevators, and Escalators ASME A17.1 as adopted by the State of Michigan as referenced therein and all of the provisions in the University of Michigan's Standard General Conditions.

D. Give all necessary notices, obtain State and Municipal permits, pay fees in connection with the installation, including sales and use taxes as applicable, and make tests as are called for by the regulations of such authorities. These test(s) or inspection(s) shall be made in the presence of the authorized representative of such authorities and the owner's representative. It is the responsibility of the elevator contractor to provide any variances from the Governing Authority that could be necessary for a complete acceptable elevator installation. Also refer to Part 3, Item 3.7 of division 14.

E. Elevator Guidelines to Ensure Accessibility by People with Disabilities.

1. Elevators shall meet the guidelines of the Americans with Disabilities Act using the Uniform Federal Accessibility Standards (UFAS) relevant to elevator (section 4.10 Elevators) as the technical requirements.
2. Elevators shall meet the requirements of the State of Michigan Department of Labor Building Code relevant to barrier free design and elevators. Section 512.10.

1.4 SAFETY AND SECURITY REQUIREMENTS:

EDITOR:
TO BE MODIFYING FROM DIVISION 1.

A. The building may be occupied and used by occupants throughout the construction period.

B. Comply with the following safety and security requirements for work conducted in occupied buildings and related areas:

1. Schedule Work with owner through construction Engineer.

2. Building Access: During regular business hours (6:30 AM through 5:30 PM; Monday through Friday, except University-recognized holidays), notify Owner's Representative for access to Project site.

C. Individual areas can be opened as often as once each day by the Owner's building facilities manager. When more frequent daily access is required, or when access is required for more than 5 working days, obtain keys from the University Key Office. When working in more than one area, check with the building facilities manager to ensure no scheduling conflicts exist.

1. Building access outside of regular business hours and on weekends is available only with the written approval of the Owner's Representative. Coordinate access with the Owner's Representative and the Owner's Public Safety Department.
2. Security: Purchase University-provided photographic identity badges for each person engaged in on-site work, and ensure that workers wear badges at all times on University property. Coordinate through Owner's Representative.
   a. Badges are required in occupied buildings when the Contract Time is longer than 1 week.
3. Work activities shall not result in excessive noise, vibration, odors, smoke fumes, etc. in occupied areas. Offending work must be stopped, and rescheduled after off-hours completion: 5:30PM to 6:30AM.

D. Personnel Restriction:

1. Personnel Conduct Restrictions: Employees of the Contractor and subcontractors shall comply with the following restrictions regarding personal conduct while on University of Michigan property.
2. Smoking: Smoking is strictly prohibited except in specially designated areas. In effective of July 1st, 2011 the all campus will be smoke free.
3. Harassment: Conduct considered by the Owner as harassing is strictly prohibited, including the use of profanity; or the use of derogatory or demeaning gender or race-related comments or actions. The Owner reserves the right to require the Contractor, at no additional cost to the Owner, to remove from the Project all personnel who violate this policy.

1.5 GUARANTEE

A. The elevator contractor shall guarantee that the materials and workmanship of the apparatus installed by him meet the specification, and that he will repair any defects not due to ordinary wear and tear or improper use or care, which may develop within warranty from date of final payment or extended new product service period.

1.6 SCHEDULING OF OPERATIONS

A. Contractor must note that the building may be occupied at all times. Construction scheduling is of utmost importance. Refer to bid documents for special conditions and additional information. During the progress of the work, job meetings will be subject to call between the Owner's representatives, and the Contractor's representatives. The Contractor shall provide a representative to attend meetings held from time to time for the purposes of schedule coordination and consideration of technical and construction matters. The Contractor's representative shall be the job superintendent or other person who is authorized to act as the agent of the Contractor.

B. Dates:

EDITOR:
EDIT THE FOLLOWNIG TO SUIT THE PROJECT IF THERE IS MORE THAN ONE ELEVATOR.

1. Start and completion on project, refer to bid documents.
2. Any elevator shall not be out of service continuously for more than 4 months.

C. Sequence of work:

1. Work on one elevator at a time.
2. Therefore one elevator system will always be working while the other one is being worked on.

D. Work restriction shall be verified with building documents.

EDITOR:
EDIT THE FOLLOWING TO SUIT THE PROJECT IF THERE IS MORE THAN ONE CAR.

E. The elevator contractor shall be responsible for all elevator equipment maintenance and repair when the elevator contractor has been on site.

1.7 NEW PRODUCT WARRANTY SERVICES

A. After completion of the installation, warranty and 24-hour callback service for the equipment furnished under this specification shall be provided for a period of twelve (12) months as part of this Contract. This service shall also include regular biweekly examination. Provide minimum of (26) inspections in the one-year period. In the event the 26 site visitation are not completed the elevator contractor will extend his warranty covering all callbacks, repairs, parts, testing, labor and any other item necessary to keep the elevator in like new condition until the twenty-six warranty site visitation have been completed. Advise U-M elevator department each time before and after completion of service (of the installation during regular working hours by trained employees of this Contractor, and shall include all necessary adjustments, greasing, oiling, cleaning, supplies and parts to keep the equipment in proper operation, except parts made necessary by misuse, accidents or neglect caused by others). Contractor shall provide written record of work performed signed by the elevator shop after each visit.

B. All warranty service must be performed by the installers and not by any other services agency. Also, the installer must have an established maintenance and service organization available for performance in the City of Ann Arbor that can provide regular and emergency service, 24 hours a day, every day of the year.

C. It is the responsibility of the U-M elevator department to respond to any emergency regarding elevators. In the event that someone is trapped in an elevator that is under contracted warranty, the University Elevator Department will respond to free the passengers as soon as possible to minimize the inconvenience to users. It is within the right of the University to remove covers, open doors, install monitoring equipment, etc. However, all of this work shall be performed by elevator journey person licensed by the State of Michigan.

D. A detailed record of work performed by University Elevator Mechanics is maintained in the Elevator Shop. Contractors shall contact U-M Elevator Shop for work performed by University Elevator journey person.

E. The elevator contractor shall be responsible to service and maintain all elevator emergency circuits (including the fire service circuit, related equipment and sensors) as part of the regular elevator warranty services contract.

F. The warranty services start after the completion of the 2nd car.

1.8 SUBMITTALS

A. Before beginning fabrication and work, the elevator contractor shall prepare drawings that show the arrangement of the elevator equipment. Approval of drawings and other data (summit minimum of eight sets), which are to be submitted by the elevator contractor to the owner representative, must be approved by U-M engineer/architect. Before proceeding with fabrication and installation of the equipment. Field verify existing conditions and sizes prior to preparation of drawings.

B. Samples:

1. Submit one samples of car wall construction, car floor tile and enamel colors.
2. Do not proceed with the orders until samples are approved by U-M engineer/architect.

C. Shop Drawings:

1. Submit eight (8) copies of Shop Drawings as required showing the general and detailed arrangement of all elevator equipment. Show ceiling, lighting, signal fixtures, and smoke detectors including routing of exposed conduit and all material.
2. Show dimensions, weights, and indicate who will perform the work of each item.
3. Statements to the effects of work by other shall not be accepted; you must identify who is responsible for the work.

D. Product Data: Submit the manufacturer's specification and data sheets, and standard details. Include pictures, catalog cuts, or other suitable illustrations of all elevator equipment that will be exposed in the finish work, including car, hoistway entrance, and signal and control apparatus. Also include these items in bound set.

E. Certificates:

1. Furnish without cost to the Owner all certificates necessary as evidence that the elevator conforms to the applicable laws, ordinances, and requirements.
2. Provide a copy of certificate and State permit to the elevator shop.

F. Operation & Maintenance Manuals:

1. At completion of work provide four complete project and specification sets (bound and properly arranged) of the parts lists and operator's manuals, copies of approved shop drawings, prior to receiving final payment. Following is a brief summary of items:
   a. Legible schematic wiring diagrams including all changes made during installation.
   b. Description of operation of elevator system installed.
   c. Hoisting machine: Including Motor, Brake, Geared Machine and associated devices such as Tach Motors or Monitors.
   d. Deflector Sheaves, Governor and Governor Tail Sheaves, Safeties, Buffers.
   e. Counterweight Assembly, Guide Rollers on Counterweight and Car, Cable Shackles. Safeties and rope brake or other approved emergency stopping device.
   f. Controller and Selector: Including parts information on Relays, Printed Circuit Boards, Reverse Phase Relays, Switches, Lamps, Electrical Cables, Monitors, Modems, Diagnostic Hardware, Diagnostic Software, and Overload Protection Devices.
   g. Door Assemblies: Including Hangers, Rollers, Door Motor, Door Operator, Door Clutch Assembly, Door Closers, Door Drive Arms, Related Hardware, Sheaves, Door Guides, Interlocks, Safety Door Edge.
   h. Signal Equipment: Including Car Station, Hall Stations, Position Indicators, Direction Indicators, Fire Service Panel, Smoke Detectors, Key switches, And Pushbutton Assemblies.
   i. SCR Drive Units, Transformers, Chokes.
   j. Car Top Inspection Station, Limit Switches, Solid State Leveling Control Units, Leveling Switches, Cabs, Door Sling, Platform, and Alarm Bell.
   k. Provide a Laptop computer and demonstrate the elevator system operation to owner personnel as part of training.
2. Maintenance records shall document compliance with ASME A17.1 section 8.6 including maintenance control diagram.
3. Additional O&M manuals will be required per each machine room.

1.9 ACCEPTABLE PRODUCTS

A. Fixtures (Car Operating Panel, Hall Push Button): PTL Performer or Innovation Industries. All shall be Vandal Resistant.

B. Controller: Motion Control Engineering I Format or Model VVV for flux vector and remote diagnostics or Galaxy Controls by GAL, or SmartRise controllers or Virginia control or Elevator Controller Pixel Controllers. All diagnostics shall be compatible with the laptop PC that will be provided and shall be equipped with Campus view.

C. Door Operator & Equipment: GAL Manufacturing Corp. MOVFR Operator, car and hall door tracks, car and door hangers with roller assemblies. Allinterlocks, pickup rollers and operating linkage manufactured by GAL.

D. Hoist Machine: Manufacturer's standard that complies with all duty requirements of this Section and manufactured by Hollister Whitney or Imperial Electric.

E. Variable Speed Drives: With all applicable options, or as approved by controller manufacturer.

F. Door Protective Device: ICU/Gatekeeper 3D from Adams Elevator Equipment Company or Janus 3D.

G. Telephone: RATH Microtech 2100-957-CC telephone integral of cabinet with Rath 2100-Alarm as part of the phone and elevator communications failure. See Item 2.6.D.

H. Roller Guides: Elsco Model "A" on car and Model "B" on counterweights.

I. Car Top Inspection Station: Adams Model A-912CG.

J. Floor Announcement System: Shall be through chime and voice announcements, by Adams or approved elevator controller manufacturer and shall be approved by University of Michigan engineer.

K. Cab Manufacturers:

1. G & R Elevator Mfg.
2. Haunstein Burmeister
3. Tyler
4. Columbia
5. Eklund

PART 2 - PRODUCTS

2.1 SCHEDULE OF NEW EQUIPMENT

EDITOR:
EDIT THE FOLLOWING TO SUIT PROJECT.

A. Elevator Number: Existing State Number ____

B. Type of Service: Passenger/ Freight (Dormitory)

C. Elevator Type: Overhead, traction, geared, machine located on ___floor (Room number _____)

D. Quantity: ----

E. Capacity: ------ pounds

F. Speed: Minimum ----- FPM

G. Travel: ------ + or - (Field verify)

H. Number of Stops: ----

I. Number of Door Openings: -----

J. Floors Served: -,-,-,-

K. Main Floor Egress: _____; Alternate Floor Egress: _____.

L. Hoistway Size: _____long x _____wide (to edge of sill) - Approx. Existing; Field Verify

M. Pit Dimensions: _____long x _____wide x _____deep (Field Verify)

N. Platform Size: _____long x _____wide

O. Car Interior Dimensions: _____long x _____wide x _____ high (dimensions to match existing). Field verify

P. Car Door Size/Operation: _____wide x _____high

Q. Door Opening Type: Single Speed, Center Opening (match landing size)

R. Machine Type/Location: Gearless PMAC/Overhead

COORDINATE POWER SUPPLY WITH THE ELECTRICAL TRADE.

S. Power Supply: --- Volts/ 3 Phase/ 60 Cycle; Motor Horsepower: ---

T. Fire Fighter Service: Yes

U. Independent Service Operation: Yes

V. Load Bypass Operation: Yes

W. Anti-nuisance Feature: Yes

X. Special key Switches: Yes, (two key switches per floor, one for security on & off, one for momentary override).

2.2 GEARELESS HOISTING MACHINE

A. Gearless Machine "PMAC":

1. The machine shall be a Permanent Magnet, Synchronous Design, and AC Gearless Traction Elevator Machine.
2. The traction driving sheave and brake drum shall be mounted to the motor shaft. Motor will be mounted to a structural bed plate of sufficient design for compliance with ASME A17.1.

3. Machine should be totally enclosed, self-cooling without the use of auxiliary fan(s) for cooling.
4. Gearless machine demountable drive sheave shall be cast form the best grade of hard cast iron, semi steel or cast steel of approved composition and shall be machined with grooves, providing maximum traction with a minimum of cable and sheave wear. The surface of sheaves shall be tested individually for hardness and the actual hardness to be plainly stamped next to the grooves on the sheave rim. The hardness must measure between 220 and 240 Brinell.
5. The diameters of the Gearless machine driving sheave shall be not less than forty (40) times the diameter of the hoisting rope.

B. Motor: The motor shall be designed for elevator service. Motor shall be one hour rated, class F insulation. As specified by elevator controller manufacturer.

C. Brake: Provide machine with a spring applied and electrically released electromechanical brake so designed as to be effective to the extent of stopping the car during emergency stop and holding the car under all conditions of loading or operation. Design brake electromagnet for quick release to provide smooth and gradual application of the brake shoes. Brake shall be individually controlled and able to hold 125% of rated capacity. The brake drum must have the wearing surface and edge of flange turned smooth, and the wearing surface must run true within a minimum variation of .005 inch. Brake shoes are to be lined with non-asbestos bonded type linings. Brake plunger rod shall be polished steel with surface free of machine marks. An emergency brake or rope brake shall be provided as per ASME A17.1.

D. Machine Location and Foundation/Bedplate: The elevator machine shall be placed directly over the hoistway upon structural steel beams. The bedplate shall consist of structural steel members fabricated into a rigid unit designed to minimize deflection.

E. Isolation: The machine bedplate shall rest on isolation pads of proper density to effectively isolate the machine from the building structure.

F. All exposed surfaces of machine, motors and governor shall be painted with rust-resisting gloss, gray color enamel after installation.

G. Machine shall not have any name or logo printed or other than University of Michigan made a part of any device supplied under these specifications.

H. Hoisting Machine Acceptable Manufacturers:

1. Hollister Whitney or Imperial Electric.

2.3 PROGRAMMABLE CONTROLLERS FOR AC TRACTION ELEVATORS:

A. Controller Description:

1. The controller shall use a variable voltage variable frequency drive or flux vector for the control of three phase AC induction motors.

2. The drive shall use a three-phase, full-wave bridge rectifier and capacitor bank to provide a bus for the solid-state inverter.
3. The drive shall use power semiconductor devices and pulse width modulation, with a carrier frequency of not less than 2kHz, to synthesize the three-phase, variable voltage variable frequency output to operate the hoist motor in an essentially synchronous mode.
4. The drive shall have the capability of being adjusted or programmed to achieve the required motor voltage, current and frequency, in order to properly match the characteristics of the AC elevator hoist motor.
5. The drive shall not create excessive audible noise in the elevator machine motor.
6. The drive shall limit the total harmonic distortion (THD) reflected back into the power system to the following values at any motor speed from 50 to 100 percent.
   a. Drive input voltage waveform: Less than 3 percent THD.
   b. Drive input current waveform: Less than 100 percent THD.
7. The elevator contractor shall provide at no additional cost any additional devices required to meet the above THD limits.
8. The drive shall be a heavy-duty type, capable of delivering sufficient current required to accelerate the elevator to contract speed with rated load. The drive shall provide speed regulation appropriate to the motor type.
9. 9. The regenerated power from the elevator shall be of benefit to the building. The regenerative power shall not be dissipated in a resistor ban but will be returned to the building electrical system. Steps shall be taken to provide equipment so the regenerated power does not adversely affect other equipment in the facility, steps such as the use of the filter network and or isolation transformer shall be used.
10. A contactor shall be used to disconnect the hoist motor from the output of the drive each time the elevator stops. This contactor shall be monitored and the elevator shall not start again if the contactor has not returned to the de-energized position when the elevator stops.
11. All power feed lines to the brake shall be opened by an electro-mechanical switch. A single ground, short circuit or solid-state control failure shall not prevent the application of the brake.
12. The controller shall provide stepless acceleration and deceleration and provide smooth operation at all speeds.
13. The power control shall be arranged to continuously monitor the performance of the elevator in such a way that if the car speed exceeds 150fpm during access, inspection or leveling, the car shall shut down immediately, requiring a reset operation.

EDITOR NOTE: THE FOLLOWING PARAGRAPH HAS BEEN USED FOR SELECT PROJECTS WHERE PIT HEIGHT WAS LOWER THAN 48". EDIT CAREFULLY OR DELETE.

14. The controller shall be arranged to continuously monitor the performance of the elevator in such a way that the car speed shall not exceed 150fpm during travel down from the -- floor to the Basement floor for elevators ----.

15. The automatic leveling zone shall not extend more than 12" (304.8mm) above or below the landing level nor shall the doors begin to open until the car is level with the landing. In addition, the inner leveling zone shall not extend more than 3" (76.2mm) above or below the landing. The car shall not move if it stops outside the inner leveling zone unless the doors are fully closed and locked.
16. The system shall use an automatic two-way leveling device to control the leveling of the car to within 1/4" (6.35mm) or better above or below the landing sill. Overtravel or undertravel shall be compensated for and the car brought level to the landing sill.
17. The appropriate landing system shall be used with this controller and shall be of steel tape type. Or approved type from controller manufacturer.
18. Automatic Operation of the Car Lighting shall be provided meeting the requirements of ASME A17.1. The Feature shall allow the car lights to be turned off when the following conditions exist for not less than five minutes: the car is at a floor, the doors are closed, there is no demand for service and the car is on automatic operation. Momentary interruption of any of these conditions will cause the car lights to be turned on. The Automatic Operation Feature shall be able to be turned on or off as desired by the owner from the Elevator Controller.

B. Specifics For Closed Loop System:

1. Provide a closed loop tachometer feedback control. The control system shall continuously monitor the elevator speed signal from a velocity transducer and compare it with the intended speed signal to verify proper and safe operation of the elevator and to correct the actual speed to match the intended speed.

EDITOR:
DELETE THE FOLLOWING TO SUIT PROJECT IF THE SPEED 150FPM OR ABOVE.

C. Specifics For VVVF Drives (For speeds of 150fpm or below):

1. NOTE: For VVVF applications, the AC motor shall have slip specifications between 8 percent and 12 percent, or a NEMA rating of "D".
2. The VVVF drive shall be capable of providing a braking pulse to use in the stopping sequence of the elevator. The braking pulse shall take the form of an adjustable DC current pulse applied to the AC motor for an adjustable period of time (0 to .75 second).
3. The VVVF drive shall be able to be programmed with different volts per hertz patterns, which shall be used to adjust the drive control characteristics.

EDITOR:
DELETE THE FOLLOWING TO SUIT PROJECT IF THE SPEED 150FPM OR BELOW

D. Specifics For Flux Vector Drive (For speeds over 150fpm) NOTE: For flux vector applications, the AC motor shall have slip specifications of 5 percent or less, or a NEMA rating of "A" or "B".

1. The flux vector drive shall be capable of producing full torque at zero speed.
2. The flux vector drive shall not require DC injection braking in order to control the stopping of the car.
3. The flux vector drive shall utilize encoder feedback to regulate hoist motor speed. The encoder shall be mounted to the motor shaft.

E. The controller shall be UL, ETL or CSA listed, and shall meet FCC part 15 subpart J limits for radio frequency interference.

F. Provide fluorescent lighting at the front and back inside the controller cabinet. Ventilation fans shall be part of the controller cabinet.

G. Controller: Motion Control Engineering I Format or Model VVV for flux vector and remote diagnostics or Galaxy Controls by GAL, or SmartRise controllers or Virginia control or Elevator Controller Pixel Controllers. All diagnostics shall be compatible with the laptop PC that will be provided and shall be equipped with Campus view.

H. Drives: Provide as recommended and approved by controller manufacture.

I. Elevator controller is to be factory equipped with provisions for emergency power connections and be able to prevent regenerative power back into line.

J. Phase protection: Provide 3-phase power monitor for elevator power which monitors phase loss, low and high voltage, phase reversal, phase unbalance, and has both manual and automatic reset. Leave in manual position.

EDITOR: DELETE THE FOLLOWING IF YOU DO NOT HAVE EMERGENCY POWER.

K. Emergency Power: When emergency power is detected, cars shall sequentially return to the main lobby one elevator at a time, and remain there with doors open. While each car is being returned, all other cars shall be shut down so as not to overload the emergency power generator. Once all cars have been returned to the lobby, one car may be selected to run under emergency power. Selection of the car that runs under emergency power shall be done automatically by the group system. This automatic selection may be overridden through manual selection. Refer to Mechanical drawings and detail sheets M --.

L. Elevator contractor shall obtain necessary variances to address the reaction toe guard and provide safety switches in the safety loop that will prevent the elevator from running should the toe guard not extend or retract as applicable when leaving or approaching the lowest landing, if contractor has the ability to provide another guaranteed method to address safety concerns with a shorter toe guard and will approved by the State of Michigan Elevator Safety Division then the university will consider this option

M. Auxiliary Operations:

EDITOR:
FILL OUT THE EGRESS FLOOR AND THE ALTERNATE FLOOR.

1. Firefighter's Service:
   a. The following operation is for the use of firemen and other authorized personnel per ASME A17.1.
   b. Automatic passenger elevators shall conform to the following:
      1) Provide a three position (on, off, and re-set) key-operated switch at the main floor for each single elevator or each group of elevators. The key shall be removable only in the "on" and "off" positions. When the switch is in the "on" position, the elevators controlled by this switch and which are on automatic service shall return non-stop to the main floor, and the doors shall open and remain open.
      2) An elevator traveling away from the main floor shall reverse at the next available floor without opening its doors.
      3) Elevators equipped with automatic power-operated doors and standing at a floor other than the main floor, with doors open, shall close the doors without delay and proceed to the main floor.
      4) Door reopening devices for power-operated doors, which are sensitive to smoke, heat or flame shall be rendered inoperative.
      5) All car and corridor call buttons shall be rendered inoperative and all call register lights and direction lanterns shall be extinguished and remain inoperative.
      6) The University Elevator Shop will supply to the installing contractor a "Security Box" (key box) for installation at the egress floor.
      7) A car stopped at a landing shall have its "Emergency Stop Switch" rendered inoperative as soon as the doors are closed and it starts toward the main floor. A moving car, traveling to or away from the main floor, shall have its "Emergency Stop Switch" rendered inoperative immediately.
      8) A sensor in each elevator lobby, which when activated prevents cars from stopping at that floor, shall not be substituted for the above requirements.
   c. Sensing Devices: In addition to the key-operated switch required in "b" above, heat and smoke or products of combustion sensing devices shall be furnished and installed by fire alarm contractor in each elevator lobby at each floor, and the main floor (Note - Egress floor is --- floor) alternate floor for the elevator is --- floor. The activation of a sensing device in any elevator lobby shall cause all cars in all groups that serve that lobby to return non-stop to the main floor. The key operated switch when moved to the "Re-set" position, shall restore normal service independent of the sensing devices. Sensors at each floor shall be connected separately from sensors at main floor. Smoke detectors shall be photoelectric type, supplied by fire alarm contractor. Submit drawings showing locations of smoke heads and exposed conduit for owner's approval prior to installation.

d. Provide a three position (off-hold-on) key-operated switch in each car fire service compartment per ASME A17.1 and shall be effective only when the main floor key-operated switch is in the "on" position or a sensor has been activated and the car has returned to the egress floor or other approved level. The key shall be removable in all positions, and shall not change the operation until the car is at a floor with doors fully opened.

e. The operation of elevators on Fire service shall be as follows:
   1) An elevator shall be operable only by a person in the car.
   2) Elevators shall not respond to elevator corridor calls.
   3) The opening of power-operated doors shall be controlled only by continuous pressure "open" buttons or switches. If the switch or button is released prior to the doors reaching the fully open position, the doors shall automatically re-close. Open doors shall be closed by continuous pressure on "Door Close" switch or button.
   4) Means shall be provided to cancel registered car calls.
   5) When the switch is in the 'hold' position, the car shall remain at the floor with its doors open.
   6) Elevators can be removed from individual car fire service by moving the key-operated switch to the "off" position and the car is at the main floor or other approved level.

f. The switches required above shall be operated by the same key but are not a part of a building master key system. There shall be a key for the main floor switch and for each elevator in the group and these keys shall be kept on the premises by persons responsible for maintenance and operation of the elevators, in a location readily accessible to authorized persons, but not where they are available to the public. TURN OVER ALL KEYS TO PROJECT ENGINEER.

g. Instructions of operation shall be provided as required by code.

2. Elevators arranged for dual operation shall:
   a. Conform to the automatic operation described above when on automatic operation.
   b. When firefighter's emergency operation is activated and the elevator is on independent or inspection operation the elevator shall be provided with a signal system consisting of both visual and audible types to alert the attendant to close the door and return non-stop to the main floor or other approved level. Provisions shall be made to alert the attendant in the same manner when a heat and smoke or products of combustion sensing device is activated.
      1) Floor Fire Service:
      2) Alternate Floor Fire Service:
      3) The activation of a sensing device at the lobby (item 2. above) shall cause all elevators to return non-stop to the alternate floor and the doors shall open and remain open. (The alternate fire service floor shall be defined as any building floor other than the main fire service floor) which will be ---- floor.

4) Operation of the elevators shall conform to "Firefighters Service". When sensing devices are activated, the elevators shall return non-stop to the designated main floor and the doors shall open and remain open. When building sensors activate at the main fire service floor, elevators shall automatically be dispatched to that building's --- floor, which has been designated "alternate" fire service floor where the elevator doors shall open and remain open.

N. Independent Service Operation:

1. Independent service operation shall permit one or more elevators to be removed from the group control and used without interfering with the normal operation of the remainder of the group.
2. Provide a two-position switch in the car-operating panel for each elevator.
3. When the switch is placed in the independent service position, the mode of operation shall be amended as follows:
   a. The car is disconnected from the group supervisory system.
   b. Existing car calls shall be canceled.
   c. The cars shall bypass landing calls.
   d. Continuous pressure on the car button of the selected floor shall close the doors and start the car toward the selected floor. Pressure shall be required on the button until the car starts. Releasing the car button before the car starts shall cause the doors to automatically reopen.
   e. After the car has arrived at the floor and the doors have automatically opened, the cars shall remain at the floor until another car button is pressed or until the key switch is returned to the normal position.
   f. Should all cars be put on independent service, all hall calls registered shall be canceled. Further registration of hall calls shall be inhibited.

O. Load Bypass Operation:

1. Shall automatically delete hallway call buttons when car is loaded to its limit. Load bypass operation shall be adjustable from the controller to adjust the load at which to bypass hall calls not delete them.

EDITOR:

DELETE THE FOLLOWING IF YOU DO NOT HAVE EMERGENCY POWER.

P. Emergency Power Panel For Fire Service:

1. Emergency switch and annunciation panel shall be a 24"x24" brushed stainless steel, with lockable cover, fully recessed panel to be located on the egress floor where indicated on drawings. The panel shall have indicating red lights showing locations of cars during emergency power condition.
2. A key switch shall have auto, manual, 1, 2 & -***NO. OF ELEVATORS***.
3. The panel shall be labeled as "Elevator Emergency Panel".
4. See details on sheet ---.

Q. Anti-Nuisance Feature:

1. Provide an anti-nuisance operation to prevent the elevator control system from responding to a faster than normal rate or registration of car calls. The "normal" rate of registration of car calls shall be programmable on an individual elevator basis within the group.
2. If the anti-nuisance monitor determines that the rate of registration of car calls is excessive as compared to the pre-programmed rate of car calls, all car calls shall be canceled and shall be required to be reregistered.

R. Automatic Two-Way Car Leveling:

1. Each elevator car shall have two-way leveling to automatically bring the car to a stop approximately level with any floor for which a stop has been initiated, regardless of load, rope stretch, or direction of travel.
2. Automatic leveling control shall permit the synchronization of door opening with the stopping of the car at a floor.

S. Machine Finish and Painting: All exposed surface of machines, motors and controllers shall be repainted after field installation and before acceptance by owner with rust resisting gloss enamel light gray paint.

T. Computer For Elevator Controller Diagnostics:

1. Provide a Dell Laptop, Model "Dell Latitude E6420" with Intel vPro Advanced Systems Management loaded with Diagnostics software for the installed elevator controller.
2. Laptop Requirements:
1. Provide a Dell Laptop, Model "Dell Latitude E6420" with Intel vPro Advanced Systems Management loaded with Diagnostics software for the installed elevator controller.
2. Liftnet monitoring system shall be installed and operational by elevator contractor.
3. Laptop Requirements:
   a. Dell Latitude E6420
   b. Operating system Genuine Windows 7 professional, no media, 32-bit, English.
   c. Primary Storage: 250GB 5400rpm Hard Drive
   d. Processer Branding: Intel Core i5 vPro Label.
   e. Processor: Intel Core i5-2520M (2.50GHz, 3M cache) with turbo Boost Technology 2.0.
   f. LCDs: 14.0" HD Anti-Glare LED backlit.
   g. Memory: 4.0GB, DDR3-1333MHz SDRAM, 2, DIMMS
   h. Internal Keyboard: Inertial English keyboard Dual Pointing Keyboard
   i. Primary Optical Device: 8X DVD+/-RW w/Roxio and Cyberlink Power DVD, no media.
   j. Wireless LAN: Intel® Centrino® Advanced-N 6205 802.11a/b/g/n Half Mini Card
   k. Energy Star & EPEAT: Energy star 5.0 Enabled / EPEAT Gold
   l. USB Optical Mouse
   m. Primary Battery: 6-cell (60WH) Primary Lithium Ion Battery
   n. AC Adapter: 90W /C ADAPTER (3-PIN)
   o. carrying case: Slim Nylon Case (2 Pocket)
   p. Support Services: 4 Year Basic Hardware Service with 4 Year NBD Limited Onsite Service After Remote Diagnosis
   q. 4 year complete care accidental damage protection.
4. Laptop shall be compatible with all new elevator controllers.

EDITOR: DELETE THE FOLLOWING IF LCD SCREEN IS NOT REQUIRED ON CAR OPERATING PANEL.

U. Elite Computer Specs:

1. The display shall utilize a (SIZE). Active matrix TFT screen and be powered by a computer with enough memory to support customer specific text and graphics. The display must interface with the elevator controls to support position, direction and status of the car and or bank. In addition the display must be able to support customer programmable scheduled messages in text or graphic format. The system must have software that allows the customer to change the design and transfer to each display individually.
2. Specification for a computer when interfacing to C.E. Electronics, Inc. ELITE DISPLAY:
   a. Windows XP or better.
   b. Pentium/Celeron 2 GHZ or better.
   c. 512 MB of ram
   d. 100 MB free drive space
   e. Network connection
   f. USB ports-2
   g. CD drive
   h. Keyboard & Mouse
3. Monitor:
   a. 800x600 resolution or better.
   b. 16 bit color or better.
   c. 15 inch or larger
4. Specs on the Elite's:
   a. Processor: Intel Celeron M processor 800 MHz.
   b. Ram: 256 MB Ram DDR-SO-DIMM.
   c. Chipset: Intel 82852GM, 400MHz FSB, integrated graphics
   d. Video Controller: Intel Extreme Graphics2 controller,
   e. Storage: 40 GB notebooks hard drive.
   f. OS: XP Embedded services pack 2.

V. Acceptable manufacturer:

1. Motion Controller Engineering (MCE) I Controller or Virginia Controls or Galaxy Controls by GAL or SmartRise controllers or Virginia control or Pixel Controllers.

2.4 HOISTWAY EQUIPMENT & HOISTWAY ENTRANCES

A. Provisions for Hoistway Access:

1. Elevator door safety plug-lock- Keyway - Furnish and install hoistway door unlocking devices at all landings with Tri-lock MFG. & MAINT. CORP. key NO. 6950 in accordance with requirements of the latest Edition of the American Standard Safety Code for Elevators, Dumbwaiters, and Escalators, and as permitted by the Local Code.
2. The hoistway door-unlocking device shall unlock and permit the opening of the hoistway door from any floor irrespective of the position of the car. The design of the device shall be such as to prevent unlocking the door with common tools. The means for unlocking the door shall be available and used only by inspectors, maintenance, and repair personnel.
3. Access Switches - Furnish and install hoistway access switches and associated devices (at the top and bottom landings in accordance with requirements of the latest Edition of the American Standard Safety Code for Elevators, and Escalators, and as permitted by the Local Code.

B. Top of Car Operating Device:

1. An operating device shall be provided on the top of the car located in the front between the car crosshead and hoistway door, complete with an Emergency Stop Switch, GFCI plug, fire service lamp and buzzer, lamp and guard, a Selections Switch, UP, DOWN and safety operating Buttons. This device shall comply with ASME A17.1 and local codes. Using Adams model A-912CG with Light guard.
2. Operation from the top of the car shall not be permissible unless all electric door contacts are closed.
3. Elevator(s) shall be provided with at least two electric light fixtures and a convenience outlet fixture on the car top. The two light fixtures combined shall provide an illumination level of not less than 10fc measured at the point of any elevator part or equipment, where maintenance or inspection is to be performed from the car top. The light fixtures shall be permanent and be of the fixed or portable type and shall be equipped with guards. The light switch shall be accessible from the landing when accessing the car top.

C. Pit Stop Switch:

1. A switch or switches shall be located in each elevator pit, in accordance with ASME A17.1 and local codes, which when turned to the "OFF" position will cause the electric power to be removed from the elevator motor and brake. This switch shall be lockable in the "OFF" position.

D. Emergency Alarm Bell:

1. Provide an alarm bell with it's own battery source and recharging unit for emergency power unit, mounted on the car. When the emergency alarm bell button in the car is pressed, it shall illuminate and the alarm bell shall sound. Operation shall be in accordance with ASME A17.1 and the State of Michigan Elevator Code.
2. DBA level of the alarm bell (80-85 DBA).

E. Hoisting And Governor Ropes:

1. Provide hoisting suspension means & ropes, specifically designed for elevator service, of sizes and numbers sufficient to comply with the requirements of the Code. The number and sizes of ropes proposed to be used shall be indicated on the shop drawings.
2. Governor ropes shall comply with the requirements of the Code, shall be at least 3/8 inch in diameter, and specifically designed for elevator service.
3. Use only wedge type sockets to fasten the ropes.

F. Counterweights:

1. Elevator shall be suitably counter-balanced for smooth and economical operation by adjusting the quantity of weights. Weights shall be contained in a structural steel frame properly guided with suitable roller guides. The counterweights shall be equal to the weight of the complete elevator car and approximately 40% of the rated load.
2. The counterweight frame shall be equipped with roller guides. Each roller guide shall consist of three wheels, each a minimum of 6" inches in diameter, tired with a durable resilient material. The guides shall be designed as to maintain continuous contact with the guide rails.

3. Manufacturer of roller guide: Elsco model B.
4. If contractor desires to reuse existing counterweights and frame, he/she shall submit a certified letter by a professional structural engineer that they will meet the loads and reactions of the new elevator system and without any defect.

G. Guide Rails:

EDITOR:
REUSE ON REPLACEMENT PROJECTS WHERE POSSIBLE FOR CAR AND COUNTERWEIGHT.

1. Provide steel tee guide rails to meet ASME A17.1 requirements, including suitable brackets and clamps for attachment to the building structure. The guide rails and car frame shall be located such that the car is in balance with guides. The machined tongue and groove joints shall be fitted with machined fishplates fastened to each rail with at least 4 through bolts.
2. All joints shall be located free of interference with supporting clamps and brackets. Shims used to obtain rail alignment shall be designed to remain in position, even through the fastening bolts may be loosened.
3. The guide rails shall be installed and aligned with their machined faces plumb within one-eight of an inch from the top to the bottom of the hoistway.
4. Minimum Rail size shall be 15 pounds per foot for both car and counterweight guides. Upgrade rails based on application.

EDITOR:
DELETE THE NEW GUIDE RAIL IF THE GUIDE RAILS ARE TO BE REUSED FOR CAR AND COUNTERWEIGHT.

5. The car and counterweight guide rails shall be realigned, refinished and cleaned so that the faces of the rails are plumb within one-sixteenth (1/16) of an inch in 100 feet of travel. Refinish rails for smooth operation and paint back plains with black paint.

H. Buffers:

EDITOR:
DELETE IF THE ELEVATOR SPEED IS LESS THAN 200FPM.

1. Provide oil type buffer for speed over 200 fpm, buffers shall be in accordance with ASME A17.1 code. The buffers shall be fastened to steel channels provided and installed by the elevator contractor.

EDITOR:
DELETE IF THE ELEVATOR SPPEED IS OVER 200 FPM.

2. Provide spring type buffer for under 200 fpm, buffers shall be in accordance with ASME A17.1 code. The buffers shall be fastened to steel channels provided and installed by the elevator contractor

I. Normal Stopping Devices:

1. Slow-down and normal stopping devices shall be furnished and installed for each car. These devices shall be so arranged that, as the car approaches either terminal landing, a series of activation devices mounted in the hoistway shall activate bi-stable magnetic reed switches mounted on the car and automatically bring the elevator to a smooth stop at the terminal floor.

J. Final Limit Switches:

1. In addition to the normal limit stops, a hoistway final limit switch shall be installed at the top and at the bottom of each hoistway. These final limit switches shall be operated by a fixed cam securely attached to the car. The switches shall be so located that they are operated should the car travel a predetermined distance above or below the upper or lower terminal floor. These limit switches shall be independent of any other stopping devices, shall be positively opened without the use of springs and shall cut off all power from the motors and brakes and prevent the operation of the car in either direction.
2. Final limit switches shall be so located that they open at or about the time the buffer is engaged by the car or counterweight.

K. Deflector Sheaves:

1. Deflector sheave: Provide new deflector sheaves to properly lead the hoisting ropes from the machine to the car and/or counterweight. Sheaves shall be cast iron, accurately machined and grooved for the diameter of ropes used and supported by steel beams furnished in place by the elevator contractor. The bearings shall be permanently lubricated type commonly referred to as (sealed) bearings (non-grease-able type).
2. Existing steel channels at top of hoistway may be reused if engineering data supplied by Elevator Contractor supports their reuse. Guards and beams if reused shall be stripped and repaint.
3. Deflector sheave guard: When deflector sheave extends below the bottom of machine beams, a substantial metal guard shall be provided below the sheave and attached to the sheave supports.

L. Landing System:

1. This landing system shall provide high speed stepping signals, one-floor-run stepping signals, leveling, and door zone signals. Each output signal shall be electrically isolated and shall be capable of reliably operating at 120 VAC.
2. Landing system shall be provided by the elevator controller manufacturer.
3. The system shall consist of a steel tape with mounting hardware to accommodate the complete travel of the elevator, a car top assembly with tape guides and sensors, and magnetic strips for stepping and leveling.
4. The leveling and stopping accuracy of the system shall be within 1/4 inch of the floor level and shall correct for over travel or under travel to within the same accuracy, regardless of load variations or direction of travel.

M. Hoistway Doors:

EDITOR:
FOR NEW HOISTWAY DOOR SERVICES

1. New doors shall be flush hollow metal panels fabricated of No. 16 U.S. gauge steel, minimum. The doors shall be 1-1/4" thick and reinforced with continuous members. Panels shall have sound deadening insulation. Doors shall have removable non-metallic gibs to run in the sill guideway with minimum clearance. Door panels shall conform to the National Elevator Code ASME A17.1 and the Underwriter's Laboratories 1-1/2 hour fire test requirement. Door unlocking devices shall be provided at all floors and as required by local codes. Sight guards shall be provided for all entrances. Provide new hoistway doors at all landings. The doors shall be equipped with nylube door guides.
2. Hoistway landing interior finish shall be painted black.
3. Hoistway landing Doors exterior finish shall be stainless steel.
4. Hoistway door unlocking devices at all landing shall be provided with TRI-Lock removable plugs with key number 6950

EDITOR:
TO BE USED WHEN BI-PARTING FREIGHT DOORS ARE REQUIRED. THIS SECTION IS INFREQUENTLY USED. EDIT CAREFULLY.

N. Hoistway Doors (Freight):

1. The doors shall bear a 1 1/2 hr. UL Label.
2. Doors shall meet ASME A17.1 code requirements.
3. Doors shall be solid panels with resilient edges.
4. Doors construction to be "316" stainless steel.
5. Doors operation shall be power type. Each door shall be electrically operated with two motorized 2-speed door operators mounted on either side of the assembly. An automatic stay-open, feature shall assure that the door stays fully open. All operating mechanisms shall be entirely within the elevator shaft. The controls shall permit immediate emergency manual operation.
6. Rails for the doors shall be steel construction and have adjustable trucking sill stops.
7. Door sections shall be connected to each other with suitable roller chain running over grooved ball bearing sheaves.
8. Door shall be interlocked with the elevator controls to prevent normal operation of the elevator unless all doors are closed and locked, and to prevent door opening when elevator is in motion.
9. Door electrical characteristic is 208v, 3phase, 60cycle, with 30AMP. Circuit
10. Manufacturer: Peelle F10S. Refer to detail on drawings sheet M--.
11. Observation window is to be provided per ASME-A17.1.
12. Door shall be with automatic closing feature, with horn while it is closing. Operation shall be of the sequenced type.

O. Entrances:

1. New entrances shall consist of flush hollow metal door panels, bolted unit type frames, sill's integral hanger(s), hanger covers, fascia plates, headers, struts, sight guards and hardware.

P. Frames:

EDITOR:
FOR NEW FRAMES

1. New unit frame shall be fabricated of No. 14 U.S. gage steel comprising the head and side jamb sections, which shall be securely bolted to from one piece unit construction and shall be securely fastened to the sill and hanger support. They shall be returned on the hoistway side to present a neat appearance.

EDITOR:
FOR REUSE PROJECTS

2. To be reused, sand, fill-in dents and paint matching existing color. Enamel paint to be used. Provide prime coat prior the finish coat for each floor.

Q. Sills:

EDITOR:
FOR NEW SILLS

1. Sills shall be of extruded aluminum construction with a non-slip wearing surface. They shall be supported on steel brackets and securely fastened to the floor. Grooves for the door guides shall have minimum clearance for the guides. The sills must be suitable for "class C3" loading.

EDITOR:
FOR REUSE SILLS

2. To be reused, clean and polish each sill.

R. Struts:

EDITOR:
FOR NEW STRUTS

1. A 3"x3"x ¼" steel angle struts shall extend from the sill to the building beam above and shall be securely fastened to ensure rigidity and adequate support for the header.

EDITOR:
FOR REUSE STRUTS

2. To be reused sand, prime and paint black.

S. Headers:

EDITOR:
FOR NEW HEADERS

1. Header shall be constructed of 3/16" formed steel to provide support for the frame and hangers.

EDITOR:
FOR REUSE HEADERS

2. To be reused sand, prime and paint black.

T. Fascia, covers, and Toe guards:

EDITOR:
FOR NEW FACIA COVERS AND TOE GUARDS

1. Fascia, including hanger covers, toe guards and dust covers shall be fabricated of No. 16 U.S. gauge steel. Fascia shall span the width of the opening plus 6 inches. Dust cover extends a minimum of 8 inches above the header and the toe guard shall extend a minimum 8' below the sill. Both shall return to the wall at 60 deg. Angle.
2. Finish:
   a. Struts, headers, hanger cover, fascia, dust covers, and toe guards shall have matte black finish. New entrance frames (existing) shall be finished in stainless steel of color selected by owner. All landing doors shall be new and finished in enamel of color selected by owner.
   b. All existing heads and jambs shall be stripped to bare metal, prepared with primer and finished with two coats of enamel paint.

EDITOR:
FOR REUSE FACIA COVERS AND TOE GUARDS

3. To be reused sand, prime and paint black or provide new.
4. finish:
   a. All existing headers and jambs shall be stripped to bare metal, prepared with primer and finished with two coats of enamel paint.

2.5 CAR EQUIPMENT & CAR ENCLOSURES:

A. Power door operation:

1. The car and hoistway doors shall be operated quietly and smoothly by an electric operator, which shall open and close the car door and respective hoistway door simultaneously. The doors shall open automatically when the car is leveling at the respective floor and, when operating without an attendant, shall close after a predetermined time has elapsed. Momentary pressure on the "Open Door" button in the car shall cause the doors to remain open or, if closing, to reopen and reset the time interval.
2. The doors shall be opened at rated speed and the closing speed shall be per Code. Door closing force shall be as allowed by code.
3. An electric contact for the car doors shall be provided which shall prevent elevator movement away from the floor unless the door is in the closed position as defined by code.
4. Each hoistway door shall be equipped with an auxiliary door closing device and a positive electro-mechanical interlock to prevent the operation of the elevator until the interlock circuit is established and the doors are locked and closed.
5. Car doors shall be provided with zone looking.
6. Manufacturer: GAL, MOVFR operator.

B. Landing Door Hangers:

1. Each hoistway door shall be suspended by two (2) sheave type hangers. Each hanger shall consist of a polyurethane tread on a metal hub equipped with precision ball bearings mounted onto a steel bracket. The hanger sheaves shall not be less than 3-1/4 inches in diameter. The track shall be so shaped as to permit free movement of sheaves without regard to vertical adjustment of the sheave brackets. An up-thrust roller shall be provided beneath the track and each sheave wheel, capable of withstanding a vertical thrust equal to the carrying capacity of the upper sheave. The up-thrust roller shall be adjustable for fine vertical adjustment and the face of the roller shall be so shaped as to conform to the bottom face of the hanger track. Doors closers shall be sill mounted.
2. Manufacturer: GAL MOVFR operator.

C. Door protection and reopening device:

1. Acceptable products are limited to: ICU/Gatekeeper 2000 from Adams or Janus 3D.

D. Adaptive door timing:

1. Door open times will be varied subject to the call situation causing the stop:
   a. Shortest timing, when car call only causes stop.
   b. Longer timing, when hall call only causes stop.
   c. Longest timing, when coincident hall and car calls exist.
   d. All timing shall meet ADA guidelines as a minimum.
2. The door opening time, measured from the instant the doors start to open until within 1" of fully open position, shall not exceed code standard.
3. Long door and short door "hold open" times shall be set at 4.0 and 2.5 second respectively and shall be ADA complaint.

E. Car sling, safeties and governors:

1. Provide new car sling and safeties.
2. The new safety, of type required by Code, shall be mounted on the bottom members of the car frame and shall be operated by a speed governor located over the hoistway. The safety shall be arranged to stop the car whenever excessive descending speed is attained and means shall be provided to cut off power from the motor and apply the brake prior to application of the safety.
3. Acceptable Manufacturer: Hollister-Whitney or Titan.

F. Car platforms and flooring:

1. Each passenger type car platform shall consist of a structural steel frame with a wood and metal composite floor (i.e. one layer of 3/4" marine grade plywood plus 14 gauge steel plate plus 3/4" thick marine grade plywood plus finish flooring). Top finish flooring on cars shall be furnished and installed by elevator contractor and shall be as described in Item 2.5.J.
2. Each passenger type platform shall be equipped with an extruded aluminum threshold and a steel toe guard at the loading edge. The under side of the platform shall be fireproofed to comply with local codes.
3. The car platform shall be capable for handling the capacity of the car being loaded in one-piece across the entrance of the car and landing.

G. Platform isolation:

1. Each passenger type platform shall be mounted on rubber pads supported on an auxiliary steel frame fastened to the car frame. This arrangement shall form an isolating cushion between the car and the steel car frame.

H. Car and counterweight roller guides:

1. The car and counterweight system shall be provided with roller guides. The guides shall be designed so as to maintain continuous contact with the guide rails.
2. The elevator frame shall be provided with roller guides. Each roller guide wheel shall be 6" in diameter, tired with a durable resilient material. The guides shall be designed so as to maintain continuous contact with the guide rails.
3. Acceptable Manufacturer: Elsco model "A" for car and model "B" for counterweight.

I. car doors:

1. Provide car Doors flush hollow stainless steel panels. Panels shall have sound deadening insulation. Doors shall have removable non-metallic gibs to run in the sill guideway with minimum clearance. Door panels shall conform to the National Elevator Code ASME A17.1 and the Underwriter's Laboratories 1-1/2 hour fire test requirement. Door unlocking devices shall be provided as required by local codes. The doors shall be equipped with nylube door guides.
2. Car door hangers and tracks shall be provided similar to hoistway doors.
3. Doors finish shall be #4, brushed stainless steel.

J. Car Enclosures:

1. All cab material; design, lighting, ventilation and exits shall comply with "American National Standard Safety Code for Elevators, ASME A17.1 and/or local codes. Where codes conflict the more stringent shall apply.
2. Wall panels and reveals shall be of rigidized 316 stainless steel constructions and applied to a steel shell.
3. Returns shall be of stainless steel construction and have a #4 brushed finish. Cutouts shall be provided for operating elements and fixtures. Minimize thickness of return to maximize clear floor area.
4. Canopy shall be constructed from formed and reinforced 16 gauge steel finished in white enamel and shall have an overall height of 8'0" from the finished floor. An emergency exit shall be provided which is locked from the top of the car.
5. Provide LED lighting in 45 degree beveled coves at ceiling and wall corner that will apply 10 foot-candles in the cab at floor level. Total of six or eight lights, four on each side. Coves shall be made of stainless steel with #4 finish and located at ceiling level of cab. Also comply with UFAS lighting level requirements.
   a. LED Model SB-1 Manufacturer by Man-D-Tec.
6. Entrance columns shall be #4 brushed stainless steel finish. Columns shall run from floor to canopy, be finished in a vertical grain, and shall be integral to the returns.
7. Entrance transom shall be #4 brushed stainless steel finish. Columns shall run from floor to canopy. Transom shall run the full width of the car and be finished in a horizontal grain.

8. A single speed fan shall be provided that matches the ceiling and is mounted to the canopy. Air intake to the fan shall be through the 3/8" diameter holes (adequate in number to allow free passage of required air quantity) drilled in canopy. Submit shop drawing of canopy for approval prior to fabrication. CFM as required per ASME A17.1. Sound power is to be 45 DBA max.
9. A 3/8" x 2" bar handrail with radiuses ends of #4 brushed stainless steel finish shall be provided to meet code requirements, on side and back walls but shall not interfere with car operating panel.
10. Car sills shall be extruded aluminum. Car sills for elevator in parking structures shall be nickel silver.
11. Finished floor covering shall be furnished and installed by the elevator contractor.
    a. Flooring shall be "Endura" style rubber tile by Burke Flooring. Texture and color to be selected by owner.
12. Provide removable protective wall pads with padlocks inside elevator car to protect the wall panels. Pads shall meet all codes for elevator car enclosures, and be equal to Palmer "PalmTuff Vinyl Pads". Color to be selected by owner from mfg standards.
13. Acceptable Cab Manufacturers:
    a. G&R Elevator Co.
    b. Haunstein Burmeister
    c. Tyler
    d. Columbia
    e. Eklund

2.6 OPERATING FIXTURES

A. Car operating panel:

1. The operating panel in the car shall consist of vandal resistant stainless steel control panel. (Taper all projected sides of car panel back to return panel for a neat appearance. Submit drawings for approval prior to fabrication.) The main control panel shall contain a series of push buttons with illuminated call registration devices, numbered to correspond to the various landings serviced. In Car Stop Switch, Fire Service Compartment, Alarm Button (connected to a bell located on the car) and a Door Close, Door Open button for each entrance. Alarm bell shall be operated from its own independent battery pack power supply and recharging system. The control panel shall also contain separate key operated switches for Access, independent service, car lights, car fan, emergency light and test switch. Emergency phone shall be hands free type. Panel shall also accommodate certificate frame, hands free phone and digital car position indicator. All key switch cylinders shall be standard Adams fixtures.
2. Buttons shall be made of brushed stainless steel with LED for illumination, with translucent floor designations, with Braille.
3. Provide emergency light in car-operating panel with rechargeable nickel cadmium batteries and recharging system.
4. Provide engraved fire services instruction per ASME A17.1.
5. Acceptable Manufacturers: PTL-Performer series or Innovation Industries. All shall be vandal resistant and brailled.
6. Refer to detail on drawings.

B. Hall push button:

1. ADA compliant vandal resistant illuminating LED type Hall push buttons shall be installed at each floor to permit waiting passengers to call the elevator to the floor.
2. Shall include hall position indicator, LED, Digital.
3. Fixtures shall have up and down buttons with Braille adjacent to the button on the left at intermediate floors and single buttons at top and bottom floors.
4. Buttons shall be made of vandal resistant stainless steel and shall illuminate to indicate a call has been registered. Button shall remain illuminated until the call has been answered. Provide oversized vandal resistant brushed stainless steel cover plates at all push button stations to cover all openings (including the openings that result from removal of existing hall push button stations or any other devices). The Braille signage adjacent to the directional button requires at least half inch lettering denoting the direction of the button
5. Provide engraved graphic (Appendix "O") per ASME A17.1 emergency sign and illustration on all hall push button station plates: "IN CASE OF FIRE USE STAIRWAY FOR EXIT". "DO NOT USE ELEVATOR"
6. Acceptable Manufacturers: PTL Performer Series or Innovation Industries.
7. Refer to details on drawing.
8. Hall push button panel shall accommodate the hall position indicator (HPI).
9. Hallway push button shall be flush wall mounted fixture type.

C. Floor passing chime:

1. Provide a floor-passing chime and voice annunciation to meet ADA requirements. Mount in main car operating panel.
2. Acceptable Manufacturer: Adams Voice or approved Elevator Controller Manufacturer.

D. Communication system (telephone):

1. Provide hands-free vandal resistant emergency telephone in the car, with wiring (shielded pairs) to terminals on control panel in machine room. Engraved with ASME A17.1.
2. Phone shall keep working during power failure. Coordinate work with U-M ITCOM. Phone shall be one push button to talk type and flash when call is answered. Telephone shall be an integral part of the car panel.
3. Annunciator Interface, Auxiliary Relay and 24V LED Board: The board shall be mounted behind the phone in the elevator car operating panel which contains an auxiliary relay that can be tied to DDC panel. The connection from the elevator controller to the DDC panel shall be provided by electrical contractor. When the board is programmed correctly, DDC will receive an alarm whenever the RATH phone detects the phone line has failed. Note that the car traveling cable containing the phone line must be expanded to contain a pair of wires for connection to the nearest DDC panel.

4. Provide a RATH 2100-ALARM unit. Unit shall be mounted in the designated floor elevator lobby per elevator code ASME A17.1 as part of the egress floor hallway push button and shall be wired to the RATH phone in the car operating panel. The alarm unit will contain the code required local alarm light, sounder and a momentary key switch on a label back plate. The traveling cable containing the phone line and pair of wires for the DDC circuit must be expanded to contain a pair of wires from the RATH phone RATH alarm unit.
5. Manufacturer:
   a. RATH Microtech 2100-957-cc telephone (call track), with hand free operation or equivalent.
   b. RATH 2100 Alarm Unit or equivalent..

E. Car traveling lantern:

1. Provide on both sides of car doorjambs and shall be ADA compliant.
2. Manufacturer: PTL Performer series or Innovation Industries Vandal Resistant Series.
3. Refer to detail on drawings.

F. Car fire alarm horn: (omitted)

G. Car position indicator:

1. A LED (Light Emitting Diode) vandal resistant digital type position indicator shall be provided inside car, as part of main car operating panel (COP). It shall indicate the floor at which the car is stopped or passing and the direction the car is traveling. The cover plates shall be #4, brushed Stainless Steel.
2. Manufacturer: PTL Performer Series or Innovation Industries Vandal Resistant Series.
3. Refer to detail on drawings.

H. Special Key Feature:

1. Provide (2) key switches per floor. One shall be for security on & off and one shall be for momentary override. Keys shall be keyed to U of M's KEY SYSTEM and shall be coordinated with KEY OFFICE through Owner Representative.

I. Hall position indicator:

1. Provide at each floor in elevator lobby***OR HALLWAY, ABOVE HOISTWAY DOOR***. Description shall be as in item 2.6.G as part of the hallway push buttons and shall be LED digital type in red color.

2.7 ELECTRIC WIRING:

A. Complete insulated wiring shall be furnished and installed to connect all parts of the equipment furnished by the elevator contractor. Wiring shall conform to the requirements of the latest edition of the National Electrical Code. Include rigid conduit or EMT, at least 1/2" diameter, and short lengths of flexible conduit. Conduit or EMT shall terminate in junction boxes. Conduit, EMT, wiring duct, conduit fittings, enclosures and junction boxes shall be galvanized steel or aluminum.

B. All wiring shall have a flame retarding moisture resisting outer cover and shall be run in metal conduit, flexible metallic tubing, or wire ducts.

C. Traveling cables shall have flame retarding and moisture resisting outer cover. They shall be flexible and suitably suspended to relieve strains in the individual conductors. Provide the required quantity plus at least 10 percent spares. All wiring between telephone cabinet in car and a junction box in elevator machine room shall be provided by the elevator contractor. Conductors shall be numbered to correspond to numbered terminals at the car and machine room.

D. Terminal blocks shall be coded to identify the circuits. Multi-conductor cables shall have the conductor color coded and numbered.

E. The elevator car top shall be provided with a suitable GFCI duplex plug receptacle. Car top lighting shall comply with State of Michigan elevator code requirements.

F. Unless otherwise specified, control wiring shall be a minimum size of #18 AWG. Wire size shall be large enough so that the voltage drop under inrush conditions will not adversely affect operation of the controls.

G. Electrical Receptacle in Car: Provide GFCI duplex electrical receptacle in car. Locate receptacle approximately 2" above finished floor below car operating panel. Provide matching face plate on receptacle.

H. Execution:

1. Install all power wiring in raceway systems. No exposed wiring or conduit shall be run in finished areas without prior written approval of owner.
2. Splice cables and wires only in outlet boxes, junction boxes or pull boxes. (Note - No wire splicing allowed in raceway or wire ducts).
3. Install cable supports for all vertical feeders in accordance with the NEC. Provide Kellum GRIP type supports, which firmly clamp each individual cable and tighten due to cable weight.
4. All terminal strip connections shall be identified with corresponding reference numbers from cable termination chart and electrical straight-line diagrams.

PART 3 - EXECUTION

3.1 ACCEPTABLE ELEVATOR INSTALLERS

A. Acceptable installers: Subject to compliance with the requirements specified herein, installers offering product approved by the Owner are limited to the following listed companies. Elevator installer for project must provide the equipments as specified.

1. Detroit Elevator Co.
2. Kone Elevator Co.
3. Otis Elevator Co.
4. Schindler Elevator Inc.
5. Thyssen Kruup Elevator Co.

***** Note: Above is not a list of elevator manufacturers; it is a list of INSTALLERS only. Elevator installer must provide the equipment specified.

3.2 EXAMINATION

A. Inspect all surfaces, and required embedded anchorage devices, and verify that they are in proper condition to receive the work of this Section. Verify that field measurements are as indicated on approved shop drawings.

1. Prior to preparation of drawings, the contractor shall examine the hoistway and machine room areas and verify that no discrepancies or irregularities exist which would adversely effect the execution of the work.
2. No exposed wiring or conduit shall be run in finished areas without prior written approval of owner.

B. Beginning of installation means acceptance of existing conditions.

3.3 PERFORMANCE

A. Contact speed: Actual speed shall vary no more than 5 FPM from speed specified under any loading condition or direction of travel.

B. Leveling Accuracy: Consistently level within +/- 1/4" under loading conditions.

3.4 ACCESSORIES

A. Provide storage cabinet for the protective pads.

3.5 PERFORMANCE GUARANTEE

A. The elevator contractor shall assume full responsibility to furnish and provide a complete and functional elevator and to obtain and furnish the University final State Elevator Inspection approval. All costs necessary to correct code deficiencies cited by the State Elevator Inspector will be paid by the elevator contractor as part of this Contract at no additional cost to the Owner.

3.6 TECHNICAL TRAINING

A. On site technical training shall be held for the purpose of familiarizing Elevator Support Mechanics with operations and troubleshooting procedures. The session shall accommodate up to ten personnel in each session and consist of forty hours of Training (This to include two 2-day sessions and the fifth day reserved for any additional diagnostic training). Training on equipment controller shall be provided by trained factory service engineers of controller manufacturers through the elevator installers.

3.7 ACCEPTANCE DEMONSTRATION AND PERFORMANCE TEST (COMMISSIONING):

A. Demonstrate to Owner, or Owner's designated representative, the operation of the elevator system. Demonstration shall include:

1. Installation compliance with specifications.
2. Contract speed, capacity, and floor-to-floor performance compliance with specifications.
3. Stopping accuracy and car ride compliance with specifications.
4. Operation of signal fixtures and operation of supervisory or dispatching system.
5. Promptly remove all work rejected by the Engineer for failure to meet specifications and replace the rejected work to comply with requirements, at no additional cost to the Owner. All expenses of repairing work of other Trades damaged by this replacement shall be borne by Contractor.
6. Rejected work which is not made good within a reasonable time, determined by the Engineer, may be corrected by the Owner at Contractor's expense.
7. Upon completion of installation and before final acceptance, conduct a running speed test with full design load to verify compliance with performance requirements. Also refer to Article 1.3 of this division

B. Operating Instructions: Provide instructions to the Owner's personnel, including safety procedures, proper operation of the equipment, and routine maintenance procedures.

C. The laptop computer shall be provided to commissioner prior to start of commissioning process by minimum of (2) weeks. See item 2.3.S.

3.8 CLEANUP

A. Keep work areas orderly and free of debris on a daily basis.

B. Remove filings and loose materials resulting from this work from hoistways.

C. Clean all dirt, oil and grease from machine room and pit equipment and floors.

D. Clean car, car enclosures, entrances, hoistways, operating and signal fixtures and trim of dirt, oil, grease, and finger marks.

E. Polish and shine all stainless steel components.

F. Clean, re-align guide rails for car and counterweight and paint the back of guide rails with black paint.

END OF SECTION

UNIVERSITY OF MICHIGAN
ARCHITECTURE, ENGINEERING AND CONSTRUCTION

ARCHITECTURE & ENGINEERING
326 East Hoover, Mail Stop B
Ann Arbor, MI 48109-1002
Phone: 734-764-3414
Fax: 734-936-3334

-
-
- -

DOCUMENTS

Title Page
Table of Contents
Instruction to Bidders
Form of Proposal
Equal Opportunity Statement
Form of Guarantee

SPECIFICATION DIVISION 14

NUMBER SECTION DESCRIPTION

DIVISION 14 CONVEYING SYSTEMS
SECTION 142423 - HYDRAULIC ELEVATOR

END OF CONTENTS TABLE

EDITOR NOTE:
1-9-15: SUBSTANTIALLY REVISED NEW MASTER SPECIFICATION

DIVISION 14 CONVEYING SYSTEMS
SECTION 14240 - HYDRAULIC PASSENGER ELEVATOR

PART 1 - GENERAL

1.1 GENERAL CONDITIONS

A. The Contractor under this Division (elevator contractor) is referred to the Contract Forms and General Conditions of these specifications, all of which apply to this Division.

1.2 SCOPE OF WORK

EDITOR:
EDIT THE FOLLOWING TO SUIT PROJECT.

A. The work of this division shall consist of the complete replacement of --- hydraulic elevator(s) with a new hydraulic elevator in the ***BUILDING NAME*** Building. Bidders shall include labor, materials, permits, and services required for the complete installation of the elevator system and hoistway equipment as herein specified.

1. In all cases where a device or part of the equipment is herein referred to in the singular, it is intended that such reference shall apply to as many of such devices or parts as are required to make a complete installation.
2. Elevator installer shall obtain all approvals for any required code variances to accommodate this renovation/installation from the Michigan Elevator Safety Division at no additional cost to owner prior to starting construction.
3. Refer to Architectural and Electrical drawings, and coordinate accordingly.

B. Two weeks prior to removal of any equipment, elevator contractor must notify U-M elevator shop dept. at 734-647-2059. U-M. Elevator Department will tag any parts to be salvaged. Contractor shall remove tagged parts, transport parts to building loading dock, and notify U-M elevator department which in turn shall remove salvaged parts from site. All other equipment will become property of contractor who will remove from site in accordance with all codes and regulations.

C. Cost of drilling for hydraulic cylinders into the existing ground shall include any anticipated rocks or other obstructions in the ground, and shall not include any requests for additional cost to owner.

D. Related sections and work of other divisions:

1. Outline of work by University of Michigan's OSEH Department:
   a. Analysis and testing for any soil contamination.
   b. Transportation removed contaminated soil if any, to a dumping site with MDEQ permit which shall be at contractor cost.
   c. Contact number at OSEH is obtainable from construction manager.

2. The elevator contractor shall include all work and materials, expect that listed under "Related work by other contractors", for a complete new state certified hydraulic system.
3. Following is a brief description of work by other divisions included in the contract. This must be done in accordance with the codes having Jurisdiction and approval drawings of the elevator contractor.
   a. Architectural work, refer to architectural drawings and specifications.
   b. Electrical work, refer to electrical drawings and specifications.
   c. Mechanical work, refer to mechanical drawings and specifications.
4. Elevator contractor shall coordinate work of other trades in the hoistway and elevator machine room and be available to operate the elevator in a running "Platform" to allow other trades to complete their work.
5. All telephone cable and conduit between machine room controller terminals and car shall be provided by elevator contractor.
6. Final cleaning: Refer to Architectural specifications, Division 1 and Part 3, Item 3.8 of Division 14.

1.3 CODE AND STANDARD OF REGULATORY AGENCIES

A. Applicable elevators codes shall be in effect based on the time the permit is drawn and shall govern the installation process.

B. Perform work in accordance with applicable codes, the State of Michigan Elevator Code, the National Electrical Code, and the American Society Mechanical Engineering Safety Code for Elevators and Escalators, ASME A17.1 as adopted by the State of Michigan, as referenced therein and all of the provisions in the University of Michigan's Standard General Conditions.

C. Give necessary notices, obtain State and Municipal permits, pay fees in connection with the installation, including sales and use taxes as applicable, and make tests as are called for by the regulations of such authorities. These test(s) or inspection(s) shall be made in the presence of the authorized representative of such authorities and the owner's representative. It is the responsibility of the elevator contractor to provide any variances from the Governing Authority that could be necessary for a complete acceptable elevator installation. Also refer to part 3, item 3.7 of division 14.

D. "Elevator Guidelines to Ensure Accessibility by People with Disabilities".

1. Elevators shall meet the guidelines of the Americans with Disabilities Act using the Uniform Federal Accessibility Standards (UFAS) relevant to elevators (Section 4.10 Elevators) as the technical requirements.
2. Elevators shall meet the requirements of the State of Michigan Department of Labor Building Code relevant to barrier free design and elevators. Section 512.10.

1.4 SAFETY AND SECURITY REQUIREMENTS:

A. The building may be occupied and used by occupants throughout the construction period.

B. Comply with the following safety and security requirements for work conducted in occupied buildings and related areas:

1. Schedule Work with owner.
2. Building Access: During regular business hours (7:30 AM through 5:30 PM; Monday through Friday, except University-recognized holidays), notify Owner's Representative for access to Project site.

C. Individual areas can be opened as often as once each day by the Owner's building facilities manager. When more frequent daily access is required, or when access is required for more than 5 working days, obtain keys from the University Key Office. When working in more than one area, check with the building facilities manager to ensure no scheduling conflicts exist.

1. Building access outside of regular business hours and on weekends is available only with the written approval of the Owner's Representative. Coordinate access with the Owner's Representative and the Owner's Public Safety Department.
2. Security: Purchase University-provided photographic identity badges for each person engaged in on-site work, and ensure that workers wear badges at all times on University property. Coordinate through Owner's Representative.
   a. Badges are required in occupied buildings when the Contract Time is longer than 1 week.
3. For off-hours work time, see general notes on sheet M1.1
   a. Work activities shall not result in excessive noise, vibration, odors, smoke, fumes, etc. in occupied areas. Offending work must be stopped, and rescheduled for off-hours completion: 5:30PM to 6:30AM.

D. Personal Restrictions:

1. Personal Conduct Restrictions: Employees of the Contractor and subcontractors shall comply with the following restrictions regarding personal conduct while on University of Michigan property:
2. Smoking: Smoking is strictly prohibited except in specially designated areas.
3. Harassment: Conduct considered by the Owner as harassing is strictly prohibited, including the use of profanity; or the use of derogatory or demeaning gender or race-related comments or actions. The Owner reserves the right to require the Contractor, at no additional cost to the Owner, to remove from the Project all personnel who violate this policy.

1.5 GUARANTEE

A. The elevator contractor shall guarantee the materials and workmanship of the apparatus installed by him under this specification, and that he will make good any defects not due to ordinary wear and tear or improper use or care, which may develop within warranty from date of final payment or extended new product warranty service period.

1.6 SCHEDULING OF OPERATIONS

A. Contractor must note that building may be occupied at all times. Construction scheduling is of utmost importance. Refer to bid documents for special conditions for additional information. During the progress of the work, job meetings will be subject to call between the Owner's representatives, and the Contractor's representatives. The Contractor shall provide a representative to attend meetings held from time to time for the purposes of schedule coordination and consideration of technical and construction matters. The Contractor's representative shall be the job superintendent or other person who is authorized to act as the agent of the Contractor.

B. Dates:

EDITOR: EDIT RHE FOLLOWING TO SUIT THE PROJECT IF THERE IS MORE THAN ONE ELEVATOR

1. Start and completion of constructions, Refer to bid documents.
2. Any elevator shall not be continuously out of services for more than 4 months.

C. Sequence of work:

1. Work on one elevator at a time.
2. When the project involve more than one elevator in the group. All cars shall be in operation expect the one being worked on.
3. When performing elevator group tie-ins work shall be scheduled to be preformed during off hours through construction manager.

D. Work restriction shall be verified with building manager.

EDITOR:
EDIT THE FOLLOWING TO SUIT THE PROJECT IF THERE IS MORE THAN ONE CAR

E. The elevator contractor shall be responsible to service and to maintain in service car(s) while working on any car in the group.

1.7 NEW PRODUCT WARRANTY SERVICES

A. After completion of the installation, warranty and 24-hour callback service for the equipment furnished under this specification shall be provided for a period of twelve (12) months as part of this Contract. This service shall also include regular biweekly examination. Provide minimum of (26) inspections in the one-year period. In the event the 26 site visitations are not completed the elevator contractor will extend his warranty covering all callbacks, repairs, parts, testing, labor and any other item necessary to keep the elevator in like new condition until the twenty-six warranty site visitations have been completed. Advise U-M elevator department each time before and after service call completion of service (of the installation during regular working hours by trained employees of this Contractor, and shall include all necessary adjustments, greasing, oiling, cleaning, supplies and parts to keep the equipment in proper operation, except parts made necessary by misuse, accidents or neglect caused by). Contractor shall provide written record of work preformed signed by the elevator shop after each visit.

B. All warranty service must be performed by the installers and not by any other services agency. The installer must have an established maintenance and service organization available for performance in the City of Ann Arbor that can provide regular and emergency service, 24 hours a day, every day of the year.

C. It is the responsibility of the U-M elevator department to respond to any emergency regarding elevators. In the event that someone is trapped in an elevator that is under contracted warranty, the University Elevator Department will respond to free the passengers as soon as possible to minimize the inconvenience to users. It is within the right of the University to remove covers, open doors, install monitoring equipment, etc. However, this work will be performed by elevator journey person licensed by the State of Michigan.

D. A detailed record of work performed by University Elevator Mechanics is maintained in the Elevator Shop. Contractors shall contact U-M Elevator Shop to review work performed by University Elevator journey person.

E. The elevator contractor shall be responsible to service record and maintain all elevator emergency circuits (including the fire service circuit, related equipment and sensors) as part of the regular elevator warranty service contract.

F. Include and maintain an oil log in the elevator machine room.

1.8 SUBMITTALS

A. Before beginning fabrications and work, the elevator contractor shall prepare drawings that show the arrangement of the elevator system. Approval of drawings and other data (submit minimum of eight sets), which are to be submitted by the elevator contractor to the owner representative, must be approved U-M before proceeding with fabrication and installation of the equipment. Field verify existing conditions and hoistway sizes prior to preparation of drawings.

B. Submit provisions for delivery of drilling machine into building and setting it in place to provide the drilling process.

C. Samples:

1. Submit samples of car wall, car floor tile and enamel colors.
2. Do not proceed with orders until samples are approved by U-M Engineer/Architect.

D. Shop drawings:

1. Submit eight (8) copies of shop drawings showing the general and detailed arrangement of all elevator equipment. Show ceiling, lighting, signal fixtures, and smoke detectors including routing of exposed conduit and all materials.
2. Show dimensions, weights, and indicate who will perform the work of each item.
3. Statements to the effects of work "by other" shall not be accepted; you must identify who is responsible for the work.

E. Product Data: Submit the manufacturers' specification and data sheets, and standard details. Include pictures, catalog cuts, or other suitable illustrations of all elevator equipment that will be exposed in the finish work, including car, hoistway entrance, and signal and control apparatus. Also include these items in bound set.

F. Certificates:

1. Furnish without cost to the Owner all certificates necessary as evidence that the elevator conforms to the applicable laws, ordinances, and requirements.
2. Certificate shall be mounted in car operating panel.

G. Operation & Maintenance Manuals:

1. At completion of work provide four complete project and specification sets (bound and properly arranged) of the parts lists and operators manuals, copies of approved shop drawings, prior to receiving final payment. Following is a brief summary of items:
   a. Legible schematic wiring diagrams including all changes made during installation.
   b. Description of operation of elevator system installed.
   c. Pump Package: Including motor, jack unit, PVC line, shut-off valve, isolation coupling, pump and accessories.
   d. Buffers.
   e. Guide Rollers on Car.
   f. Controller and Selector: Including parts information on Relays, Printed Circuit Boards, Reverse Phase Relays, Switches, Lamps, Electrical Cables, Monitors, Modems, Diagnostic Hardware, Diagnostic Software, and Overload Protection Devices.
   g. Door Assemblies: Including Hangers, Rollers, Door Motor, Door Operator, Door Clutch Assembly, Door Closers, Door Drive Arms, Related Hardware, Sheaves, Door Guides, Interlocks, Safety Door Edge.
   h. Signal Equipment: Including Car Station, Hall Stations, Position Indicators, Direction Indicators, Fire Service Panel, Smoke Detectors, Key switches, and Pushbutton Assemblies.
   i. Car Top Inspection Station, Limit Switches, Solid State Leveling Control Units, Leveling Switches, Cabs, Doors Sling, Platform, and Alarm Bell.

j. Provide a laptop computer and demonstrate the elevator system operation to owner personal as part of training.
k. Provide a copy of certificate and State permit.
l. Provide emergency phone number.

2. Additional O&M manuals will be required per each machine room.
3. Maintenance records shall document compliance with ASME A17.1 section 8.6.

1.9 ACCEPTABLE PRODUCTS:

A. Fixtures (Car Operating Panel, Hall Push Button): Vandal Resistant, PTL Performer Series or Innovation Industries.

B. MICRO-PROCESSOR BASED CONTROLLER (For Hydraulic Elevators): Motion Control Engineering Model or Elevator Control Corp or SmartRise controllers or Virginia control. with soft start features to limit inrush current and remote diagnostics. All diagnostics shall be compatible with the laptop PC that will be provided and shall be compatible with University existing IBM system.

C. DOOR OPERATOR & EQUIPMENT: GAL Manufacturing Corp. MOVFR operator car and hall door tracks, car and door hangers with roller assemblies. All interlocks, pickup rollers and operating linkage manufactured by GAL.

D. PUMP PACKAGE: Standard dry type pump unit that complies with all duty requirements of this Section consisting of Delaval Imo pump with Maxton Valve and all required accessories.

E. DOOR PROTECTIVE DEVICE: ICU/Gatekeeper 2000 from Adams Elevator Equipment Company, Juans Model 3D.

F. TELEPHONE: RATH Microtech 2100-957-CC telephone integral of cabinet with Rath 2100-Alarm as part of the phone and elevator communications failure. See Item 2.6.D.

G. Roller Guides: Elsco Model "B" on car.

H. Car Top Inspection Station: Adams Model A-910A with A-910X5 guards.

I. Floor Announcement System: Shall be through chime and voice announcement, by Adams or the controller manufacturer and shall be approved by University of Michigan engineer.

J. Cab Manufacturers:

1. G & R Elevator Mfg.
2. Havenstein Burmeister
3. Tyler
4. Columbia
5. Eklund
6. Eklund

K. DOOR GUIDES: NYLUBE

L. Limit Switch: EECO

M. Buffers: Shall be supplied by jack manufacturer. Meeting ASME A17.1 code requirements.

PART 2 - PRODUCTS

2.1 SCHEDULE OF NEW ELEVATOR EQUIPMENT

EDITOR:
EDIT THE FOLLOWING TO SUIT PROJECT.

A. Elevator Number: Existing State Number -----

B. Type of Service: Passenger / Freight

C. Elevator Type: Hydraulic elevator machine room, Located on --- Floor (Room number ---)

D. Quantity: ---

E. Capacity: --- pounds

F. Speed: --- FPM

G. Travel Distance: 0'-0", + or - (Field verify)

H. Number of Stops: --.

VERIFY IF THERE A REAR DOOR OPENING IF NO DELETE THE REAR DOOR OPENING

I. Number of Door Openings: front door opening ----, and rear door opening ----

J. Floors Served: -,-,-,-

K. Main Floor Egress: ---; Alternate Floor Egress: ---

L. Hoistway Size: ---" Long x ---" Wide Approx.; (Field Verify)

M. Pit Dimension: ---- long x ---- wide x ---- deep (Field Verify)

N. Platform Size (Width x Depth): ---- long x ---- wide or size to be maximum allowable but at minimum match the existing.

O. Car Interior Dimensions: ---- Long x ---- Wide x ---- High (dimensions to match existing). (Field Verify)

P. Car Door Size: ---" Wide x ---" High.

EDITTOR: VERIFY THE DOOR OPENING TYPE SPPED

Q. Door opening Type: ---- speed, ---- Opening (match landing size).

R. Machine Type: Hydraulic

COORDINATE POWER SUPPLY WITH THE ELECTRICAL TRADE.

S. Power Supply: --- Volts/ 3 Phase/ 60 Cycle; motor horsepower --- HP.

T. Fire Fighter Service: Yes

U. Independent Service Operation: Yes

EDITTOR: SEE IF WE NEED THIS OPTION FOR THE SPECIAL KEY SWITCHES IN THE PROJECTS

V. Special key switches: Yes, (two key switches per floor, one for security on & off, one for momentary override).

2.2 HYDRAULIC ELEVATOR

A. Oil Hydraulic Machine: The power unit shall be of a compact, self-contained design including pump, drive motor, oil control unit assembly, oil storage tank, removable drip pan a rigid structural steel frame with storage tank and neoprene vibration isolators. Refer to detail on drawings.

B. Pump: The pump shall be a positive displacement screw type, for maximum smoothness and quietness and shall be belt drive by the motor. Do not use pumps mounted in the oil and shall be belt driven to the motor.

C. Motor: The drive motor shall be of premium efficiency meeting NEMA 12.6C table and have a duty rating use with hydraulic elevator systems.

D. Oil Control Unit: The oil control unit shall consist of electrically actuated and hydraulically operated valves with adjustments accessible without removing the assembly from the oil lines. An automatic bypass valve shall provide smooth starting and stopping in the up direction and shall give regulated up leveling speed under varying load conditions in the car. The lowering and down leveling valve shall be fully adjustable for smoothness and speed of operation and shall be designed to close automatically if the power fails. Operation of a manual valve shall permit the car to be lowered at slow speed in the event of power failure. A safety check valve shall hold the car when the pump is at rest and a relief valve shall be provided which is capable of bypassing the entire output of the pump without increasing the system pressure more than 25% above the normal working pressure. Permanently install a liquid filled pressure gage on oil control unit.

E. Oil Storage Tank: The oil storage tank shall be of sufficient capacity for the full travel of the car with a reserve of not less than 10 gallons and shall have a drain connection, means of isolating oil in the tank for servicing of pump and valves, an effective pump suction strainer and a removable cover. The cover shall be designed for low velocity breathing with a protected vent opening to prevent entry of liquids or debris into the tank. Tanks with single small vent openings shall be guarded against accidental blockage, which may cause collapse of the tank during operation of the elevator in the up direction. Tank to be located in elevator equipment room.

F. Oil: Sufficient specially prepared hydraulic oil with greater than 400 degrees F. flashpoint and of proper viscosity and lubricating qualities shall be provided.

G. Sound Reduction With Isolating Panels And Muffler: In addition to selection of individual components to minimize noise generation, a blow-out proof muffler for absorption of hydraulic pulsations shall be installed in the oil line between the pump and the cylinder, and the hydraulic machine shall be provided with rubber isolation pads to prevent transmission of noise and vibration to the building structure. Sheet steel panels lined with sound-deadening material shall enclose the motor and pump location area of the hydraulic machine for reduction of air-borne noise.

H. All Hydraulic Supply Piping: Shall be at least schedule 80 black steel pipe. Threaded pipe only. No grooved fittings are allowed. The system must be free from seepage at joints.

I. Shut-Off Valve: Manually operated valves shall be provided and installed in the oil supply line to isolate the cylinder and plunger unit from the hydraulic machine. Provide two valves-one in pit near jack assembly and another one in the Machine Room near machine.

J. Oil Strainer: A self-cleaning strainer shall be provided and installed in the oil line between the hydraulic machine and the cylinder plunger unit to protect the oil control valves during downward travel of the elevator. The strainer shall have a 40-mesh screen for removal of solid particles and a magnetic drain plug for removal of ferrous materials. The strainer assembly shall be constructed for at least 600 psig. working pressure.

K. Isolation Coupling(s): Isolation coupling(s) shall be provided to abate the transmission of noise produced by the vibration of the pumping unit. Proper location of the isolation coupling(s), in the oil delivery line, shall be determined by the elevator subcontractor.

L. Cylinder and Plunger Unit:

1. The cylinder shall be fabricated of steel pipe, closed at the bottom and provided with a removable cylinder head and packing gland at the top. The cylinder head shall have a bronze, babbit or phenolic-lined bearing and an integral drip ring. Packing shall be of the self-adjusting type not requiring external adjustment and shall allow operation of the plunger with minimum friction. The packing gland shall be arranged to return automatically to the reservoir any oil, which may escape the packing ring. Structural steel shapes shall be provided to support the cylinder and to transmit vertical loads to the pit floor.
2. The exterior of the cylinder shall be treated with a corrosion resistant compound and double-lap wrapped with a commercial grade wrapping, such as Scotchwrap or Tapecoat, before installation.
3. The plunger shall be constructed of seamless steel pipe or tubing turned true and smooth and polished to a fine finish. A stop plate to prevent the plunger from leaving the cylinder shall be welded to the bottom of the plunger.

4. Grey cast iron or other brittle materials shall not be used and the cylinder and plunger unit shall be factory tested at not less than 600 psi, or as per ASME A17.1 and State of Michigan Elevator Code, for strength and freedom from leakage. Units of multiple section construction shall be securely joined by couplings. Cylinder couplings shall have all joints welded before installation to prevent leakage.
5. The well hole for the cylinder shall be provided by the Elevator Contractor, including drilling and dirt removal at no additional cost to the owner.
6. Provide outer cylinder casing and related schedule 40 PVC protective covering. Casing shall be schedule as per Michigan Elevator Code requirements, with welded joints and welded steel bottom.
7. Provide a stainless steel drip pan (at pit floor) or drip ring around cylinder with scavenger pump, oil piping between pump and oil storage tank and all related power wiring.

2.3 PROGRAMMABLE CONTROLLERS FOR HYDRAULIC ELEVATOR

A. Controller Description:

1. The elevator controller shall utilize a microprocessor based logic system and shall comply with ASME 17.1 safety code for elevators and escalator. The system shall provide comprehensive means to access the computer memory for elevator diagnostic purposes without need for any external devices, and shall have permanent indicators to indicate important elevator status as an integral part of the controller. Systems that require hookup of external devices for troubleshooting are not acceptable. The elevator control equipment shall be provided such that at least three (3) elevator service companies can maintain the equipment. Immediate availability of replacement parts shall be guaranteed and no special proprietary diagnostic devices will be utilized. An O.E.M. control, serviceable only by the O.E.M. will not be accepted. Controller shall be provided with the capability of in-the field changes for certain variables such as door time. These changes should be stored permanently using non-volatile memory. Thus if the power to the unit is disconnected, the system will maintain the programmed variables. The Car Diagnostic Display shall have the capability of selecting either the operational or programming modes and/or displaying the status of all inputs and outputs and capability of remote diagnostics to be interfaced with U-M's elevator shops existing IBM compatible computer system.
2. Failure of any single magnetically operated switch, conductors, or relay to release in the intended manner; or the occurrence of a single accidental ground or short circuit shall not permit the car to start or run if any hoistway door or gate interlock is UNLOCKED or if any hoistway door or car door or gate contact is not in the made position. Furthermore, while on car top inspection or hoistway access operation, failure of any single magnetically operated switch, conductors or relay to release in the intended manner; or the occurrence of a single accidental ground shall not permit the car to move even with the hoistway door locks and car door contacts in the closed or made position.

3. Provide a dedicated permanent status indicators on the controller to indicate when the safety string is open, when the door locks are open, when the elevator is running at high speed, when the elevator is on independent service, when the elevator is on fireman's service, when the elevator out of service timer has elapsed or when the motor limit timer or valve limit timer has elapsed. When duplex operation is provided a switch, shall select which of the two cars statuses is to be displayed on the indicators, in addition, provide means of displaying other special or error conditions that are detected by the microprocessor.
4. The elevator shall not require the functioning or presence of the microprocessor to operate normally during car top inspection operation or hoistway access operation in order to provide a reliable means to move the car if the microprocessor fails.
5. Provide a motor limit timer function which in the event of the pump motor being energized longer than a predetermined time, shall cause the car to descend to the lowest landing, open the doors automatically and then re-close them and the elevator shall then be rendered unresponsive to any automatic operation car door open pushbutton shall remain operational. Operation may be restored by cycling the power disconnect switch or putting the car on access or inspection operation.
6. Provide a valve limit timer function which in the event of the pump motor being energized longer than a predetermined time, shall cause the car to descend to the lowest landing, open the doors automatically and then re-close them and the elevator shall then be rendered unresponsive to any automatic operation car door open pushbutton shall remain operational. Operation may be restored by cycling to power disconnect switch or putting the car on access or inspection operation.
7. Low Oil Control:
   a. A low oil control feature shall protect the hydraulic components if the elevator fails to complete its upward travel in the normal time.
   b. Actuation of the low oil control circuit shall stop the pump and lower the car to the lowest landing. Power-operated doors shall open to permit passengers to depart and shall then close. Car door open pushbutton shall remain operational. The car shall remain parked at that landing completely removed from demands for service.
   c. To return the car to normal service, the malfunction shall be corrected and the elevator controls reset in the machine room.
8. Provide an out of service timer (T.O.S.) which will automatically take the car out of service if the car is delayed in leaving the landing while there are calls existing in the building. The car shall not respond to hall calls while in this mode of operation.
9. Provide door protection timers for both the open and close directions which will help protect the door motor and which will help prevent the car from getting stuck at a landing. The door open protection timer shall cease attempting to open the door after a predetermined time in the event that the door is prevented from reaching the open position. The door close protection timer will reopen the doors for a short time in the event that the door-closing attempt fails to close the door locks after predetermined time.

10. Provide a minimum of three different door standing open times. A car call time value shall predominate when a car call only is cancelled. A hall call time value shall predominate whenever a hall call is cancelled. In the event of a door reopen from the safety edge, photo eye, a separate short door time value shall predominate.
11. Provide a Door Timing - Separate adjustable timing means to establish independent minimum passenger transfer time for car stops, hall stops, main lobby stops, and door reversal operations (short door time).
12. Hall call or car call registration and lamp acknowledgment shall be by means of a single wire per call besides the power busses. Systems that register the call with one wire and light the call acknowledgment lamp with a separate wire are not acceptable. Phase I emergency recall operation, and Phase II emergency in-car operation shall be provided within the controller according to ASME A17.1 and applicable local codes.
13. Independent service operation shall be provided such that actuation of a key switch in the car-operating panel will cancel any existing car calls, and hold the doors open at the landing. The car will then respond only to car calls and will ignore hall calls. Car and hoistway doors will only close by constant pressure on car call buttons or a door close button until the car starts to move. While on independent service any hall arrival lanterns or jamb mounted arrival lanterns and gongs shall be inoperative.
14. The car shall be equipped with two-way leveling to automatically bring the car within plus or minus 1/4 inch of exact level at any landing regardless of load up to maximum capacity.
15. A selector switch shall be provided on the controller to select high or low speed during access or inspection operation as long as speed does not exceed 150 feet per minute.
16. A test switch shall be provided. In the "test" position, this switch shall allow independent operation of the elevator without any door open functioning for purposes of adjustment or testing the elevator. The elevator shall not respond to hall calls and shall not interfere with the other car in a duplex installation.
17. A timer shall be provided to limit the amount of time a car is held at a floor due to a defective hall call or car call including stuck pushbuttons. Call demand at another floor shall cause the car to eventually ignore the defective call and continue to provide service in the building.
18. Door Timing: Separate adjustable timing means shall be provided to establish independent minimum passenger transfer time for car stops, hall stops, main lobby stops, and door reversal operations (short door time).
19. Automatic Operation of the Car Lighting shall be provided meeting the requirements of ASME A17.1. The Feature shall allow the car lights to be turned off when the following conditions exist for not less than five minutes: the car is at a floor, the doors are closed, there is no demand for service and the car is on automatic operation. Momentary interruption of any of these conditions will cause the car lights to be turned on. The Automatic Operation Feature shall be able to be turned on or off as desired by the owner from the Elevator Controller.

20. Simplex selective collective automatic operation shall be provided for the single car installations. Operation of one or more car call or hall call buttons shall cause the car to start and run automatically provided the hoistway door interlocks and car door contacts are closed. The car shall stop at the first car call or hall call set for the direction of travel of car. Stops shall be made in the order in which the car calls or hall calls set for the direction of operation of the elevator are reached, irrespective of the order in which they were registered. If only hall calls set for the opposite direction of travel of the elevator exist ahead of the car, the car shall proceed to the most distant hall call, reverse direction, and start collecting the calls.
21. Collective Operation:
    a. Operation shall be automatic by means of the car and landing buttons. Stops registered by the momentary actuation of the car or landing buttons shall be made in the order in which the landings are reached in each direction of travel after the buttons have been actuated. All stops shall be subject to the respective car or landing button being actuated sufficiently in advance of the arrival of the car at that landing to enable the stop to be made.
    b. If all calls in the system have been answered, the car shall park at the last landing served or the pre-determined home landing.
22. Home landing operation shall be provided and, if no calls are registered shall cause the car to travel to a predetermined home landing floor and stop without providing a door operation. The ability to change home landing feature shall be provided.
23. If the car is en-route to the home landing and a call appears from the direction opposite to which the car is traveling, the car shall slow down, stop, and then accelerate in the opposite direction, toward the call. The home landing function shall cease instantly upon the appearance of a normal call and the car shall proceed non-stop in response to any normal call.
24. Florescent lighting shall be at the front and back inside the controller cabinet. Ventilation fans are part of controller cabinet.
25. Elevator controller shall be Motion Control Engineering (MCE) or Elevator Controls Inc. Elevator controller shall be modified to include all features noted above including soft start features to limit inrush current and remote diagnostics and shall be compatible with the existing U-M system. All systems shall have remote diagnostics.
26. Phase Protection: Provide 3-phase power monitor for elevator power supply, which monitors phase loss, low voltage, phase reversal, phase unbalance, and has manual and automatic reset. Level in manual position.
27. Elevator controller is to be factory equipped with provisions for emergency power connections.

B. Auxiliary Operations:

EDITOR:
EDIT THE FOLLOWING TO SUIT PROJECT.

1. Firefighter's Service:

a. The following operation is for the use of firemen and other authorized personnel. Per ASME A17.1.

b. Automatic passenger elevators shall conform to the following:
   1) Provide a three position (on, off, and by-pass) key-operated switch at the main floor for each single elevator or each group of elevators. The key shall be removable only in the "on" and "off" positions. When the switch is in the "on" position, the elevators controlled by this switch and which are on automatic service shall return non-stop to the main floor, and the doors shall open and remain open.
   2) An elevator traveling away from the main floor shall reverse at the next available floor without opening its doors.
   3) Elevators equipped with automatic power-operated doors and standing at a floor other than the main floor, with doors open, shall close the doors without delay and proceed to the main floor.
   4) Door reopening devices for power-operated doors, which are sensitive to smoke, heat or flame shall be rendered inoperative.
   5) All car and corridor call buttons shall be rendered inoperative and all call registered lights and direction lanterns shall be extinguished and remain inoperative.
   6) A car stopped at a landing shall have its "Emergency Stop Switch" rendered inoperative as soon as the doors are closed and it starts toward the main floor. A moving car, traveling to or away from the main floor, shall have its "Emergency Stop Switch" rendered inoperative immediately.
   7) A sensor in each elevator lobby, which when activated prevents car from stopping at that floor, shall not be substituted for the above requirements.
   8) The university elevator shop will supply to the installing contractor a "Security Box" (key box) for installation at the egress floor.

c. Sensing Devices: In addition to the key-operated switch required in "b" above, heat and smoke or products of combustion sensing devices shall be furnished and installed by fire alarm contractor in each elevator lobby at each floor and the main floor (Note - Egress floor is --- floor) alternate floor is for the elevator --- floor. The activation of a sensing device in any elevator lobby shall cause all cars in all groups that serve that lobby to return non-stop to the main floor. The key operated switch when moved to the "by-pass" position, shall restore normal service independent of the sensing devices. Sensors at each floor shall be connected separately from sensors at main floor.

d. Provide a three position (off-hold-on) key-operated switch in each car operating panel per ASME A17.1 Fire Service Key Switch and shall be effective only when the egress floor key-operated switch is in the "on" position or a sensor has been activated and the car has returned to the egress floor or other approved level. The key shall be removable in all positions, and shall not change the operation until the car is at a floor with doors fully opened.

e. The operation of elevators on Fire service shall be as follows:
   1) An elevator shall be operable only by a person in the car.
   2) Elevators shall not respond to elevator corridor calls.
   3) The opening of power-operated doors shall be controlled only by continuous pressure "open" buttons or switches. If the switch or button is released prior to the doors reaching the fully open position, the doors shall automatically re-close. Open doors shall be closed by continuous pressure on "Door Close" switch or button.
   4) Means shall be provided to cancel registered car calls.
   5) When the switch is in the 'hold' position, the car shall remain at the floor with its doors open.
   6) Elevators can be removed from individual car fire service by moving the key-operated switch to the "off" position and the car is at the main floor or other approved level.

f. The switches required above shall be operated by the same key but are not a part of a building master key system. There shall be a key for the main floor switch and for each elevator in the group and these keys shall be kept on the premises by persons responsible for maintenance and operation of the elevators, in a location readily accessible to authorized persons, but not where they are available to the public. TURN OVER ALL KEYS TO PROJECT ENGINEER. These keys shall be Adams Fire Service Keying System.

g. Instructions of operation shall be provided as required by code.

2. Elevators arranged for dual operation shall:

a. Conform to the automatic operation described above when on automatic operation.

b. When firefighter's emergency operation is activated and the elevator is on independent or inspection operation the elevator shall be provided with a signal system consisting of both visual and audible types to alert the attendant to close the door and return non-stop to the main floor or other approved level. Provisions shall be made to alert the attendant in the same manner when a heat and smoke or products of combustion sensing device is activated.

EDITOR:
EDIT THE FOLLOWING TO SUIT PROJECT.

1) Floor Fire Service: ---- floor.
2) Alternate floor fire service: ---- floor.
3) The activation of a sensing device at the lobby (item 2 above) shall cause all elevators to return non-stop to the alternate floor and the doors shall open and remain open. (The alternate fire service floor shall be defined as any building floor other than the main fire service floor) which will be --- floor.

4) Operation to the elevator shall conform to "Firefighters' Service". When sensing devices are activated, the elevators shall return non-stop to the designated main floor and the doors shall open and remain open. When building sensors activate at the main fire service floor, elevator shall automatically be dispatched to that building's --- floor, which has been designated "Alternate" fire service floor where the elevator doors shall open and remain open.

THESE ARE OPTIONS. DELETE THEM IF THEY ARE NOT REQUIRED BY THE PROJECT.

C. Load Bypass Operation:

1. To automatically delete hallway calls when car is loaded to its limit. Load bypass operation shall be adjustable from the controller to adjust the load at which to bypass hall calls and not delete them.

D. Special Key Switches:

1. Provide (2) key switches per floor. One shall be for security on & off and one shall be for momentary override. Keys shall be keyed to U of M's KEY SYSTEM and shall be coordinated with KEY OFFICE through Owner representative.

E. Anti-nuisance Feature:

1. Provide an anti-nuisance operation to prevent the elevator control system from responding to a faster than normal rate or registration of car calls. The "normal" rate of registration of car calls shall be programmable on an individual elevator basis within the group.
2. If the anti-nuisance monitor determines that the rate of registration of car calls is excessive as compared to the pre-programmed rate of car calls, all car calls shall be canceled and shall be required to be reregistered.

F. Independent Service Operation:

1. Independent service operation shall permit one or more elevators to be removed from the group control and used without interfering with the normal operation of the reminder of the group.
2. Provide a two-position switch in the car-operating panel for each elevator.
3. When the switch is placed in the independent service position, the mode of operation shall be amended as follows:
   a. The car is disconnected from the group supervisory system.
   b. Existing car calls shall be canceled.
   c. The cars shall bypass landing calls.
   d. Continuous pressure on the car button of the selected floor shall close the doors and start the car toward the selected floor. Pressure shall be required on the button until the car starts. Releasing the car button before the car starts shall cause the doors to automatically reopen.
   e. After the car has arrived at the floor and the doors have automatically opened, the cars shall remain until another car button is pressed or until the key switch is returned to the normal position.

f. Should all cars be put on independent service, all hall calls registered shall be canceled. Further registration of hall calls shall be limited.

EDITOR:

DELETE THE FOLLOWING IF YOU DO NOT HAVE EMERGENCY POWER.

G. Emergency Power Panel:

1. Emergency switch and annunciation panel shall be a 12"x12" brushed stainless steel, with lockable cover, fully recessed panel to be located on the egress floor where indicated on drawings. The panel shall have indicating red lights showing locations of cars during emergency power condition.
2. A key switch shall have auto, manual ----. ***NO. OF ELEVATORS***
3. The panel shall be labeled as "Elevator Emergency Panel".
4. See details on sheet ---.

H. Computer For Elevator Controller Diagnostics:

1. Provide a Dell Laptop, Model "Dell Latitude E6420" with Intel vPro Advanced Systems Management loaded with Diagnostics software for the installed elevator controller.
2. Liftnet monitoring system shall be installed and operational by elevator contractor.
3. Laptop Requirements:
   a. Dell Latitude E6420
   b. Operating system Genuine Windows 7 professional, no media, 32-bit, English.
   c. Primary Storage: 250GB 5400rpm Hard Drive
   d. Processer Branding: Intel Core i5 vPro Label.
   e. Processor: Intel Core i5-2520M (2.50GHz, 3M cache) with turbo Boost Technology 2.0.
   f. LCDs: 14.0" HD Anti-Glare LED backlit.
   g. Memory: 4.0GB, DDR3-1333MHz SDRAM, 2, DIMMS
   h. Internal Keyboard: Inertial English keyboard Dual Pointing Keyboard
   i. Primary Optical Device: 8X DVD+/-RW w/Roxio and Cyberlink Power DVD, no media.
   j. Wireless LAN: Intel® Centrino® Advanced-N 6205 802.11a/b/g/n Half Mini Card
   k. Energy Star & EPEAT: Energy star 5.0 Enabled / EPEAT Gold
   l. USB Optical Mouse
   m. Primary Battery: 6-cell (60WH) Primary Lithium Ion Battery
   n. AC Adapter: 90W /C ADAPTER (3-PIN)
   o. carrying case: Slim Nylon Case (2 Pocket)
   p. Support Services: 4 Year Basic Hardware Service with 4 Year NBD Limited Onsite Service After Remote Diagnosis
   q. 4 year complete care accidental damage protection.
4. Laptop shall be compatible with all new elevator controllers.

I. Acceptable Manufacturers:

1. Motion Controller Engineering (MCE) model HMC-100.
2. Elevator Controls Inc.

J. Machine Finish and Painting:

1. All exposed surfaces of machines and motors, and controllers, shall be repainted after field installation and before acceptance by owner with rust resisting gloss enamel paint of light gray color.

2.4 HOISTWAY EQUIPMENT & HOISTWAY ENTRANCES

A. Provisions for Hoistway Access:

1. Elevator door safety plug-lock- Keyway - Furnish and install hoistway door unlocking devices at all landings with Tri-lock MFG. & MAINT. CORP. key NO. 6950 in accordance with requirements of the latest Edition of the American Standard Safety Code for Elevators, Dumbwaiters, and Escalators, and as permitted by the Local Code.
2. The hoistway door-unlocking device shall unlock and permit the opening of the hoistway door from any floor irrespective of the position of the car. The design of the device shall be such as to prevent unlocking the door with common tools. The means for unlocking the door shall be available and used only by inspectors, maintenance, and repair personnel.
3. Access Switches - Furnish and install hoistway access switches and associated devices (at the top and bottom landings in accordance with requirements of the latest Edition of the American Standard Safety Code for Elevators, and Escalators, and as permitted by the Local Code.

B. Hoistway Doors:

1. New doors shall be flush hollow metal panels fabricated of No. 16 U.S. gauge steel, minimum. The doors shall be 1-1/4" thick and reinforced with continuous members. Panels shall have sound deadening insulation. Doors shall have removable non-metallic gibs to run in the sill guideway with minimum clearance. Door panels shall conform to the National Elevator Code ASME A17.1 and the Underwriter's Laboratories 1-1/2 hour fire test requirement. Door unlocking devices shall be provided at all floors and as required by local codes. Sight guards shall be provided for all entrances. Provide new hoistway doors at all landing. The doors shall be equipped with nylube door guides.
2. Hoistway landing interior finish shall be painted black.
3. Hoistway landing Doors exterior finish shall be stainless steel.
4. Hoistway door unlocking devices at all landing shall be provided with TRI-LOCK removable plugs with key number 6950.

C. Top of Car Operating Device:

1. An operating device shall be provided on the top of the car located in the front between the car crosshead and hoistway door, complete with an Emergency Stop Switch, GFCI plug, fire service lamp and buzzer, lamp and guard, a Selections Switch, UP, DOWN and safety operating Buttons. This device shall comply with ASME A17.1 and local codes. Using Adams model A-912CG with Light guard.
2. Operation from the top of the car shall not be permissible unless all electric door contacts are closed.
3. Elevator shall be provided with at least two electric light fixtures and convenience outlet fixture on the car top. The two light fixtures combined shall provide an illumination level of not less than 10fc at the car top. The light fixture shall be permanent and be of the fixed or portable type and shall be equipped with guards. The light switch shall be accessible from the landing when accessing the car top.

D. Pit Stop Switch:

1. A switch or switches shall be located in each elevator pit, in accordance with ASME A17.1 and local codes, which when turned to the "off" position will cause the electric power to remove from the elevator pump motor. This switch shall be lockable in the "off" position.

E. Emergency Alarm Bell:

1. Provide an alarm bell with its own battery source and recharging unit for emergency power unit, mounted on the car. When the emergency alarm bell button in the car is pressed, it shall illuminate and the alarm bell shall sound. Operation shall be in accordance with ASME A17.1 and the State of Michigan Elevator Code.
2. Indicate DBA level of the alarm bell (80-85 DBA).

F. Guide Rails

1. Provide steel tee guide rails to meet ASME A17.1 requirements, including suitable brackets and clamps for attachment to the building structure. The guide rails and car frame shall be so located that the car is in balance with the guides. The machined tongue and groove joints shall be fitted with machined fishplates fastened to each rail with at least 4 through bolts. Rails are to be cleaned of any shipping or protective coatings at time of installation.
2. All joints shall be located free of interference with supporting clamps and brackets. Shims used to obtain rail alignment shall be designed to remain in position, even though the fastening bolts may be loosened.
3. The guide rails shall be installed and aligned with their machined faces plumb within one-eight of an inch from top to bottom of the hoistway.
4. Minimum Rail Size shall be 16 pounds per foot. Upgrade rails based on application.

EDITOR:
DELETE THE NEW GUIDE RAIL IF THE GUIDE RAILS ARE TO BE REUSED FOR CAR AND COUNTERWEIGHT.

5. The car and counterweight guide rails shall be realigned, refinished and cleaned so that the faces of the rails are plumb within one-sixteenth (1/16) of an inch in 100 feet of travel. Refinish rails for smooth operation and paint back plains with black paint.

G. Buffers:

1. Buffers shall be installed in the pit to meet ASME A17.1 requirements. These buffers shall be fastened to steel channels furnished and installed by the Elevator Contractor.

H. Normal Stopping Devices:

1. Slow-down and normal stopping devices shall be furnished and installed for each car. These devices shall be so arranged that, as the car approaches either terminal landing, a roller with noiseless tread, mounted on a movable arm, shall come into contact with cams located in the car. Through the operation of the stopping device, bring the car automatically to a smooth stop at the terminal landing. The full width of the roller tread shall engage the cam surface. The emergency car stopping system shall comply with the ASME A17.1 requirements.

I. Landing System:

1. This landing system shall provide high speed stepping signals, one-floor-run stepping signals, leveling, and door zone signals. Each output signal shall be electrically isolated and shall be capable of reliably operating at 120 VAC.
2. The system shall consist of a steel tape with mounting hardware to accommodate the complete travel of the elevator, a car top assembly with tape guides and sensors, and magnetic strips for stepping and leveling.
3. The leveling and stopping accuracy of the system shall be within 1/4 inch of the floor level and shall correct for over travel or under travel to within the same accuracy, regardless of load variations or direction of travel.
4. Landing system shall be as provided by the elevator controller manufacturer.

J. Entrance:

1. New entrance shall consist of flush hollow metal door panels, bolted unit type frames, sill's hanger(s), hanger covers, fascia plates, headers, struts, site guards and hardware.

K. Frames:

1. New unit frame shall be fabricated of No. 14 U.S. gage steel comprising the head and side jamb sections, which shall be securely bolted to form one piece unit construction and shall be securely fastened to the sills and hanger supports. They shall be returned on the hoistway side to present a neat appearance.

EDITOR:
REUSE ON REPLACEMENT PROJECTS WHERE POSSIBLE FOR CAR AND COUNTERWEIGHT

2. To be reused, sand, fill in dents and paint matching existing color. Enamel paint to be used. Provide coat prior to the finish for each floor.

L. Sills:

1. Sills shall be extruded aluminum construction with a non slip wearing surface. They shall be supported on steel brackets and securely fastened to the floor. Grooves for the door guides shall have minimum clearance for the guides. The sills must suitable for "class C3" loading.

EDITOR:
REUSE ON REPLACEMENT PROJECTS WHERE POSSIBLE FOR CAR AND COUNTERWEIGHT

2. To be reused, clean and polish sills.

M. Struts:

1. A 3"x 3" x ¼" steel angle struts shall extend from the sill to the building beam above and shall be securely fastened to ensure rigidity and adequate support for the header.

EDITOR:
FOR REUSE STRUTS

2. To be reused sand, prime and paint black.

N. Headers:

1. Headers shall be constructed of 3/16" formed steel to provide support for the frame and hangers.

EDITOR:
REUSE ON REPLACEMENT PROJECTS WHERE POSSIBLE FOR CAR AND COUNTERWEIGHT

2. To be reused, sand, prime and paint black, or provide new.

O. Hanger Covers:

1. Hanger covers shall be fabricated of No. 14 gauge steel extending the full width of the hanger pocket. A section shall be easily removable from inside the car for servicing the hanger.

EDITOR:
REUSE ON REPLACEMENT PROJECTS WHERE POSSIBLE FOR CAR AND COUNTERWEIGHT

2. To be reused, sand, prime and paint black, or provide new.

P. Fascia, Covers, and Toe Guards:

EDITOR:
FOR NEW FACIA COVERS AND TOE GUARDS

1. Fascia, including hanger covers, toe guards and dust covers shall be fabricated of No. 16 U.S. gauge steel. Fascia shall span the width of the opening plus 6 inches. Dust cover extends a minimum of 8 inches above the header and the toe guard shall extend a minimum 8' below the sill. Both shall return to the wall at 60 deg. Angle.
2. Finish:
   a. Struts, headers, hanger cover, fascia, dust covers, and toe guards shall have matte black finish. New entrance frames (existing) shall be finished in stainless steel of color selected by owner. All landing doors shall be new and finished in enamel of color selected by owner.
   b. All existing heads and jambs shall be stripped to bare metal, prepared with primer and finished with two coats of enamel paint.

EDITOR:
FOR REUSE FACIA COVERS AND TOE GUARDS

3. To be reused sand, prime and paint black or provide new.
4. Finish:
   a. All existing heads and jambs shall be stripped to bare metal, prepared with primer and finished with two coats of enamel paint.

2.5 CAR EQUIPMENT & CAR ENCLOSURE

A. Power Door Operation:

1. The car and hoistway doors shall be operated quietly and smoothly by an electric operator, which shall open and close the car door and respective hoistway door simultaneously. The doors shall open automatically when the car is leveling at the respective floor and, when operating without an attendant, shall close after a predetermined time has elapsed. Momentary pressure on the "Open Door" button in the car shall cause the doors to remain open or, if closing, to reopen and reset the time interval.
2. The doors shall be opened at rated speed and the closing speed shall be per Code. Door closing force shall be as allowed by code.
3. An electric contact for the car doors shall be provided which shall prevent elevator movement away from the floor unless the door is in the closed position as defined by code.
4. Each hoistway door shall be equipped with a sill mounted auxiliary door closing device and a positive electro-mechanical interlock to prevent the operation of the elevator until the interlock circuit is established and the doors are locked and closed.
5. Car doors shall be provided with zone locking.
6. Acceptable Manufacturer: Gal, MOVFR operator.

B. Landing Door Hangers

1. Each hoistway door shall be suspended by two (2) sheave type hangers. Each hanger shall consist of a polyurethane tread on a metal hub equipped with precision ball bearings mounted onto a steel bracket. The hanger sheaves shall not be less than 3-1/4 inches in diameter. The track shall be so shaped as to permit free movement of sheaves without regard to vertical adjustment of the sheave brackets. An up-thrust roller shall be provided beneath the track and each sheave wheel, capable of withstanding a vertical thrust equal to the carrying capacity of the upper sheave. The up-thrust roller shall be adjustable for fine vertical adjustment and the face of the roller shall be so shaped as to conform to the bottom face of the hanger track. Doors closers shall be sill mounted.
2. Manufacturer: GAL.

C. Door Protection and Reopening Device:

1. ICU/Gatekeeper 2000 from Adams or Janus 3D.

D. Adaptive Door Timing:

1. Door open times will be varied subject to the call situation causing the stop:
   a. Shortest timing, when car call only causes stop.
   b. Longer timing, when hall call only causes stop.
   c. Longest timing, when coincident hall and car calls exist.
   d. All timing shall meet ADA guidelines as a minimum.
2. The door opening time, measured from the instant the doors start to open until within 1" of fully open position, shall not exceed code standard.
3. Long door and short door "hold open" times shall be set at 4.0 and 2.5 second respectively and shall be ADA complainant.

E. Car Frames:

1. Car frame shall consist of structural steel members that are securely welded or bolted together and the frame shall be so reinforced and braced as to relieve the car enclosure of undue strains. Steel bumper plates shall be provided to engage the buffers.

F. Car Platforms and Flooring:

1. Each passenger type car platform shall consist of a structural steel frame with a wood and metal composite floor (i.e. one layer of 3/4" marine grade plywood plus 14 gauge steel plate plus 3/4" thick marine grade plywood plus finish flooring). Top finish flooring on car shall be furnished and installed by Elevator Contractor, shall be as described in item 2.4.J.
2. Each passenger type platform shall be equipped with an extruded aluminum threshold and a steel toe guard at the loading edge. The under side of the platform shall be fireproofed to comply with local codes.
3. The platform shall be capable of the capacity of the car being loaded in one-piece across the entrance of the car and loading.

G. Car Isolation:

1. The steel platen plate used to secure the car frame to the plunger shall be provided with rubber pads to effectively prevent transmission of vibration from the plunger to the complete car frame, platform and car enclosure.

H. Roller Guides for Car:

1. Each roller guide shall consist of three wheels (minimum roller diameter - 6") tired with a durable resilient material; each rotating on ball bearings having sealed-in lubrication; all assembled on a substantial metal base and so mounted as to provide continuous contact of all wheels with the corresponding rail surface under all conditions of loading and operations. The wheels shall run on three finished rail surfaces. The roller guides shall be properly secured at top and bottom on each side of car frame. Provide roller guides at top and bottom of car.
2. The roller guides shall run on dry guide rails.
3. Manufacturer: ELSCO Type B.

I. Car Doors:

1. Provide car doors with flush hollow stainless steel panels. Panels shall have sound deadening insulation. Doors shall have removable non-metallic gibs to run in the sill guide way with minimum clearance. Door panels shall conform to the National Elevator Code ASME A17.1 and the Underwriter's Laboratories 1-1/2 hour fire test requirements. Door unlocking devices shall be provided as required by local codes. The door shall be equipped with nylube door guides.
2. Car door hangers and tracks shall be provided similar to hoistway doors.
3. Door finish shall be #4, brushed stainless steel.

J. Car Enclosures:

1. All cab material, design, lighting, ventilation and exits shall comply with "American National Standard Safety Code for Elevators, ASME A17.1 and/or local codes. Where codes conflict the more stringent shall apply.

2. Wall panels and reveals shall be of rigidized 316 stainless steel construction and applied to a steel shell.
3. Returns shall be of stainless steel construction and have a #4 brushed finish. Cutouts shall be provided for operating elements and fixtures. Minimize thickness of return to maximize clear floor area.
4. Canopy shall be constructed from formed and reinforced 16 gauge steel finished in white enamel and shall have an overall height of 8'0" from the finished floor. An emergency exit shall be provided which is locked from the top of the car.
5. Provide in vertical beveled through lighting per LED that will apply 10 foot-candles in cab at floor level. Coves shall be made of stainless steel with #4 finishes and located at ceiling level with to meet the requirements LED lights on both sides of cab. Also comply with UFAS lighting level requirements. Provide stainless steel protective guards consisting of two mesh, 14 gauge, wire cloth encased in a U-channel frame and of adequate size for maintenance. These guards shall be secured in place with tamper proof screws. Submit shop drawings prior to fabrication for Owner's approval.
   a. LED Model SB-1 Manufacturer by Man-D-Tec.
6. Entrance columns shall be #4 brushed stainless steel finish. Columns shall run from floor to canopy, be finished in a vertical grain, and shall be integral to the returns.
7. Entrance transom shall be #4 brushed stainless steel finish. Columns shall run from floor to canopy. Transom shall run the full width of the car and be finished in a horizontal grain.
8. Doors shall be of hollow stainless steel construction with #4 brushed finish, suitably reinforced and sound deadened. Equipped with NYLUBE door guides.
9. A single speed fan shall be provided that matches the ceiling and is mounted to the canopy. Air intake to the fan shall be through the 3/8" diameter holes (adequate in number to allow free passage of required air quantity) drilled in canopy. Submit shop drawing of canopy for approval prior to fabrication. CFM as required per ASME A17.1. Sound power is to be 45 DBA max.
10. A 3/8" x 2" bar handrail with radiuses ends of #4 brushed stainless steel finish shall be provided to meet code requirements on side and back walls but shall not interfere with car operating panel.

EDITTOR: IN CASE THE ELEVATOR REPLACEMENT IN PARKING STRUCTIOR USE NICKEL SILVER

11. Car sills shall be extruded aluminum. Car sills for elevator in parking structures shall be nickel silver.
12. Finished floor covering shall be furnished and installed by the elevator contractor.
    a. Flooring shall be "Endura" style rubber tile by Burke Flooring. Texture and color to be selected by owner.
13. Provide removable protective wall pads with padlocks inside elevator car to protect the wall panels. Pads shall meet all codes for elevator car enclosures, and be equal to Palmer "PalmTuff Vinyl Pads". Color to be selected by owner from mfg standards.
14. Acceptable Cab Manufacturers:
    a. G&R Elevator Co.
    b. Haunstein Burmeister
    c. Tyler

d. Columbia
e. Eklund

2.6 OPERATING FIXTURES

A. Car Operating Panel:

1. The operating panel in the car shall consist of a vandal resistant stainless steel control panel. (Taper all projected sides of car panel back to return panel for a neat appearance. Submit drawings for approval prior to fabrication.) The main control panel shall contain a series of push buttons with illuminated call registration devices, numbered to correspond to the various landings serviced. In Car Stop Switch, Fire Service Compartment, Alarm Button (connected to a bell located on the car) and a Door Close, Door Open button for each entrance. Alarm bell shall be operated from its own independent battery pack power supply and recharging system. The control panel shall also contain separate key operated switches for Access, Independent Service, Car Lights, Car Fan, Emergency Light and Test Switch. Emergency phone shall be hand free type. Panel shall also accommodate certificate frame, hand free phone and digital car position indicator. All key switch cylinders shall be standard Adams keying system.
2. Buttons shall be made of brushed stainless steel with LED for illumination, with translucent floor designations, with Braille.
3. Provide emergency light in car-operating panel with rechargeable nickel cadmium batteries and recharging system.
4. Provide engraved fire services instruction and security keys per ASME A17.1.
5. Acceptable Manufacturers: PTL-Performer series or Innovation Industries. All shall be vandal resistant and brailled
6. Floor Passing Chime:
   a. Provide a floor-passing chime and voice annunciation to meet ADA requirements. Mount in main car operating panel.
   b. Acceptable Manufacturer: Adams Voice or approved Elevator Controller Manufacturer
7. Refer to detail on drawings.

B. Hall push button:

1. ADA compliant vandal resistant illuminating LED type Hall push buttons shall be installed at each floor to permit waiting passengers to call the elevator to the floor.
2. Fixtures shall have up and down buttons with Braille adjacent to the button on the left at intermediate floors and single buttons at top and bottom floors.
3. Buttons shall be made of vandal resistant stainless steel and shall illuminate to indicate a call has been registered. Button shall remain illuminated until the call has been answered. Provide oversized vandal resistant brushed stainless steel cover plates at all push button stations to cover all openings (including the openings that result from removal of existing hall push button stations or any other devices). The Braille signage adjacent to the directional button requires at least half inch lettering denoting the direction of the button
4. Provide engraved graphic per

5. ASME A17.1 emergency sign and illustration on all hall push button station plates: "IN CASE OF FIRE USE STAIRWAY FOR EXIT". "DO NOT USE ELEVATOR"
6. Acceptable Manufacturers: PTL Performer Series or Innovation Industries.
7. Refer to details on drawing.
8. Hall push button panel may accommodate the hall position indicator (HPI).

C. Communication System (Telephone):

1. Provide hands-free vandal resistant emergency telephone in the car, with wiring (shielded pairs) to terminals on control panel in machine room. Engraved with ASME A17.1.
2. Phone shall keep working during power failure. Coordinate work with U-M ITCOM. Phone shall be one push button to talk type and flash when call is answered. Telephone shall be an integral part of the car panel.
3. Annunciator Interface, Auxiliary Relay and 24V LED Board: The board shall be mounted behind the phone in the elevator car operating panel which contains an auxiliary relay that can be tied to DDC panel. The connection from the elevator controller to the DDC panel shall be provided by electrical contractor. When the board is programmed correctly, DDC will receive an alarm whenever the RATH phone detects the phone line has failed. Note that the car traveling cable containing the phone line must be expanded to contain a pair of wires for connection to the nearest DDC panel.
4. Provide a RATH 2100-ALARM unit. Unit shall be mounted in the designated floor elevator lobby per elevator code ASME A17.1 as part of the egress floor hallway push button and shall be wired to the RATH phone in the car operating panel. The alarm unit will contain the code required local alarm light, sounder and a momentary key switch on a label back plate. The traveling cable containing the phone line and pair of wires for the DDC circuit must be expanded to contain a pair of wires from the RATH phone RATH alarm unit.
5. Manufacturer:
   a. RATH Microtech 2100-957-cc telephone (call track), with hand free operation or equivalent.
   b. RATH 2100 Alarm Unit or equivalent.

D. Car Traveling Lantern:

1. Provide on both sides of car doorjambs and shall be ADA compliant.
2. Manufacturer: PTL Performer series or Innovation Industries Vandal Resistant Series.
3. Refer to detail on drawings.

E. Car Fire Alarm Horn: (omitted)

F. Car Position Indicator:

1. A LED (Light Emitting Diode) vandal resistant digital type position indicator shall be provided inside car, as part of main car operating panel (COP). It shall indicate the floor at which the car is stopped or passing and the direction the car is traveling. The cover plates shall be #4, brushed Stainless Steel.
2. Manufacturer: PTL Performer Series or Innovation Industries Vandal Resistant Series.
3. Refer to detail on drawings.

USE SPECIAL KEY AS AN OPTION

G. Special Key Feature:

1. Provide (2) key switches per floor. One shall be for security on & off and one shall be for momentary override. Keys shall be keyed to U of M's KEY SYSTEM and shall be coordinated with KEY OFFICE through Owner Representative.

H. Hall Position Indicator:

1. Provide at each floor in elevator lobby or hallway, above hoistway door. Description shall be as in item 2.6.G or as part of the hallway push buttons and shall be LED digital type in red color.

2.7 ELECTRIC WIRING

A. Complete insulated wiring shall be furnished and installed to connect all parts of the equipment furnished by the elevator contractor. Wiring shall conform to the requirements of the latest edition of the National Electrical Code. Include rigid conduit or EMT, at least 1/2" diameter, and short lengths of flexible conduit. Conduit or EMT shall terminate in junction boxes. Conduit, EMT, wiring duct, conduit fittings, enclosures and junction boxes shall be galvanized steel or aluminum.

B. All wiring shall have a flame retarding moisture resisting outer cover and shall be run in metal conduit, flexible metallic tubing, or wire ducts.

C. Traveling cables shall have flame retarding and moisture resisting outer cover. They shall be flexible and suitably suspended to relieve strains in the individual conductors. Provide the required quantity plus at least 10 percent spares. All wiring between telephone in car and a junction box in elevator machine room shall be provided by the elevator contractor. Conductors shall be numbered to correspond to numbered terminals at the car and machine room.

D. Terminal blocks shall be coded to identify the circuits. Multi-conductor cables shall have the conductor color coded and numbered.

E. The elevator car shall be provided with a suitable GFCI duplex receptacle fitted with a wire lamp guard on top of the car and a suitable duplex plug receptacle.

F. Unless otherwise specified, control wiring shall be minimum size #18 AWG. Wire size shall be large enough so that the voltage drop under inrush conditions will not adversely affect operation of the controls.

G. Electrical Receptacle in Car: Provide GFCI duplex electrical receptacle in car. Locate receptacle approximately 2" above finished floor below car station. Provide matching face plate on receptacle

H. Execution:

1. Install all power wiring in raceway systems. No exposed wiring or conduit shall be run in finished areas without prior written approval of owner.
2. Splice cables and wires only in outlet boxes, junction boxes or pull boxes. (Note - No wire splicing allowed in raceway or wire ducts).
3. Install cable supports for all vertical feeders in accordance with the NEC. Provide Kellum GRIP type supports, which firmly clamp each individual cable and tighten due to cable weight.

I. All terminal strip connections shall be identified with corresponding reference numbers from cable termination chart and electrical straight-line diagrams.

PART 3 - EXECTION

3.1 ACCEPTABLE ELEVATOR INSTALLERS

A. Acceptable installers: Subject to compliance with the requirements specified herein, installers offering product approved by the owner are limited to the following listed companies. Elevator installer for project must provide the equipments as specified.

1. Detroit Elevator Co.
2. Kone Elevator Co.
3. Otis Elevator Co.
4. Schindler Elevator Inc.
5. Thyssen Krupp Elevator.

3.2 EXAMINATION

A. Inspect all surfaces, and required embedded anchorage devices, and verify that they are in proper condition to receive the work of this section. Verify that field measurements are as indicated on approved shop drawings.

1. Prior to preparation of drawings, the contractor shall examine the hoistway and machine room areas and verify that nothing will adversely effect the execution of the work.
2. No exposed wiring or conduit shall be run in finished areas without prior written approval of owner.

B. Beginning of installation means acceptance of existing conditions.

3.3 PERFORMANCE

A. Contract speed: Actual speed shall vary no more than +/- 5% from speed specified under any loading condition or direction of travel.

B. Leveling accuracy: Consistently level within +/- 1/4" under all loading conditions.

3.4 PERFORMANCE GUARANTEE

A. The elevator contractor shall assume full responsibility to furnish and provide a complete and functional elevator and to obtain and furnish the University final State Elevator Inspection approval. All costs necessary to correct code deficiencies cited by the State Elevator Inspector will be paid by the elevator contractor as part of this Contract at no additional cost to the Owner.

AS AN OPTION

3.5 ACCESSORIES

A. Car and/or hall operating key switches: Provide ground fault circuit-interrupter protection for car-top inspection station and in car electrical receptacle.

3.6 TECHNICAL TRAINING

A. On site technical training shall be held for the purpose of familiarizing Elevator Support Mechanics with operations and troubleshooting procedures. The session shall accommodate up to ten personnel in each session and consist of forty hours of Training (This to include two 2-day sessions and the fifth day reserved for any additional diagnostic training). Training on equipment controller shall be provided by trained factory service engineers of controller manufacturer through the elevator installers.

3.7 ELEVATOR ACCEPTANCE DEMONSTRATION AND PERFORMANCE TEST (COMMISSIONING BY U OF M ELEVATOR SHOP)

A. Demonstrate to Owner, or Owner's designated representative, the operation of the elevator system. Demonstration shall include:

1. Installation compliance with specifications.
2. Contract speed, capacity, and floor-to-floor performance compliance with specifications.
3. Stopping accuracy and car ride compliance with specifications.
4. Operation of signal fixtures and operation of supervisory or dispatching system.
5. Promptly remove all work rejected by the Engineer for failure to meet specifications and replace to comply with requirements, at no additional cost to the Owner. All expenses of repairing work of other Trades damaged by this replacement shall be borne by Contractor.
6. Rejected work which is not made good within a reasonable time, determined by the Engineer, may be corrected by the Owner at Contractor's expense.
7. Upon completion of installation and before final acceptance, conduct a running speed test with full design load to verify compliance with performance requirements. Also refer to Article 1.3 of this division

B. Operating Instructions: Provide instructions to the Owner's personnel, including safety procedures, proper operation of the equipment, and routine maintenance procedures.

C. The lap top computer shall be provided to commissioner prior to start of commissioning process by minimum of (2) weeks. See item 2.3.J.

3.8 CLEANUP

A. Keep work areas orderly and free of debris on a daily basis.

B. Remove filings and loose materials resulting from this work from hoistways.

C. Clean all dirt, oil and grease from machine room and pit equipment and floors.

D. Clean car, car enclosures, entrances, hoistways, operating and signal fixtures and trim of dirt, oil, grease, and finger marks.

E. Polish shine all stainless steel components.

F. Clean, re-align guide rails for car and paint the back guide rails.

END OF SECTION 14240

UNIVERSITY OF MICHIGAN
ARCHITECTURE, ENGINEERING AND CONSTRUCTION

ARCHITECTURE & ENGINEERING
326 East Hoover, Mail Stop B
Ann Arbor, MI 48109-1002
Phone: 734-764-3414
Fax: 734-936-3334

BuildingName
The Description of the Project
P00000000 0000

SPECIFICATION DIVISION 14

NUMBER SECTION DESCRIPTION

DIVISION 14 CONVEYING SYSTEMS
SECTION 144200 - WHEELCHAIR LIFT

END OF CONTENTS TABLE

DIVISION 14 CONVEYING SYSTEMS
SECTION 144200 - WHEELCHAIR LIFT

SPEC EDITOR: THIS SECTION INCLUDES WHEELCHAIR LIFTS, WHICH ARE DISTINGUISHED FROM BFLD'S, IN PART, BY RESTRICTED LIFT HEIGHT AND MINIMAL SHAFT ENCLOSURE REQUIREMENTS. CONSULT UNIVERSITY OF MICHIGAN DESIGN GUIDELINES FOR SELECTION ASSISTANCE TO DETERMINE WHETHER A WHEELCHAIR LIFT IS AN APPROPRIATE DESIGN SOLUTION, OR WHETHER ANOTHER LIFT TYPE SPECIFIED IN SECTION 14 ("BARRIER-FREE LIFTING DEVICE") IS REQUIRED.

PART 1 - GENERAL

1.1 RELATED DOCUMENTS

INCLUDE PARAGRAPH 1.1.A AND B IN EVERY SPECIFICATION SECTION. EDIT RELATED SECTIONS 1.1.B TO MAKE IT PROJECT SPECIFIC.

A. Drawings and general provisions of the Contract, Standard General and Supplementary General Conditions, Division 1 Specification Sections, and other applicable Specification Sections including the Related Sections listed below, apply to this Section.

1.2 SUMMARY

A. This Section specifies a vertical-travel wheelchair lift.

1. Include manufactured hoistway and platform doors.

SPEC EDITOR: SELECT PARAGRAPH ABOVE OR BELOW.

2. Install lift within site-built custom enclosure.

B. Electrical service and final electrical connections are specified in Division 26 sections.

SPEC EDITOR: INCLUDE THE FOLLOWING WHERE APPROPRIATE.

C. Alternates: The work of this Section affected by an alternate. Refer to Division 01 Section "Alternates" for additional information.

1.3 SUBMITTALS

A. Submit each indicated item in compliance with Division 1 Section "Submittals."

B. Product manufacturer's literature indicating compliance with applicable requirements.

C. Shop Drawings: Provide shop drawings showing layout, including critical dimensions for installation, details, and anchorages for wheelchair lift. Include internal wiring diagram and requirements for connection to building electrical service.

D. Samples: Submit finish paint color samples of manufacturer's full standard range of surface coating colors and textures in the form of actual coating material samples applied to metal sample cards of approximately 3 inches wide by 5 inches long.

E. Permits and Certificates: Submit four copies of each of the following:

1. Installation permit required under Quality Assurance Article.
2. Inspection and acceptance certificates required under Quality Assurance Article.

F. Manufacturer's Instructions: Submit operation and maintenance manuals and parts list.

1.4 QUALITY ASSURANCE

SPEC EDITOR: SPEC SHOULD USUALLY RETAIN ALL BELOW.

A. Installer Qualifications: Engage an experienced Installer who has completed installation of products similar in design and extent to those required for the project and whose work has resulted in construction with a record of successful in-service performance.

1. Installer shall hold a valid Class C license issued by the State of Michigan.

B. Single-Source Responsibility: Provide products and units from one source and produced by a single manufacturer.

C. Regulatory Requirements: As follows:

1. Comply with applicable provisions of the most recent edition (unless otherwise indicated) of each of following codes and standards:
   a. Americans with Disabilities Act, Uniform Federal Accessibility Standards (ADA/UFAS).
   b. ANSI 17.1 - 1993; with ANSI 17.1a - 1994 Addenda.
   c. Michigan Department of Labor Building Code Rules, Chapter 11 - Accessibility.
   d. Michigan Department of Labor "Elevator Laws and Rules" (Public Acts 227 of 1967 & 333 of 1976).
2. Factory-installed wiring shall comply with applicable requirements of the National Electrical Code.
3. Obtain installation permit from the State of Michigan Elevator Safety Board.
4. Obtain necessary inspection and acceptance certificates from authorities having jurisdiction.

1.5 PROJECT CONDITIONS

A. Field Measurements: Check actual space available by accurate field measurement before fabrication. Show recorded measurements on final shop drawings. Coordinate fabrication schedule with construction progress to avoid delay of work.

1. Where necessary, proceed with fabrication without field measurements, and coordinate fabrication tolerances to ensure proper fit of window units.

PART 2 - PRODUCTS

2.1 WHEELCHAIR LIFT

SPEC EDITOR: THE PARAGRAPH BELOW INCLUDES PROVISION OF A MAUNUFACTURED HOISTWAY ENCLOSURE. OMIT THE REFERENCES TO A "MANUFACTURED HOISTWAY ENCLOSURE"IN PARAGRAPHS A AND C IF THE UNIT WILL BE INSTALLED IN A SITE-BUILT CUSTOM ENCLOSURE.

A. Wheelchair Lift, General: Provide vertical-travel wheelchair lift with roped- (cable-) hydraulic-type lift mechanism, with single-chair capacity, and with manufactured hoistway enclosure. Wheelchair lift, hoistway, components, hardware, and operational features shall comply with requirements of this Section and requirements of authorities having jurisdiction.

B. Provide wheelchair lifts with the following characteristics:

1. Capacity: 750 lbs.
2. Rated Speed: 15 feet per minute max.
3. Vertical travel distance: As indicated on Drawing.
4. Platform size: 13 sq. ft. minimum area; meet minimum length and width requirements of authorities having jurisdiction.
5. Power Supply: 115V, single phase, or as required by manufacturer.
6. Emergency Operation: Rechargeable battery operated system, capable of completing a full up and down cycle.

C. Product: Subject to compliance with requirements, provide the following product:

SPEC EDITOR: SELECT ONE OF THE FOLLOWING PARAGRAPHS BASED ON THE SPECIFIC PROJECT.

1. Wheelchair lift with manufactured enclosure:
   P.A.L-SE; Concord, Div. Ricon Corporation.
2. Wheelchair lift for use with architectural enclosure:
   Concord, Div. Ricon Corporation.

2.2 COMPONENTS

A. Doors: In addition to complying with regulatory requirements, provide doors that are self-closing, swinging type fabricated with internal noise deadening materials and with rubber bumper stops to prevent metal-to-metal contact with jambs. Provide doors with hydraulic door closers (spring hinges not permitted).

1. Provide doors with manufacturer's standard safety glazed lights (windows). Provide lights of not less than 625 sq. inches in each door.

B. Seat: Side-mounted, spring loaded seat that in retracted position does not impinge on the required clear width of the platform.

C. Controls: Constant pressure paddle type.

D. Platform entrance safety device: Photo-electric eye.

E. Handrails: Provide guards on both sides of platform with handrails.

F. Fused Safety-Disconnect: Provide unit in accordance with requirements of authorities having jurisdiction. Locate unit as indicated in Installation article of this Section.

2.3 FINISH

A. Paint Coating: Manufacturer's standard powder-coated enamel finish. Color to be selected by Architect from manufacture's standard range.

PART 3 - EXECUTION

3.1 INSPECTION

A. Inspect surrounding wall and floor surfaces before beginning installation. Verify that rough opening tolerances are correct and the landing construction is level. Do not proceed with installation until deficiencies have been corrected.

SPEC EDITOR: DELETE BELOW IF NO DEPRESSED SLABS.

1. Verify that depressed slab area dimensions are correct.

3.2 INSTALLATION

A. Comply with manufacturer's printed installation instructions for products and applications indicated, except where more stringent requirements apply. Comply with applicable requirements of authorities having jurisdiction, and the following:

1. Securely fasten lifting structures to the structural floor using expansion anchors or similar devices.
2. Field alteration of factory-fabricated structural elements, including platform and doors is not permitted.
3. Locate fused safety-disconnect as indicated on Drawings, or if not indicated, in a location near the lift mechanism, but not in the hoistway and not in location accessible to the public.

3.3 ADJUSTING

A. Test and adjust operation of wheelchair lift. Verify, and adjust as required, indicated dimensional tolerances related to enclosure and platform, and landing and platform. Ensure smooth, non-binding operation of platform, doors and other moving parts and assemblies. Ensure proper operation of safety devices and related interlocks. Adjust limit switches to ensure proper alignment with landings.

3.4 CLEANING

A. Clean surface finishes promptly after installation of unit. Lubricate hardware and other moving parts.

3.5 TRAINING

A. Training: Demonstrate proper operation to Owner's personnel. Provide not less than 4 hours of training, by a qualified manufacturer's technician, for Owner's personnel in the proper operation and maintenance of the wheelchair lift.

END OF SECTION 144200

UNIVERSITY OF MICHIGAN
ARCHITECTURE, ENGINEERING AND CONSTRUCTION

ARCHITECTURE & ENGINEERING
326 East Hoover, Mail Stop B
Ann Arbor, MI 48109-1002
Phone: 734-764-3414
Fax: 734-936-3334

BuildingName
The Description of the Project
P00000000 0000

SPECIFICATION DIVISION 14

NUMBER SECTION DESCRIPTION

DIVISION 14 CONVEYING SYSTEMS
SECTION 146000 - HOISTS AND CRANES

END OF CONTENTS TABLE

DIVISION 14 CONVEYING SYSTEMS
SECTION 146000 - HOISTS AND CRANES

SPEC EDITOR: THIS MASTER SPECIFICATION IS OLD. RECHECK AND VERIFY MANUFACTURERS, PRODUCTS & MODEL NUMBERS BEFORE USE.

PART 1 - GENERAL

1.1 RELATED DOCUMENTS

INCLUDE PARAGRAPH 1.1.A AND B IN EVERY SPECIFICATION SECTION. EDIT RELATED SECTIONS 1.1.B TO MAKE IT PROJECT SPECIFIC.

A. Drawings and general provisions of the Contract, Standard General and Supplementary General Conditions, Division 1 Specification Sections, and other applicable Specification Sections including the Related Sections listed below, apply to this Section.

1.2 SUMMARY

A. Extent of hoist and crane equipment is indicated on drawings.

B. Types of hoist and crane equipment includes the following:

1. Trolley hoist.
2. Bridge crane end trucks.

C. Hoist rails and bridge crane end tracks are included in Division 5 Section "Structural Steel".

1.3 SUBMITTALS

A. Product Literature: Submit manufacturer's product literature indicating compliance with specified requirements for each unit.

B. Shop Drawings: Submit shop drawings indicating assembly requirements and dimensions for coordination.

1.4 QUALITY ASSURANCE

A. Standards: Comply with ANSI B30.16 fabrication requirements.

1.5 DELIVERY STORAGE AND HANDLING

A. Coordinate delivery and installation of bridge crane end trucks and hoists with supporting steel to prevent delays.

PART 2 - PRODUCTS

2.1 TROLLEY HOISTS

A. Provide army-type trolley hoists, manually operated with hand hoist and geared trolley. Equip units with chain and hook, cushioned stop fittings for end of travel at both ends of rail, and as follows:

1. Capacity: 1000 pounds.

B. Manufacturer/Model: Acco Industries, model no. 1510090, or equivalent products of Chester Hoist, Inc.; Duff-Norton (Coffing); or Columbus Mckinnon Corp.

2.2 BRIDGE CRANE END TRUCKS

A. Provide kits for underhung girder bridge crane, including manually operated (push-pull) end trucks and accessories. Equip units with cushioned stop fittings for end of travel at both ends of runway beams, and as follows:

1. Capacity: 1000 pounds.

B. Manufacturer/Model: Acco Industries, model no. 521, or equivalent products of Chester Hoist, Inc.; Duff-Norton (Coffing); or Columbus Mckinnon Corp.

PART 3 - EXECUTION

3.1 INSPECTION

A. Examine structural steel supports in presence of Installer before installation of end truck and hoist units. Correct conditions deleterious to operation of units prior to installation.

3.2 INSTALLATION

A. Install end trucks and hoists in accordance with manufacturer's recommendations.

3.3 CLEANING AND ADJUSTMENT

A. Test units for proper operation. Repair malfunctioning equipment.

B. Clean and protect units from dust, dirt, and damage caused by subsequent construction operations. Replace damaged units that cannot be repaired to original condition.

C. Use of hoisting equipment of this Section for construction operations is not permitted.

END OF SECTION 14600

OUT TO BID

DESIGN GUIDELINES

1.0 CODES AND REGULATORY AGENCIES

2.0 PROJECT PROCEDURES

3.0 SUSTAINABILITY

4.0 SPECIAL INSTRUCTIONS TO DESIGNERS

5.0 SPECIAL BUILDING AREAS

6.0 TECHNICAL REQUIREMENTS

7.0 MASTER SPECIFICATIONS

7.1 ARCHITECTURAL

7.2 MECHANICAL

7.3 ELECTRICAL

7.4 SITE/CIVIL

8.0 PREFERRED MANUFACTURERS LIST

9.0 STANDARD DETAILS AND SCHEDULES

10.0 CHANGES TO DESIGN GUIDELINES

7.2 MECHANICAL

		Last Revision	Replaces Section
Division 21 Fire Suppression			
213113 Fire Pumps	W	December 2012	15320
211313 Wet and Dry Pipe Sprinkler Systems	W	August 2016	15300
Division 22 Plumbing			
220500 Common Work Results for Mechanical	W	August 2017	15010
220513 Motors	W	October 2016	15170
220514 Variable Frequency Drives	W	January 2013	15960
220516 Pipe Expansion Joints	W	January 2014	15125
220519 Thermometers, Pressure Gauges & Accessories	W	January 2014	15130
220523 Valves	W	January 2018	15100
220533 Heat Tracing for Piping	W	December 2012	15128
220548 Vibration Control	W	February 2017	15240
220553 Mechanical Identification	W	October 2017	15190
220719 Mechanical Systems Insulation	W	December 2012	15250
221113 Piping Materials & Methods	W	February 2107	15060
221119 Domestic Water Piping Specialties	W	June 2015	15411
221123 Domestic Water Booster Pumps	W	January 2014	15412
221319 Drainage Specialties	W	December 2012	15420
221333 Packaged Submersible Storm and Sanitary	W	December 2012	

Pumps			
221500 Compressed Air Accessories	W	December 2012	15481
223116 Water Softener	W	January 2014	15455
224200 Plumbing Fixtures	W	January 2014	15440
226313 Medical Gas Certification (Hospital Projects)	W	December 2016	15482
Division 23 HV AC			
230593 Testing Adjusting & Balancing (TAB)	W	August 2017	15990
230900 Mechanical Systems Controls	W	June 2016	15975
230905 Mechanical Systems Controls (Hospital Projects)	W	May 2017	
230910 VAV/Combination Sash Fume Hood Laboratory Controls-DDC	W	September 2016	15912
230920 Lab Terminal Air Flow Units & Controls	W	June 2015	15910
230930 Refrigerant Detection & Alarm	W	August 2015	15635
231113 Fuel Oil Systems	W	December 2012	15483
231123 Facility Natural Gas Piping	W	December 2012	15488
232116 Hydronic Piping Specialties	W	January 2017	15515
232123 Plumbing and Hydronic Pumps	W	October 2016	15160
232216 Steam & Condensate Piping Specialties	W	December 2012	15525
232300 Refrigerant Piping	W	December 2012	15530
232513 Chemical Water Treatment – Closed Loop	W	September 2017	15189
232516 – Chemical Water Treatment – Open Loop Systems	W	September 2017	
232519 Steam Boiler Chemical Water Treatment	W	December 2012	15188
233100 HVAC Ducts & Casings	W	October 2015	15890
233300 Air Duct Accessories & RGDs	W	February 2013	15895
233400 Fans	W	October 2013	15870
233600 Air Terminal Units	W	June 2016	15896
234000 HVAC Air Cleaning Devices	W	December 2012	15885
235100 Breechings, Chimneys & Stacks	W	December 2012	15575
235239 Fire Tube Boilers (Hot Water)	W	December 2012	15557
235240 Fire Tube Boilers (Steam)	W	December 2012	15558

235300 Heating Boiler Feed Water & Blow-down Equip	W	December 2012	15559
235716 Steam-To-Water Heat Exchangers	W	December 2014	
235719 Plate Type Liquid to Liquid Heat Exchanger	W	January 2014	
236416 Centrifugal Water Chillers	W	February 2013	15684
236500 Cooling Towers	W	March 2013	15710
237213 Rotary Air-to-Air Energy Recovery Wheels	W	December 2016	
237323 Custom Air Handling Units	W	October 2015	15854
237324 Semi-Custom Air Handling Units	W	November 2015	15855
238216 Coils and Drain Pans	W	November 2015	15820
238219 Floor Mounted Fan Coil Units (Un-ducted)	W	October 2015	15763
238220 Horizontal Fan Coil Units	W	December 2012	15764
238221 Blower Coil Units	W	December 2012	15765
238413 Steam Humidifiers	W	December 2012	15810

© 2018 Regents of the University of Michigan
Design by Michigan Creative
326 East Hoover, Ann Arbor, MI 48109-1002
Phone: (734) 763-3020
Contact Us

UNIVERSITY OF MICHIGAN
ARCHITECTURE, ENGINEERING AND CONSTRUCTION

ARCHITECTURE & ENGINEERING
326 East Hoover, Mail Stop B
Ann Arbor, MI 48109-1002
Phone: 734-764-3414
Fax: 734-936-3334

BuildingName
The Description of the Project
P00000000 0000

SPECIFICATION DIVISION 21

NUMBER SECTION DESCRIPTION

DIVISION 21 FIRE SUPPRESSION
SECTION 211313 - WET AND DRY PIPE SPRINKLER SYSTEMS

END OF CONTENTS TABLE

DIVISION 21 FIRE SUPPRESSION
SECTION 211313 – WET AND DRY PIPE SPRINKLER SYSTEMS

REVISIONS:

AUGUST 2016: REVISED TO ELIMINATE GALVANIZED PIPE AND FITTINGS FOR DRY PIPE SYSTEMS. D. KARLE PER FP/PLMG MTT.

AUGUST 2015: REVISE SPRINKLER HEAD MFR. FROM ANVIL TO TYCO TO REFLECT CORRECT MFR., PER B. BEGG/D. KING. D. KARLE.

APRIL 2015: REVISED TO SPECIFY FOR DRY PIPE SYSTEMS: MATERIAL TO BE SCH. 40 GALV. STEEL PIPE AND FITTINGS, INSTALL PIPE WITH WELD SEAM ABOVE HORIZONTAL CENTERLINE OF PIPE, DRAIN VALVES TO BE INSTALLED AT ALL LOW POINTS, ALL DRY PIPE PIPING TO BE PITCHED. ADDED SPEC FOR DRY PIPE VALVE. KARLE FOR FP/PLMG MTT.

SPEC EDITOR: IN ORDER FOR THE CONTRACTOR TO HYDRAULICALLY DESIGN SPRINKLER PIPING, BID DOCUMENTS MUST INCLUDE TEST DATA INCORPORATING THE LATEST FLOW TEST CONDUCTED BY FACTORY MUTUAL, FIRE PUMP LOCATION, LATEST FIRE PUMP TEST DATA, HYDRAULIC CALCULATIONS (IF AVAILABLE), AND AS-BUILT INFORMATION.

SPEC EDITOR: PRIOR TO ISSUING FIRE PROTECTION DRAWINGS FOR BID, THEY SHOULD BE SENT TO, REVIEWED AND APPROVED BY FACTORY MUTUAL.

SPEC EDITOR: FOR CLASSROOM BUILDINGS, PROJECT LEAD SHOULD SEND DRAWINGS TO STATE FIRE MARSHAL DURING SR. REVIEW, VIA DOUG KOEPSELL.

PART 1 - GENERAL

1.1 RELATED DOCUMENTS

INCLUDE PARAGRAPH 1.1.A AND B IN EVERY SPECIFICATION SECTION. EDIT RELATED SECTIONS 1.1.B TO MAKE IT PROJECT SPECIFIC.

A. Drawings and general provisions of the Contract, Standard General and Supplementary General Conditions, Division 1 Specification Sections, and other applicable Specification Sections including the Related Sections listed below, apply to this Section.

B. Related Sections

1. Section 220500 - Common Work Results for Mechanical
2. Section 221113 – Piping Materials and Methods

1.2 SCOPE OF WORK:

A. Provide piping, fittings, valves and specialties for automatic wet and dry sprinkler systems.

SPEC EDITOR: STANDPIPE SYSTEMS ARE TYPICALLY ONLY INCLUDED FOR BUILDINGS OF FIVE OR MORE STORIES.

B. Provide piping, fittings, valves and specialties for standpipe systems.

C. All wiring related to 211313 is covered under Division 26.

1.3 DRAWINGS:

A. Deviations from the drawings, with the exception of minor changes in routing and other such incidental changes that do not affect the functioning or serviceability of the system, shall not be made without the written approval of the architect-engineer, and re-submitted to FM and the authority having jurisdiction for approval.

1.4 QUALITY ASSURANCE:

A. Materials, installation and testing shall comply with the following:

1. NFPA 13 - Installation of Sprinkler Systems.
2. FM - Factory Mutual Approval Guide.
3. NFPA 14 - Installation of Standpipe and Hose Systems.
4. UL - Fire protection Equipment Directory.
5. FM - Data Sheets.
6. City of Ann Arbor requirements.

B. Equipment and Components shall bear UL and FM label or marking and shall be FM approved for fire service.

1.5 SUBMITTALS:

A. Submit data, drawings, and hydraulic calculations, as specified in Division 01.

SPEC EDITOR: SELECT ONE OF THE FOLLOWING:

B. For Buildings Containing Classroom: Submit shop drawings to Factory Mutual for approval first. Then, submit FM approved shop drawings to State Office of Fire Safety for approval. Submit shop drawings bearing stamp of FM and OFS form 12A from State Office Of Fire Safety to the architect/ engineer for approval.

C. For Non Classroom Buildings: Submit shop drawings to Factory Mutual for approval prior to submitting to the architect/ engineer. Submit shop drawings bearing stamp of FM to the architect/ engineer for approval.

1.6 HYDRAULIC DESIGN CRITERIA:

A. Locate mains and risers as indicated. Size piping per drawings, where indicated.

B. Hydraulic calculations shall be per NFPA and FM requirements.

C. Use latest FM water test to ascertain water supply parameters.

D. Density shall be as indicated (gallons/minute /square foot, gpm/sf). Size all piping to suit densities indicated below:

1. Offices: Density of 0.15 gpm/sf over the most remote 2000 sq. ft. area, 168 sq. ft. per head maximum.

2. Laboratories: Density of 0.18 gpm/sf over the most remote 2500 sq. ft., 130 sq. ft. per head maximum.
3. Mechanical rooms: Density of 0.18 gpm/sf over the most remote 2500 sq. ft., 130 sq. ft. per head maximum.

SPEC EDITOR: REVIEW STORAGE ROOMS WITH FM, AND CUSTOMIZE CRITERIA ACCORDINGLY. GENERALLY CRITERIA IS THE SAME AS FOR MECHANICAL ROOMS.

4. Storage Rooms:
5. Other rooms: Same as offices.

E. Include 250 gpm hose stream allowance at the floor of calculation.

F. Provide inspector's test connections per NFPA 13 and FM Data Sheets. Locate as indicated on the drawings.

G. Provide fire protection for soffit areas, void spaces, obstructions, top and bottom of ductwork above 4' wide, closets, and other spaces required by authority having jurisdiction, and at no additional cost to owner.

1.7 EXTRA MATERIALS:

A. For projects requiring more than 30 sprinkler heads, provide extra sprinkler heads with metal cabinet and head wrench, per NFPA 13 and FM Data Sheets.

1.8 IMPAIRING FIRE PROTECTION SYSTEM:

A. The University of Michigan Fire Alarm Shop shall impair existing fire protection system. Notify Fire Alarm Shop a minimum of 48 hours prior to required shutdown.

B. Plan and coordinate work to minimize period of time which the system is impaired.

C. In general, reactivate system at the end of each workday, under the supervision of the Fire Alarm Shop. System may be left impaired overnight only if explicitly authorized by the University and if contractor provides continuous fire watch in impaired areas.

PART 2 - PRODUCTS

2.1 GENERAL:

SPEC EDITOR: TOM TO CHECK ON FOLLOWING:

A. All hose threads shall be National Standard.

B. Pressure gauges: Liquid filled 6” dial, 0 to 150 psig range, 5 psig division, with gauge cock.
Manufacturers: Trerice Series 600, Weiss or Marsh

C. All piping materials of a given type shall be manufactured by a single source, and supplied by a single supplier.

2.2 ABOVE GROUND PIPING MATERIAL:

SPEC EDITOR: THIS SPEC IS FOR SYSTEMS WITH MAXIMUM REQUIRED OPERATING PRESSURE OF 175 PSIG. REVISE TO SUIT NEEDS FOR HIGH-RISE BUILDINGS.

A. Wet Pipe Systems: Schedule 40, ASTM A53, black steel pipe with screwed cast iron or malleable iron fittings (or match existing fittings in building) for sizes through 2”, and schedule 10, ASTM A135, black steel pipe with grooved couplings for sizes 2-1/2” and larger.

B. Dry Pipe Systems: Schedule 40, ASTM A53, black steel pipe for all pipe sizes, with screwed cast or malleable iron fittings for sizes through 2”, and grooved couplings for sizes 2- 1/2” and larger.

C. All piping, fittings and accessories shall be rated for a minimum working pressure of 175 psig.

D. Manufacturers: Victaulic Style 005 Rigid Firelock couplings with type "E" EPDM gasket, Tyco Grinnell.

E. Pipe Hangers: Pipe hangers shall comply with requirements of related sections, be FM approved, and be spaced in accordance with NFPA 13 and FM.

SPEC EDITOR: FOR SYSTEMS OVER 175 PSIG, RESOLVE SYSTEM APPROACH WITH FM AND CUSTOMIZE SPECIFICATION ACCORDINGLY.

F. For systems rated over 175 psig:

2.3 ABOVEGROUND ISOLATION VALVES:

A. General: Provide where shown on drawings, and as required, with valve monitor switch, and means of padlocking open.

B. Isolation valves 2-1/2" and larger: butterfly valve.
Manufacturers: Victaulic Series 708, Tyco Grinnell.

C. Isolation valves 2" and smaller: gate or ball valve, brass body.
Manufacturers: Victaulic Series 727, Tyco Grinnell

D. OS&Y type: Where specifically indicated on drawings, provide OS&Y type valves.
Manufacturers: Kennedy Figure 4068 (AWWA) or any other approved by the City of Ann Arbor Utilities Department Requirements, pages WM-1 & 2.

E. Valve monitor switch: Isolation valves shall be supervised open. Provide 115 volt, single pole, double throw roller type monitor switch to signal valve closing.
Manufacturers: Tyco Grinnell, Anvil, Notifier

2.4 SPRINKLER HEADS:

SPEC EDITOR: INDICATE TYPE OF HEAD ON PLANS. 286F LINKAGE MAY BE REQUIRED IN CERTAIN AREAS.

A. General: Provide brass sprinkler heads with wide angle spray, thermosensitive glass bulb with temperature rating of 155F to 165F, rated for 175 psig, standard response and orifice, except as otherwise specified, FM and UL approved. Install sprinkler head type as indicated on drawings.

B. Sprinkler head guards: Provide red, wire mesh guards where damage to sprinkler heads may occur, such as stairways, loading docks or aisles. Manufacturers: same as sprinkler manufacturer.

C. Semi-recessed pendant type: chrome plated brass, with chrome plated brass semi-recessed escutcheon.
Manufacturers: Reliable model G, Tyco, Viking model M.

D. Concealed pendant type: brass finish with cover to match ceiling.
Manufacturers: Reliable model G4FR, Tyco, Viking

E. Upright type: brass finish.
Manufacturers: Reliable model G, Tyco, Viking

F. Sidewall type: chrome plated brass, with deflector and chrome plated brass escutcheon.
Manufacturers: Reliable HSW1, Tyco, Viking

G. Dry type (freezeproof): recessed with center strut, lever and solder capsule, unobstructed waterway.
Manufacturers: Tyco, Reliable Model G3, Viking

2.5 TEST CONNECTIONS:

A. Inspector's Test Connection: Provide per NFPA 13 4-7.4.2, and where indicated on drawings: minimum 1 inch piping and test valve, orifice equivalent to one sprinkler head, with chain and cap. Drain to sanitary waste or as indicated on drawings.
Manufacturers: Elkhart, Victaulic, Test Master

DESIGNER: DRAIN MUST BE ABLE TO HANDLE FULL FLOW OF INSPECTOR'S TEST. USE A 3" DRAIN OR EQUAL FOR 1" LINE. ROUTE TO A JANITORS CLOSET IF POSSIBLE.

B. Zone Test and Drain Connection: Provide per detail on drawings and NFPA 13 4-7.4.2. Integrated test and drain valve assembly is acceptable.
Manufacturer: AGF Model 1000

2.6 FIRE PUMP TEST CONNECTIONS (HEADER):

SPEC EDITOR: CUSTOMIZE DETAIL TO HAVE APPROPRIATE NUMBER OF CONNECTIONS SHOWN, DEPENDING ON FIRE PUMP CAPACITY.

A. Provide test connection per detail and NFPA 13 4-7.4.2. Cast brass body with end inlet, brass plate lettered PUMP TEST CONNECTION, with loose bonnets, 3-inch female NPT inlet x 2-1/2 inch male hose thread outlets to match local fire department connections. Provide cap and chain for each bonnet. Nipple connection between flush inlet body connection and snoot (exterior connections) shall be chrome-plated steel.
Manufacturers: Potter-Roemer Inc., 5800 series, Elkhart Brass Mfg. Co., W.D. Allen Mfg. Co.

2.7 FIRE DEPARTMENT CONNECTION (SIAMESE):

A. Cast brass or bronze, flush wall mounted escutcheon plate type with polished brass finish, two 2-1/2 inch fire department inlets to match local fire department connections, double clapper check valves, lug caps and chains and cast-in function lettering.
Manufacturers: Elkhart Brass Mfg. Co., No. 166, Potter-Roemer Inc., No. 5020 Series, Seco Mfg. Inc., No. 261, W.D. Allen Mfg. Co., No. 276

2.8 ROOF FIRE DEPARTMENT CONNECTION:

SPEC EDITOR: DELETE IN SHORT SPEC; TOM WILL RESEARCH FURTHER

A. Cast brass body with 4 inch NPT inlet and two (2), 2-1/2 inch NPT outlets to match local fire department connections. Provide 2-1/2 inch cast brass straight globe valve with red hand wheel. Valve shall have female NPT inlet x male hose thread outlet, rated for 300 psig. Provide cast-in function lettering.
Manufacturers: Elkhart Brass Mfg. Co., Potter-Roemer Inc., Model No. 5875 outlet with model 4115 valve, W.D. Allen Mfg. Co.

2.9 DETECTOR CHECK VALVE:

INCLUDE U-M STANDARD DETAIL "15300 001 - Fire Service System Detail", REVISED AS REQUIRED TO MAKE PROJECT SPECIFIC.

THIS IS USED TO MECHANICALLY DETECT SMALL VOLUMES OF WATER THAT PASS THROUGH THE FIRE PROTECTION MAIN. IT DOES NOT PROVIDE PROTECTION OF THE POTABLE WATER FROM POSSIBLE CONTAMINANTS IN THE FIRE PROTECTION SYSTEM. ASSEMBLY DOES NOT CONNECT TO THE FIRE ALARM SYSTEM.

A. Provide valve assembly, including flanged detector check valve and bypass line. Detector check valve shall have galvanized or epoxy coated cast iron body, bronze clapper with resilient seal. Bypass line shall include City of Ann Arbor meter, isolation valves and check valve.

B. Manufacturer: Ames 1000DCV or model 3000, Victaulic.

2.10 FIRE DEPARTMENT HYDRANT VALVE:

SPEC EDITOR: DELETE IN SHORT SPEC

A. Cast brass back outlet body with 4 inch NPT inlet and two (2) 2-1/2 inch male NPT outlets to match local fire department connection. Provide caps and chains and cast brass round wall plate lettered HYDRANT.

B. Provide NRS gate valve with polished brass 7 inch plate lettered HYDRANT VALVE CONTROL with threaded 1-1/2 inch NPT lock nut, 30 inch long x 7/8 inch square steel extension rod with coupling for attachment to stem of gate valve.

C. Manufacturers: Potter-Roemer Inc., Model No. 5840, Elkhart Brass Mfg. Co., W.D. Allen Mfg. Co.

2.11 DRAIN VALVE:

A. Provide a brass ball valve, with hose thread outlet, and cap. Riser drains shall be 3/4" ball valve with hose thread outlet, and cap, unless otherwise noted on drawings.
Manufacturers: Victaulic Series 727, Tyco Grinnell, Anvil

DESIGNER: PIPE TO DRAIN CAPABLE OF TAKING FULL FLOW.

2.12 FIRE DEPARTMENT VALVE:

SPEC EDITOR: TYPICALLY USED IN STANDPIPE SYSTEMS

A. Provide 2-1/2" cast brass straight globe valve with red hand wheel, female NPT inlet and 2 1/2" male hose thread outlet with cap, rated for 300 psig. Fire department valve shall meet local fire department standards. Provide with pressure restricting valve as required. Identify with words "FIRE DEPARTMENT VALVE" per NFPA requirements and the authorities having jurisdiction.
Manufacturers: Potter-Roemer Inc., Model 4115, Elkhart Brass Mfg. Co., W.D. Allen Mfg. Co.

2.13 ISOLATION, DRAIN AND TEST VALVES SIGNS:

A. Provide permanent plastic or metal 6" x 6" signs for all isolation, drain and test valves describing purpose and location.
Manufacturer: Seton, Bramer

2.14 FLOW ALARM SWITCH:

A. Provide flow alarm switches where indicated and as detailed on the drawings.

SPEC EDITOR: CHECK CATALOG ON PSI RATING 300?

B. Each water flow switch shall be equipped with an adjustable recycling type retarding device designed to prevent false alarms due to pressure surges within the piping. The flow switch piping shall be suitable for 175 psig working pressures.

C. Each flow alarm shall be provided with a set of contacts rated for 115V for connection by Electrical Trades.

D. Manufacturer: Viking VSR-D, Reliable, Notifier, Victaulic, Anvil,

2.15 JOCKEY PUMP AND CONTROLLER:

A. Provide jockey pump and controller package as detailed on drawings, including 1/3 HP, 115V motor, 1.6 gpm, 100 psig pump.

SPEC TEAM: NEED TO CHECK FOR MANUFACTURER

B. Manufacturer/Supplier: Grundfos/Underwood Fire Equipment

2.16 PRESSURE RESTRICTING VALVE:

SPEC EDITOR: FIRE HOSES ARE NOT GENERALLY USED. BUT IF HOSES ARE USED, PRESSURE MUST BE LESS THAN 100 PSIG.

A. Provide pressure-restricting valve on bottom of rack nipple or on male side of fire department valve to restrict water pressure at hose line. Valve shall be 1 1/2" swivel inlet with pin lugs X male outlet, cast brass. A removable breakable link shall permit adjustment of restriction.
Manufacturer: Crocker Model 5370-5375, Powhattan 16-255.

2.17 FIRE PUMP PRESSURE RELIEF VALVE:

SPEC EDITOR: THIS PRESSURE RELIEF VALVE IS REQUIRED WHEN FIRE PUMP CAN DEVELOP SHUT-OFF HEAD MORE THAN SYSTEM IS RATED FOR - TYPICALLY 175 PSIG.

DESIGNER: PIPE TO DRAIN.

A. Provide UL and FM approved fire pump pressure relief valve: cast iron globe or angle valve body, bronze seat, Teflon coated stainless steel trim, hydraulically operated, cast bronze direct acting pilot control with stainless steel trim, adjustable spring loaded diaphragm. Relief pressure range factory set at 175 psig, adjustable 20 to 200 psig. Manufacturer: Claval 50B-4KG-1, size 6"

CAUTION: THE BELOW DRY PIPE SPECIFICATION WAS EXTRACTED FROM AIA MASTER SPEC, REQUIRES REVIEW AND EDIT AS REQUIRED TO MAKE PROJECT SPECIFIC. MAY NOT BE COMPLETE.

2.18 DRY PIPE VALVE AND ACCESSORIES:

A. Provide dry pipe valve and all required trim and accessories including air maintenance device, air compressor, and accelerator device. Provide all UL listed and FM approved components with a rated minimum pressure of 175 or 300 PSIG to match system pressure rating.

B. Valve: UL 260 differential-pressure type, cast or ductile iron, with flanged or grooved end connections. Include UL 1486, quick-opening device/accelerator, galvanized trim sets for air supply, drain, priming level, alarm connections, ball drip valves, pressure gages, priming chamber attachment, and fill-line attachment.

C. Automatic device to maintain minimum air pressure in piping: shall include shutoff valves to permit servicing without shutting down sprinkler piping, bypass valve for quick filling, pressure regulator or switch to maintain pressure, strainer, with adjustable range.

D. Air compressor: 120-V ac, 60 Hz, single phase.

E. Approved Manufacturers: Viking, Reliable, Tyco, Victaulic

PART 3 - EXECUTION

3.1 GENERAL PIPING INSTALLATION REQUIREMENTS:

A. Install piping in compliance with Section 221113, Article 3.1, with hanger spacing as dictated by NFPA and FM.

B. Flush per NFPA 13 and FM requirements.

C. Sleeve all piping passing through walls, floors and partitions per details and Section 220500.

3.2 DRY PIPE SYSTEMS

A. Install all piping with the longitudinal weld seam located above the horizontal centerline of the pipe.

B. Provide auxiliary drain valves terminated with a nipple and cap in all trapped sections of pipe, regardless of volume trapped. Drain valve size shall be per NFPA 13. Provide signage required by NFPA 13 at dry pipe or preaction valve indicating the number of low point drains and the location of each individual drain.

C. Mains and branch lines shall be pitched to drain at least $^1/_2$ in. per 10 ft in all locations, including non-refrigerated areas and areas not subject to freezing.

3.3 VALVE AND SPECIALTY INSTALLATION REQUIREMENTS:

A. Inspector's Test Connections: Install where indicated, and if not indicated, at end of most hydraulically remote point for each zone.

B. Isolation/ Control valves: Locate where readily accessible in emergency situations - in stairwells max 7' a.f.f.

C. Drain Valves: Provide downstream of each flow alarm to facilitate testing, at low points trapping more than 5 gallons of water, at base of each riser. Provide metal air gap fittings for connection to the underground drainage system. Drain must be capable of taking full flow.

D. Fire Department Connections: Locate with sufficient clearance from obstructions to allow full swing of fire department wrench handle.

E. Pressure Gauges: Provide, with petcock valve, at the top of each standpipe, in readily visible location.

3.4 SPRINKLER HEAD INSTALLATION REQUIRMENTS:

A. Locate heads per drawings, FM and NFPA 13, coordinated with lighting, building equipment layout, and other interferences. Aesthetically locate heads with respect to ceiling patterns, tile patterns, masonry bonds and similar constructions lines. Center heads in two directions in ceiling tile, with piping offsets as required.

B. Protect heads, covers and escutcheons prior to painting. Remove protection after painting.

3.5 FIELD QUALITY CONTROL AND TESTING:

A. Test equipment per the manufacturer's instructions, NFPA, and FM.

B. Test piping systems per NFPA 13 and the requirements of Factory Mutual.

END OF SECTION 211313

UNIVERSITY OF MICHIGAN
ARCHITECTURE, ENGINEERING AND CONSTRUCTION

ARCHITECTURE & ENGINEERING
326 East Hoover, Mail Stop B
Ann Arbor, MI 48109-1002
Phone: 734-764-3414
Fax: 734-936-3334

BuildingName
The Description of the Project
P00000000 0000

SPECIFICATION DIVISION 21

NUMBER SECTION DESCRIPTION

DIVISION 21 FIRE SUPPRESSION
SECTION 213113 - FIRE PUMPS

END OF CONTENTS TABLE

DIVISION 21 FIRE SUPPRESSION
SECTION 213113 - FIRE PUMPS

REVISIONS:
07-30-07: ELCTRICAL CHANGES PER KEN BIRRINGER.

PART 1 - GENERAL

1.1 RELATED DOCUMENTS

INCLUDE PARAGRAPH 1.1.A AND B IN EVERY SPECIFICATION SECTION. EDIT RELATED SECTIONS 1.1.B TO MAKE IT PROJECT SPECIFIC.

A. Drawings and general provisions of the Contract, Standard General and Supplementary General Conditions, Division 1 Specification Sections, and other applicable Specification Sections including the Related Sections listed below, apply to this Section.

1.2 SCOPE OF WORK:

A. Provide a complete UL listed, FM approved, fire pump, jockey pump, and pump controllers as specified, detailed, and scheduled, meeting all of the applicable NFPA requirements.

1.3 QUALITY ASSURANCE:

A. Provide listing/approval stamp, label, or other marking on equipment made to specified standards.

B. Comply with local fire department/marshal standards pertaining to material, hose threads, and installation.

C. Comply with the requirements of NFPA 20 "Centrifugal Fire Pumps" for fire pumps, drivers, controllers, accessories, materials, and installation.

D. Comply with the requirements of NFPA 70-2005 "National Electrical Code" for electrical materials and installation.

E. Fire pumps and controllers shall be UL listed.

F. Comply with the requirements of FM "Approval Guide" as applicable to fire pumps, drivers, controllers, and accessories, and provide system capable of FM acceptance.

G. Manufacturer's Factory Tests: Perform factory test of each fire pump.

1.4 MANUFACTURERS:

A. The following fire pump manufacturers are acceptable:

1. Allis-Chalmers
2. Aurora
3. Peerless

B. The following controller manufacturers are acceptable:

1. Joslyn Clark

2. Metron
3. Hubbell
4. Firetrol

C. The drawings show the layout of equipment based on XXXXXXXX units. Equipment by other approved manufacturers is acceptable provided it fits within the space allocated with adequate maintenance access space and meets all other requirements in the specifications and plans.

PART 2 - PRODUCTS

2.1 FIRE PUMP SYSTEMS - GENERAL REQUIREMENTS

A. Horizontal fire pumps, except in line type, and drivers shall be factory assembled, mounted on same base, and connected with a flexible coupling having a guard.

B. Fire Pumps: UL 448, base-mounted, factory-assembled, and factory-tested, of types, capacities, and characteristics indicated.

C. Preparation for Shipping: After assembly and testing, clean flanges and exposed machined metal surfaces and treat with an anticorrosion compound. Protect flanges, pipe openings, and nozzles.

D. Nameplates

1. Fire Pump and Motor, Pressure Maintenance (Jockey) Pump and Motor: Provide nameplates, complete with motor horsepower, capacity, characteristics, and other pertinent data.
2. Fire Pump and Pressure Maintenance (Jockey) Pump Controllers: Provide nameplate complete with capacity, electrical characteristics, approvals and listings, and other pertinent data, on enclosure door

E. Factory Finish

1. Fire Pump, Motor and Controllers: Red, enamel paint applied to assembled, tested units prior to shipping.
2. Jockey Pump, Motor and Controllers: Manufacturer's standard color enamel paint applied to assembled, tested units prior to shipping.

2.2 AXIALLY-SPLIT-CASE FIRE PUMPS

A. Fire pumps shall furnish not less than 150 percent of rated capacity at not less than 65 percent of total rated head. The shutoff head shall not exceed 120 percent of total rated head.

B. Fire pumps shall be base-mounted, centrifugal, separately coupled, bronze-fitted, axially-split-case design, specifically labeled for fire service.

1. Type: Horizontally mounted, single stage - double suction.

SPEC EDITOR: THE TYPE ABOVE COVERS MOST STIUATIONS. IF NECESSARY, CHOOSE ON OF THE OTHER TYPES LISTED BELOW. DELETE OPTIONS NOT REQUIRED.

2. Type: Horizontally mounted, multistage - single suction.

3. Type: Vertically mounted, single stage - double suction.

C. Casing: Axially-split-case centrifugal design; cast-iron pump casing with suction and discharge flanges machined to ANSI B16.1 dimensions, and 125-psi pressure rating, except where 250-psi rated flanges are indicated.

D. Impeller: Statically and dynamically balanced, of construction to match type fire pump, fabricated from cast bronze, keyed to shaft.

E. Wear Rings: Replaceable, bronze.

F. Pump Shaft and Sleeve: Steel shaft, with bronze sleeve.

G. Pump Shaft Bearings: Grease-lubricated double row ball thrust bearings contained in a cast-iron housing.

H. Seals: Stuffing box consisting of a minimum of 4 rings of graphite-impregnated braided yarn with a bronze lantern ring between center 2 graphite rings, and a bronze packing gland.

I. Pump Couplings: Flexible, capable of absorbing torsional vibration; complete with metal coupling guard.

J. Fire Pump Electric Motor: NEMA MG 1, open drip proof, squirrel cage, induction motor, complying with NFPA 20 and NFPA 70, and wiring compatible with type controller used. Motor shall meet requirements of Section 220513 - Motors.

2.3 FIRE PUMP CONTROLLERS AND ALARM PANELS

A. Combined automatic and non-automatic operation, UL listed and FM approved, factory-assembled and wired, and factory-tested, of types, capacities, electrical characteristics, and with features indicated.

B. Enclosure: NEMA Type 12 (IEC IP55), drip proof, indoor, except where special-purpose enclosure is indicated.

C. Provide controls, devices, alarms, functions, and operations listed in NFPA 20, as required for the type driver and controller used, and the specific items listed for each type controller.

D. Provide mounting for enclosures as indicated:

1. Full-Service Fire Pump Controller Mounting: Wall or floor stand type, as indicated, for field electrical connections.
2. Alarm Panel Mounting: Wall type.

E. Controller Sensing Pipes: Provide nonferrous metal sensing piping, 1/2-inch size, with 1/2-inch globe valves for testing mechanism of controller, from system to pump controller, as indicated. Provide bronze check valve with 3/32-inch orifice in clapper or ground-face union with non-corrosive diaphragm having 3/32-inch orifice.

1. Fabricate pipe and fittings in accordance with NFPA 20.

F. The controllers shall not require rear access for installation or maintenance. For ease of installation in tight corners and basement equipment rooms, the controllers shall be capable of being hand trucked through a standard three-foot door opening without being disassembled.

G. All controllers' components, including circuit breakers and contactors, shall be front mounted, front wired and front accessible for maintenance. The circuit breaker interrupting capacity shall in no case be less than 18,000 AIC SYM. at 480 volts.

H. The controller manufacturer, prior to shipment, shall hook up and test the entire controller as a complete assembly. This test shall include, but not be restricted to, each function the controller may be required to perform including remote alarms, remote start, auto start with manual shut down, remote deluge valve start, pressure drop, manual start-stop, etc. Additionally, the controller manufacturer shall set the instantaneous and longtime trips in the circuit breaker at these settings to see that the breaker trips within the current time requirements stated above. Advise Owner to enable witness of testing at Owner's option

2.4 ELECTRIC-MOTOR-DRIVE FIRE PUMP CONTROLLERS

A. Motor Controllers: Controller specifically listed for electric motor drive fire pump service and service entrance.

SPEC EDITOR: SELECT CONTROLLERS FROM 6 OPTIONS BELOW. SEE EVALUATIONS FOR INFORMATION ON TYPES, APPLICATIONS, AND COSTS OF CONTROLLERS. EDIT TO SUIT PROJECT REQUIREMENTS WHERE MORE THAN ONE TYPE OF CONTROLLER IS REQUIRED. DELETE OPTIONS NOT REQUIRED.

SPEC EDITOR: ITEMS BELOW USUALLY USED FOR SMALL HP MOTORS AND WHERE HIGH INRUSH CURRENT IS ACCEPTABLE.

1. Type: Across the line.
2. Type: Primary resistance.
3. Type: Part winding.
4. Type: Wye-delta (closed transition).
5. Type: Autotransformer.

B. Size controller for scheduled horsepower. Provide controller with short circuit withstand rating at least equal to short circuit current available at controller location, taking into account cable size and distance from substation or supply transformers.

1. Standard: UL218, Standard for Fire Pump Controllers.

C. Provide controller capable of performing or containing the following features:

1. Isolating means and circuit breaker.
2. "Power On" pilot lamp.
3. Fire alarm system connections for indicating motor running condition, loss of line power, and line power phase reversal.
4. Automatic and manual operation, and minimum run time relay to prevent short cycling.
5. Water pressure actuated switch having independent high and low calibrated adjustments responsive to water pressure in fire protection system.
6. Manual and automatic shutdown.

SPEC EDITOR: CHOOSE ONE FOR THE FOLLOWING PARAGRAPHS (POWER TRANSFER SWITCH FOR GENERATOR SET EMERGENCY POWER SOURCE OR

POWER TRANSFER SWITCH FOR SECOND UTILITY EMERGENCY POWER SOURCE) DEPENDING ON TYPE OF EMERGENCY POWER SOURCE.

2.5 POWER TRANSFER SWITCH FOR GENERATOR SET EMERGENCY POWER SOURCE:

A. The power transfer switch shall be housed within the fire pump controller enclosure or in a NEMA Type 12 (IEC IP55) drip-proof enclosure attached directly to the fire pump controller. Where the power transfer switch is provided in an attached enclosure, the enclosures shall be fitted so that the assembly constitutes a single unit. The fire pump controller/power transfer switch shall be factory assembled, wired and tested as a unit prior to shipment.

B. The power transfer switch shall include a motor rated disconnect/isolating switch capable of interrupting the motor locked rotor current. The disconnect/isolating switch shall be mechanically interlocked so that the enclosure door cannot be opened with the handle in the ON position except by a hidden tool operated defeater mechanism. The disconnect/isolating switch shall be capable of being padlocked in the OFF position with up to three padlocks for installation and maintenance safety, and shall also be capable of being locked in the ON position. The enclosure door shall have a locking type handle and three-point cam and roller type vault hardware.

C. Provide an auxiliary contact on the transfer switch to prevent starting of the emergency generator set when the transfer switch or the main fire pump controller are being serviced.

D. The transfer switch circuitry shall be capable of sensing both the normal power source and the emergency power source. The normal power source pickup shall be set at 95 nominal voltage. The emergency power source shall be set to pick up at 90 nominal voltage and 95 nominal frequency. All voltage sensing, frequency sensing, and time delays shall be field adjustable to accommodate individual installation requirements. The transfer signal shall be delayed for one second, delaying the transfer and engine start signals so as to compensate for momentary, normal power outages. An automatic delay of three seconds shall be provided upon transfer to or from the emergency power source to allow the motor to slow sufficiently, preventing line disturbances that could trip either the generator set or fire pump circuit breakers.

E. The transfer switch shall have TRANSFER SWITCH NORMAL, TRANSFER SWITCH EMERGENCY and EMERGENCY ISOLATING SWITCH OFF LED's, TEST and TRANSFER BYPASS switches, an audible alarm device and SILENCE ALARM pushbutton mounted on the flange of the enclosure. The power transfer switch shall be furnished with both normally open and normally closed auxiliary contacts for an engine start signal when normal power failure occurs. Auxiliary contacts shall also be provided and wired to terminals to indicate the transfer switch position. The transfer switch shall be electrically operated and mechanically held, and shall be capable of being operated by a manual transfer mechanism located on the switch.

2.6 POWER TRANSFER SWITCH FOR SECOND UTILITY EMERGENCY POWER SOURCE:

A. The power transfer switch shall be housed within the fire pump controller enclosure or in a NEMA Type 12 (IEC IP55) drip-proof enclosure attached directly to the fire pump controller. Where the power transfer switch is provided in an attached enclosure, the enclosures shall be fitted so that the assembly constitutes a single unit. The fire pump controller/power transfer switch shall be factory assembled, wired and tested as a unit prior to shipment.

B. The power transfer switch shall include a motor rated combination isolating disconnect switch/circuit breaker, mechanically interlocked and operated with a single, externally mounted handle. When moving the handle from OFF to ON, the interlocking mechanism shall sequence the isolating disconnect switch closed first, and then the circuit breaker. When the handle is moved from ON to OFF, the interlocking mechanism shall sequence the circuit breaker open first, and then the isolating disconnect switch.

C. The isolating disconnect switch/circuit breaker shall be mechanically interlocked so that the enclosure door cannot be opened with the handle in the ON position except by a hidden tool operated defeater mechanism. The isolating disconnect switch/circuit breaker shall be capable of being padlocked in the OFF position for installation and maintenance safety, and shall also be capable of being locked in the ON position without affecting the tripping characteristics of the circuit breaker. The enclosure door shall have a locking type handle and three-point cam and roller type vault hardware.

D. The circuit breaker trip curve adjustment shall be factory set, tested and sealed for the connected full load amps of the motor.

E. The fire pump controller/power transfer switch shall have data logging capability for historical operation recording and to aid in annual test, service and trouble shooting. The data logging shall be accessible by front mounted interface panel and also by saving to file. The file shall be in text (.txt) format and easily readable by most common text editing or word processing software. The circuit breaker shall be capable of being field tested to verify actual pick up, locked rotor, and instantaneous trip points after field installation without disturbing incoming line and load conductors.

F. The transfer switch circuitry shall be capable of sensing both the normal power source and the emergency power source. The normal power source pickup shall be set at 95 nominal voltage. The emergency power source shall be set to pick up at 90 nominal voltage and 95 nominal frequency. All voltage sensing, frequency sensing, and time delays shall be field adjustable to accommodate individual installation requirements. The transfer signal shall be delayed for one second, delaying the transfer signal so as to compensate for momentary, normal power outages. An automatic delay of three seconds shall be provided upon transfer to or from the emergency power source to allow the motor to slow sufficiently, preventing line disturbances that could trip either the transfer switch or fire pump circuit breakers.

G. The transfer switch shall have TRANSFER SWITCH NORMAL, TRANSFER SWITCH EMERGENCY and EMERGENCY ISOLATING SWITCH OFF LED's, TEST and TRANSFER BYPASS switches, an audible alarm device and SILENCE ALARM pushbutton mounted on the flange of the enclosure. To aid servicing, no indicating lights or switch devices shall be mounted on the enclosure door. Auxiliary contacts shall be provided and wired to terminals to indicate the transfer switch position. The transfer switch shall be electrically operated and mechanically held, and shall be capable of being operated by a manual transfer mechanism located on the switch.

2.7 ALARM PANEL:

SPEC EDITOR: RETAIN THIS PARAGRAPH ONLY WHEN A REMOTE ALARM PANEL IS REQUIRED.

A. NEMA ICS 6, Type 1 wall-mounting-type panel (or integral with main controller) with audible and visible alarms matching type controller used. Provide following features and manufacturer's standard features:

1. Motor operating condition.
2. Loss of line power.
3. Phase reversal.
4. Low water pressure alarm.

2.8 HORIZONTAL FIRE PUMP ACCESSORY FITTINGS

A. Provide the following accessory fittings, matching fire pump suction and discharge ratings, as required for fire pump capacity rating:

1. Automatic air release valve.
2. Casing relief valve.
3. Suction and discharge pressure gages.
4. Eccentric tapered reducer at suction inlet.
5. Concentric tapered reducer (increaser) at discharge outlet.

2.9 PRESSURE MAINTENANCE (JOCKEY) PUMPS

A. Base-mounted, factory-assembled, and factory-tested, of pump types, capacities, and electrical characteristics indicated. Close-coupled pressure maintenance pumps are exempt from base-mounted requirement.

B. Pressure maintenance pumps shall furnish not less than rated capacity at not less than total rated head indicated.

C. Cast-iron pump casing with suction and discharge connections of size indicated, threaded, or flanged and machined to ANSI B16.1 dimensions, and 125-psi minimum pressure rating, except where 250-psi rated flanges are indicated.

1. Impeller: Bronze or stainless steel.
2. Shaft: Stainless steel.
3. Seals: Mechanical.

D. Multi-Stage Pressure Maintenance Pumps:

1. Multi-stage, centrifugal, vertical construction, base mounting.

E. Electric Motor: NEMA MG 1, open drip proof, squirrel cage, induction motor, complying with NFPA 20 fire pump motor requirements and NFPA 70, and wiring compatible with controller. Motor shall meet requirements of Section 220513 - Motors.

2.10 PRESSURE MAINTENANCE (JOCKEY) PUMP CONTROLLERS

A. Combined automatic and non-automatic operation, UL listed, factory-assembled and wired, and factory-tested, of types, capacities, electrical characteristics, and with features indicated, for electric motor drive pressure maintenance pump service.

1. Type: Across the line.

SPEC EDITOR: MODIFY PARAGRAPH BELOW AS REQUIRED. DELETE IF SYSTEM IS NOT UL.

2. Standard: UL 508.

SPEC EDITOR: MODIFY PARAGRAPH BELOW WHERE NEMA TYPE 1 ENCLOSURE TO BE ALLOWED.

B. Enclosure: NEMA ICS 6, Type 2, wall mounted, for field electrical wiring.

C. Provide controls, devices, alarms, functions, and operations listed in NFPA 20, and the specific items listed.

D. Size controller for scheduled horsepower and provide the following items:

SPEC EDITOR: DELETE FEATURES BELOW NOT WANTED AND ADD OTHER OPTIONS WANTED. SEE MANUFACTURERS' CATALOG LITERATURE FOR VARIOUS OPTIONS.

1. Fusible disconnect switch.
2. Pressure switch.
3. "HAND-OFF-AUTO" selector switch.
4. Pilot light.
5. Running period timer.

E. Mounting: Wall type for field electrical connections.

F. Controller Sensing Pipes: Provide nonferrous metal sensing piping, 1/2-inch size, with 1/2-inch globe valves for testing mechanism of controller, from system to pump controller, as indicated. Provide bronze check valve with 3/32-inch orifice in clapper or ground-face union with non-corrosive diaphragm having 3/32-inch orifice.

1. Fabricate pipe and fittings in accordance with NFPA 20.

2.11 PRESSURE MAINTENANCE PUMP ACCESSORIES

A. Provide following accessory fittings, matching pressure maintenance pump suction and discharge ratings, as required for pump capacity rating:

1. Casing relief valve.
2. Suction and discharge pressure gages.

SPEC EDITOR: COORDINATE CONCRETE WORK WITH DIVISION 3. DELETE ARTICLE BELOW IF EQUIPMENT PADS ARE INCLUDED IN DIVISION 3. COORDINATE SIZE AND LOCATION OF CONCRETE PADS ON THE DRAWINGS. VERIFY STRUCTURAL REQUIREMENTS WITH A STRUCTURAL ENGINEER. VERIFY STRENGTH REQUIREMENTS FOR CONCRETE AND REINFORCING MATERIALS, SPACING, AND PLACEMENT.

2.12 EQUIPMENT BASES

A. Construct concrete equipment pads of dimensions per manufacturers requirements, minimum 6" on all sides. Form concrete pads by using framing lumber with form release compounds. Chamfer top edge and corners of pad.

B. Concrete: Portland cement mix, 4,000 psi:

1. Cement: ASTM C 150, Type I.
2. Fine Aggregate: ASTM C 33, sand.
3. Course Aggregate: ASTM C 33, crushed gravel.
4. Allow concrete to cure before installation of equipment.

C. Reinforcement: Steel conforming to the following:

1. Fabric: ASTM A 185, welded wire fabric, plain.
2. Reinforcement Bars: ASTM A 615, Grade 60, deformed.
3. Install reinforcing, tied to frame, and place anchor bolts and sleeves using manufacturer's installation template.

2.13 FLOW MEASURING SYSTEMS

SPEC EDITOR: DELETE BELOW WHERE FLOW MEASURING SYSTEMS ARE NOT ACCEPTABLE TO LOCAL AUTHORITIES FOR FLOW TESTS. U OF M PREFERENCE IS FOR 'ANNUAL' PITOT TESTS. USE IN APPROPRIATE AREAS.

A. Fire pump flow measuring systems shall be FM approved, indicate flow in gpm to not less than 175 percent of fire pump rated capacity, and consist of a sensing element of size to match pipe, tubing, flow meter, and fittings.

B. Pressure Rating: 175 psi minimum.

C. Sensing Element: Venturi, annular probe, or orifice plate flow sensor.

D. Flow Meter: Compatible with flow sensing element and direct reading in gpm; dial not less than 4-1/2 inches in diameter or equivalent.

SPEC EDITOR: SELECT FROM 2 OPTIONS BELOW.

1. Permanently Mounted: Flow meter suitable for wall mounting with copper tubing for connecting to flow sensing element.
2. Portable: Flow meter, with two 12-foot hoses, in carrying case with handle.

E. Provide flow-measuring systems complete with operating instructions.

2.14 SOURCE QUALITY CONTROL

A. Factory Shop Tests: Hydrostatically test and test run each pump prior to shipment. Test at 150 percent of shut-off head plus suction head, but not less than 250 psig. Produce certified test curves showing head capacity and brake horsepower of each pump. Advise Owner to enable witnessing of the shop tests at Owner's option.

PART 3 - EXECUTION

3.1 EXAMINATION

A. Examine areas, equipment foundations, and conditions with Installer present, for compliance with requirements for installation and other conditions affecting performance of fire pumps. Do not proceed with installation until unsatisfactory conditions have been corrected.

B. Examine fire protection piping systems to verify actual locations of piping connections prior to installation.

3.2 INSTALLATION OF FIRE PUMPS

A. Comply with the manufacturer's written installation and alignment instructions and with NFPA 20 and FM standards.

B. Install pumps in locations indicated and arrange to provide access for periodic maintenance, including removal of motors, impellers, couplings, and accessories.

C. Support pumps and piping independently so that the weight of the piping system does not rest on pumps.

D. Set base-mounted pumps on concrete foundations. Disconnect coupling halves before setting. Do not reconnect couplings until alignment operations have been completed.

1. Support pump base plate on rectangular metal blocks and shims, or on metal wedges having a small taper, at points near the foundation bolts to provide a gap of 3/4 to 1-1/2 inches between the pump base and the foundation for grouting.
2. Adjust the metal supports or wedges until the shafts of the pump and driver are level. Check the coupling faces and suction and discharge flanges of the pump to verify that they are level and plumb.

E. Provide piping accessories, hangers, supports and anchors, valves, meters and gages, and equipment supports as required for complete installation.

F. Provide housekeeping pad for all floor mounted controllers.

G. Electrical Wiring: Install electrical devices furnished by manufacturer but not specified to be factory-mounted. Furnish copy of manufacturer's wiring diagram submittal to Electrical Installer.

1. Verify that electrical wiring installation is in accordance with manufacturer's submittal and installation requirements of Division 26 sections. Do not proceed with equipment start-up until wiring installation is acceptable.

3.3 ALIGNMENT

A. Align pump and driver shafts after complete unit has been leveled on foundation and after grout has set and foundation bolts have been tightened.

B. After alignment is correct, tighten the foundation bolts evenly but not too firmly. Fill the base plate completely with non-shrink, nonmetallic grout, with metal blocks and shims or wedges in place. After grout has hardened, fully tighten foundation bolts. Check alignment and take corrective measures required.

C. Make piping connections, check alignment, and take corrective measures required.

1. Adjust alignment of pump and driver shafts for angular and parallel alignment by one of the two methods specified in the Hydraulic Institute "Centrifugal Pumps - Instructions for Installation, Operation and Maintenance."
2. Alignment tolerances shall meet manufacturer's recommendations.

3.4 CONNECTIONS

A. General: Install valves of types and at locations indicated, that are same size as the piping connecting the fire pump, bypass, test header, and other piping systems.

B. Install suction and discharge pipe sizes equal to or greater than the diameter of fire pump nozzles.

C. Install pressure gages on the suction and discharge of each pump at the integral pressure gage tappings provided.

SPEC EDITOR: OMIT PARAGRAPH BELOW IF FLOW MEASURING SYSTEMS ARE NOT USED.

D. Install flow meters and sensing elements where indicated. Install connections, tubing, and fittings between flow sensing elements and meters as prescribed by manufacturer's installation instructions.

E. Electrical wiring and connections are specified in Division 26 sections.

3.5 FIELD QUALITY CONTROL

A. Manufacturer's Field Service: Provide the services of a factory-authorized service representative to supervise field assembly of components, installation of fire pump units and pressure maintenance pump units, including piping and electrical connections, field acceptance tests, and to report test results in writing.

B. Check suction lines connections for tightness to avoid drawing air into the pump.

SPEC EDITOR: ***MODIFY PARAGRAPH BELOW TO SUIT PROJECT REQUIREMENTS. HOWEVER; RETAIN COMPLIANCE WITH NFPA 20. NORMALLY FIELD ACCPTANCE TESTS ARE PERFORMED FOR OWNER, INSURANCE UNDERWRITER, LOCAL FIRE OFFICALS, AND REPRESENTATIVES OF THE AUTHORITY HAVING JURISDICTION, AND PUMP AND CONTROLLER REPRESENTATIVES.***

C. Perform field acceptance tests of each fire pump unit (fire pump, driver, and controller) and system piping, when installation of fire pump units is complete. Comply with operating instructions and procedures of NFPA 20 to demonstrate compliance with requirements. Where possible, field correct malfunctioning equipment, then retest to demonstrate compliance. Replace equipment that cannot be satisfactorily corrected or that does not perform as specified and as indicated, then retest to demonstrate compliance. Verify that each fire pump unit performs as specified and as indicated.

3.6 COMMISSIONING

A. Start-Up Services, General: Provide the services of a factory-authorized service representative to provide start-up service and to demonstrate and train Owner's maintenance personnel as specified below. Training will not occur at time of start-up.

1. Test and adjust controls and safeties. Replace damaged and malfunctioning controls and components.
2. Train Owner's maintenance personnel on procedures and schedules related to start-up and shutdown, troubleshooting, servicing, and preventative maintenance.
3. Review data in Operating and Maintenance Manuals. Refer to Division 01 Section "Project Closeout."
4. Schedule training with at least 7 days' advance notice after factory-authorized service representative has performed start-up and forwarded a copy of the start-up report to the Owner.

SPEC EDITOR: ***WHERE FIRE PUMPS MUST BE TESTED AND WATER WASTED, A PLACE FOR DISPOSAL OF LARGE QUANTITIES OF TEST WATER MUST BE ARRANGED. IF SPECIFIED FLOW MEASURING SYSTEM WILL BE ADEQUATE FOR TESTS, THEN DELETE PARAGRAPH BELOW. DELETE TEST HEADER, MANIFOLD, AND FIRE HOSE VALVES IN PART 2 OF THIS SECTION, ONLY IF APPROVED BY LOCAL FIRE AUTHORITY. MODIFY BELOW TO SUIT PROJECT CONDITIONS. OWNER MAY WANT TO RETAIN FIRE HOSES. THEN FIRE HOSES SHOULD BE NEW, PARAGRAPH BELOW MUST BE EDITED, AND FIRE HOSES ADDED TO PART 2 OF THIS SECTION.***

5. Provide fire hoses in number, size, and of length as required to reach a storm drain or other acceptable locations for the disposal of fire pump test water. These fire hoses are for use during field acceptance tests only and are not to become property of the Owner.

B. Final Checks Before Start-Up: Perform the following preventative maintenance operations and checks before start-up:

1. Lubricate oil-lubricated bearings.

2. Remove grease-lubricated bearing covers and flush the bearings with kerosene and thoroughly clean. Fill with new lubricant in accordance with the manufacturer's recommendations.
3. Disconnect coupling and check electric motor for proper rotation. Rotation shall match direction of rotation marked on pump casing.
4. Check that pump is free to rotate by hand. If the pump is bound or even drags slightly, do not operate the pump until the cause of the trouble is determined and corrected.

C. Starting procedure for pumps:

1. Prime the pump, opening the suction valve, closing the drains, and prepare the pump for operation.
2. Open the sealing liquid supply valve if the pump is so fitted.
3. Start motor.
4. Open the discharge valve slowly.
5. Observe the leakage from the stuffing boxes and adjust the sealing liquid valve for proper flow to ensure the lubrication of the packing. Do not tighten the gland immediately, but let the packing run in before reducing the leakage through the stuffing boxes.
6. Check the general mechanical operation of the pump and motor.

END OF SECTION 213113

UNIVERSITY OF MICHIGAN
ARCHITECTURE, ENGINEERING AND CONSTRUCTION

ARCHITECTURE & ENGINEERING
326 East Hoover, Mail Stop B
Ann Arbor, MI 48109-1002
Phone: 734-764-3414
Fax: 734-936-3334

BuildingName
The Description of the Project
P00000000 0000

SPECIFICATION DIVISION 22

NUMBER SECTION DESCRIPTION

DIVISION 22 PLUMBING
SECTION 220500 - COMMON WORK RESULTS FOR MECHANICAL

END OF CONTENTS TABLE

DIVISION 22 PLUMBING
SECTION 220500 - COMMON WORK RESULTS FOR MECHANICAL

REVISIONS:
2012-07-24: UPDATED CODE REFERENCES AND ADDED REFERENCES TO SID-F AND DG SECTION 220500. ADDED REFERENCE TO SECTION 078413 UNDER FIRESTOPPING. REVISED 'GRINNELL' TO 'ANVIL' IN PARA'S 2.3.A.3, 2.3.B.1.AAND 2.3.C.1, REMOVED POWDER ACTUATED FASTENERS, MOVED BELT DRIVES TO SECTION 233400 FANS. B. BEGG FOR PLMG MTT.

2017-08-02: REVISED TO DELETE REFERENCES TO 2009 MECH AND PLMG CODES, AND TO PROVIDE CORRECT LINK TO U-M DG CODE PAGE. D. KARLE FOR PLMG MTT.

PART 1 - GENERAL

1.1 RELATED DOCUMENTS

INCLUDE PARAGRAPH 1.1.A AND B IN EVERY SPECIFICATION SECTION. EDIT RELATED SECTIONS 1.1.B TO MAKE IT PROJECT SPECIFIC.

A. Drawings and general provisions of the Contract, Standard General and Supplementary General Conditions, Division 1 Specification Sections, and other applicable Specification Sections including the Related Sections listed below, apply to this Section.

B. Related Sections:

1. Section 078413 - Penetration Firestopping

1.2 INTERPRETATION OF DRAWINGS:

A. The Drawings show the location and general arrangement of equipment, piping, ductwork and related items. They shall be followed as closely as elements of the construction will permit. Examine the drawings of other trades and verify the conditions governing the work on the job site. Drawings are schematic in nature, and installation may require additional offsets and modifications, including fittings, traps, valves and accessories.

B. The architectural and structural drawings take precedence in all matters pertaining to the building structure, mechanical drawings in all matters pertaining to mechanical trades and electrical drawings in all matters pertaining to electrical trades. Report conflicts or differences to the architect/ engineer for resolution.

1.3 PROJECT RECORD DOCUMENTS:

A. For underground piping, record dimensions and invert elevations of all piping, including all offsets, fittings, cathodic protection and accessories. Locate dimensions from benchmarks that will be preserved after construction is complete.

B. For fire protection systems, record actual locations of sprinkler heads, and valves and deviations of piping from drawings. Indicate drain and test locations.

1.4 DELIVERY, STORAGE AND HANDLING:

A. Deliver, store and handle all materials to keep clean and protected from damage.

B. Store products in shipping containers and maintain in place until installation. Provide temporary inlet and outlet caps. Maintain caps in place until installation.

C. Protect equipment and other materials from damage after installed from construction debris and other damage.

1.5 QUALITY ASSURANCE:

A. Regulatory Requirements: Comply with the following:

1. Michigan Mechanical Code.
2. Michigan Plumbing Code.
3. Applicable City of Ann Arbor rules and regulations.

B. Labeling requirement for packaged equipment:

1. Electrical panels on packaged mechanical equipment shall bear UL label or label of other approved testing agency (ETL, CSA).

C. Other referenced standards:

1. Comply with codes and regulatory agency requirements as detailed in University of Michigan Design Guideline 1.0 Codes and Regulatory Agencies (http://www.umaec.umich.edu/for-vendors/design-guidelines/1-0-codes-and-regulatory-agencies/)

PART 2 - PRODUCTS

2.1 FIRE STOPPING:

A. Provide UL classified firestopping system for mechanical penetrations through fire rated construction to maintain the fire rating. See Related Section for additional firestopping requirements, including approved manufacturers.

2.2 ACCESS PANELS:

SPEC EDITOR: COORDINATE USE OF ACCESS DOORS WITH ARCHITECT

A. Furnish access panels to access valves, traps, control valves or devices, dampers, damper motors, etc. Access panels shall be sized as necessary for ample access, or as indicated on drawings, but no smaller than 12” x 12” where devices are within easy reach of operator, and at least 24"x24" when operator must pass through opening in order to reach the devices. Architectural Trades shall install access panels coordinated with Mechanical Trades.

B. Access panels in fire rated walls or ceiling must be U.L. labeled for intended use. Unless otherwise indicated on plans, access doors shall be hinged flush type steel framed panel, 14 gauge minimum for frame, and with anchor straps. Only narrow border shall be exposed. Hinges shall be concealed type. Locking device shall be flush type and screw driver operated. Metal surfaces shall be prime coated with rust-inhibitive paint. Panels shall be compatible with architectural adjacent materials Manufacturer: Milcor, Bilco

2.3 BUILDING ATTACHMENTS FOR MECHANICAL WORK SUPPORTS:

SPEC EDITOR: PROJECT SPECIFIC DETAILS MUST ACCOMPANY SPECIFICATIONS.

SPEC EDITOR: SPEC TEAM IS CONTINUING TO RESEARCH BUILDING ATTACHMENTS. EDIT CAREFULLY

A. General Requirements:

1. Provide building attachments required for supporting mechanical work, suitably selected and installed for the loads applied with a minimum additional safety factor of 3.
2. Where specified attachments are not suitable for conditions, submit to Engineer for approval, proposal for alternate building attachments.
3. Approved Manufacturers: Anvil, or equivalent products by Michigan Hanger and B-Line.
4. Provide supplemental trapeze supports where necessary. Design trapeze to support all trades. Coordinate loads, and supports with all trades. Size trapeze for maximum deflection of 1/64 of the span.

B. Attachments to Structural Steel:

1. Support mechanical work from building structural steel where possible and approved. No welding or bolting to structural steel is permitted unless authorized by Architect. C-clamps are not permitted.
   a. Center beam clamp - for loads over 120 lb.: Malleable center hung Anvil Fig. 228.
   b. Side beam clamp with retaining clips - for loads up to 120 lb.

C. Cast in Place Concrete Inserts:

SPEC EDITOR: APPLICABLE FOR SUPPORTING FROM NEW CONCRETE ONLY.

1. Provide inserts selected for applied load of present load plus 100% for future, and coordinated with concrete work. Except as detailed on drawings, inserts shall be Unistrut or Grinnell. Plan, lay out and coordinate setting of inserts prior to concrete pour. Use Anvil Fig. 285 lightweight concrete insert for loads up to 400# or Anvil Fig. 281 Wedge Type concrete insert for loads up to 1200#

D. Drilled Insert Anchors:

SPEC EDITOR: APPLICABLE FOR SUPPORTING FROM NEW AND EXISTING CONCRETE. COORDINATE LOADING WITH STRUCTURAL ENGINEER. DEVELOP AND EDIT CRITERIA FOR PROJECT SPECIFIC REQUIREMENTS

1. Where mechanical work cannot be supported from structural steel, or cast in place concrete inserts, provide drilled concrete insert anchors. Submit for approval, project specific installation drawings for all loads over 100 lbs. Install inserts in web of beam if possible and approved. Insert depth shall not exceed two thirds the thickness of the concrete. Where existing concrete appears to be deteriorating, or where applied load at insert exceeds 1000 lbs., conduct test of concrete to determine derated capacity of insert. Anchors may be adhesive or expansion type up to 1000 lbs., and shall be adhesive type for loads over 1000 lbs.
   Manufacturers: Hilti, Powers Fasteners

SPEC EDITOR: POWDER ACTUATED FASTENERS HAVE BEEN REMOVED FROM THIS SPECIFICATION. IF A DESIGN REQUIRES POWDER ACTUATED FASTENERS, DESIGNER TO DEVELOP AND ADD SPECIFICATION.

PART 3 - EXECUTION

3.1 GENERAL REQUIREMENTS

A. Install equipment and materials in accordance with manufacturer's written and illustrated instructions, as detailed on drawings and as described in these specifications. Bring discrepancies in installation methods to the attention of the owner and A/E.

B. Install hanger rod straight, without bending.

3.2 REFRIGERANT HANDLING

A. Refrigerant Installation and Disposal: Perform all work related to refrigerant contained in chillers, cooling coils, air conditioners, and similar equipment, including related piping, in strict accordance with the following requirements:

1. ASHRAE Standard 15 and Related Revisions: Safety Code for Mechanical Refrigeration.
2. ASHRAE Standard 34 and Related Revisions: Number Designation and Safety Classification of Refrigerants.
3. United States Environmental Protection Agency (US EPA) requirements of Section 808 (Prohibition of Venting and Regulation of CFC) and applicable State and local regulations of authorities having jurisdiction.

B. To assure the proper handling of refrigerant materials, the Owner has implemented a tracking procedure for all CFC and HCFC refrigerants. When new refrigeration equipment is installed, or when refrigerant is disposed of, the "Refrigerant Disposal Form" must be completed. A copy of the form has been included with the Project Bidding Requirements and General Conditions package. Alternatively, copies may be obtained from Owner's Plant Operations Air Conditioning Shop. Contact Air Conditioning Shop Foreman at (734) 647-2041. Submit completed forms to the Owner's Representative and Air Conditioning Shop Foreman.

C. Recovered refrigerant is the property of the Contractor. Dispose of refrigerant legally, in accordance with applicable rules and regulations of authorities

END OF SECTION 220500

UNIVERSITY OF MICHIGAN
ARCHITECTURE, ENGINEERING AND CONSTRUCTION

ARCHITECTURE & ENGINEERING
326 East Hoover, Mail Stop B
Ann Arbor, MI 48109-1002
Phone: 734-764-3414
Fax: 734-936-3334

BuildingName
The Description of the Project
P00000000 0000

SPECIFICATION DIVISION 22

NUMBER SECTION DESCRIPTION

DIVISION 22
SECTION 220513 - MOTORS

END OF CONTENTS TABLE

DIVISION 22
SECTION 220513 - MOTORS

REVISIONS:

3-1-09: REVISED BEARING REQUIREMENTS AND MOTOR FRAME REQUIREMENTS BY D. KARLE PER MECH TECH TEAM.

10-21-10: REVISED TO ADD GROUNDING RINGS FOR HOSPITAL MOTORS OPERATED ON VFDS BY L. RICHARDSON FOR MECH TECH TEAM.

12-09-2010 - REVISED PERFORMANCE REQUIREMENTS AND REVISED FORMAT.

08-30-2012: REVISED TO DROP REQUIREMENT FOR MOTORS TO COMPLY WITH ALL PARTS MG-1 PART 31 AND TO DROP REQUIREMENT THAT MOTOR LABELS STATE "INVERTER DUTY". UPDATED MG-1 REFERENCES FROM MG-1 2009 TO MG-1 2011. D. KARLE FOR HVAC MTT.

07-29-13: REVISED TO DELETE "CLASS B TEMPERATURE RISE" REQUIREMENT FOR A MOTOR USED WITH A VFD PER K. BIRRINGER. D. KARLE.

OCT. 2016: REVISED 2.4.K. TO REQUIRE SHAFT GROUNDING RINGS FOR ALL MOTORS, AND CERAMIC BEARINGS ON THE NON-DRIVE END OF MOTORS 100 HP AND ABOVE, IN ALL CASES AS OPPOSED TO JUST FOR HOSPITAL FUNDED PROJECTS. CHANGE DUE TO NEW EVIDENCE OF BEARING FAILURES FROM ELECTRICAL DISCHARGE, PER DECISION OF AD-HOC COMMITTEE ON MOTOR FAILURES CONVENED 10-13-16. PER THAT COMMITTEE, USE OF CERAMIC BEARINGS MAY BE DROPPED AT LATER DATE AFTER ADDITIONAL RESEARCH, SINCE CERAMIC BEARINGS MAY NOT BE EFFECTIVE. ADDITIONALLY IMPROVED SPECIFICATION LANGUAGE FOR MOTORS ON VFDS, INCLUDING DROPPING REQUIREMENT FOR "RATED INVERTER DUTY" SINCE THAT TERM IS UNDEFINED BY NEMA. D. KARLE

PART 1 - GENERAL3

1.1 RELATED DOCUMENTS

INCLUDE PARAGRAPH 1.1.A AND B IN EVERY SPECIFICATION SECTION. EDIT RELATED SECTIONS 1.1.B TO MAKE IT PROJECT SPECIFIC.

A. Drawings and general provisions of the Contract, Standard General and Supplementary General Conditions, Division 1 Specification Sections, and other applicable Specification Sections including the Related Sections listed below, apply to this Section.

B. Related Sections:

1. Division 26: Electrical.

1.2 SUMMARY

A. Section includes:

1. Motors and requirements for factory or field installed motors, including but not limited to, air handling units, fans, pumps, and air compressors.

SPEC EDITOR: A/E MUST PROVIDE THE MOTOR SPECIFICATIONS FOR THE SPECIALIZED EQUIPMENT INDICATED BELOW. VERIFY IF THESE MOTORS ARE AVAILABLE IN EFFICIENCIES THAT COMPLY WITH NEMA MG-1 (2011) TABLE 12-12 AND SPECIFY AS SUCH, WHENEVER POSSIBLE.

B. This section does not include motors for fire pumps, elevators, centrifugal chillers, sealed refrigeration equipment and vertical hollow or vertical solid shaft motors used with vertical turbine pumps.

1.3 SUBMITTALS

A. Submit the following product data for approval:

1. Manufacturer information.
2. Dimensions and elevations.
3. Complete NEMA nameplate electrical data including design type, insulation, service factor, and efficiency.
4. Materials of construction.
5. Bearing type, L10 life, and seal construction (open, single, or double shielded).
6. Certification that VFD driven motors comply with NEMA MG-1 Part 31.

1.4 QUALITY ASSURANCE

A. Manufacturers and Products: The products and manufacturers specified in this Section establish the standard of quality for the Work. Subject to compliance with all requirements, provide specified products from the manufacturers named in Part 2.

B. Reference Standards: Products in this section shall be built, tested, and installed in compliance with the following quality assurance standards; latest editions, unless noted otherwise.

C. NFPA 70: National Electrical Code.

D. NEMA Standards Publication MG 1 (2011): Motors and Generators.

E. ABMA 9: American Bearings Manufacturers Association, Load Ratings and Fatigue Life for Ball Bearings.

F. UL 1004: Motors, Electric.

1.5 WARRANTY

A. Provide a complete parts and labor warranty for a minimum of one year from the date of Substantial Completion.

PART 2 - PRODUCTS

2.1 MANUFACTURERS

A. Acceptable manufacturers of motors 1/2 HP and larger.

1. Reliance Electric.
2. Baldor Electric Company.
3. Dayton.
4. General Electric.
5. Toshiba Corporation.
6. U. S. Electrical Motors.
7. Leeson Electric.
8. Marathon Electric.

2.2 MOTORS - GENERAL REQUIREMENTS

SPEC EDITOR: THE FOLLOWING IS GENERALLY APPLICABLE. REVIEW AND EDIT TO SUIT PROJECT.

A. Motors 1/2 HP and larger shall be three-phase, squirrel cage, induction type.

B. Motors smaller than 1/2 HP shall be single-phase, permanent split capacitor type, with built-in overload protection.

C. Frequency Rating: 60 Hz, alternating current.

D. Voltage rating of motor shall be determined by voltage of circuit to which motor is connected.

1. 120 V Circuit: 115 V motor rating.
2. 208 V Circuit: 200 V motor rating.
3. 240 V Circuit: 230 V motor rating.
4. 480 V Circuit: 460 V motor rating.

E. Motors shall be NEMA Design B.

F. Provide Class B insulation, unless noted otherwise.

G. Service Factor: 1.15, unless noted otherwise.

H. Motors shall be nominal 1,800 rpm, unless noted otherwise.

I. All disconnects and other electrical accessories shall comply with Division 26 requirements.

2.3 SINGLE PHASE MOTORS

A. Use shaded pole motors only for motors smaller than 1/20 HP.

B. Provide automatic reset type thermal over-load protection.

C. Bearings: Sealed or regreasable ball or sleeve bearings, suitable for the radial and thrust loading of the application.

D. Furnish with sliding base/slotted mounting holes adequate for proper belt tensioning and alignment of motor or motor/load.

E. Nameplates may be printed-type glued to the motor.

2.4 THREE PHASE MOTORS

A. Enclosure: Open Drip Proof (ODP) unless noted otherwise in equipment specifications or schedules, and as suitable for service and application.

SPEC EDITOR: ***ODP IS THE U-M STANDARD FOR MOST APPLICATIONS. TOTALLY ENCLOSED FAN COOLED (TEFC) MOTORS ARE SPECIFIED FOR COOLING TOWERS AND SOME OTHER APPLICATIONS. WHERE TEFC OR OTHER NON-ODP ENCLOSURES ARE REQUIRED, INCLUDE SPECIFIC REQUIREMENT IN EQUIPMENT SPECIFICATION SECTION AND/OR ON EQUIPMENT SCHEDULE.***

B. Motor Efficiency: Nominal (nameplate) full load efficiency and corresponding minimum efficiency shall be equal to or greater than that stated in NEMA MG-1 (2011) Table 12-12 – Full Load Efficiencies of 60hz NEMA Premium Efficient Electric Motors - 600 volts or Less

C. Motors less than 3 HP: Steel or cast iron motor frames, cast aluminum, cast iron, or steel end plates, steel or cast iron terminal box, copper windings. Motor nameplates shall be steel, engraved-type, riveted to motor.

1. Bearings: Regreasable with relief plugs, pre-lubricated ball bearings suitable for radial and thrust loading of the application, with grease fittings, selected for a minimum L-10 bearing life of 26,280 hours, for belted and direct drive.

D. Motors 3 HP and above: cast iron motor frame and mounting feet, cast iron end plates (bells), steel or cast iron terminal box, copper windings. Motor nameplates shall be stainless steel engraved type, riveted to the motor.

1. Bearings shall be regreasable with relief plugs, pre-lubricated ball bearings suitable for radial and thrust loading of the application, with grease fittings. Rated for an L-10 life of 40,000 hours (belted) or 130,000 hours (direct connected).

E. Bearing life calculations shall be per ABMA 9, and for belted applications shall be based on the maximum external side load limits for belted applications per NEMA MG-1 Table 14-1A. L-10 life calculations for vertical motors and horizontal motors mounted in the vertical position shall consider the application’s thrust loading.

F. TEFC motors shall also include an external shaft slinger on drive end.

G. Motors shall not exceed dBA levels listed in NEMA MG-1 54 PART 9 Tables 9-1 and 9-3, at all speeds.

H. Motors shall be suitable for continuous duty at rated horsepower, with a maximum hot spot temperature that does not exceed the temperature limit of the insulation, when operated in an ambient temperature of 40 degrees C, except as otherwise indicated.

I. Direct connected motors shall be furnished with adjustable base. Motors connected to driven equipment by belt or shaft shall be furnished with adjustable NEMA foundation sliding bases.

J. Multi-Speed Motors: Separate windings shall be provided for each speed.

K. For motors used with variable frequency drives, provide General Purpose NEMA Premium Efficiency Class motors compying with NEMA MG-1 Part 30 with windings that meet the requirements of NEMA MG-1 Part 31.4.4.2 and with minimum insulation of Class F.

1. For all PWM VFD driven motors up to 100 HP:

a. Provide a maintenance free, circumferential conductive micro fiber grounding ring installed on the AC motor to discharge shaft currents to ground. Grounding ring shall be AEGIS SGR (Shaft Grounding Ring).
b. Motors protected by the AEGIS SGR shall be warranted for the term of the manufacturer's motor warranty from induced bearing current damage.

2. For all PWM VFD driven motors 100 HP & greater:
a. Provide a maintenance free, circumferential conductive micro fiber grounding ring installed on the drive end of the AC motor to discharge shaft currents to ground. Grounding ring shall be AEGIS SGR (Shaft Grounding Ring). In addition, all VFD driven motors 100 HP and larger shall utilize an insulated ceramic bearing assembly on the non-drive end of the motor, in conformance with the Aegis installation requirements.

L. Explosion Proof motors:

1. UL listed for application or duty.
2. Motors shall conform to requirements defined in Article 500, 501, 502, and 503 of the National Electric Code.
3. Motor nameplate shall be specifically marked "explosion proof."
4. Sound power levels shall not exceed recommendations of NEMA MG-1 PART 9 Tables 9-1 and 9-3, at all speeds.

PART 3 - EXECUTION

3.1 INSTALLATION

A. Install and align motors in accordance with equipment manufacturer's recommendations.

B. For VFD driven motors using a shaft grounding ring: Install grounding ring in accordance with the manufacturer’s recommendations, including the application of a colloidal silver shaft coating on the motor shaft.

3.2 COMMISSIONING

A. Perform the commissioning activities as outlined in the Division 01 Section Commissioning and other requirements of the Contract Documents.

3.3 ADJUSTING, CLEANING, PROTECTION

A. Assure motor nameplate is legible and properly affixed.

B. Verify that bearings are factory lubricated before starting motors. Lubricate per manufacturer’s instructions. Do not over-lubricate bearings.

C. Check motors for unusual heating, noise, or excess vibration during operation. Correct any such deficiencies.

1. Any motors with vibration exceeding specified limits, as noted in the Testing, Adjusting and Balancing Section, or manufacturer's recommendations, whichever is more stringent, shall be corrected, at no cost to Owner, until reduced below those limits.

D. Clean the motor prior to start-up and immediately prior to final turn over to the Owner.

END OF SECTION 220513

UNIVERSITY OF MICHIGAN
ARCHITECTURE, ENGINEERING AND CONSTRUCTION

ARCHITECTURE & ENGINEERING
326 East Hoover, Mail Stop B
Ann Arbor, MI 48109-1002
Phone: 734-764-3414
Fax: 734-936-3334

BuildingName
The Description of the Project
P00000000 0000

SPECIFICATION DIVISION 22

NUMBER SECTION DESCRIPTION

DIVISION 22 PLUMBING
SECTION 220514 - VARIABLE FREQUENCY DRIVES

END OF CONTENTS TABLE

DIVISION 22 PLUMBING
SECTION 220514 - VARIABLE FREQUENCY DRIVES

REVISIONS:

OCTOBER 2008: REVISED TO ADD TOTAL HARMONIC DISTORTION LIMITS, SUBMITTAL REQUIREMENTS, PID CONTROLLER, TIME CLOCK, AND MISC. OTHER CORRECTIONS AND CLARIFICATIONS BY D. KARLE FOR HVAC MECH TECH TEAM.

3-11-09: DELETE REQUIREMENT FOR MOTOR-ON-VFD PILOT LIGHT, DRIVE FAILURE PILOT LIGHT; CLARIFY REQUIREMENT FOR RUN PERMISSIVE, POWERED RUN MODE, AND POWERED RUN REQUEST CIRCUITS. BY D. KARLE FOR HVAC MECH TECH TEAM.

6-8-09: ADDED: RELAYS TO BE PLUG-IN STYLE, MAIN AND INVERTER DISCONNECT TO BE ACCESSIBLE W/O OPENING CABINET, FUSES TO BE IN FUSE BLOCKS. D. KARLE FOR HVAC MECH TECH TEAM.

10-15-09: ADDED: REQUIREMENT THAT WIRES ON THE SUBMITTAL DIAGRAMS SHALL BE LABELED WITH AN IDENTIFIER AND THAT WIRES BE CORRESPONDINGLY TAGGED IN THE DRIVE CABINET. D. KARLE FOR HVAC MECH TECH TEAM.

5-9-11: ABB ADDED AS APPROVED MFR. PER HVAC MTT (D.KARLE).

9-10-12: ADDED REQUIREMENT THAT DRIVE BE IN A NEMA 1 OR NEMA 3R ENCLOSURE. D. KARLE FOR HVAC MTT.

01-24-13: ADDED REQUIREMENT AND EDITOR NOTE FOR SHORT CIRCUIT CURRENT RATING.

PROVIDE A COPY OF THIS SECTION TO THE ELECTRICAL ENGINEER FOR COORDINATION. INDICATE LOCATION OF VFD IN MECHANICAL PLANS AND ENSURE IT IS SHOWN IN ELECTRICAL PLANS. INCLUDE VFD SCHEDULE. SPECIFY 480V IN LIEU OF 208V WHERE EVER POSSIBLE, ESPECIALLY WHEN POWER SOURCE ALSO FEEDS COMPUTERS. ON RETROFIT PROJECTS, BE SURE THAT EXISTING MOTOR IS COMPATIBLE WITH THE NEW VFD.

PART 1 - GENERAL

1.1 RELATED DOCUMENTS

INCLUDE PARAGRAPH 1.1.A AND B IN EVERY SPECIFICATION SECTION. EDIT RELATED SECTIONS 1.1.B TO MAKE IT PROJECT SPECIFIC.

A. Drawings and general provisions of the Contract, Standard General and Supplementary General Conditions, Division 1 Specification Sections, and other applicable Specification Sections including the Related Sections listed below, apply to this Section.

1.2 SCOPE OF WORK:

A. Provide variable frequency drives (VFD) meeting the requirements contained herein and as indicated in the VFD schedule.

1.3 QUALITY ASSURANCE:

A. VFD shall comply with NFPA 70 (National Electrical Code), IEEE 519, UL 508, NFPA 70, and FCC compliance for Radio Frequency Interference (RFI) and Electro- Mechanical Interference (EMI).

1.4 WARRANTY:

A. Provide a minimum of 3 years parts and labor warranty from the date of final acceptance by the University.

1.5 ACCEPTABLE MANUFACTURERS:

A. Variable speed drives shall be manufactured by one of the following: Danfoss, Toshiba, ABB. VFDs manufactured by parent companies or their subsidiaries are not acceptable.

1.6 SUBMITTAL DATA

A. Submit for approval, the following product data:

1. Dimensions and elevations.
2. Complete product data listing all included features.
3. The electrical rating for each VFD, matched to each piece of driven equipment.
4. Short circuit current (withstand) rating.
5. Project specific wiring diagrams indicating:
    a. Line/load connection points
    b. Main input and inverter input disconnect switches
    c. VFD/bypass switch circuit
    d. Fusing/circuit breakers
    e. Auxiliary control transformer
    f. Local/remote circuit
    g. Hand-off-auto circuit
    h. Safety interlock, run permissive, and drive initiated external circuits
    i. Analog inputs and outputs
    j. Pilot lights
    k. Each wire on the wiring diagram shall be labeled with a distinct wire identifier.
6. VFD panel face diagram indicating the location of the main and inverter disconnect switches, local/remote and H-O-A switches, VFD/bypass switch, pilot lights, digital display, keypad, and any other face mounted device, along with the panel face labeling.

PART 2 - PRODUCTS

2.1 GENERAL:

A. VFDs designated for installation indoors shall have enclosures rated NEMA 1. VFDs designated for installation outdoors shall have enclosures rated NEMA 3R minimum. The same NEMA requirements shall be provided for enclosures housing a bypass or any other accessory.

B. Unit shall be dead front construction.

C. All relays shall be plug-in style base.

D. All fuses shall be mounted in fuse blocks with insulated covers. Covers shall shield fuse ends and wire terminations.

COORDINATE WITH THE ELECTRICAL ENGINEER AND INSERT THE REQUIRED MINIMUM SHORT CIRCUIT CURRENT RATING.

E. The VFD (including bypass and other accessories) shall have an overall short circuit current (withstand) rating of _____ amps symmetrical minimum, and shall be marked with its short circuit current rating in compliance with UL.

F. The unit, including all specified accessories, shall have a minimum efficiency of 85 percent at any speed from 50 to 100 %. The unit shall have a power factor of 0.9 or higher when operating at any speed from 50 to 100%.

G. The VFD shall be variable torque type and shall provide full motor torque at any operating speed from 40% to 100%.

H. The VFD shall provide variable torque V/Hz control when operating at speeds less than 100%.

I. Provide the drive with a main input disconnect switch, accessible without opening the drive cabinet, equipped with current limiting fuses and fuse rejection clips, or with circuit breakers. All other fuse blocks with current limiting fuses installed shall be equipped with fuse rejection clips. It shall be possible to padlock the disconnect swith in the off position.

HOSPITAL PROJECTS MAY REQUIRE 18 PULSE DRIVES. REVIEW THE HOSPITAL DESIGN GUIDELINES AND CONSULT WITH HOSPITAL FACILITIES AND ADJUST THE BELOW PARAGRAPH IF REQUIRED.

J. Provide minimum 6 pulse PWM type drives.

K. Provide the necessary electronics to avoid audible noise generated from motor due to frequency change. The unit shall not increase the motor audible noise by more than 3 dB above the motor's across the line noise at any motor speed from 50 to 100 %.

L. The unit shall include self diagnostics with a digital display that identifies fault conditions and simplifies trouble shooting. Fault indication shall be retained even after a power outage or an input over-current protective device trip.

M. Unit shall be provided with RFI/EMI filters.

N. Unit shall be UL, CSA or ETL labeled.

O. VFD shall include current sensors on all three output phases to accurately measure motor current.

SPEC EDITOR: THE ENGINEER MUST SPECIFY AS PART OF THE DIVISION 26 ELECTRICAL TESTING SECTION THAT THE CURRENT AND VOLTAGE THD BE MEASURED AT EACH DRIVE.

P. Provide minimum 3 percent AC input line reactors and/or minimum 5 percent DC link reactors to limit the maximum current total harmonic distortion (THD) to not more than 100% of the VSD input current waveform at any VSD operating speed from 20% to 100%. Reactors shall be integral to the VSD. The reactor(s) shall not be active when the drive is in bypass mode. If testing reveals the maximum THD is exceeded, the manufacturer shall provide and install additional reactors at no cost to reduce the THD to within these specified limits.

Q. The unit shall have a dedicated terminal block for all external inputs and outputs.

R. Provide factory mounted and wired 115V, 1 phase, 60 Hz control power transformer sized for handling an additional 30 VA inductive load. Limit fuse size for the control transformer to 3 amps maximum.

SPEC EDITOR: 480V IS OUR STANDARD VOLTAGE FOR VFDS, EVEN IF POWER AVAILABLE IS 208V/3P. IN THOSE CASES, WORK WITH THE ELECTRICAL ENGINEER AND PROVIDE A STEP-UP TRANSFORMER. IF MOTOR MUST USE 208V FOR A SPECIFIC APPLICATION, COORDINATE WITH ELECTRICAL ENGINEER AND PROVIDE A DESIGN THAT SEGREGATES VFD FROM ANY FEEDER CIRCUIT OR PANEL THAT ALSO FEEDS COMPUTERS OR ELECTRONIC EQUIPMENT.

S. The VFD input and output shall be rated at 480 V, 3 phase.

SPEC EDITOR: BYPASS MAY BE OMITTED FOR FULLY REDUNDANT EQUIPMENT. SEE U-M DESIGN GUIDELINES FOR FURTHER INFORMATION. DO NOT INDISCRIMINATELY REQUIRE BYPASSES. INSTALL A BYPASS FOR ALL LABORATORY FANS.

T. Provide a factory mounted and wired manual bypass device as scheduled. The bypass device shall allow the load to run across-the-line while electrically isolating the VFD so that maintenance can be performed on the drive components.

2.2 CONTROL FEATURES:

A. The VFD shall be provided with the following control features:

1. Factory mounted and wired Hand-Off-Auto selector switch that allows local or remote starting or stopping of the drive. Separate start and stop buttons, electronic circuits that "virtually" provide this capability, or other alternative devices are not acceptable.
2. Factory mounted and wired VFD-Bypass switch, if bypass device is provided.

3. Factory mounted and wired Local-Remote speed control switch, that allows either local or remote control of the drive speed. Key pad buttons are also acceptable provided that permanently labeled, dedicated buttons are provided for the local and the remote speed control functions.
4. Main input disconnect switch.
5. Inverter input disconnect switch, accessible without opening the drive cabinet, if bypass device is provided.
6. Manual speed potentiometer or keypad control, for local speed control with the Local-Remote speed control switch in the Local position.
7. VFD shall accept an input reference (feedback) signal, 0-10 Vdc analog input, or 4-20 mA analog input, as indicated in VFD schedule, for remote speed control with the Local-Remote speed control switch in the Remote position. Provide input signal isolation to isolate input signal ground from VFD internal control ground.

SPEC EDITOR: NORMALLY DELETE THE FOLLOWING PARAGRAPH. PNEUMATIC VFD CONTROL IS RARELY USED.

8. Pneumatic, 3-15 psig analog input (with pressure gauge) for remote speed control, when indicated.
9. A remote start/stop contact input that functions in the automatic mode only.
10. A safety interlock circuit that functions in drive and by-pass modes.
11. A run permissive circuit, separate from the safety interlock circuit, which prevents motor operation whether in drive or bypass mode. This circuit, via the customer's external contact device, signals the motor may run, provided the safety interlock contact(s) is made. A typical application would be for a time delay before motor start to allow some external event to occur. The run permissive circuit shall be jumpered from the factory.
12. Provide the following drive initiated external circuits:
    a. Powered run mode: A circuit that is powered after the motor is started in drive or by-pass modes.
    b. Powered run request: A circuit that is powered whenever the drive safety interlock contact(s) are closed, and the drive H-O-A is in hand, or the drive H-O-A is in auto and the remote start/stop contact is closed.
13. A standard USB port for direct connection of a Personal Computer (PC) to the VFD. The manufacturer shall provide PC software to allow complete setup and access to the VFD through the USB port. It shall be possible to communicate to the VFD through this USB port without interrupting VFD communications to the building management system
14. An integral PID controller that, when activated, controls drive speed to maintain a programmed setpoint based on a remote analog input feed-back signal.
    a. The VFD shall be able to apply a scaling factor to the feedback signal
    b. The VFD shall be able to calculate the square root of the feedback signal so that a pressure sensor can be used to measure flow.
15. A real-time clock shall be an integral part of the VFD.

a. It shall be possible to use this to display the current date and time on the VFD's display.
b. The clock shall include a time clock function with 7 day programmability and a minimum of four programmable time periods per day, with individually selectable ON and OFF functions. The time clock function shall be programmable to control start/stop functions, constant speeds, PID parameter setpoints and output relays. The time clock function shall be programmable through the controller display and keypad, or by included software that allows programming via a PC and a USB connection.

16. VFD shall be capable of starting a coasting load.
17. VFD shall automatically attempt to restart a minimum of three (3) times during an adjustable time period of no less than 30 seconds after shutting off for any reason, except for short circuit or motor overload.
18. The VFD shall have adjustable motor acceleration and deceleration rates.
19. The VFD shall have the ability to lock-out a minimum of four critical frequency ranges to prevent the VFD from operating the load at a speed that causes vibration in the driven equipment.
20. The VFD shall be configured as required to meet system operational requirements including:
    a. Provide an additional set of N.O. contacts on the VFD-Bypass switch that close when the switch is set to Bypass.
    b. Provide one normally open and one normally closed auxiliary contacts to actuate when the motor is started in any mode.
    c. Provide a minimum of one 4-20 ma analog output signal selectable to proportionally indicate drive output frequency, current, or power, or to indicate the VFD input reference/feedback signal, for monitoring by DDC

2.3 INDICATORS:

A. Indicating lamp for "POWER AVAILABLE" and for "MOTOR ON BYPASS". Lights shall be LED type.

B. Motor RPM and AMP display factory mounted on the face of the unit, either as a separate indicator or via the controller display..

2.4 SAFETIES:

A. Provide status lights or digital display indication of the cause of any shutdown.

B. The VFD shall be provided with the following safety features:

1. VFD over voltage and under voltage protection and protection against temporary power outages.
2. VFD over temperature protection.
3. Motor over temperature protection per NEC 430.126(A)(2).
4. Short circuit and ground fault protection.
5. Separate motor overload protection functional in by-pass and normal operation. For VFD's controlling multiple motors, provide overload protection for each motor.

6. Adjustable current limiter.

2.5 LABELING:

A. Provide engraved plastic labels permanently attached to the VFD panel face indicating the function of all switches and indicators, and the equipment served.

B. Tag all wiring in the drive. Tag nomenclature shall match the corresponding wire identification nomenclature indicated on the approved drive submittal.

C. For VFDs serving smoke purge, stair pressurization, or other smoke control systems, include an engraved permanently attached red faced label, minimum 6" x 6", with the following nomenclature: CAUTION: THIS VFD IS PART OF A LIFE SAFETY SMOKE CONTROL SYSTEM. NOTIFY U-M DEPARTMENT OF PUBLIC SAFETY PRIOR TO ANY CHANGE OR MAINTENANCE ACTIVITY TO THIS DRIVE.

PART 3 - EXECUTION

3.1 INSTALLATION:

A. Unit installation, including mounting and supports, and wiring to motor shall be by the Electrical Contractor, in compliance with Division 26. Coordinate with the Electrical Trades and Control Trades as required.

B. Install the VFD as close as possible to the motor. The load side power cables to the motor shall be kept as short as possible and shall not be run in the same conduit as the line side power cables. Control wiring shall be in separate conduit from power wiring. Where applicable, control wires from the motor disconnect early break contacts may be installed with the motor power wiring.

C. Protect the unit from dirt, dust, water and physical damage prior to and during construction. If the inside of the unit becomes dirty or dusty before acceptance by the University, it shall be thoroughly cleaned by the unit manufacturer at the contractor's expense.

3.2 CHECK, TEST AND START:

A. Provide the services of a factory trained and certified technician to supervise check, test and start. The contractor shall notify U of M representative 5 days in advance of the start-up.

3.3 TRAINING:

SPEC EDITOR: TRAINING IS NOT GENERALLY REQUIRED FOR VFDS WITH WHICH PLANT IS ALREADY FAMILIAR, BUT MAY BE REQUIRED FOR NEW MODELS. CONSULT THE U-M DESIGN MANAGER REGARDING IF TRAINING IS REQUIRED.

A. Conduct a minimum of 4 hours training for maintenance staff on operation, programming and service of VFDs. Training shall be conducted by a factory trained service technician.

B. Training shall not be performed until system is operational and functional and two (2) weeks after receiving approved job specific technical manuals.

END OF SECTION 220514

UNIVERSITY OF MICHIGAN
ARCHITECTURE, ENGINEERING AND CONSTRUCTION

ARCHITECTURE & ENGINEERING
326 East Hoover, Mail Stop B
Ann Arbor, MI 48109-1002
Phone: 734-764-3414
Fax: 734-936-3334

BuildingName
The Description of the Project
P00000000 0000

SPECIFICATION DIVISION 22

NUMBER SECTION DESCRIPTION

DIVISION 22 PLUMBING
SECTION 220516 - PIPE EXPANSION JOINTS

END OF CONTENTS TABLE

DIVISION 22 PLUMBING
SECTION 220516 - PIPE EXPANSION JOINTS

REVISIONS:
8-99: REVISED TO VBS.DOT TEMPLATE

2014-01-06: IMPROVED LEAD FREE REQUIRMENTS TO REFLECT U.S SAFE DRINKING WATER ACT REQUIREMENTS THAT WENT INTO EFFECT JAN. 4, 2014. D.KARLE FOR MTT.

PART 1 - GENERAL

1.1 RELATED DOCUMENTS

INCLUDE PARAGRAPH 1.1.A AND B IN EVERY SPECIFICATION SECTION. EDIT RELATED SECTIONS 1.1.B TO MAKE IT PROJECT SPECIFIC.

A. Drawings and general provisions of the Contract, Standard General and Supplementary General Conditions, Division 1 Specification Sections, and other applicable Specification Sections including the Related Sections listed below, apply to this Section.

1.2 SCOPE OF WORK:

A. Provide expansion joints per plans and specifications in the following systems.

1. Steam and Condensate Pipe
2. Heating Hot Water Piping
3. Domestic Hot Water and Recirculation Piping

1.3 QUALITY ASSURANCE

A. Manufacturers and Products: The products and manufacturers specified in this Section establish the standard of quality for the Work. Subject to compliance with all requirements, provide specified products from the manufacturers named in Part 2.

B. Reference Standards: Products in this section shall be built, tested, and installed in compliance with the specified quality assurance standards; latest editions, unless noted otherwise.

1. National Sanitation Foundation NSF/ANSI-61 (potable drinking water) and NSF-61 Annex G (listed as ≤ 0.25% weighted average lead content) (and/or NSF/ANSI-372) and Annex F. Applies to any item in contact with domestic (potable) water.
2. U.S Safe Drinking Water Act (any item in contact with domestic (potable) water).

1.4 PRICE BASIS

A. Base bid shall be based on "ADSCO" model RJ Rampack joints. Under Alternate x provide price, name and model for one other acceptable manufacturer.

PART 2 - PRODUCTS

2.1 ACCEPTABLE MANUFACTURERS:

A. For Slip Joints: ADSCO Manufacturing, Advanced Thermal Systems, Flexonics

B. For Bellows Joints: ADSCO Manufacturing Corruflex, Metraflex, Flexonics

C. For slip type (packed) expansion joints only "ADSCO" model RJ Rampack is the acceptable manufacturer and model.

2.2 GENERAL

A. Conform to the standards of the Expansion Joint Manufacturers Association and shall be pressure rated for 60 PSI for low-pressure (9 lbs.) systems and for 175 PSI for high-pressure (60 lbs.) systems.

B. Expansion joints located in heating fin tube enclosures in the copper serpentine piping shall have bronze elements and external self-guide shell, bronze sweat ends and designed for 100 pounds of working pressure unless indicated otherwise.

C. Expansion joints sizes 2" and smaller shall have screw threads, welding or sweat ends. Joints 2-1/2 " and larger shall have 150 pound ASA standard flange ends unless indicated otherwise.

D. All bellows joints shall be pre-set at the factory and "held" with removable metal clips or strips tack welded across the flanges.

E. Provide guides of the type indicated at locations indicated in the plans.

F. All slip type expansion joints to be installed in the tunnels or main utility incoming lines shall be precompressed 1", to compensate for pipe contraction.

2.3 SLIP TYPE (PACKED) EXPANSION JOINTS

(USE FOR STEAM LINES IN TUNNELS AND UTILITY WORK.)

A. Expansion joints shall be packed slip type permitting the addition of new packing while joint is in service under full line pressure, externally/internally guided, single or double as scheduled, 150 or 300 lb. with weld or flanged end with base, drain and service connections as required suitable, 600 F. maximum operating temperature, and traverse as scheduled. Single expansion joints with base shall be suitable for main anchor. The inner end of each ring shall have a limit stop to prevent slip disengagement should an anchor fail.

B. Each expansion joint shall have a minimum of four (except 6" dia. or smaller) angle type extended packing gun or other special manufacturer recommended fittings to facilitate access to difficult to reach packing locations. These special packing fittings/extenders shall match existing in tunnels. Vendors are to visit the site or obtain a copy of previous shop drawing submittal from Owner. Provide "Van Stone" floating flanges at the slip end of joints.

C. Packing shall be semi plastic injectable asbestos free Teflon based or graphite based as recommended by manufacturer of the joints for this application.

D. Provide a shut off valve in the packing manifold in addition to the check valve.

E. Where the new expansion joints replace existing joints or are being installed in an existing line, the successful Bidder's representative (before submitting shop drawings for approval) shall visit the job site and obtain necessary field data to verify pipe sizes, to match existing flange to flange dimensions and make sure the joints will physically fit and operate without relocating existing pipes. Joint base heights may have to be custom measured to suit existing pipe location. If this cannot be done the supplier shall advise the mechanical contractor, who shall include necessary funds in his bids to relocate existing pipes, adjust or replace existing supports, guides and anchors. Flanges shall be "floating flanges" type construction to eliminate bolt hole misalignment with existing matching flanges.

F. Provide a drip connection and base for expansion joint as indicated in the plans.

2.4 EXPANSION COMPENSATORS: (BELLOWS TYPE JOINTS)

SPEC EDITOR: USE THESE IN SMALL SIZE BUILDING WORK: ECONOMICAL DESIGN

A. Bellows type expansion joints for iron and steel piping for condensate system shall be constructed with two ply stainless steel bellows and carbon steel shrouds, and end fittings. ADSCO model FASSI or equal by other acceptable manufacturers.

B. Bellows type expansion joints for hot water systems with copper piping shall be constructed from 2 ply phosphor bronze bellows, brass shrouds and end fittings. All internal parts shall be of non-ferrous metal. ADSCO model FASCBB or equal by other acceptable manufacturer

2.5 BELLOWS EXPANSION JOINTS (CONTROLLED FLEXING TYPE):

(USE THIS FOR CONDENSATE, DHW, AND DHWR LINES IN TUNNELS AND UTILITY WORK)

A. Expansion joints shall be multiply stainless steel bellows (high convolute design, low convoute design is not acceptable), with mated neck rings. Bellows shall be welded with minimum number of longitudinal seams and no circumferential seams. The joints shall be single or double with center anchor base where indicated and scheduled, with Van Stone flanges and with internal sleeves(joints are to be insulated). The joints shall be rated for 125 lbs. operating pressure and 500 degree F maximum operating temperature.

PART 3 - EXECUTION

3.1 GENERAL

A. The installations shall be in strict accordance with manufacturer's instructions.

B. During the commissioning period record the initial and final position and record actual movement of the joint.

END OF SECTION 220516

UNIVERSITY OF MICHIGAN
ARCHITECTURE, ENGINEERING AND CONSTRUCTION

ARCHITECTURE & ENGINEERING
326 East Hoover, Mail Stop B
Ann Arbor, MI 48109-1002
Phone: 734-764-3414
Fax: 734-936-3334

BuildingName
The Description of the Project
P00000000 0000

SPECIFICATION DIVISION 22

NUMBER SECTION DESCRIPTION

DIVISION 22 PLUMBING
SECTION 220519 - THERMOMETERS, PRESSURE GAUGES, AND ACCESSORIES

END OF CONTENTS TABLE

DIVISION 22 PLUMBING
SECTION 220519 - THERMOMETERS, PRESSURE GAUGES, AND ACCESSORIES

REVISIONS:
2013-12-01: ADD MILJOCO, LEAD FREE FOR DOMESTIC, AND OTHER MINOR IMPROVEMENTS. D. KARLE FOR HYDRONICS/STM MTT.

2014-01-06: IMPROVED LEAD FREE REQUIRMENTS TO REFLECT U.S SAFE DRINKING WATER ACT REQUIREMENTS THAT WENT INTO EFFECT JAN. 4, 2014. D.KARLE FOR MTT.

PART 1 - GENERAL

1.1 RELATED DOCUMENTS

INCLUDE PARAGRAPH 1.1.A AND B IN EVERY SPECIFICATION SECTION. EDIT RELATED SECTIONS 1.1.B TO MAKE IT PROJECT SPECIFIC.

A. Drawings and general provisions of the Contract, Standard General and Supplementary General Conditions, Division 1 Specification Sections, and other applicable Specification Sections including the Related Sections listed below, apply to this Section.

1.2 SCOPE OF WORK:

A. Thermometers, pressure gauges, and accessories.

1.3 QUALITY ASSURANCE

A. Manufacturers and Products: The products and manufacturers specified in this Section establish the standard of quality for the Work. Subject to compliance with all requirements, provide specified products from the manufacturers named in Part 2.

B. Reference Standards: Products in this section shall be built, tested, and installed in compliance with the specified quality assurance standards; latest editions, unless noted otherwise.

1. UL Compliance: Comply with applicable UL standards pertaining to meters and gauges.
2. ASME and ISA Compliance: Comply with applicable portions of ASME and Instrument Society of America (ISA) standards pertaining to construction and installation of meters and gauges.
3. ASME/ANSI B40.1, Pressure Gauge Standard.
4. National Sanitation Foundation NSF/ANSI-61 (potable drinking water) and NSF-61 Annex G (listed as ≤ 0.25% weighted average lead content)(and/or NSF/ANSI-372)and Annex F. Applies to any item in contact with domestic (potable) water.
5. U.S Safe Drinking Water Act (any item in contact with domestic (potable) water).

PART 2 - PRODUCTS

2.1 THERMOMETERS:

SPEC EDITOR: "INDUSTRIAL" MERCURY TYPE THERMOMETERS HAVE BEEN REMOVED FROM THE MASTER SPECIFICATIONS BASED ON OSEH REQUIREMENT TO ELIMINATE UNNECESSARY USE OF MERCURY IN CONSTRUCTION.
BI-METAL THERMOMETER DELETED PER HYDRONIC TEAM MEETING 10-19-01

SPEC EDITOR: CHOOSE BETWEEN THE TWO THERMOMETERS LISTED.

A. Digital Thermometer: electronic, with LCD display and solar cell, clear plastic window, adjustable angle, separable socket.

1. Range and accuracy: -40 to 300 deg.F, accuracy greater of (+/-) 1 deg.F or 1% of reading.
2. Manufacturers: Weiss Model DVBM25 (vari-angle), Tech Controls, Miljoco Corp.

B. Industrial Glass Thermometer: adjustable angle, scale to be 9" long with white aluminum back and black graduation, aluminum casing, blue appearing liquid tube, glass window. Stem for air duct shall be 6" long with protective aluminum slotted bulb guard and mounting flange. Stem for piping shall be 3-1/2" long aluminum, brass or stainless steel, stem to match specified thermometer well. Adjust stem length for insulation extension.

1. Range and accuracy: (+/-) 1 scale div. Except where otherwise noted, select range for maximum precision for system served:
2. Manufacturers: Ashcroft, H. O. Trerice, Marsh, Weksler, Weiss, Miljoco Corp.

SPEC EDITOR: VERIFY SPECIFIED RANGE FOR EACH PROJECT

Service	Range (deg. F)
Domestic Cold Water	30-130 or 0-120
Domestic Hot Water	30-180
Chilled Water / Condenser water	30-130 or 0-120
Heating Water	30-240
All other locations	shown on drawings

C. Thermometer Wells: Brass or stainless steel, with neck extension for insulated piping, with cap and chain fastened to well. 3/4"NPT, 2 1/2" insertion length, and extension length as required to extend well to outside of insulation. Lead free when used for domestic water applications.

D. Outdoor thermometers shall be ultraviolet proof and specifically manufactured for outdoor use.

2.2 PRESSURE GAUGES

SPEC EDITOR: THIS SPEC IS GEARED TOWARD MAINSTREAM HVAC APPLICATIONS. EDIT FOR CRITICAL APPLICATION. SOME DISCUSSION ON OPTIONS FOLLOW: STAINLESS MOVEMENT IS A BIT MORE EXPENSIVE

THAN BRASS, BUT PROBABLY WORTHWHILE FOR ALL APPLICATIONS.
BRASS SOCKET IS SUITABLE FOR ALL BUT VERY AGGRESSIVE SYSTEMS. STAINLESS STEEL IS ALSO AVAILABLE.
1/2" SOCKET WORKS WELL WITH 1/2" ISOLATION AND MANIFOLD WE TYPICALLY USE - ALSO LESS PRONE TO PLUGGING THAN 1/4".
2 1/2" AND 4 1/2" ARE MOST COMMONLY USED IN THE INDUSTRY, AND SUITABLE FOR MOST LOCATIONS, EXCEPT WHERE GAUGES ARE DIFFICULT TO GET TO AND READ.
ACCURACY (OF FULL RANGE) OF 2%, 1% AND 1/2% ARE AVAILABLE. COST INCREASES SIGNIFICANTLY WITH IMPROVED ACCURACY. 1% IS REASONABLE FOR MOST APPLICATIONS. SPECIFY 1/2% FOR CRITICAL APPLICATIONS ONLY.
GLYCERIN FILL HELPS REDUCE VIBRATION AT PUMP, BUT TURNS CLOUDY ABOVE 150 DEG. F, NECESSITATING THE USE OF NEEDLE VALVES TO DAMPEN ABOVE THAT TEMP. DAMPENERS ARE NOT TYPICALLY REQUIRED. THEY PREVENT PRESSURE SURGES WITH A SMALL ORIFICE. DAMPENERS ARE PRONE TO PLUGGING UP AND ARE THEREFORE NOT TYPICALLY SPECIFIED.

A. Unless otherwise noted, provide all pressure gauges with clear glass window, cast aluminum, stainless steel or polypropylene case, black on white face, stainless steel wetted parts, brass 1/2" MPT socket, 1% full scale accuracy complying with ASME/ANSI B40-1 Grade 1A. Lead free when used for domestic water applications.

B. Water and Compressed Air Services through 2" piping (Utility/Economy): 2 1/2" diameter face, stainless steel case, brass or stainless steel 1/4" MPT socket, 2% full scale accuracy.

C. Water and Compressed Air Services over 2" piping: 4 1/2" diameter face, 6" diameter face for location more than 8 feet above floor, sealed glass window, glycerin filled for connections within 10 feet of pumps. For applications exceeding 145 deg. F, provide 316 stainless steel needle valves rated minimum 500 psi, in lieu of glycerin filled.

D. Steam Service: 4 1/2" diameter face, 6" diameter face for location more than 8 feet above floor, sealed glass window, brass or stainless steel coil siphon tube with a minimum pressure rating of 1000 psi.

SPEC EDITOR: EDIT OR DELETE THE FOLLOWING

E. Critical System Pressure Gauges: Stainless steel socket, 1/2% of full range accuracy, 6" diameter face, in accordance with AMSE/ANSI B40-1 Grade 2A. Applicable for the following locations:

SPEC EDITOR: LIST APPLICATIONS

SPEC EDITOR: EDIT OR DELETE THE FOLLOWING

F. Differential Pressure Gauges: 4 1/2" diameter face, 6" diameter face for location more than 8 feet above floor, sealed glass window, glycerin filled for connections within 10 feet of pumps. For applications exceeding 145 deg. F, provide 316 stainless steel needle valves rated minimum 500 psi, in lieu of glycerin filled. Applicable for the following locations:

SPEC EDITOR: LIST APPLICATIONS

G. Except where noted otherwise, select range for twice normal operating pressure:

Service	Range
Water (CW and HW)	0-100 psig
Steam(15#)	30" Hg vac. - 30 psig
Steam(60#)	30" Hg vac. - 100 psig
Comp. Air	0-100 psig

H. Outdoor gauges shall be ultraviolet proof and specifically manufactured for outdoor use.

I. Manufacturers: Ashcroft, H. O. Trerice, Marsh, Weksler, Weiss, Miljoco Corp.

2.3 PRESSURE/TEMPERATURE TEST PLUGS AND KITS:

A. Provide 1/4" brass pressure and temperature test plugs where shown on drawings, with two core Nordel rated for 275 degrees and 300 psig.

SPEC EDITOR: THE FOLLOWING IS NOT TYPICALLY REQUIRED, BUT CAN BE INCLUDED ON LARGE PROJECTS.

B. Provide one readout meter kit including required hoses with a minimum 3-1/2" dial differential pressure gauge. Gauge shall read 0 to 60 psig and have end connections to match both the flow valves and plugs. Included in the case shall be two pocket thermometers (25 to 125 and 0 to 220 degrees), one gauge adapter, and one pocket pressure gauge (0 to 160 psig). Meter shall become property of U of M (hand over to project engineer) after completion of work.

C. Manufacturers:

1. Plugs: Petes, Sisco, Schrader, Miljoco Corp.
2. Meter: Auto Flow, Griswold

PART 3 - EXECUTION

3.1 THERMOMETERS INSTALLATION

A. Install and orient wells and thermometers so thermometer can be read from the floor. Digital thermometers shall be located in areas with adequate light, where possible.

B. Thermometer Wells: For piping 2" and below, install in piping tee where thermometers are indicated, in vertical position. For piping below 2 1/2" and above, "weldolets" may be used. Fill well with oil or graphite and secure cap.

C. Install in the following locations and elsewhere as indicated:

SPEC EDITOR: EDIT LIST BELOW TO SUIT PROJECT REQUIREMENTS.

1. At inlet and outlet of each hydronic zone.
2. At inlet and outlet of each hydronic boiler and chiller.

3. At inlet and outlet of each hydronic coil in air-handling units over 5000 cfm.
4. At inlet and outlet of each hydronic heat exchanger.
5. At inlet and outlet of each hydronic heat recovery unit.
6. At inlet and outlet of each thermal storage tank.
7. At outside air intake ductwork.
8. At mixed air plenums.
9. At hot/cold deck plenums.
10. At each zone supply duct of multi-zone systems.
11. At supply duct of single zone systems.

3.2 INSTALLATION OF PRESSURE GAUGES

A. Install pressure gauges with 1/2" isolation ball valve. Where needle valves are specified as a substitute for glycerin filled in Part 2, install the needle valve between the ball valve and the gauge. Locate gauges to be readable from the floor preferably at eye level. Mount gauges securely to prevent excessive vibration, adjust needle valve to dampen pulsations. Install syphon tubes for steam pressure gauges, connected after the isolation ball valve. Do not install pressure gauges on bottom of piping.

SPEC EDITOR: EDIT LIST BELOW TO SUIT PROJECT REQUIREMENTS.

B. Install in the following locations, and elsewhere as indicated on drawings:

1. At suction and discharge of each pump.
2. At inlet and outlet of each pressure-reducing valve.
3. At building water service entrance.
4. At inlet and outlet of hydronic equipment (HW boilers, chillers, heat exchangers, filters).

3.3 INSTALLATION OF TEST PLUGS

A. Test Plugs: Install in piping tee where indicated, located on pipe at most readable position. Secure cap.

3.4 ADJUSTING AND CLEANING

A. Adjusting: Adjust faces of meters and gauges to proper angle for best visibility.

B. Cleaning: Clean meters and gauges. Replace cracked and broken windows. Touch up scratches.

END OF SECTION 220519

UNIVERSITY OF MICHIGAN
ARCHITECTURE, ENGINEERING AND CONSTRUCTION

ARCHITECTURE & ENGINEERING
326 East Hoover, Mail Stop B
Ann Arbor, MI 48109-1002
Phone: 734-764-3414
Fax: 734-936-3334

BuildingName
The Description of the Project
P00000000 0000

SPECIFICATION DIVISION 22

NUMBER SECTION DESCRIPTION

DIVISION 22
SECTION 220523 - VALVES

END OF CONTENTS TABLE

DIVISION 22
SECTION 220523 - VALVES

REVISIONS:
07-17-08 REVISED TO INDICATE DOM. H.P. B.F. TO BE STAINLESS, ALL LOCATIONS (NOT JUST TUNNELS) AND TO ELIMINATE "STANDARD" B.F. VALVE SPEC.

09-16-08: REVISED PREFERRED MANUFACTURERS FOR HP BUTTERFLY VALVES, ADDITIONAL UTILITY TUNNEL REQUIREMENTS AND P/FP MECH TECH TEAM EDITS.
1-09: RECONCILED EDITS BETWEEN 7/08 AND 9/08 REVISIONS, AND ADDRESSED OTHER MINOR ISSUES.

7-19-12: ADDED (2.2.B) THAT SEALS ARE TO BE IMMUNE FROM CHLORAMINES AND THAT ALL EPDM IS TO BE PEROXIDE CURED. D. KARLE FOR PLMG MTT.

07-30-13: REVISED TO UPDATE TUNNEL REQUIREMENTS. D. KARLE PER WAYNE GROTH AND HYDRONICS MTT.

2013-12-17: REMOVED KEYSTONE AS APPROVED FOR HP BF VALVES DUE TO ON-GOING SHUT-OFF PROBLEMS REPORTED BY PLANT, D. KARLE FOR MTT.

2014-01-06: IMPROVED LEAD FREE REQUIRMENTS TO REFLECT U.S SAFE DRINKING WATER ACT REQUIREMENTS THAT WENT INTO EFFECT JAN. 4, 2014. D.KARLE FOR MTT.

2014-2-28: REVISED TO STRIKE BALL VALVE MODEL NUMBERS, WHICH WERE OUTDATED. JOMAR REMOVED PENDING REVIEW OF THEIR BRASS BALL VALVE OFFERING (JOMAR DOES NOT OFFER BRONZE BALL VALVES). JAMESBURY REMOVED, DON'T OFFER BALL VALVES OF TYPE SPECIFIED. D. KARLE FOR MTT.

2014-12-15: REVISED TO STRIKE BALL VALVE MFR.S NO LONGER APPROVED OR AVAILABLE, ADD SPECIFIC JOMAR MODEL NUMBER BALL VALVE AS APPROVED, STRIKE GRINNELL GHP SINCE IS THE SAME VALVE AS THE KEYSTONE THAT HAS PROVEN UNRELIABLE, AND RESTRICTED USE OF LEAD FREE VALVES TO POTABLE WATER SYSTEMS ONLY DUE TO SOLDERING CHALLENGES. D. KARLE FOR MTT.

2015-06-30: CLARIFIED THAT GROOVED BUTTERFLY VALVES ARE ONLY PERMITTED WHEN SPECIFICALLY INDICATED, H.P. BUTTERFLY VALVES ARE REQUIRED OTHERWISE, INCLUDING IN GROOVED PIPING. D. KARLE FOR PLMG. MTT.

2017-02-08: ADDED APPROVED MFRS - ABZ FOR HP B'FLY, VANESSA FOR METAL SEATED B'FLY AND APOLLO FOR GATE/GLOBE/CHECK. B. BEGG FOR PLMG. MTT.

2018-01-31: REVISED JOMAR BALL VALVE MODEL NUMBER, EXACT SAME VALVE PER JOMAR INCLUDING MATERIALS, THE MODEL NUMBER WAS ONLY UPDATED TO REFLECT ADDITIONAL LISTINGS. D. KARLE AS APPROVED BY PLMG. MTT.

PART 1 - GENERAL

1.1 RELATED DOCUMENTS

INCLUDE PARAGRAPH 1.1.A AND B IN EVERY SPECIFICATION SECTION. EDIT RELATED SECTIONS 1.1.B TO MAKE IT PROJECT SPECIFIC.

A. Drawings and general provisions of the Contract, Standard General and Supplementary General Conditions, Division 1 Specification Sections, and other applicable Specification Sections including the Related Sections listed below, apply to this Section.

1.2 SCOPE OF WORK:

A. Provide valves as scheduled and specified for the following systems:

1. Cold Water, Hot Water, Hot Water Return
2. High Purity Water
3. Compressed Air
4. Lab Vacuum
5. Natural Gas
6. Hot Water Heating, Chilled Water, Condenser Water
7. Steam and Condensate
8. Others as indicated

1.3 QUALITY ASSURANCE:

A. Manufacturers and Products: The products and manufacturers specified in this Section establish the standard of quality for the Work. Subject to compliance with all requirements, provide specified products from the manufacturers named in Part 2.

B. Reference Standards: Products in this section shall be built, tested, and installed in compliance with the specified quality assurance standards; latest editions, unless noted otherwise.

1. National Sanitation Foundation NSF/ANSI-61, including Annex G (listed as ≤ 0.25% weighted average lead content)(and/or NSF/ANSI-372)and Annex F. Applies to any item in contact with domestic (potable) water.
2. U.S Safe Drinking Water Act (any item in contact with domestic (potable) water).

PART 2 - PRODUCTS

2.1 VALVE APPLICATION SCHEDULE:

SPEC EDITOR: EDIT 2.1 CAREFULLY TO SUIT PROJECT. CONSIDER USE OF LESS EXPENSIVE STANDARD BUTTERFLY VALVES FOR CW, HW, CHW AND HWH. COORDINATE VALVE SELECTION WITH PLANT. ADD SOLENOID VALVES UNDER SPECIALTY VALVES IF APPLICABLE, CONSIDER USE OF GROOVED BUTTERFLY VALVES. EDIT BALANCING VALVES TO SUIT PROJECT.

A. Cold Water, Hot Water and Hot Water Return System:

Isolation through 2": Ball Valve

Isolation 2 1/2" and larger: High Performance Butterfly Valve, All stainless steel.
Check: Swing Check through 2", Silent Check for 2 1/2" and up.
Balancing: Automatic Balancing Valve, Manual Balancing Valve

SPEC EDITOR: SWING CHECK ARE NOT ACCEPTABLE IN UTILITY TUNNELS. ONLY SILENT CHECKS SHALL BE USED IN TUNNELS, FOR ALL SIZES.

SPEC EDITOR: ADD/ DELETE SPECIALTY VALVES IF APPLICABLE

Specialty Valves:

B. High Purity Water Systems (deionized, reverse osmosis, distilled):

Isolation: High Purity Water Valve

C. Compressed Air System,
Lab Vacuum System:

Isolation through 2": Ball Valve
Isolation 2 1/2" and larger: High Performance Butterfly Valve
Check: Swing Check Valve

D. Natural Gas System:

Isolation through 2": Ball Valve certified by UL or CSA for natural gas.
Isolation 2 1/2" and larger: Lubricated Plug Valve (Section 231123)

SPEC EDITOR: INSERT BELOW, THE REQUIREMENT FOR UNDERGROUND CHILLED WATER VALVES. IF INCLUDED IN A SEPARATE SPECIFICATION SECTION FOR UNDERGROUND CHW PIPING, REFERENCE THAT SPEC. SECTION.

E. Hot Water Heating System,
Chilled Water System,
Condenser Water System:

Isolation through 2": Ball Valve
Isolation 2 1/2" and larger: High Performance Butterfly Valve
Isolation - Underground chilled water:
Check: Swing Check through 2", Silent Check for 2 1/2" and up.
Balancing: Automatic Balancing Valve, Manual Balancing Valve

F. Steam and Condensate System (through 60 psig):

SPEC EDITOR: ON STEAM SYSTEMS, A WARM-UP BYPASS VALVE SHOULD BE INSTALLED ON SIZES 3" AND LARGER IN TUNNELS AND WHERE REQUIRED IN BUILDINGS (8" OR HIGHER) DUE TO DOWNSTREAM PIPING CONFIGURATIONS. COORDINATE WITH SECTION 232216 AND AVOID DUPLICATION OF SPECIFICATIONS FOR THE SAME APPLICATION.

METAL-TO-METAL BUTTERFLY VALVES ARE SPECIFIED FOR ALL STEAM SYSTEMS 2-1/2" AND LARGER, BASED ON THE ASSUMPTION THAT MOST STEAM SYSTEMS IN BUILDINGS ARE CONNECTED TO THE CENTRAL CAMPUS UTILITY TUNNEL SYSTEM AND SHOULD BE RATED FOR 600°F. IF YOUR PROJECT DOES NOT USE STEAM FROM THE UTILITY TUNNEL SYSTEM, A HIGH PERFORMANCE BUTTERFLY VALVE (RATED 150 PSIG/450°F) ILO A METAL-TO-METAL MAY BE MORE APPROPRIATE; EDIT SPEC ACCORDINGLY.

Isolation through 2": Ball Valve

Isolation through 2" in Utility Tunnels: Gate Valve - Steel body with stainless steel trim.
Isolation 2 1/2" and larger: Metal-to-Metal Seated Butterfly Valve
Check (condensate only): Swing Check through 2", Silent Check for 2 1/2" and up. In Utility Tunnels, only Silent Checks shall be provided for all sizes.
Other valves in 232216, as specified.

SPEC EDITOR: SWING CHECK VALVES ARE NOT ACCEPTABLE IN UTILITY TUNNELS. ONLY SILENT CHECKS SHALL BE USED IN TUNNELS, FOR ALL SIZES.

2.2 GENERAL VALVE REQUIREMENTS:

A. All valves shall have seats, stem seals and disc materials compatible with intended fluid, temperature, pressure and service.

B. All EPDM shall be peroxide cured. All wetted seals shall be made from materials that are immune from chloramine degradation.

C. Valves in contact with domestic (potable) water shall be "lead free" NSF/ANSI-61 Annex G (and/or NSF/ANSI-372) labeled. Soldered lead free valves (all types) are restricted to use on domestic potable water systems only.

D. Manually operated valves 4" and larger installed 10 feet A.F.F., or higher, shall have chain wheel operators. Chain shall reach to within 7'-0" of floor or operating platform, or within two feet of accessible ceiling.

E. Gate and globe valves shall be repackable under pressure whether open or closed.

F. Unless noted otherwise, valves shall be rated for a minimum of 125# WSP (working steam pressure)/ 250# WOG (cold water, oil, gas).

G. Unless noted otherwise, all butterfly valves shall be full lug construction, suitable for bi-directional dead end service, and have open position memory stop. Manually operated butterfly valves 4" and larger shall have enclosed worm gear operators with position indicators.

H. Provide extended valve stems for insulated piping.

I. Where the valves are installed outdoors, all components including the gear operated wheel operators shall be weatherproofed.

J. Unless noted otherwise, valves through 2" shall have screwed connections for steel piping and sweat connections for copper piping; valves 2-1/2" and larger shall be flanged. Grooved connections are permitted where specified.

K. Unless noted otherwise, valves shall be same size as piping.

2.3 BALL VALVE:

A. Two-piece, full port, bronze body, stainless steel ball and stem, Teflon seat, plastic coated lever handle and locking devices where noted in drawings.

1. Valves for Natural Gas shall be UL or CSA approved for natural gas service.

B. Manufacturers: Watts, Nibco, Apollo, Milwaukee, Hammond, Grinnell (Grinnell permitted only where grooved connections permitted). Also approved: Jomar Valve model T/S-100CG with CW511L brass alloy body and end connection and CW510L brass alloy ball and stem and T.E.A. coated ball.

2.4 HIGH PERFORMANCE BUTTERFLY VALVE:

SPEC EDITOR: STANDARD FOR MOST ISOLATION VALVES 2 1/2" AND LARGER. NOTE, STANDARD BUTTERFLY VALVES ARE NOT TYPICALLY ACCEPTABLE, AND HAVE BEEN REMOVED FROM THIS MASTER SPECIFICATION.

A. Full lug, high performance type, carbon steel body, 316 stainless steel disc, stainless steel shaft and bearing, PTFE seat, Teflon stem packing. Rated for 150 psi, 450 degrees F.

SPEC EDITOR: REMOVE BRAY ON ALL CENTRAL POWER PLANT PROJECTS.

B. Manufacturers: Bray – Braylok Series 41, Dezurik - BHP, Jamesbury - 815L, Milwaukee - HP Series, Tri-Seal Valve-Contromatics (formerly Watts/KF Contromatics), Xomox Pliaseal, ABZ ABZolute Seal Series 400.

C. For domestic water systems, full lug, high performance type, 316 stainless steel body, 316 stainless steel disc, stainless steel shaft and bearing, (all wetted parts stainless steel) PTFE seat, Teflon stem packing. Rated for 150 psi, 250 degrees F.

2.5 BUTTERFLY VALVE - GROOVED:

SPEC EDITOR: FOR USE WITH GROOVED PIPING, NOT OUR STANDARD, USE ONLY UNDER SPECIAL CONDITIONS. NORMALLY HIGH PERFORMANCE BUTTERFLY VALVES ARE TO BE USED, EVEN IN GROOVED PIPING SYSTEMS, THEREFORE THIS SECTION SHOULD BE DELETED IN MOST CASES. SELECT APPLICABLE SECTION BELOW IF USED. GRINNELL IS NOT ON PREFERRED LIST OF MANUFACTURERS YET. NOT FOR USE IN TUNNELS

A. Grooved ductile iron body, suitable for installation with grooved piping, EPDM coated steel disc and shaft, stainless steel hub bearing, EPDM seat, Teflon stem packing. Rated for 300 psi, 230 degrees F.

Manufacturer: Victaulic Vic-300

B. Grooved Nylon coated ductile iron body, EPDM coated ductile iron disc, stainless steel shaft, bronze shaft bearing. MSS SP-67

Manufacturer: Grinnell Gruvlock Series 7700.

C. Grooved butterfly valves may be used only within grooved piping systems and only when specifically noted as permitted on the project drawings. Otherwise, high performance butterfly valves shall be provided, including for grooved piping systems.

2.6 HIGH PERFORMANCE METAL-TO-METAL SEATED BUTTERFLY VALVE:

A. Full lug or short body flanged for end-of-line dead end service, bi-directional shutoff, triple offset type, single piece carbon steel body per ANSI B16.5 flange dimensions, carbon or stainless steel hardened abrasion-resistant disc keyed to stem with self-centering feature, stainless steel stem, hardened heavy duty stainless steel bearings with line debris ingress protection feature, stainless steel or Inconel seat and seal, bolted replaceable elastically resilient seal, high-temp graphite stem packing with blow-out proof design and adjustable gland. Pressure Class 150 rated for 140 psig, 600 degrees F. per ANSI/ASME B16.34. Valve tested for minimum 5000 cycles, with initial bubble-tight, zero leakage closure classification per FCI 70-2 or equivalent testing and fabricated per ISO 9001 QA program protocols. Operator to be lockable, low operational torque fully enclosed lifetime lubricated worm gear type, keyed to shaft with local position indicator, size based on seating and break away safety factor. Valve warranty shall be 36 months from substantial completion . Mounting taps to be tapered to aide bolt threading. Body to have quantity (4) tapped holes equally spaced around the body for mounting threaded lifting lugs to aide installation.

B. Valve Flow Capacity: The minimum Cv value for various valve sizes in the full open position shall be as follows:

1. 4 inch: 230
2. 6 inch: 660
3. 8 inch: 1500
4. 10 inch: 2400
5. 12 inch: 3600
6. 14 inch: 5500
7. 16 inch: 7600
8. 18 inch: 10300
9. 20 inch: 13000
10. 24 inch: 20200

C. Manufacturers: Bray Trilok, Crane Flowseal MS, Metso/Neles Neldisc, Adams MAK, ABZ Extreme 6000 Series, Vanessa, Weir Tricentric, Zwick Tri-Con.

2.7 GATE VALVE - (FOR 2" AND SMALLER ONLY):

A. General Service: Bronze body and trim, screwed, rising stem. de-zincification resistant.

1. Description:
   a. Standard: MSS SP-80
   b. CWP Rating: 300 psig
   c. SWP Rating: 150 psig
   d. Body Material: Bronze ASTM B 62
   e. Ends: Threaded
   f. Stem: Silicon Bronze
   g. Disc: Solid wedge, Bronze ASTM B 62
   h. Packing: Asbestos free
   i. Bonnet: screw in style, Bronze ASTM B 62
   j. Handwheel: Malleable Iron

k. For domestic water service: Per above, accept with non-rising stems and rated 200 psig CWP at 300°F. Solder end connections to 3/4 inch size, threaded ends for 1 inch and above.

2. Manufacturers: Nibco T-131 (T/S-113-LF lead free), Apollo, Crane, Grinnell, Stockham.

B. Utility Tunnel Locations: Class 150 Steel Body Gate Valves with stainless steel trim.

1. Description:
   a. ANSI Class 150 OS&Y Bolted Bonnet ASTM A 105 steel body, 13 Chrome Trim, hard-faced seats, graphite packing.
   b. Manufacturers:
      1) Crane Co.; Crane Valve Group; Crane Valves.
      2) Vogt.

2.8 SWING CHECK VALVE:

SPEC EDITOR: ***TYPICALLY USED FOR ALL SERVICES, 2" AND UNDER, SWING CHECK VALVES ARE NOT ACCEPTABLE FOR UTILITY TUNNELS***

A. Bronze body and trim.

B. Manufacturers: Milwaukee model 509, Crane model 37, Grinnell model 3300, Nibco, Apollo

2.9 SILENT CHECK VALVE:

SPEC EDITOR: ***TYPICALLY USED FOR ALL SERVICES, 2 1/2" AND OVER***

A. Spring loaded type check valves, stainless steel spring, iron body, and bronze trim.

B. Manufacturers:

1. Wafer Style: Milwaukee - Series 1400, APCO - Series 300, Mueller, Metraflex
2. Globe Style: Milwaukee, APCO, Mueller, Metraflex, Apollo
3. Utility Tunnels:
   a. Durabula model SCV, stainless body
   b. Steam Trap Assemblies: "The Connector" by Check-All Mfg. Company, 316 stainless steel body and trim.
4. Condensate pump and pressure powered pump discharge: Durabula model SCV, stainless body

2.10 DRAIN VALVE:

A. General Service: Ball valve with 3/4-inch hose threaded end fitting and cap.

B. Utility Tunnels:

1. Steam and condensate: Gate valve with 3/4-inch hose end fitting and cap.
2. Domestic hot water and compressed air: ball valve with 3/4-inch hose threaded end fitting and cap.

2.11 AUTOMATIC BALANCING VALVE:

SPEC EDITOR: THIS SECTION STILL NEEDS SOME WORK - EDIT CAREFULLY

A. Automatic flow control, pressure independent type, +/- 5 percent accuracy. 304 stainless steel cartridge, two P/T ports for flow reading. Valve size shall match pipe size. Refer to drawings for flow and pressure range.

B. Manufacturers: Griswold Ultra "Z", Autoflow, Bell and Gossett

2.12 MANUAL BALANCING VALVES:

SPEC EDITOR: THIS SECTION STILL NEEDS SOME WORK - EDIT CAREFULLY

A. General Manual Balancing Valve Requirements: ports for measuring flow, memory stop, bubble tight shut-off, valve Cv characteristics suitable for throttling. Size valve to produce readable design flow and maximum full open pressure drop of 3 feet.

B. Through 2": bronze body, brass ball, calibrated.
Manufacturers: Bell & Gossett Circuit Setter Plus, Armstrong, Flow Design Inc., TACO, T&A

C. Valves 2-1/2"and larger: cast iron body, brass ball or bronze disc, TFE seat rings, bronze seat, and stainless steel stem.
Manufacturers: Bell & Gossett Circuit Setter, Armstrong, Flow Design Inc., TACO, T&A

SPEC EDITOR: VERIFY PRESSURE DROPS AT DESIGN FLOWS AND INSURE THEY ARE MEASURABLE, IF NOT USE THE FOLLOWING.

D. Venturi Style: bronze body, brass ball, and venturi flow measuring station. Manufacturers: Preso B Plus, Accusetter

E. Provide gauge kit for projects requiring over 20 balancing valves. Gauge kits shall be capable of directly reading GPM, or shall include conversion chart from Cv and pressure.

2.13 HIGH PURITY WATER VALVE:

A. Union body ball valve with Teflon seat and viton stem packing. Construction, material, pipe connections and size to match piping.

B. Manufacturers: Harvel Plastics, Hayward, Watts

2.14 SOLENOID VALVES:

A. Full port, bronze body, malleable iron coil enclosure, stainless steel plunger, valve stem, bonnet tube, and spring, Buna-N seal, rated for 500 psi. See drawings for voltage, size and position (NC or NO).

B. Manufacturer: Magnetrol Figure No. 200-A, ASCO, Skinner

PART 3 - EXECUTION

3.1 GENERAL VALVE INSTALLATION REQUIREMENTS:

A. Install valves such that operator is completely operable, and the valve position indicator is discernible from the floor.

3.2 SOLENOID VALVE INSTALLATION REQUIREMENTS:

A. Provide a strainer before each solenoid valve. Provide a water hammer arrestor upstream of solenoid valves used for water service.

3.3 NATURAL GAS VALVE INSTALLATION REQUIREMENTS:

A. Install valves in accessible locations, protected from physical damage. Do not locate valves in plenum ceilings.

B. Install isolation valve upstream and within 6 feet of gas appliance. Install a union or flanged connection downstream from the valve to permit removal of controls.

3.4 STEAM, CONDENSATE AND DOMESTIC HOT WATER VALVE INSTALLATION:

A. For general service applications: steam and condensate flanged valves shall be installed with Flexitallic gaskets, 316 L stainless steel, with "Flexicarb" filler.

B. For general service applications: domestic hot water flanged valves shall be installed with 100% PTFE gaskets, Interlex SQ-S.

C. For Utility Tunnels: Domestic hot water flanged valves shall be installed with Garlock Blue-Gard Style 3000 ring type gaskets or comparable. Full face gaskets allowed only when BOTH flanges are full face.”

D. For Utility Tunnels: steam and condensate flanged valves shall be installed with Flexitallic gaskets, 316 L stainless steel, with "Flexicarb" filler. Steam butterfly valves with removable seat screw heads that would interfere with the metal strip winding shall be installed with Garlock Style 9800 gaskets on the seat screw head side.

END OF SECTION 220523

UNIVERSITY OF MICHIGAN
ARCHITECTURE, ENGINEERING AND CONSTRUCTION

ARCHITECTURE & ENGINEERING
326 East Hoover, Mail Stop B
Ann Arbor, MI 48109-1002
Phone: 734-764-3414
Fax: 734-936-3334

BuildingName
The Description of the Project
P00000000 0000

SPECIFICATION DIVISION 22

NUMBER SECTION DESCRIPTION

DIVISION 22 PLUMBING
SECTION 220533 - HEAT TRACING FOR PIPING

END OF CONTENTS TABLE

DIVISION 22 PLUMBING
SECTION 220533 - HEAT TRACING FOR PIPING

REVISIONS:
2-24-00: MINOR CORECTIONS, APROVED AS NEW MASTER.

SPEC EDITOR: SCOPE OF HEAT TRACING MUST BE SHOWN ON THE DRAWINGS. CAREFULLY SELECT REQUIRED HEAT TRACE,SCHEDULE AND DETAIL ACCORDINGLY.

PART 1 - GENERAL

1.1 RELATED DOCUMENTS

INCLUDE PARAGRAPH 1.1.A AND B IN EVERY SPECIFICATION SECTION. EDIT RELATED SECTIONS 1.1.B TO MAKE IT PROJECT SPECIFIC.

A. Drawings and general provisions of the Contract, Standard General and Supplementary General Conditions, Division 1 Specification Sections, and other applicable Specification Sections including the Related Sections listed below, apply to this Section.

1.2 SCOPE OF WORK

A. Furnish and install a complete UL listed system of heaters, components, and controls to prevent pipelines from freezing. Refer to drawings for additional scope clarification.

1.3 COORDINATION

SPEC EDITOR: COORDINATE ELECTRICAL REQUIREMENTS WITH DIV. 26

A. The heat tracing and all the necessary accessories shall be furnished and installed by the Mechanical Contractor. Electrical Contractor shall provide power supply and related wiring by the per Division 26, and as shown on electrical drawings.

1.4 MANUFACTURERS

A. Raychem

B. Thermon

PART 2 - PRODUCTS

2.1 MATERIAL

A. Electric heat tracing shall be self-limiting type suitable for temperature maintenance up to 40 degrees F.

B. The heater shall have a self-regulating factor of at least 90 percent. (the percentage reduction, without thermostatic control, of the heater output going from 40 degrees F pipe temperature operation to 150 degrees F pipe temperature operation).

SPEC EDITOR: COORDINATE ELECTRICAL REQUIREMENTS WITH DIV. 26, EDIT VOLTAGE

C. The heater shall operate on line voltages of (select: 120, 208 or 220) volts without the use of transformers.

D. The heater shall be sized according to this table. The required heater output rating is in watts per foot at 50 degrees F. (Heater selection based on 1" fiberglass insulation on metal piping).

Pipe Size	Min. Ambient - 10 deg.F	Temp. - 20 deg. F
3" or less	5 watt	5 watt
4"	5 watt	8 watt
6"	8 watt	8 watt
8	2 strips - 5 watt	2 strips - 8 watt
12" - 14"	2 strips - 8 watt	2 strips - 8 watt

E. Connectors and fittings, and indicator lights, and other required installation accessories shall be manufacturers standard recommended for the freeze protection application. The heater shall include a tinned copper braided shield, electrically bonded at splice locations, and bonded to the branch circuit ground conductor at the power connection point.

F. All the components and system shall be U. L. listed.

2.2 ELECTRICAL PROTECTION

A. Provide ground fault circuit breakers or other ground fault protection with a 30 mA ground fault trip level. See Division 26 for more details.

2.3 CONTROLS

A. Provide heater system controls indicated below, and as shown in the drawings:

SPEC EDITOR: EDIT LIST AND COORDINATE WITH DETAILS

1. Outdoor air thermostat control to prevent operation when outside air temperature is above 40F (adjustable).

SPEC EDITOR: PLANT A/C SHOP PREFERS TO HAVE A DDC ALARM, BUT WILL ACCEPT LOCAL ALARM IF IT IS LIKELY TO BE OBSERVED. COORDINATE WITH A/C SHOP.

2. Heater failure alarm, using outdoor piping thermostats, and voltage detectors, with audible and visual alarm and alarm contact for remote monitoring by the owner's Energy Management System.

PART 3 - EXECUTION

3.1 INSTALLATION

A. The entire installation shall comply with the manufacturer's instructions and all the applicable sections of NEC, latest edition.

B. The electrical and mechanical installation details shall strictly adhere to manufacturer's recommended practices. The manufacturer's representative shall supervise and test the installation and provide a letter to the Owner that the entire installation complies with their requirements, and the installation tested out satisfactorily.

3.2 TESTS

A. After heater installation and before and after installing the thermal insulation, subject heater to testing using a 1000 VDC megger. Minimum insulation resistance shall be 20 megohms regardless of length. Test both heating cable bus wires to verify the connection of any splices or tees.

B. After all megger testing and insulation is complete, manufacturer shall conduct functional performance test to ensure system is fully operational, and submit report.

END OF SECTION 220533

UNIVERSITY OF MICHIGAN
ARCHITECTURE, ENGINEERING AND CONSTRUCTION

ARCHITECTURE & ENGINEERING
326 East Hoover, Mail Stop B
Ann Arbor, MI 48109-1002
Phone: 734-764-3414
Fax: 734-936-3334

BuildingName
The Description of the Project
P00000000 0000

SPECIFICATION DIVISION 22

NUMBER SECTION DESCRIPTION

DIVISION 22 PLUMBING
SECTION 220548 - VIBRATION CONTROL

END OF CONTENTS TABLE

DIVISION 22 PLUMBING
SECTION 220548 - VIBRATION CONTROL

REVISIONS:
8-99: REVISED TO VBS.DOT TEMPLATE
9-1-99: "INSTRUCTIONS AND TERMS" DELETED, "SUBMITTALS" MOVED TO DIVISION 01, AND OTHER MINOR CHANGES WERE MADE.
2-17 REVISIONS/ SIGNIFICANT CHANGES

PART 1 - GENERAL

1.1 RELATED DOCUMENTS

INCLUDE PARAGRAPH 1.1.A IN EVERY SPECIFICATION SECTION.

A. Drawings and general provisions of the Contract, Standard General and Supplementary General Conditions, Division 1 Specification Sections, and other applicable Specification Sections including the Related Sections listed below, apply to this Section.

1.2 SCOPE OF WORK:

SPEC EDITOR: THIS SECTION SHOULD BRIEFLY DESCRIBE ALL THE MECHANICAL WORK TO ENABLE POTENTIAL SUBCONTRACTORS TO DECIDE WHETHER OR NOT TO OBTAIN A FULL SET OF DOCUMENTS AND TO BID. PARTICULAR CARE SHOULD BE USED WHEN SELECTING VIBRATION ISOLATION TYPES FOR HIGHLY VIBRATION SENSITIVE BUILDINGS

A. Provide vibration control items for isolating vibration of mechanical equipment, piping and ductwork.

B. Provide all hangers, isolators, bases, pads, sleeves and other devices specified, required, or detailed for the project. Include all vibration isolation system elements as recommended by the equipment manufacturer's representative to make a complete, correct and safe installation. Supply and install all incidental materials needed.

1.3 QUALITY ASSURANCE

A. Work of this section shall be performed by skilled workers who are experienced in the necessary crafts to meet the requirements of this Section.

B. Provide field supervision and inspection to assure proper installation, adjustment and performance. Replace any isolators that are found to resonate with the supported equipment.

C. As a minimum provide vibration control per ASHRAE - 2015 - HVAC Applications, Chapter 48 - "Sound and Vibration Control".

D. Isolators shall be selected, installed and adjusted to prevent the transmission of objectionable vibration and noise to the building structure.

E. The size and number of mounts and hangers shall be chosen to meet these specifications, even if not specifically shown on the plans. Brackets, rails, bases, braces, etc., shall be provided as needed for a complete and correct installation.

1.4 ACCEPTABLE MANUFACTURERS

A. Subject to compliance with the Contract Documents, manufacturers for products specified in this Section shall be one of the following:

1. Vibration Eliminator Co.
2. Mason Industries, Inc.
3. Kinetics Noise Control
4. Vibration Mounting and Controls (VMC)

PART 2 - PRODUCTS

2.1 FLEXIBLE DUCT CONNECTIONS

A. Flexible sleeves for duct connections shall be fabricated from flexible, airtight, coated fabric. Each sleeve shall be installed with at least 3 inches slack across a clear metal to metal gap of at least 4 inches. That is, 7 inches of this fabric is required for each sleeve.

2.2 FLEXIBLE PIPE CONNECTORS

A. Flexible connectors for pipes shall be neoprene Mason Type MFNC, MFTNC or as approved.

2.3 FLEXIBLE METAL HOSE CONNECTORS:

USE THIS IN HOT WATER, STEAM, CONDENSATE AND REFRIGERATION SYSTEMS AS REQUIRED

A. Length and end fittings as shown in drawings, with an inner corrugated hose made of type 304, 321, or 316 stainless steel and outer braid made of 304 stainless steel. Manufacturers: Metraflex, Flex Hose Co., Flexonics, Mason.

B. For copper piping systems, use copper construction braided hoses. Approved Manufacturers: Anaconda, Flex Hose Co., Flexonics, Mason, Metraflex

SPEC EDITOR: USE THE FOLLOWING ARTICLES FOR TUNNELS ONLY

2.4 FLEXIBLE METAL HOSE CONNECTORS FOR TUNNELS:

A. For steel piping systems, length and end fittings as shown in drawings, with an inner corrugated hose made of type 316 stainless steel and outer braid (double braided) made of 316 stainless steel. Dual floating flanges or one fixed and one floating flange may be used. Manufacturers: Metraflex, Flex Hose Co., Flexonics, Mason.

B. For copper piping systems, (up to 2" in size) use copper construction braided hoses. Manufacturers: Anaconda, Flex Hose Co., Flexonics, Mason, Metraflex. For sizes 2½" above, all stainless steel with an inner corrugated hose made of type 316 stainless steel and outer braid made of 316 stainless steel, with stainless steel flanges. Dual floating flanges or one fixed and one floating flange may be used. All wetted parts shall be stainless steel. Approved Manufacturers: Metraflex, Flex Hose Co., Flexonics, Mason.

2.5 FLEXIBLE CONNECTORS (RUBBER):

SPEC EDITOR: USE THIS IN LARGE PUMP SYSTEMS

A. Flexible connectors with neoprene and nylon type elements, with carbon steel or ductile iron floating flanges. Rated for 150 psig working pressure at 200°F, with peroxide cured EPDM liner and cover, ultraviolet resistant, hand wrapped, non-molded, multiple arch body, with control rods or cables. Approved Manufacturers: Mason Industries, Inc. Type SFDEJ, Mercer Rubber Co., Metraflex Type DS.

2.6 INERTIA BASES

A. All mounts shall have leveling bolts rigidly secured to the equipment being isolated.

B. Provide vibration isolation bases as indicated in the table in section 3.2.

C. Base Type A

1. Floor mounted equipment that is mounted directly to the floor, no inertia base is required.

D. Base Type B

1. Inertia base Type B (Steel Inertia Base) shall be a structural steel base frame with clearance holes located to correspond to the mounting bolt holes of the equipment mounted on the base.
2. Bases shall have built-in motor slide rails and shall be reinforced as necessary to withstand belt pull without drive misalignment or base distortion. The bases shall be constructed with deep angle steel sections with a minimum vertical angle leg of 4 inches for motors of 7.5 hp or less, 5 inches for motors between 7.5 hp and 20 hp and 6 inches for motors over 20 hp.
3. Mason Industries Type WFSL with unhoused spring isolators SL, or approved equal.

E. Base Type C

1. Inertia base Type C (Concrete Inertia Base) shall have an integral rectangular structural steel form into which concrete is poured. Perimeter members shall be beams of depth equal to 10% of the longest span of the base, but not more than 12 inches nor less than 6 inches deep. Forms shall include motor slide base and all reinforcing steel. Where anchor bolt locations fall in concrete, the reinforcing steel shall include drilled members with sleeves welded below the steel to accept the anchor bolts. Height saving steel brackets shall be used in all mounting locations.

2. When the concrete base in "T" shaped, isolators shall be located under the projections as well as under the main body in order to prevent cantilever distortion.
3. Mason Industries Type BMK/KSL with unhoused spring isolators SL or approved equal.

2.7 VIBRATION ISOLATORS

A. The static deflection of isolators shall be as specified below and in ASHRAE - 2015 Chapter 48.

B. Vibration isolator sizes and layout shall be determined by the vibration isolator supplier.

C. Provide vibration isolator types as indicated in the table in section 3.2.

D. Isolator Mount Type 1

a. Type 1(Waffle Pads) shall be 3/8 inch thick neoprene pads ribbed or waffled on both sides. The pads shall be manufactured with quality neoprene and selected for a maximum durometer of 50 and designed for 15% strain. Where required, steel load-spreading plates shall be incorporated between the equipment and the neoprene pad.
b. If the isolator is bolted to the structure, a neoprene mounting sleeve shall be installed under the bolt head between the steel washer and the base plate.
c. Mason Industries Type Mini Super W or approved equal.

E. Isolator Mount Type 2

1. Type 2 (Double Deflection Neoprene Mounts) shall be laterally stable, double deflecting, molded neoprene isolators. All metal surfaces shall be covered with neoprene. The top and bottom surfaces shall be ribbed and bolt holes shall be provided in the base. The mounts shall have a leveling bolts rigidly secured to the equipment.
2. The isolator shall be manufactured with bridge bearing quality neoprene and selected for a maximum durometer of 50 and designed for 15% strain. DDNM mounts shall be selected for a static deflection of 3/8 inch unless otherwise specified.
3. Mason Industries Type ND or approved equal.

F. Isolator Mount Type 3

1. Type 3 (Spring and Low Dynamic Stiffness Mounts) shall have a free-standing and laterally stable steel spring without any housing. Springs shall be designed so that the ratio of the horizontal to vertical spring constant is between one and two. The spring diameter shall be not less than 80% of the compressed height of the spring at rated load. Loaded springs shall have a minimum additional travel to solid equal to 50% of the specified static deflection.
2. Unless otherwise specified, the minimum static deflection of Type 3 isolators for equipment mounted on grade slabs shall be 1 inch and for the minimum static deflection for equipment mounted above grade level shall be 2 inches.

3. Two Type 3 isolation pads sandwiching a 16 gauge stainless or galvanized steel separator plate shall be bounded to the isolator baseplate.
4. Unless otherwise specified, isolators need not be bolted to the floor for indoor installations. If the base plates are bolted to the structure, a neoprene mounting sleeve shall be installed under the bolt head between the steel washer and the base plate.
5. Mason Industries Type SLF or approved equal.

G. Isolator Mount Type 4

1. Laterally stable, restrained spring type with housings and heavy top plates for supporting the equipment and resisting seismic and wind loading. Spring isolators shall be comprised of two interfacing but independent elements; a coil spring element and a seismically rated housing. Housings and springs shall be powder coated and hardware galvanized. The spring coil element shall be comprised of one or more coil assemblies having all of the characteristics of freestanding coil spring isolators.
2. The seismically rated housing shall be sized to meet or exceed the force requirements applicable to the project and have the capability of accepting coils of various sizes, capacities, and deflections as required to meet the desired isolation criteria. All spring forces will be contained within the coil/housing assembly and under no seismic load condition shall the restraint anchoring hardware be exposed to spring generated forces. Top plate and restraining bolts shall be out of contact with the housing during normal operation.
3. The restraint element shall incorporate a steel housing with elastomeric elements at all dynamic contact points. The restraint will allow a maximum of 1/4 in. (25 mm) motion in any direction from the neutral position. All elastomeric elements shall be replaceable.
4. The leveling nut or screw shall be accessible for adjustment with the use of a pneumatic or electric impact wrench. The spring element shall be replaceable without having to lift or otherwise remove the supported equipment.

H. Isolator Hanger Type 2

1. Type 2 (Double Deflection Low Dynamic Stiffness Hangers) shall consist of a molded low dynamic stiffness (LDS) isolating element in a steel hanger box. A LDS sleeve shall be provided where the lower hanger rod passes through the steel hanger box, such that the hanger rod cannot contact the steel hanger. The diameter of the clear hole in the hanger box shall be at least 3/4 inch larger than the diameter of the hanger rod and permit the hanger rod to swing through a 30° arc. When installed, the hanger box shall be allowed to rotate through a full 360° without encountering any obstructions.
2. The isolator shall be manufactured with quality LDS and selected for a maximum durometer of 50 and designed for 15% strain. Unless otherwise specified, the static deflection of Type 2 hangers shall be minimum of 0.3 inches.
3. Mason Industries Type HD or approved equal.

I. Isolator Hanger Type 3

1. Type 3 (Spring and Low Dynamic Stiffness Hangers) shall consist of a steel spring in a series with a low dynamic stiffness (LDS) isolating element. The spring shall have a minimum additional travel to solid equal to 50% of the specified deflection. The neoprene element shall have a static deflection of not less than 0.3 inches with a strain not exceeding 15%.
2. Unless otherwise specified, the static deflection of SPH hangers shall be 2 inches.
3. Spring diameter and hanger box hole size shall be large enough to permit the hanger rod to swing through a 30° arc. A neoprene sleeve shall be provided where the lower hanger rod passes through the steel hanger box, such that the hanger rod cannot contact the steel hanger. The diameter of the clear hole in the hanger box shall be at least 3/4 inch larger than the diameter of the hanger rod. When installed the spring element shall not be cocked and the hanger box shall be allowed to rotate through a full 360° arc without encountering any obstructions.
4. Mason Industries Type 30N or approved equal.

PART 3 - EXECUTION

3.1 GENERAL

A. All equipment mounted on vibration isolators shall have a minimum operating clearance of 1 inch between the bottom of the equipment or inertia base (and height saving bracket) and the concrete housekeeping pad (or bolt heads) beneath the equipment.

B. Check the clearance to ensure that no scraps have been left to short circuit the vibration isolators.

C. Provide a minimum of 4 inches between isolated equipment and the walls, ceiling, floors, columns and any other equipment not installed on vibration isolators.

D. Piping, ductwork, conduit or mechanical equipment shall not be hung from or supported on other equipment, pipes, or ductwork installed on vibration isolators.

E. Equipment connected to water or other fluid piping shall be erected on isolators or isolated foundations at correct operating heights prior to connection of piping. Equipment should be blocked-up with temporary shims to final operating height. When the system is assembled and fluid is added, the isolators shall be adjusted to allow removal of the shims.

F. All mechanical equipment not specifically identified in this specification that contains rotating or vibrating elements shall be installed on Mount Type 2 neoprene isolators as appropriate. Provide supporting steel structure between isolators and equipment if isolator does not readily connect to equipment.

G. All equipment and their respective isolators shall be directly mounted on primary steel. Units and isolators shall not be mounted on resiliently supported steel cabinets or plenum floors or other flexible construction.

H. Roof mounted fans or roof top units shall be installed on a curb mounted base.

I. All wiring connections to mechanical equipment on vibration isolators (either spring or neoprene type) shall be made with a minimum 36 inch long flexible conduit. Coordinate wiring connections with the Electrical Installer.

3.2 APPLICATION TABLES

A. **Floor Mounted Equipment**

Equipment Type	**Slab on Grade**		**Floor Span - Up to 30 Ft**		**Floor Span - 30 to 40 Ft**	
	Base Type	Isolator Type	Base Type	Isolator Type	Base Type	Isolator Type
Chillers:						
Water Cooled Reciprocating	A	Mount 1	A	Mount 1	A	Mount 1
Water Cooled Centrifugal	A	Mount 1	A	Mount 4	A	Mount 4
Absorption	A	Mount 1	A	Mount 1	A	Mount 1
Cooling Towers:						
All	A	Mount 1	A	Mount 4	A	Mount 4
Air Compressors:						
Tank Mounted - Horz < 20 HP	A	Mount 3	A	Mount 3	A	Mount 3
All Others	C	Mount 3	C	Mount 3	C	Mount 3
Pumps:						
Base mounted < 7.5 HP	A	Mount 3	C	Mount 3	C	Mount 3
All Others	A	Mount 3	C	Mount 3	C	Mount 3
Fans:						
< 22" dia	A	Mount 2	A	Mount 3	C	Mount 3
> 22" dia & < 2" SP	B	Mount 3	C	Mount 3	C	Mount 3
> 22" dia & > 2" SP	C	Mount 2	C	Mount 3	C	Mount 3
Roof Top Unit						
All	Curb	Mount 1	Curb	Mount 1	Curb	Mount 1
Computer Room Units:						
All	A	Mount 3	A	Mount 3	A	Mount 3

Generators:						
All	A	Mount 3	C	Mount 3	C	Mount 3

B. **Suspended Equipment**

Equipment Type	**Isolator Type**
Pumps:	
In Line Pumps < 5 HP	Hanger 3
Fans: (Including Fan Coil Unit and Heat Pumps)	
< 22" Dia	Hanger 2
> 22" Dia & < 2" SP	Hanger 3
> 22" Dia & > 2" SP	Hanger 3

"Floor Span": Defined as the distance between centers of floor joists

3.3 BASE MOUNTED PUMPS

A. Any rigid pipe elbows at the pump suction and discharge connections shall be supported from the inertia base. All pipe connections shall be with a flexible pipe connector.

3.4 FAN ISOLATION - GENERAL

A. All fan bases and isolators shall be sized so that thrust restraints (which would act against turning moment caused by static pressure) are not required.

3.5 PIPES WITH MULTIPLE CONNECTIONS

A. Where a pipe run connects multiple items of equipment in the Mechanical Room the pipe hanger isolators for the entire run shall be chosen to suit the connected equipment of greatest static deflection.

SPEC EDITOR NOTE: INCLUDE SUBSECTOIN 3.8 FOR VIBRATION SENSITIVE BUILDINGS.

3.6 INSPECTION

A. Isolator manufacturer service representative shall inspect and approve the installation of the vibration isolators and shall submit a report to the Owner which verifies that all of the isolation equipment has been properly installed and that the installation is in full conformance with the specification. The report shall record the vibration isolator identification and model or type.

B. For isolators containing steel springs the report shall also record the size and uncompressed height, design static deflection and measured static deflection of the isolators provided.

END OF SECTION 220548

UNIVERSITY OF MICHIGAN
ARCHITECTURE, ENGINEERING AND CONSTRUCTION

ARCHITECTURE & ENGINEERING
326 East Hoover, Mail Stop B
Ann Arbor, MI 48109-1002
Phone: 734-764-3414
Fax: 734-936-3334

BuildingName
The Description of the Project
P00000000 0000

SPECIFICATION DIVISION 22

NUMBER SECTION DESCRIPTION

DIVISION 22 PLUMBING
SECTION 220553 - MECHANICAL IDENTIFICATION

END OF CONTENTS TABLE

DIVISION 22 PLUMBING
SECTION 220553 - MECHANICAL IDENTIFICATION

REVISIONS:
10-12-00: SUBSTANTIALLY REVISED, APPROVED AS NEW MASTER
UPDATED BY PLMG/FP MTT October 2017

PART 1 - GENERAL

1.1 RELATED DOCUMENTS

INCLUDE PARAGRAPH 1.1.A - IN EVERY SPECIFICATION SECTION.

A. Drawings and general provisions of the Contract, Standard General and Supplementary General Conditions, Division 1 Specification Sections, and other applicable Specification Sections including the Related Sections listed below, apply to this Section.

1.2 SCOPE OF WORK:

A. Mechanical identification on piping, ductwork and equipment, identification of underground pipe, valve tags, and architectural access panels.

1.3 QUALITY ASSURANCE

A. Comply with ANSI A13.1 for lettering, size, colors, and viewing angles of mechanical identification.

1.4 ACCEPTABLE MANUFACTURERS:

A. Provide mechanical identification materials from one of the following:

1. Brady Co.
2. Brimer
3. Craftmark
4. Seton
5. Marking Services Incorporated

PART 2 - PRODUCTS

2.1 PIPE MARKERS:

A. Manufacturer's standard, pre-printed, color-coded, plastic pipe markers, complying with ANSI A13.1, and requirements below. Self-adhesive markers are not acceptable.

B. For pipe diameter (with insulation) less than 6": full-band, semi-rigid, snap-on pipe markers, extending 360 degrees around pipe.

C. For pipe diameter (with insulation) of 6" and larger: full-band or strip-type pipe markers, but not narrower than 3 times letter height. Fasten with nylon or stainless steel bands for pipe 6" through 12". Fastened with stainless steel bands for piping over 12".

D. Lettering: Standard nomenclature which best describes piping system, as selected by Engineer (in cases of variance from table below).

E. Arrows: Pipe marker arrows indicating direction of flow, either integrally with piping system lettering, or as a separate marker.

F. Identify contents of piping by both fluid contained and unique temperature and /or pressure (if necessary to distinguish between other systems with same fluid at different conditions); e.g. Potable Hot Water - 110F vs Potable Hot Water - 140F.

G. Use the following color coding and nomenclature for pipe markers:

SPEC EDITOR: EDIT THIS LIST TO ADD ANY SPECIFIED SYSTEMS, NOT INCLUDED IN THIS LIST. COORDINATE NOMENCLATUE WITH SYMBOLS SHEET AND PLANS.

Plumbing and Waste Pipe System Labels	Drawing I.D. (For Reference Only)	Letter and Label Color
Acid Vent	AV	Black on Orange
Acid Waste	AW	Black on Orange
Brine	BR	Black on Orange
Cold Water, Potable	CW	White on Green
Compressed Air	A	White on Blue
Deionized Water	DI	White on Green
Deionized Water Return	DIR	White on Green
Fire Protection	FP	White on Red
Hazardous Waste	HAZ	Black on Yellow
Hot Water Supply, Potable	HW	Black on Yellow
Hot Water Return, Potable	HWR	Black on Yellow
Instrument Air	IA	White on Blue
Natural Gas	G	Black on Yellow
Non-Potable Water	NPW	Black on Yellow
Radiation Waste	RAD	Black on Yellow
Rainwater Conductor	RC	White on Green
Reverse Osmosis Water	RO	White on Green
Rev. Osmosis Return	ROR	White on Green
Sanitary Vent	V	White on Green
Sanitary Waste	SAN	White on Green
Silver Recovery	AG	Black on Yellow
Soft Cold Water	SCW	White on Green
Storm Sewer Water	ST	White on Green
Vacuum	VAC	White on Blue

Heating and Cooling Pipe System Labels	Drawing I.D. (For Reference Only)	Letter and Label Color
Chilled Beam Return	CBR	White on Green
Chilled Beam Supply	CBS	White on Green

Chilled Water Return	CHWR	White on Green
Chilled Water Supply	CHWS	White on Green
Condensate Vent	SCV	Black on Yellow
Condenser Water Return	CWR	White on Green
Condenser Water Supply	CWS	White on Green
Energy Recovery Wat. Ret.	ERWR	White on Green
Energy Recovery Wat. Supp.	ERWS	White on Green
Fuel Oil Return	FOR	Black on Yellow
Fuel Oil Supply	FOS	Black on Yellow
High Pressure Condensate	HPC	Black on Yellow
High Pressure Steam	HPS	Black on Yellow
Hot Water Heating Return	HWHR	Black on Yellow
Hot Water Heating Supply	HWHS	Black on Yellow
Low Pressure Condensate	LPC	Black on Yellow
Low Pressure Steam (15#)	LPS	Black on Yellow
Medium Pressure Condensate	MPC	Black on Yellow
Medium Pressure Steam (60#)	MPS	Black on Yellow
Process Water Return	PWR	White on Green
Process Chilled Water Supply	PCHWS	White on Green
Process Chilled Water Return	PCHWR	White on Green
Process Water Supply	PWS	White on Green
Pumped Steam Condensate	PC	Black on Yellow
|		

Lab / Medical Gas Pipe System Labels	Drawing I.D. (For Reference Only)	Letter and Label Color
Carbon Dioxide	CO2	White/Black on Gray
Helium	HE	White on Brown
Dental Air	DA	Black on Yellow
Dental Vacuum	DVAC	Silver on Yellow
Laboratory Compressed Air	LCA	Black on Yellow & White Checkerboard
Laboratory Vacuum	Lab Vac	Black boxed on white and black checkerboard
Medical Air	Med Air	Black on Yellow Block boxed on white and black checkerboard
Medical Vacuum	Med Vac	Black on White
Nitrous Oxide	N2O	White on Blue
Nitrogen	N2	White on Black
Oxygen	O2	White on Green
Waste Anesthetic Gas Disposal	WAGD	White on Violet

ALL labeling shall conform to NFPA 99.

2.2 DUCT MARKERS:

A. Plastic, adhesive type color-coded duct markers, with arrow indicating direction of flow, and with fan system identified. Conform to the following color code and nomenclature:

Service/ Duct Label	Drawing I.D. (For Reference Only)	Letter and Label Color
Exhaust Air (Equip.#)	EA (Eq.#)	Black on Yellow
Fume Hood Exhaust (Equip.#)	FHEA (Eq.#)	Black on Yellow
Hazardous Exhaust (Equip.#)	HAZ EX (Eq.#)	Black on Yellow
Lab General Exhaust (Equip.#)	LGEX (Eq.#)	Black on Yellow
Outdoor Air (Equip.#)	OA (Eq.#)	White on Green
Return Air (Equip.#)	RA (Eq.#)	White on Green
Smoke Evac Exhaust (Equip.#)	SMOKE EX (Eq.#)	Black on Yellow
Smoke Evac Supply (Equip.#)	SMOKE SUP (Eq.#)	White on Green
Supply Air (Equip.#)	SA (Eq.#)	White on Green

B. Provide plastic adhesive duct access door markers indicating item and associated equipment accessed, and appropriate safety and procedural information. (eg. Fire Damper AHU-1)

2.3 EQUIPMENT MARKERS:

A. Engraved plastic equipment markers for all scheduled equipment, (eg., chillers, pumps, air handling units, heat exchangers, and fans). Indicate drawing I.D., and service, (eg., EF-1 serving FH No.3 in Rm. 2035, or P-7 Primary Chilled Water), nominal capacity (tons, cfm or gpm). Scale marker and lettering to equipment labeled. Typical nomenclature:

Drawing I.D. & Equip. Label	Equipment
ACC	Air Cooled Condenser
AHU	Air Handling Unit
CH	Chiller
CHWP	Chilled Water Pump
CP	Condensate Pump
CT	Cooling Tower
CUH	Cabinet Unit Heater
CWP	Condenser Water Pump
EWH	Electric Water Heater
FHEF	Fume Hood Exhaust Fan
FP	Fire Pump
GEF	General Exhaust Fan
GWH	Gas-fired Water Heater

HTX	Heat Exchanger
HWB	Hot Water Boiler
HWHP	Hot Water Heating Pump
LEF	Lab Exhaust Fan
P	Pump (other than those listed)
RF	Return Fan
SB	Steam Boiler
SF	Supply Fan
TEC	Terminal Equipment Controller
UH	Unit Heater
VAV	Variable Air Volume Box
VP	Vacuum Pump

2.4 IDENTIFICATION ACCESSORIES:

A. Underground Pipe Markers: Manufacturer's standard, permanent, bright-colored plastic tape, intended for direct-burial service, 6" wide x 4 mils thick, continuously printed to indicate service of buried pipe. For plastic pipe, provide label with detectable nonferrous locator.

SPEC EDITOR: VALVE TAGS ARE TYPICALLY NOT REQUIRED FOR RENOVATION PROJECTS. CONSIDER VALVE TAGS ONLY FOR NEW BUILDINGS, AND GUT RENOVATION PROJECTS.

B. Valve Tags: 1-1/2" diameter brass valve tags with 1/4" stamp-engraved designations with piping system abbreviation and sequenced valve numbers. Provide solid brass chain, or solid brass S-hooks of the size and type required for proper attachment of tags to valves.

SPEC EDITOR: COORDINATE ARCHITECTURAL ACCESS PANEL LABELING WITH ARCHITECT, ESPECIALLY IN AESTHETICALLY SENSITIVE AREAS..

C. Architectural Access Panel Markers: 1/16" thick engraved plastic laminate, with nomenclature corresponding to items for which access door was installed (eg. VAV-7, TEC-7 and HWH control valve V-23).

PART 3 - EXECUTION

3.1 GENERAL INSTALLATION REQUIREMENTS:

A. Coordination: Install identification after insulation is applied. Protect identification from paint, or apply after painting is complete. Install above ceiling identification prior to acoustical ceilings.

B. Attachment: Securely attach all mechanical identification to associated pipe, duct, panels and equipment. Locate identification to be readily visible.

3.2 PIPING SYSTEM IDENTIFICATION:

A. Install pipe markers on all piping systems in all locations where piping, whether concealed or non-concealed, and where accessible at manholes and access panels. Installed at all access panels or doors, adjacent to valves and branch connections, both sides of floors, ceilings and walls, and all major changes in direction,

B. Locate pipe markers near points where piping continues into shafts, underground, floor or wall; at 25' spacing along exposed runs (15' in congested areas), at valves, equipment and control devices, and where there could be question of flow pattern.

C. Install marker over pipe insulation segment on hot non-insulated pipes.

3.3 DUCTWORK IDENTIFICATION:

A. Install duct markers on all supply, return, exhaust, intake and relief ductwork, whether concealed or non-concealed, , and where accessible at access panels. Install at all access panels or doors, both sides of floors, ceilings and walls, and all major changes in direction.

B. Locate duct markers near points where ductwork originates or continues into shafts, floor or wall, and at 25' spacing along exposed runs (15' in congested areas), equipment and control devises, and where there could be a question of flow pattern.

C. Install duct access door markers on all access doors.

3.4 EQUIPMENT IDENTIFICATION:

A. Provide equipment markers on scheduled equipment.

3.5 UNDERGROUND PIPING IDENTIFICATION:

A. During back-filling, install continuous underground pipe markers over all buried piping, 6" to 8" below finished grade, at 24" intervals across the field. Where multiple pipes are in a trench up to 16" wide, install single line marker. For tile fields and similar installations, mark only edge pipe lines of field.

3.6 VALVE IDENTIFICATION:

A. Install valve tags on all new valves and regulators for the following piping systems, except for valves within factory-fabricated equipment, at plumbing fixture faucets, hose bibs, and valves located directly at the equipment served. Number valves in a logical sequence relative to location installed.

SPEC EDITOR: SPECIFY SYSTEMS TO RECEIVE VALVE TAGS

B. List each tagged valve in valve schedule for each piping system. Include a copy of the valve tag schedule in the Operation and Maintenance manuals, and mount a laminated copy on a wall as directed by the University.

C. Where building has previously tagged valves, coordinate numbering with old schedule, and note changes made to previously tagged valves on new schedule.

3.7 ARCHITECTURAL ACCESS PANEL IDENTIFICATION:

A. Install access panel markers on inside and/or outside of access doors, as directed by the University.

END OF SECTION 220553

UNIVERSITY OF MICHIGAN
ARCHITECTURE, ENGINEERING AND CONSTRUCTION

ARCHITECTURE & ENGINEERING
326 East Hoover, Mail Stop B
Ann Arbor, MI 48109-1002
Phone: 734-764-3414
Fax: 734-936-3334

BuildingName
The Description of the Project
P00000000 0000

SPECIFICATION DIVISION 22

NUMBER SECTION DESCRIPTION

DIVISION 22 PLUMBING
SECTION 220719 - MECHANICAL SYSTEMS INSULATION

END OF CONTENTS TABLE

DIVISION 22 PLUMBING
SECTION 220719 - MECHANICAL SYSTEMS INSULATION

REVISIONS:
8-1-99: CONTENT APPROVED AS NEW MASTER
8-11-99: REVISED TO VBS.DOT TEMPLATE

1-7-2011: REVISED TO COMPLY WITH ASHRAE 90.1-2007.

SPEC EDITOR: MANUFACTURERS WERE UPDATED 6/97 W/ ASSSISTANCE FROM ARMSTRONG. HOWEVER, MODEL NUMBERS SEEM TO CHANGE FREQUENTLY IN THE INSULATION INDUSTRY, REVIEW CAREFULLY AGAINST CURRENT CATALOG AND NOTIFY THE SPEC TEAM OF DISCREPANCIES.

PART 1 - GENERAL

1.1 RELATED DOCUMENTS

INCLUDE PARAGRAPH 1.1.A AND B IN EVERY SPECIFICATION SECTION. EDIT RELATED SECTIONS 1.1.B TO MAKE IT PROJECT SPECIFIC.

A. Drawings and general provisions of the Contract, Standard General and Supplementary General Conditions, Division 1 Specification Sections, and other applicable Specification Sections including the Related Sections listed below, apply to this Section.

SPEC EDITOR: EDIT THE FOLLOWING AS REQUIRED

1.2 SCOPE OF WORK:

A. Insulate piping, ductwork and equipment unless indicated as not to be insulated in paragraph 1.2.

B. Reinsulate items from which asbestos insulation was removed.

C. Insulate connection points between new and existing items.

D. Repair or replace insulation damaged during construction.

1.3 ITEMS NOT TO BE INSULATED:

SPEC EDITOR: EDIT LIST BELOW TO SUIT PROJECT

A. Equipment: hot water pumps, steam condensate pumps, feed water pump, water softener shell, vacuum pumps, hot water shot feeders, hot water expansion tanks, factory insulated equipment.

B. In hot piping: Unions, flexible connectors, control valves 2" and smaller, safety valves, discharge vent piping, vacuum breakers, thermostatic vent valves, and steam traps 3/4 inch and smaller.

C. Other piping: waste and vent, compressed air, natural gas, lab vacuum, refrigerant liquid lines, vertical portion of rain water conductors.

D. Ductwork: indoor return air ductwork in conditioned areas, exhaust air ductwork.

SPEC EDITOR: REVISE 1.3 AS REQUIRED; INCLUDE ITEMS CONTAINING ASBESTOS IN DIVISION 02 OR ON PLANS.

1.4 ASBESTOS ABATEMENT:

A. All asbestos within the contract bounds shall be removed per the requirements described in Division 02. Refer to drawings for items containing asbestos insulation. Reinsulate all piping, ductwork and equipment to remain from which asbestos has been removed.

PART 2 - PRODUCTS

2.1 GENERAL INSULATION DEFINITIONS:

A. Insulation thermal conductivity: No greater than value listed, in Btu-inch/hour-square foot-degrees F at 75 degrees F mean temperature.

B. Water Vapor Permeance (ASTM E97 or E96, Procedure A): No more than value listed, in perms. Water vapor permeability (ASTM C355): No greater than value listed, in perm-inch.

C. Puncture resistance (ASTM D781): No less than value listed.

D. Flame spread classification (ASTM E84, NFPA 255): No greater than value listed. Smoke density classification (ASTM E84, NFPA 255): No greater than value listed. Composite listing includes insulation, jacket, and adhesive.

E. Density no less than value listed, in pounds per cubic foot.

2.2 PIPING INSULATION THICKNESS TABLE:

A. Minimum insulation thickness in inches, shall comply with the table below for the associated piping system and pipe sizes. Values are based on an R value of 4 per inch thickness. Overall conductance shall comply with ASHRAE 90.

SPEC EDITOR: INSULATION THICKNESSES GENERALLY CORRESPONDS TO ASHRAE TABLE.

Piping System Fluid	Temp. Range Deg. F	Thickness in Inches For Pipe Sizes Through Size Listed 1"	2"	4"	6"	8"	10" & above
MPS (60#) (above to include MPS condensate)	251-305	2.0	3.0	3.0	3.0	3.0	3.0
LPS (15#) (above to include LPS condensate)	201-250	1.5	2.0	2.0	2.0	2.0	2.0
Hot Water (above includes domestic and heating)	110-200	1.0	1.0	1.5	1.5	1.5	1.5
Cold Water	Any	0.5	0.5	0.5	0.5	0.5	0.5
Storm	Any	0.5	0.5	0.5	0.5	0.5	0.5
Chilled W.	Any	0.5	1.0	1.0	1.0	1.0	1.5
Ref. Suct.	Any	1.0	1.5	1.5	N/A	N/A	N/A
Energy Recovery	Any	1.0	1.0	1.0	1.0	1.0	1.0

Free Cooling Cond. Water	Any	1.0	1.0	1.0	1.0	1.0	1.0	

B. For heat traced piping use insulation ¼" diameter larger to allow room for installation of cable.

2.3 PIPING INSULATION - INDOOR (FIBERGLASS):

A. Insulate with fiberglass insulation with factory-applied vapor barrier jacket with self-sealing laps. ASTM C547 Class 1 insulation, conductivity of 0.26. Vapor barrier jacket: laminated white kraft paper, aluminum foil, glass fiber reinforcement, permeance of 0.2 perms, and puncture resistance of 50 units. Composite flame spread/ smoke density of 25/50. Apply insulation in thickness listed in Insulation Thickness Table listed in paragraph 2.2.

Manufacturers: Johns-Manville (Micro-Lok 650 AP-T), Knauf (ASJ-SS1 Pipe Insulation), Owens/Corning (Fiberglass ASJ/SSL-II)

B. At fittings and flanges, insulate with wrapped fiberglass insulation of same thickness as adjacent pipe, and cover with pre-molded PVC jackets. Seal edge of jacket with self-sealing vapor barrier tape.

Jacket Manufacturer: Zeston, Ceeco, Proto

C. For valves, strainers, suction diffusers and other accessories that require maintenance: In hot piping, insulate similar to fittings and flanges. In cold piping, insulate with closed cell elastomeric insulation, installed to be removable for maintenance access.

D. Wherever necessary to seal insulation and provide a complete and continuous vapor barrier, apply two coats of insulating mastic Manufacturers: Celotex - MW-1 Insulating and Finishing Cement; Pabco - Pabcote One Coat Insulating Cement.

2.4 PIPING INSULATION - OUTDOOR (FIBERGLASS):

SPEC EDITOR: THIS SECTION SHOULD BE USED FOR VERY HOT PIPING ONLY (SURFACE TEMPERATURE ABOVE 200F)

A. Insulate steam and condensate piping systems outside buildings with the materials and methods listed for "Piping Insulation - Indoor (Fiberglass)." Apply insulation 1/2" thicker than listed in table, and weatherproof the insulation with PVC insulation jacketing: Manufacturers: Zeston, Ceeco, Proto

2.5 PIPING INSULATION (CLOSED CELL ELASTOMERIC):

SPEC EDITOR: INDOOR PIPE INSULATION MAY BE SPECIFIED IN ONE OF THE FOLLOWING WAYS:
A. FIBERGLASS ONLY (USE PARAGRAPH 2.3)
B. FIBERGLASS OR ELASTOMERIC (USE PARAGRAPH 2.3 AND 2.5, WITH CONTRACTOR'S OPTION PARAGRAPH)
C. ELASTOMERIC ONLY (USE 2.5 WITHOUT CONTRACTOR OPTION)

THESE PRODUCTS ARE SUITABLE FOR TEMPERATURES OF APPROXIMATELY 0 TO 180F.

SPEC EDITOR: CHOOSE ONE OF THE FOLLOWING "A." PARAGRAPHS:

A. As a Contractor's Option to paragraph 2.3, insulate hot water, cold water, chilled water, refrigerant, piping systems with flexible closed cell elastomeric or Polyolefin pipe insulation, ASTM C534, conductivity of 0.30, water vapor permeability of 0.20. In thickness 1" and less, composite flame spread/ smoke density of 25/50.. Manufacturers: Armstrong - AP Armaflex; Rubatex - R-180-FS, IMCOA.

B. Insulate hot water, cold water, chilled water, and refrigerant piping systems with flexible closed cell elastomeric or Polyolefin pipe insulation, ASTM C534, conductivity of 0.30, water vapor permeability of 0.20. In thickness 1" and less, composite flame spread/ smoke density of 25/50. Manufacturers: Armstrong - AP Armaflex; Rubatex - R-180-FS, IMCOA.

1. Apply insulation in thickness listed in table in paragraph 2.2. Seal all butt joints and seams by joining cut edges with adhesive as supplied by the insulation manufacturer.
2. For exterior piping, coat insulation with glass mesh and two finish coats compatible with insulation. Manufacturer: Armstrong WB.

2.6 PIPING INSULATION SPECIALTIES:

SPEC EDITOR: ALUMINUM JACKETS ARE NOT GENERALLY RECOMMENDED, BECAUSE OF DAMAGE AND FAILURES WE'VE EXPERIENCED LATELY.

A. Expansion Joints Insulation: Expansion joints shall be insulated with prefabricated insulation blankets, installed in a manner to allow for the repacking of the joints without removing blanket. Hold blankets in place with permanently attached Velcro fasteners.

B. Aluminum Jackets: Where indicated on drawings, provide 0.016” thick alloy 3003 aluminum jacketing with longitudinal lock seam and butt strap circumferential joints. Manufacturers: Childers-Lock-on and Pabco-Surfeit.

C. Removable Insulation Jackets: Where indicated on drawings, provide removable insulation jackets with fiberglass insulation, flexible fabric jacket and velcro fasteners. Manufacturer: ESI - Q Master; Insulation Technologies Inc.

2.7 DUCTWORK INSULATION - INDOOR, EXPOSED:

SPEC EDITOR: RIGID INSULATION IS AVAILABLE IN DENSITIES OF 1.6, 2.25, 3.0, 4.25 AND 6.0. R VALUE AND COST INCREASE WITH DENSITY. INSULATION THICKNESS WAS INCREASED TO IMPROVE FIT OVER FLANGED CONNECTIONS, MAY BE REDUCED TO 1" FOR SLIP AND DRIVE DUCT.

A. In mechanical equipment rooms and all other areas where visible without removing ceilings or opening access panels, insulate ductwork with 1-1/2" thick rigid, fiberglass insulation board with factory-applied vapor barrier. Insulation: ASTM C612 Class 2, conductivity of 0.26, density of 3.0. Vapor barrier: laminated white kraft paper, aluminum foil, glass fiber reinforcement, permeance of 0.02, and puncture resistance of 50 units. Composite flame spread/ smoke density of 25/50.

B. Manufacturers: CertainTeed - IB600 ASJ Industrial Insulation Board; Schuller - Type 817 Ap Spin-Glas; Knauf - PCF-ASJ Insulation Board; Owens/Corning - Type 705 ASJ-25 Fiberglas Insulation

2.8 DUCTWORK INSULATION - INDOOR, CONCEALED:

SPEC EDITOR: BLANKET INSULATION IS AVAILABLE IN DENSITIES 0.75, 1.0 AND 1.5. R VALUE AND COST INCREASE WITH DENSITY.

A. In ceiling spaces, building shafts, and other locations where not visible, insulate ductwork with 1-1/2" thick, blanket-type, fiberglass insulation with factory-applied vapor barrier, and 2" stapling and taping flange along one edge. Insulation: ASTM C553, density of 0.75, conductivity of 0.32. Vapor barrier: laminated white kraft paper, aluminum foil, glass fiber reinforcement, permeance of 0.02, and puncture resistance of 50 units. Composite flame spread/ smoke density of 25/50.

B. Manufacturers: CertainTeed - Type 75 FSK Standard Duct Wrap; Schuller - R Series Microlite with FSKL; Knauf - Duct Wrap with Multi-Purpose FSK; Owens/Corning - All Service Faced Duct Wrap

SPEC EDITOR: SCHULLER IS IN QUESTION AS A MANUAFCTURER, AS IS JOHNS MANVILLE

2.9 DUCTWORK INSULATION - OUTDOOR:

SPEC EDITOR: PLANT HAS BEEN EXPERIMENTING WITH USING EPDM ROOFING AS A WRAPPING MATERIAL FOR EXTERIOR DUCTWORK. PRELIMINARY RESULTS LOOK PROMISING. CONSIDER ADDING PLANT WORK ORDER TO BUDGET TO COVER THIS.

A. Insulate exterior ductwork with 2.0" thick flexible closed cell elastomeric insulation, ASTM C534, conductivity of 0.30, water vapor permeability of 0.20. Composite flame spread/ smoke density of 25/50..

1. Seal all butt joints and seams by joining cut edges with adhesive as supplied by the insulation manufacturer.
2. Wrap insulation with glass mesh and coat with two finish coats. Manufacturer: Armstrong WB.
3. Taper insulation to prevent ponding.
4. Manufacturers: Armstrong - AP Armaflex; Rubatex - R-180-FS.

2.10 HOT EQUIPMENT INSULATION:

A. Insulate all equipment with surface temperature over 100F, using rigid fiberglass insulation board. Insulation: ASTM C612 Class 2, conductivity of 0.26, density of 6.0. Vapor barrier: laminated white kraft paper, aluminum foil, glass fiber reinforcement, permeance of 0.2, and puncture resistance of 50 units. Composite flame spread/ smoke density of 25/50.

B. Manufacturers: CertainTeed - IB600 ASJ Industrial Insulation Board; Schuller - Type 817 Ap Spin-Glas; Knauf - 6PCF-ASJ Insulation Board; Owens/Corning - Type 705 ASJ-25 Fiberglas Insulation

C. Apply insulation in thickness as follows: 1-1/2" for operating temperature up to 150F, 2" for operating temperature of 150F to 200F, 3" for operating temperature over 200F.

D. Cut, score, or miter insulation to fit contour of equipment and secure with galvanized steel bands or wire, or weld pins. Stagger joints where possible and fill voids with insulating cement. Apply 1" galvanized wire mesh over entire exterior surface and finish with two coats of insulating cement toweled to a hard finish.

2.11 COLD EQUIPMENT INSULATION:

A. Insulate all equipment with surface temperature below 60F with 1" thick, flexible, closed cell, elastomeric foam insulation sheet. Manufacturers: Armstrong - AP Armaflex Sheet Insulation; Rubatex - R-1800-FS Insul-Sheet.

B. Insulation: ASTM C534, conductivity of 0.30, permeance of 0.20, composite flame spread/ smoke density of 25/50..

C. Apply elastomeric foam insulation sheet with contact adhesive. Manufacturers: Armstrong - 520 Adhesive; Rubatex - 373 Adhesive. Seal all butt joints with adhesive.

PART 3 - EXECUTION

3.1 INSULATION INSTALLATION

A. All systems shall be tested and approved before being insulated.

B. The insulation shall be applied over clean, dry surface.

C. Insulate all valves, flanges, couplings and fittings. Valve and flange insulation shall be removable and reinstallable.

D. Full lengths of insulation shall be used except at end of straight sections and as required to accommodate fittings. Insulation shall be applied with the joints tightly fitted together. Cracks or voids shall be filled with insulation. Manufacturer's recommended installation procedures shall be strictly adhered to.

E. The edges and seams at all visible locations shall be finished in a neat and workmanlike manner.

F. All exposed ductwork insulation shall be applied with edges butted. Insulation shall be impaled over stick clips or pins welded to the duct, and secured with speed clips. Spacing of pins shall be as required to hold insulation firmly in place but not less than one pin per square foot. All joints and penetrations of the vapor barrier shall be sealed with a 3" wide strip of the same material, supplied with vapor barrier adhesive to both surfaces as recommended by adhesive manufacturers.

G. Blanket insulation shall be tightly sealed at all joints and seams. Insulation shall be cut longer than ductwork perimeter to allow maximum thickness on all areas and avoid excessive compression. All joints shall be over lapped at least 2" and stapled in place. The stapled seams shall be sealed with a minimum 3" wide pressure sensitive tape designed for use with the duct insulation. All breaks in the vapor barrier facing shall also be sealed with the tape. The underside of ductwork 18" or greater in width, and vertical surfaces 48" or greater shall have the insulation additionally secured with mechanical fasteners and speed clips spaced approximately 12" on center. The protruding ends of the fasteners shall be cut off flush after the speed clips are installed, and then sealed with the same tape as specified above.

H. Finished installation shall provide a continuous and effective vapor barrier.

I. Refer to details on drawings.

SPEC EDITOR: INSULATION SHIELDS AND INSULATION INSERTS (PIPE SHIELDS INC. ETC.) ARE COVERED BY UM STANDARD DETAIL.

END OF SECTION 220719

UNIVERSITY OF MICHIGAN
ARCHITECTURE, ENGINEERING AND CONSTRUCTION

ARCHITECTURE & ENGINEERING
326 East Hoover, Mail Stop B
Ann Arbor, MI 48109-1002
Phone: 734-764-3414
Fax: 734-936-3334

BuildingName
The Description of the Project
P00000000 0000

SPECIFICATION DIVISION 22

NUMBER SECTION DESCRIPTION

DIVISION 22
SECTION 221113 - PIPING MATERIALS AND METHODS

END OF CONTENTS TABLE

DIVISION 22
SECTION 221113 - PIPING MATERIALS AND METHODS

REVISIONS:
7-19-12: ADDED THAT SEALS ARE TO BE IMMUNE FROM CHLORAMINES AND THAT PRESS JOINT SEALS ARE TO BE PEROXIDE CURED. D. KARLE FOR PLMG MTT.

7-26-12: MOVED GYLCOL HANDLING FROM 220500 TO THIS SECTION. B. BEGG FOR PLMG MTT.

2014-01-06: IMPROVED LEAD FREE REQUIREMENTS TO REFLECT U.S SAFE DRINKING WATER ACT REQUIREMENTS THAT WENT INTO EFFECT JAN. 4, 2014. D.KARLE FOR MTT.

2014-JULY: GENERAL UPDATE OF ENTIRE SPECIFICATION PER PLMG. AND HYDRONICS MTT. D. KARLE

2014-DECEMBER: ADD GEORGE FISCHER AS APPROVED FOR PP PRESSURE PIPING, ADD MATERIAL REQUIREMENTS FOR STORM AND SANITARY PUMP DISCHARGE PIPING. ADD GENERAL REQUIREMENTS FOR PLASTIC PIPE HANGERS/SUPPORTS. D. KARLE FOR P & FP MTT.

2015-APRIL: REVISE STAINLESS PIPE DESCRIPTION TO ALLOW 316L ONLY FOR COLD DOMESTIC AND CONDENSER WATER DUE TO CONCERN WITH CHLORIDES IN CITY WATER CORRODING 304L. D. KARLE FOR P & FP MTT.

2015-AUGUST: REMOVED STANDARD DUTY NO-HUB COUPLING ASTM NUMBER C1277, ADDED SPEC FOR DIS-SIMILAR PIPE CONNECTION TO C.I. NO-HUB, IMPROVED BRACING AND HANGING REQUIREMENTS FOR NO-HUB AND STM/SAN. PIPING IN PART 3. D. KARLE FOR P & FP MTT.

2017-FEBRUARY: ADDED APOLLO XPRESS (PRESS TO CONNECT) FITTINGS, REVISED PRESS SPEC TO ALLOW FOR PRESS VALVES, STRAINERS, CHECK VALVES FROM ANY MFR APPROVED FOR THAT COMPONENT FOR PIPING 2" AND BELOW. ADDED IPEX ENFIELD PIPING TO DEIONIZED WATER - ABOVE GROUND, ADDED GEORG FISHER FUSEAL TO LAB WASTE & VENT PIPING - ABOVE/BELOW GROUND. DELETED FLEXIBLE CONNECTORS WHICH ARE COVERED IN 220548 VIBRATION CONTROL. CHANGED OSEH TO EHS. B. BEGG AND D. KARLE FOR P & FP MTT.

PART 1 - GENERAL

1.1 RELATED DOCUMENTS

INCLUDE PARAGRAPH 1.1.A AND B IN EVERY SPECIFICATION SECTION. EDIT RELATED SECTIONS 1.1.B TO MAKE IT PROJECT SPECIFIC.

A. Drawings and general provisions of the Contract, Standard General and Supplementary General Conditions, Division 1 Specification Sections, and other applicable Specification Sections, in particular the Related Sections listed below, apply to this Section.

B. Related Sections

1. Section 220500 - Common Work Results for Mechanical
2. Section 220548 - Vibration Control
3. Section 231123 - Facility Natural-Gas Piping
4. Section 232300 - Refrigerant Piping

1.2 SUMMARY

A. This Section specifies piping materials and installation methods for the piping systems listed in Part 2 and includes joining materials, piping specialties, and basic piping installation instructions.

1.3 SUBMITTALS

A. Product Data: Include manufacturer, catalog illustrations, model, rated capacities, performance, dimensions, component sizes, rough-in requirements, materials of construction, and operating and maintenance clearance requirements. Additionally include:

1. Provide a piping material schedule that indicates, by service, pipe material, pipe manufacturer, fitting type and manufacturer, joint type and manufacturer.
2. Solder and brazing material data sheets.
3. Grooved fittings, couplings, and accessories data sheets.
4. Data sheets for all products listed in this section including flanges, gaskets, unions, hangers, di-electric protection method, thermal hanger shield inserts, di-electric fittings, flexible metal hose, flexible connectors, and seal sleeve systems.
5. For underground pressurized and steam condensate piping systems, provide a simplified drawing of the piping system identifying pipe depth and slope, location and type of each joint and restraint, valve, and similar accessories, and dimensions of any expansion loops.

QUALITY ASSURANCE: CENTRAL POWER PLANT AND TUNNEL PROJECTS: REVIEW WITH U-M DESIGN MANAGER IF PIPE, FITTINGS AND FLANGES SHOULD BE CERTIFIED AS SOURCED FROM DOMESTIC SUPPLIERS, GERMANY, ITALY, FRANCE, OR GREAT BRITAIN.

1.4 QUALITY ASSURANCE:

A. Manufacturers and Products: The products and manufacturers specified in this Section establish the standard of quality for the Work. Subject to compliance with all requirements, provide specified products from the manufacturers named in Part 2.

B. Reference Standards: Products in this section shall be built, tested, and installed in compliance with the specified quality assurance standards; latest editions, unless noted otherwise.

1. All piping, (including vacuum piping), unless noted otherwise, shall comply with ANSI Standard B31.9 - Building Service Piping.
2. All steam piping above 15 psig, and all steam condensate piping shall comply with ANSI Standard B31.1 - Power Piping.
3. National Sanitation Foundation NSF/ANSI-61, including Annex G (listed as ≤ 0.25% weighted average lead content) (and/or NSF/ANSI-372) and Annex F. Applies to any item in contact with domestic (potable) water.

4. U.S Safe Drinking Water Act (any item in contact with domestic (potable) water)
5. NFPA 54 - National Fuel Gas Code
6. AWWA C600 Standard for Installation of Ductile-Iron Water Mains and their Appurtances
7. AWWA C606 Grooved and Shouldered Joints.
8. Mill certifications indicating country of origin and compliance to ASTM/ANSI/NSF and other required compliance standards verified by independent third party based in the United States, shall be promptly provided whenever requested.

1.5 DELIVERY, STORAGE, AND HANDLING

A. Store piping materials and accessories raised off the floor or ground on pallets and protected with coverings to prevent damage or contamination due to weather and construction activities. Provide temporary protective caps on pipe ends. Maintain caps installed at all times until just prior to assembly, and recap open pipe ends at the conclusion of each work day. Store in areas that prevent damage due to freezing and extreme temperatures or sunlight. Arrange coverings to provide air circulation to avoid damage from condensation or chemical build-up. Protect from damage, dirt and debris at all times.

1.6 WARRANTY

A. Provide a complete warranty for parts and labor for a minimum of one year from the date of Substantial Completion.

PART 2 - PRODUCTS

2.1 GENERAL PIPING REQUIREMENTS:

A. All piping materials shall be compatible for temperature, pressure and service.

B. All wetted seals shall be made from materials that are immune from chloramine degradation.

C. Provide long radius elbows and returns on welded steel pipe.

GROOVED JOINTS ARE ONLY PERMITTED IN ACCESSIBLE LOCATIONS. TYPICALLY, MECHANICAL ROOMS AND ABOVE LAY-IN ACOUSTIC CEILING ARE CONSIDERED ACCESSIBLE. SHAFTS AND AREAS ABOVE DRYWALL CEILINGS ARE EXAMPLES OF INACCESSIBLE LOCATIONS. REVISE THE PARAGRAPH BELOW TO INDICATE THE INACCESSIBLE LOCATIONS ON YOUR PROJECT.

D. Grooved Joints:

1. Where grooved joints are indicated as permitted, such joints are only permitted in accessible locations. The following locations are considered inaccessible: shafts, above dry wall ceilings.

2.2 PLUMBING PIPING SYSTEMS:

PROJECTS CONSIDERING THE USE GROOVED JOINTS OR COPPER PRESS FITTINGS (E.G. "PROPRESS") SHALL OBTAIN APPROVAL FIRST FROM THE U-M DESIGN MANAGER AND THE PLUMBING/FIRE PROTECTION MECH TECH TEAM. IF GROOVED JOINTS OR COPPER PRESS FITTINGS ARE NOT BEING USED, REMOVE ALL ASSOCIATED REFERENCES TO THESE ITEMS, BELOW. GROOVED AND PRESS JOINTS ARE PROHIBITED ON DOMESTIC HOT WATER/HOT WATER RETURN IN BUILDINGS (OK FOR TUNNELS) DUE TO U-M'S PAST EXPERIENCE WITH LEAKAGE PROBLEMS.

PVC PIPING MAY NOT BE USED IN RETURN PLENUMS OR SUPPLY DUCTS, OR IN BUILDING OVER 3 FLOORS HIGH.

A. Domestic Cold Water, Hot Water and Hot Water Return - Above Ground (including non-potable):

1. For piping through 6":
   a. Pipe: Type L Copper, hard drawn, ASTM B88
   b. Fittings: Wrought Copper, ANSI B16.22
   c. Joints: Soldered through 2"; Brazed for 2-1/2" through 6"

ONLY USE THE CONTRACTORS OPTIONS BELOW WITH APPROVAL. SEE ARTICLE 2.2 SPEC EDITORS NOTE, ABOVE.

Contractor Options:

   d. For piping 2-1/2" through 6", excluding inaccessible locations, Grooved Joints - for cold water may be used *(not allowed on hot or hot return)*.
   e. *For piping through 4", copper press to connect fittings for cold water may be used (not allowed on hot or hot return).*

U-M'S EXPERIENCE WITH GALVANIZED PIPE HAS NOT BEEN GOOD, THEREFORE COPPER OR STAINLESS STEEL IS PREFERRED AND SPECIFIED FOR 8"-12" PIPE. IF LARGER DIAMETER IS REQUIRED, DESIGNER MUST REVISE SPECIFICATION (BELOW, AND THE FITTINGS SECTION, MUCH FARTHER BELOWANOTHER ALTERNATIVE IS POLYPROPYLENE ("AQUATHERM").

2. For cold water piping 8" through 12":
   a. Pipe:
      1) Type L Copper, hard drawn, ASTM B88 or
      2) Sch. 10S Type 316L ASTM A312 seamless stainless steel.
   b. Fittings:
      1) For Copper Pipe: Wrought Copper, ANSI B16.22.
      2) For Stainless Steel Pipe:
         a) 316L ASTM A312 stainless steel.
         b) ASTM A403 Grade WP Class S or W, ANSI B16.9.
         c) Flanges: ASTM A182, weld neck, with ASTM A193/ASTM A194 bolts/nuts.
   c. Joints:
      1) Copper Pipe: Brazed. May be grooved where accessible, up to 8" maximum.
      2) Stainless Steel Pipe: Welded, or grooved where accessible. Weld per ASTM A312.
3. For tunnel applications:
   a. Piping: Type L copper, hard drawn, ASTM B88.
   b. Fittings: Wrought Copper, ANSI B16.22

c. Joints: Soldered through 2”; Brazed for 2-1/2” through 6”. Piping 2-1/2" through 6" may be grooved joints.

B. Domestic Cold Water - Under Ground (including non-potable):

1. For piping through 4”
Pipe: Type K Copper, hard drawn, ASTM B88
Fittings: Wrought Copper, ANSI B16.22
Joints: Brazed.

2. For piping 5” and larger:
Pipe: Ductile Iron, AWWA C115 or AWWA C151 with C104 cement mortar lining, polyethylene encased per ANSI/AWWA C105/A21.5.
Fittings: AWWA C110 or AWWA C153, 150 psi rating with C104 cement mortar lining.
Joints: AWWA C111 rubber gaskets.

SPEC EDITOR: INVESTIGATE SPECIFIC R.O. AND DEIONIZED WATER REQUIREMENTS WITH CLIENT AND EDIT THE BELOW TWO PARAGRAPHS ACCORDINGLY. CONFIRM NEED FOR HEAT FUSION JOINTS, AND SUITABILITY FOR SCREWED JOINTS. FOR D.I. WATER AT U-M, RESEARCH LABS NORMALLY SHOULD USE POLYPROPYLENE PIPE WITH FUSION JOINTS. ULTRA PURE SYSTEMS SUCH AS FOR SEMI-CONDUCTOR FABRICATION ARE TYPICALLY RECOMMENDED TO BE PVDF PIPE WITH FUSION JOINTS.

C. Reverse Osmosis Water - Above Ground:

1. Pipe: CPVC, Schedule 80, ASTM D2846
Fittings: ASTM D2846
Joints: Screwed or Solvent Welded

D. Deionized Water - Above Ground:

1. Pipe: Unpigmented polypropylene, Schedule 80, ASTM D4101, PP Resin.
Manufacturer: Georg Fischer PPro-Seal, IPEX Enfield, NIBCO, Orion.
Fittings: ASTM D4101
Joints: Heat Fusion Welded. “Riontite” mechanical Joints.

SPEC EDITOR NOTE: THE FOLLOWING PIPING CAN BE USED AS AN ALTERANTIVE TO THE POLYPROPYLENE PIPE. USE ONLY WHERE APPROVED BY U-M PROJECT MANAGER.

2. Alternate Pipe: Low extractable, polyvinyl chloride (PVC)compound, Type II pressure rating, Schedule 80, ASTM D1784.
Manufacturer: Spears LXT.
Fittings: Schedule 80, ASTM 2467
Joints: Specialty solvent cement, that meets or exceed the requirements of ASTM D2564 - Spears One-Step.

E. Lab Vacuum - Above Ground:

1. For piping through 4”:
Pipe: Type L Copper, hard drawn, ASTM B88
Fittings: Wrought Copper, ANSI B16.22
Joints: Soldered through 2”; Brazed for 2-1/2” through 4”

FOR COMPRESSED AIR PIPING ABOVE 6", PRESENT MATERIAL ALTERNATIVES TO THE U-M DESIGN MANAGER FOR APPROVAL.

F. Compressed Air - Above Ground:

1. For piping through 6”:
   Pipe: Type L Copper, hard drawn, ASTM B88
   Fittings: Wrought Copper, ANSI B16.22
   Joints: Soldered through 2”; Brazed for 2-1/2” through 6”

THE FOLLOWING IS AN ACCEPTABLE ALTERNATE SPECIFICATION FOR COMPRESSED AIR IN HIGH HAZARD AREAS, WHERE PIPING MAY BE SUBJECTED TO PHYSICAL ABUSE. IF USED, UNHIDE TEXT AND INDICATE THE SPECIFIC LOCATION WHERE STEEL PIPE MAY BE USED.

2. For piping through 2” in areas subjected to physical abuse:
   Pipe: Black Steel, Schedule 40, ASTM A 53, ERW or seamless, grade B
   Fittings: Cast Iron, 125 lb. ASTM A 126 or malleable iron 150 lb. ASTM A 197; unions, 250 lb. ASTM A 197
   Joints: Screwed.

G. Natural Gas - Above Ground:

SPEC EDITOR: UNDERGROUND NATURAL GAS PIPING IS TYPICALLY PROVIDED ONLY BY THE GAS COMPANY AND IS THEREFORE NOT ADDRESSED HEREIN. IF REQUIRED, CONSULT CODES.

1. For piping through 2”:
   Pipe: Black Steel, Schedule 40, ASTM A 53, ERW or seamless, grade B
   Fittings: Malleable iron, 150 lb. ASTM A 197; unions, 250 lb. ASTM A 197
   Joints: Screwed Terminal connections 1/2” and less: Type L Copper, annealed, ASTM B 88, 24” maximum length, flared connections
2. For piping 2-1/2” and larger
   Pipe: Black Steel, Schedule 40, ASTM A 53, ERW or seamless, grade B, standard weight for 12” and above
   Fittings: Standard weight, butt welded, black steel, ASTM A 234
   Joints: Welded. Flanged ASTM A 181, 150#, forged steel at valves, and equipment.

H. Sanitary Waste and Vent - Above and Under Ground:

SPEC EDITOR: CHOOSE ONE OF THE FOLLOWING. CI IS STANDARD, PVC IS ECONOMICAL ALTERNATIVE ACCEPTABLE IN SOME BUILDINGS.

1. Pipe: Cast Iron, Service Weight, CISPI Standard 301, ASTM A74, ASTM A888
   Fittings: Cast Iron, drainage pattern, ASTM A74, ASTM C564
   Joints: Hubless - Heavy duty, ASTM C1540 shielded couplings
2. Pipe: PVC Schedule 40, ASTM D 2665, NSF approved, type DWV
   Fittings: PVC, ASTM D 3311
   Joints: Screwed or solvent weld, ASTM D2564

LAB WASTE AND VENT: DEPENDING ON THE APPLICATION, A LOWER COST ALTERNATIVE TO CONSIDER VERSUS THE PP/FUSED JOINT PIPING LISTED BELOW IS A SOLVENT JOINT SYSTEM MADE ESPECIALLY FOR LAB WASTE, SUCH AS SPEARS LABWASTE™ CPVC PIPING.

I. Laboratory Waste and Vent - Above Ground:

1. Pipe: Polypropylene, Schedule 40, ASTM- D 4101, Type 1
   Fittings: ASTM D-4101

Joints: Mechanical joints with manufacturer's recommended seals by Orion, or fuse seal joints.
Manufacturer: Orion, Enfield, Georg Fisher Fuseal, Zurn

J. Laboratory Waste and Vent - Under Ground:

1. Pipe: Polypropylene, Schedule 80, ASTM- D 4101, Type 1
Fittings: ASTM D-4101
Joints: Mechanical joints with manufacturer's recommended seals by Orion, or fuse seal joints.
Manufacturer: Orion, Enfield, Georg Fisher Fuseal, Zurn

K. Equipment Condensate Drains, including coils and energy recovery devices - Above Ground:

1. Pipe: Type DWV Copper, hard drawn, ASTM B306
Fittings: Wrought Copper, ANSI B16.22
Joints: Soldered.

CHOOSE ONE OF THE FOLLOWING. CI IS STANDARD, PVC IS ECONOMICAL ALTERNATIVE ACCEPTABLE IN SOME BUILDINGS.

L. Storm - Above and Under Ground:

1. Pipe: Cast Iron, Service Weight, CISPI Standard 301, ASTM A74, ASTM A888
Fittings: Cast Iron, drainage pattern, ASTM-A74, ASTM C564
Joints: Hubless - Heavy duty, ASTM C1540 shielded couplings
2. Pipe: PVC Schedule 40, ASTM D-2665, NSF approved, type DWV
Fittings: PVC, ASTM D-3311
Joints: Solvent welded, ASTM D-2564

M. Sanitary and Storm Pump Pressure Piping- from pump discharge to connection to gravity main:

a. Pipe:
1) Type L Copper, hard drawn, ASTM B88; or
2) Sch. 10S Type 304L ASTM A312 seamless stainless steel.
b. Fittings:
1) For Copper Pipe: Wrought Copper, ANSI B16.22.
2) For Stainless Steel Pipe:
a) Type 304L or 316L ASTM A312 stainless steel.
b) ASTM A403 Grade WP Class S or W, ANSI B16.9.
c. Joints:
1) Copper Pipe: Soldered. May be grooved where accessible, up to 8" maximum.
2) Stainless Steel Pipe: Welded, or grooved where accessible. Weld per ASTM A312.
d. Elevator sump pumps, in plenum return locations:
1) Galvanized steel ASTM A53 pipe, standard weight, with galvanized, Gray-Iron threaded fittings: ASME B16.4, Class 125; or
2) excluding inaccessible locations, Grooved Joints - for Steel Piping may be used, with hot dip galvanized pipe and fittings (couplings may be un-galvanized).
e. Elevator sump pumps, in non-plenum return locations:
1) Schedule 40 PVC ASTM D 1785 pipe, ASTM D 2466 socket fittings, ASTM D 2464 Schedule 80 threaded fittings.

2.3 HYDRONIC, STEAM AND CONDENSATE PIPING SYSTEMS:

PROJECTS CONSIDERING THE USE GROOVED JOINTS OR COPPER PRESS FITTINGS (E.G. "PROPRESS") SHALL FIRST OBTAIN APPROVAL FROM THE U-M DESIGN MANAGER AND THE PLUMBING/FIRE PROTECTION MECH TECH TEAM. IF GROOVED JOINTS OR COPPER PRESS FITTINGS ARE NOT BEING USED, REMOVE ALL ASSOCIATED REFERENCES TO THESE ITEMS, BELOW.

A. Chilled Water - Above Ground:

1. For piping through 4":
   Pipe: Type L Copper, hard drawn, ASTM B88
   Fittings: Wrought Copper, ANSI B16.22
   Joints: Soldered through 2"; Brazed for 2-1/2" through 4"

ONLY USE THE CONTRACTORS OPTIONS BELOW WITH APPROVAL AS DETAILED IN PARAGRAPH 2.3 EDITOR'S NOTE ABOVE.

   Contractor Options:
   a. For piping 2-1/2" through 4", excluding inaccessible locations, Grooved Joints - for Copper Piping may be used.
   b. *For piping through 4", Copper press to connect fittings may be used*

2. For piping 5" and larger:
   Pipe: Black Steel, Schedule 40, ASTM A53, ERW or seamless, grade B, standard weight for 12" and above
   Fittings: Standard weight, butt welded, black steel, ASTM A234
   Joints: Welded. Flanged ASTM A181, 150#, forged steel at valves, and equipment.

ONLY USE THE CONTRACTOR OPTION BELOW WITH APPROVAL AS DETAILED IN PARAGRAPH 2.3 EDITOR'S NOTE ABOVE.

   Contractor Option: excluding inaccessible locations, Grooved Joints - for Steel Piping may be used for piping 5" through 12".

IF PROJECT HAS BELOW GROUND CHW PIPING LESS THAN 6", AMEND THE BELOW ACCORDINGLY. NOTE THAT DUCTILE IRON PIPE IS AVAILABLE DOWN TO 3" PIPE SIZE, BUT MAY NOT BE COST EFFECTIVE IN SMALLER SIZES.

B. Chilled Water - Below Ground, 6" and above

1. Piping: Ductile iron pipe, 350 PSI minimum working pressure, Class 52, AWWA C151/A21.51, cement mortar lined AWWA C104/A21.4, asphaltic coated outside.
2. Fittings: ductile iron, AWWA C110/A21.10, rated working pressure 350 psi.
3. Gaskets: SBR, AWWA C111/A21.11.
4. Joints: Mechanical joint, EBBA Iron Megalug restraint system for ductile iron pipe, AWWA C110/A21.10. Provide joints with a rated working pressure of 350 psi designed to provide a minimum of 3 degrees deflection after assembly.
5. Provide polyethylene encasement in compliance with ANSI/AWWA C105/A21.5 on the outside of the pipe.

6. Ductile iron pipe shall be manufactured in USA. Outside of pipe shall be clearly marked with pipe size, thickness, country of origin, manufacturer, year cast, and marked DI or Ductile Iron. Certification of country of origin shall be provided upon delivery.
7. Where transition to other pipe materials is necessary, termination of the ductile iron pipe shall be factory threaded and equipped with a screw-on, machine tightened, ductile iron flange that complies with ANSI/AWWA C115, similar to that available from American Ductile Iron Pipe and US Pipe. Flanges shall be designed to mate with Class 250 flanges.

C. Hot Water Heating - Above Ground:

1. For piping through 4":
Pipe: Type L Copper, hard drawn, ASTM B88
Fittings: Wrought Copper, ANSI B16.22
Joints: Soldered through 2"; Brazed for 2-1/2" through 4"

ONLY USE THE CONTRACTORS OPTIONS BELOW WITH APPROVAL AS DETAILED IN PARAGRAPH 2.3 EDITOR'S NOTE ABOVE.

Contractor Options:
a. For piping 2-1/2" through 4", excluding inaccessible locations, Grooved Joints - for Copper Piping may be used.
b. *For piping through 4", Copper press to connect fittings may be used.*

2. For piping 5" and larger:
Pipe: Black Steel, Schedule 40, ASTM A53, ERW or seamless, grade B, standard weight for 12" and above
Fittings: Standard weight, butt welded, black steel, ASTM A234
Joints: Welded. Flanged ASTM A181, 150#, forged steel at valves, and equipment.

ONLY USE THE CONTRACTOR OPTION BELOW WITH APPROVAL AS DETAILED IN PARAGRAPH 2.3 EDITOR'S NOTE ABOVE.

Contractor Option: excluding inaccessible locations, Grooved Joints - for Steel Piping may be used for piping 5" through 12":

FOR LENGTHS OF CONDENSER WATER PIPING EXPOSED TO SEASONAL DRAIN DOWN OR WHERE EXTERIOR CORROSION OF UNINSULATED CONDENSER WATER PIPING COULD PRESENT PROBLEMS, CONSIDER SPECIFYING A NONFERROUS PIPING MATERIAL, E.G. SCHEDULE 10 STAINLESS STEEL. A SAMPLE SPEC FOR STAINLESS STEEL PIPE CAN BE FOUND IN HIDDEN TEXT, BELOW.

D. Condenser Water/ Cooling Tower Water - Above Ground:

1. For piping through 4":
Pipe: Type L Copper, hard drawn, ASTM B88
Fittings: Wrought Copper, ANSI B16.22
Joints: Soldered through 2"; Brazed for 2-1/2" through 4"

SPEC EDITOR: ONLY USE THE CONTRACTORS OPTIONS BELOW WITH APPROVAL AS DETAILED IN PARAGRAPH 2.3 EDITOR'S NOTE ABOVE.

Contractor Options:
a. For piping 2-1/2" through 4", excluding inaccessible locations, Grooved Joints - for Copper Piping may be used:.

b. *For piping through 4", Copper press to connect fittings may be used*

2. For piping 5" and larger:
Pipe: Black Steel, Schedule 40, ASTM A53, ERW or seamless, grade B, standard weight for 12" and above
Fittings: Standard weight, butt welded, black steel, ASTM A234
Joints: Welded. Flanged ASTM A181, 150#, forged steel at valves, and equipment.

ONLY USE THE CONTRACTOR OPTION BELOW WITH APPROVAL AS DETAILED IN PARAGRAPH 2.3 EDITOR'S NOTE ABOVE.

Contractor Option: excluding inaccessible locations, Grooved Joints - for Steel Piping may be used for piping 5" through 12".

BELOW IS SAMPLE SPEC FOR SS PIPE, IN HIDDEN TEXT.

3. For piping 5" and larger, stainless steel pipe:
   a. Pipe: Sch. 10S Type 316L ASTM A312 seamless stainless steel.
   b. Fittings: Type 316L ASTM A312 stainless steel. ASTM A403 Grade WP Class S or W.
   c. Flanges: ASTM A182, forged, weld neck. Bolts/nuts ASTM A193/ASTM A194.
   d. Joints: welded per ASTM A312.

ONLY USE THE CONTRACTOR OPTION BELOW WITH APPROVAL AS DETAILED IN PARAGRAPH 2.3 EDITOR'S NOTE ABOVE.

Contractor Option: excluding inaccessible locations, Grooved Joints - for Stainless Steel Piping may be used for piping 5" through 12".

E. Steam - to 60 psig - Above Ground:

1. For piping through 2":
Pipe: Black Steel, Schedule 40, ASTM A53, ERW or seamless, grade B.
Fittings: Forged steel, ASTM A181, ANSI B16.11.
Joints: Screwed.

2. For piping 2-1/2" and larger
Pipe: Black Steel, Schedule 40, ASTM A53, ERW or seamless, grade B, standard weight for 12" and above
Fittings: Standard weight, butt welded, black steel, ASTM A234
Joints: Welded. Flanged ASTM A181, 150#, forged steel at valves, and equipment.

F. Steam Condensate (gravity or pumped) - to 60 psig - Above Ground:

1. For piping through 2":
Pipe: Black Steel, Schedule 80, ASTM A53, ERW or seamless, grade B.
Fittings: Forged steel, ASTM A181, ANSI B16.11.
Joints: Screwed.

2. For piping 2-1/2" and larger
Pipe: Black Steel, Schedule 80, ASTM A53, ERW or seamless, grade B.
Fittings: Standard weight, butt welded, black steel, ASTM A234.
For utility tunnels use only extra heavy weight, butt welded, black steel, ASTM A234

Joints: Welded. Flanged ASTM A181, 150#, forged steel at valves, and equipment.

G. Humidifier Piping (for steam humidifier using deionized or RO water):

1. Steam piping from steam generator to humidifier manifold:
   Pipe: Stainless steel for minimum 12" length at generator and at humidifier manifold.
   Hose: Supplied by humidifier manufacturer, continuously pitched back to humidifier and continuously supported.
   Fittings: Stainless steel.
   Joints: Screwed.
2. Condensate piping from manifold drip to generator or drain.
   Pipe: Stainless steel.
   Fittings: Stainless steel.
   Joints: Screwed.
3. Pipe and fittings: Sch. 40S Type 304L ASTM A312 seamless stainless steel pipe with ASTM A403 Grade WP Class S or W fittings.

2.4 SPECIAL PIPING SYSTEMS:

A. Refrigeration Piping - Above Ground and Under Ground:

1. Pipe: Type L or K Seamless Copper, Nitrogenized ACR, ASTM B 88 or ASTM B 280, annealed for 3/8" and smaller, hard drawn for ½" and larger. For underground piping 2" and smaller: Type K, annealed, with no fittings.
2. Fittings: ANSI B16.26 cast copper alloy refrigeration type with 45 degree flare or wrought copper ANSI B16.22 socket fittings Joints: brazed, flared (above ground only).

2.5 PIPE JOINTS:

A. Soldered Joints: ASTM B32; Alloy Sb5, (95% Tin, 5% Antimony, maximum 0.20% Lead). When recommended by the component manufacturer, use manufacturer's recommended flux. Unless noted otherwise, joints may be screwed or flanged to suit valves and equipment. Manufacturers: Engelehard "Silverbrite 100", Harris "Bridgit"

B. Brazed Joints: ASTM B32, silver brazed joints with 1000F minimum melting point, conforming to AWS - A5.8, "Specification for brazing filler metal". Classification BAg-1. For domestic potable water applications, maintain a nitrogen purge during brazing to prevent deposit formation inside the pipe. Unless noted otherwise, joints may be screwed or flanged to suit valves and equipment. Manufacturers: Lucas-Milhaupt Inc. "Sil-Fos", J.W. Harris "Stay-Silv 15" and "Safety Silv"

C. Screwed Joints: Tapered thread, ASME B1.20.1, joined with compatible compound or sealant tape applied to male thread only.

D. Welded Joints: Comply with Section II, Part C, ASME Boiler and Pressure Vessel Code for welding materials appropriate for the wall thickness and chemical analysis of the pipe being welded. Pipe and fittings shall be beveled and butt welded.

GROOVED PIPING JOINTS FOR COOPER PIPE ARE LIMITED TO 8", WHICH IS THE MAXIMUM SIZE THAT ALL THREE APPROVED MFR.S HAVE AVAILABLE.

E. Grooved Joints - for Copper Piping, maximum pipe size 8": Rolled grooves, peroxide cured EPDM gaskets, ductile iron housing (ASTM A 532 or A 536), wrought copper (ASTM B 75, ANSI B16.22) or cast bronze fittings, rated for minimum 300 psi working pressure at 250°F, when used with grooves that comply with AWWA C606. Grooved system/components shall provide rigid installation. UL and UPC approved. Utilize manufacturer's recommended gasket lubricant. Brazed Class 150 ANSI B16.24 cast bronze flanges (or copper companion flange by CTS Fabrication USA) must be used at any component requiring a flanged connection. Clamp-on branch outlets are prohibited. Exact gasket material and style shall be as recommended by the coupling manufacturer for the service, and NSF/ANSI-61 Annex G and NSF/ANSI-372 listed when used for potable water. On potable water service, provide non-standard gasket styles that close off and isolate gasket cavities from the water in the pipe. The manufacturer of the couplings and the fittings shall be the same. The same grooved component manufacturer shall be provided for the entire scope of the work, for each system.

1. The following manufacturers and coupling model numbers are permitted, provided they comply with all the above: Victaulic Style 607; Tyco Grinnell 672 or 640.
2. For copper piping in tunnels: Victaulic Style 607 only.

GROOVED JOINTS FOR STEEL PIPE ARE LIMITED TO 12". THE PRESSURE RATING OF GROOVED COUPLINGS DECREASE ABOVE 12" PIPE SIZE, AND VARIES BY COUPLING MFR. REVISE BELOW CAREFULLY IF USING GROOVED JOINTS ABOVE 12" PIPE SIZE.

F. Grooved Joints - for Steel Piping, for maximum pipe size of 12": Rolled or cut grooves, peroxide cured EPDM gaskets, ductile iron coupling and fittings (ASTM A532 or A536), rated for minimum 400 psi working pressure at 250°F, when used with grooves that comply with AWWA C606. Grooved system/components shall provide rigid installation. UL and FM approved. Utilize manufacturer's recommended gasket lubricant. Welded flanges must be used at any component requiring a flanged connection. Clamp-on branch outlets are prohibited. Exact gasket material and style shall be as recommended by the coupling manufacturer for the service. The manufacturer of the couplings and the fittings shall be the same. The same grooved component manufacturer shall be provided for the entire scope of the work, for each system.

1. The following manufacturers and coupling model numbers are permitted, provided they comply with all the above: Victaulic Style 07 or 107; Tyco Grinnell Fig. 740 or 772.

ALTHOUGH THE BELOW ARTICLE CALLS FOR 300 PSI WORKING PRESSURE FOR STAINLESS STEEL FITTINGS UP TO 12", THE PRESSURE RATING OF GROOVED COUPLINGS IS OFTEN LESS ABOVE 8" PIPE SIZE, AND VARIES BY COUPLING MFR. REVISE BELOW CAREFULLY IF USING S.S. GROOVED JOINTS ABOVE 8" PIPE SIZE.

G. Grooved Joints - for Stainless Steel Piping, for maximum pipe size of 12”: Rolled grooves, peroxide cured EPDM gaskets, galvanized ductile iron (indoor piping only) or stainless steel couplings, minimum sch. 10 stainless steel fittings. Provide stainless steel nuts and bolts when couplings are stainless steel. Couplings and fittings rated for a minimum 300 psi working pressure at 250°F. Grooved system/components shall provide rigid installation. NSF/ANSI-61 Annex G and NSF/ANSI-372 listed when used for potable water. On potable water service, provide non-standard gasket styles that close off and isolate gasket cavities from the water in the pipe. Welded flanges must be used at any component requiring a flanged connection. Clamp-on branch outlets are prohibited. Exact gasket material and style shall be as recommended by the coupling manufacturer for the service. Utilize manufacturer’s recommended gasket lubricant. The manufacturer of the couplings and the fittings shall be the same. The same grooved component manufacturer shall be provided for the entire scope of the work, for each system. Use the manufacturer’s required roll sets for stainless steel pipe.

1. The following manufacturers and coupling model numbers are permitted, provided they comply with all the above: Victaulic Style 89 (indoor), Style 489 (outdoor); Tyco Grinnell Fig. 770 (indoor), Fig. 772 (indoor), Fig. 472 (outdoor).

THE FOLLOWING JOINING METHOD IS UNDER CONSIDERATION: USE PRESS JOINTS ONLY WHERE APPROVED BY U-M PROJECT MANAGER AND THE PLUMBING/FIRE PROTECTION MECH TECH TEAM.

H. Press Joints:

1. Limited to a maximum pipe size of 4”.
2. Rated for a minimum 200 PSI working pressure from -4°F to 250°F.
3. Compatible with seamless type K, L, and M copper tube conforming to ASTM B88.
4. Fittings shall be a minimum 78% copper and a maximum of 15% zinc, alloyed to prevent dezincification.
5. Fittings shall conform to the material and sizing requirements of ASME B16.18 or ASME B16.12.
6. Seals/O-rings shall be peroxide cured EPDM.
7. Joints shall be pressed using the tool approved by the manufacturer.
8. Provide press fittings from the same manufacturer for the entire scope of the work, for each system.
9. For piping 2" and smaller, non-fitting components such as valves, strainers, check valves, etc. manufactured by the press fitting manufacturer may be used provided:
   a. the press fitting manufacturer is approved for those components elsewhere in the specifications
   b. such components fully comply to the requirements of the respective specification section for the component.
10. Approved fitting, tool, and process:
    a. Viega ProPress
    b. NIBCO Press System.
    c. Apollo Xpress

I. Flanged Joints:

1. Select flange and gasket materials to suit service of piping and to comply with the respective ASME B31.1 or B31.9 piping standard.
2. For steel pipe, provide raised face ANSI B16.5 compliant steel flanges.
3. For copper pipe, provide Class 150 flat face ANSI B16.24 cast bronze flanges, brazed to the copper tube.
   a. Alternative: Copper companion flange by CTS Fabrication USA rated 450 PSI minimum working pressure from -66°F to 272°F. ANSI B16.5 compliant, powder coated, with an EPDM insulator adhered to the plate steel flange protruding inside of the flange to prevent contact with the copper companion flange adapter. Flange adapter shall be manufactured to ASME B16.22, brazed to the copper tube.
4. Gaskets shall conform to respective ANSI Standards, A21.11, B16.20, B16.21. Gaskets in steam and condensate lines shall be "FLEXTALLIC", 316 L stainless steel with "FLEXICARB" filler. Flange gaskets for domestic hot water shall be 100% PTFE. For butterfly valves on replaceable seat side with interfering set-screws, provide Garlock Style 9800.
5. Flange Bolts and Nuts: ASME B18.2.1, carbon steel, unless otherwise indicated. Central Power Plant and Tunnels: Provide ASTM A193 B7 bolts and studs with ASTM A194 grade 2H heavy hex nuts.

J. Hubless Joints for Cast Iron No-Hub Pipe: Heavy duty ASTM C1540 couplings with stainless steel shield with stainless steel bands and tightening devices, ASTM C564 rubber sleeve with integral center pipe stop.

1. When connecting cast iron no-hub pipe to dis-similar pipe: Provide ASTM C1460 couplings specifically designed for both pipe types, with stainless steel shield with stainless steel bands and tightening devices, with ASTM C564 rubber sleeve with integral center pipe stop. Unshielded couplings shall not be used. *Connections between dis-similar pipe materials shall be restrained.* Submit coupling and restraint methods for approval.
2. Approved Manufacturers:
   a. Anaco/Huskey
   b. Clamp-All Corp.
   c. Ideal Tridon
   d. Mission Rubber Company (MCP Industries Inc.)

K. Solvent Cement Joints: Select materials suitable for pipe materials joined and compatible with fluid served. Conform to respective ASTM Standards D-2235, D-2564, D-2855 and D-3138.

L. Gasket Joint Lubricant - for use with grooved and hubless joints: Provide manufacturer's recommended gasket lubricant.

2.6 MECHANICALLY FORMED TEE CONNECTIONS IN COPPER PIPING:

THE T-DRILL TOOL HAS BEEN DEMONSTRATED AT UM A&E, AND TO PLANT, AND SEEMS TO HAVE APPROPRIATE APPLICATIONS. THE SPEC BELOW LIMITS T-DRILL'S USE. FORWARD COMMENTS AND EXPERIENCES TO THE SPEC TEAM.

A. Contractor may use mechanically formed Tee connections in copper piping in lieu of tee fitting only where main piping is 2 1/2" or larger and where branch connection is 3/4" or smaller. Joint must be brazed. Tool manufacturer: T-Drill.

2.7 UNIONS:

A. Unions in steel piping systems shall be malleable iron with ground joints made between two bronze inserts.

B. Unions in copper piping systems shall be wrought copper or brass with sweat ends.

2.8 PIPE HANGERS AND SUPPORTS:

PIPE HANGER MODEL NUMBERS, SPACING, AND APPLICATION OF HANGERS AND SUPPORTS MUST BE ADDRESSED IN DRAWINGS, IT IS NO LONGER INCLUDED HEREIN. SOME DETAILS MAY BE AVAILABLE ON THE U-M AEC WEBSITE.

A. Provide adjustable type pipe hangers, supports and accessories for the proper support of all piping. See details on drawings for requirements. Figure and model numbers specified on drawings are for Anvil International, and Pipe Shields Inc. Equivalent products by Carpenter & Paterson, Cooper B-line and PHD Manufacturing are also acceptable. Continuous threaded rod shall be used for intermediate attachments.

B. Dielectric protection for hangers and supports: Where copper piping is supported with steel hangers and supports, dielectric protection must be provided. Use one of the following means as applicable:

1. Coated hangers (copper or plastic coating)
2. Insulation inserts
3. Cushion clamps
4. Other as approved by Engineer.

2.9 THERMAL-HANGER SHIELD INSERT ASSEMBLIES

A. Except as noted, thermal hanger shield “insert” assemblies shall be used on all insulated pipe systems at each horizontal support, and at each clamped or guided vertical support. Manufactured units shall comply with MSS SP-58 standards and be tested per MSS SP-89 guidelines. Each assembly shall closely fit the various pipe diameters and match the outside diameter of the adjoining pipe insulation. Provide pre-grooved inserts when piping is heat traced. Compressive strength shall be adequate to prevent deformation at the project’s hanger spacing requirements, with a minimum 3:1 safety factor.

B. Thermal hanger shield insert assembly: Water-repellent treated, ASTM C 533, Type I calcium silicate, asbestos free insert. With G-90 galvanized sheet metal shield. With attached vapor barrier, where indicated. Each component shall have an ASTM E84 flame/smoke rating maximum of 25/50.

C. Inserts for Cold Piping (piping conveying materials less than or equal to 60F), including all chilled water and domestic cold water piping: Insert with an attached vapor barrier.

1. Provide insert and sheet metal shield covering entire circumference of pipe.

D. Inserts for Hot Piping (piping conveying materials at more than 60F): Insert only.

1. For clevis or band hangers that support pipe from bottom: Insert and sheet metal shield shall cover lower 180 degrees of pipe, or entire circumference of pipe.
2. For trapeze hangers or clamped pipe: Insert and sheet metal shield shall cover entire circumference of pipe.

E. Inserts for piping less than 3/4-inch diameter: Not required except for piping conveying materials less than 45°F.

F. Minimum Compressive Strength of Insert Material:

1. 100 psig for sizes smaller than NPS 6.
2. 600 psig for sizes NPS 6 and larger.

G. Insert Length: Extend 2 inches beyond sheet metal shield.

H. Vapor barrier: meeting ASTM C1136, with 0.02 perms maximum water vapor permeance.

I. Adhesives shall comply with NFPA 90-A.

J. Sheet Metal Shield Dimensions for Pipe: Not less than the following:

1. NPS 1/4 to NPS 3-1/2: 12 inches long and 0.048 inch thick.
2. NPS 4: 12 inches long and 0.06 inch thick.
3. NPS 5 and NPS 6: 18 inches long and 0.06 inch thick
4. NPS 8 to NPS 14: 24 inches long and 0.075 inch thick
5. NPS 16 to NPS 24: 24 inches long and 0.105 inch thick

K. Manufacturers

1. Cooper B-Line
2. Pipe Shields Inc.
3. Rilco Manufacturing Company
4. Value Engineered Products.
5. American Mechanical Insulation Sales

2.10 PIPE SLEEVES:

NOTE THAT SLEEVE DETAILS MUST APPEAR ON DRAWINGS, INCLUDING UNDERGROUND DETAILS IF APPLICABLE.

A. Furnish and set pipe sleeves per details on drawings.

2.11 DIELECTRIC FITTINGS:

A. For pipe 2 inch and less: Provide brass coupling. (Dielectric unions are not acceptable).

B. For pipe 2-1/2 inch and larger: Provide flange union with dielectric gasket and bolt sleeves. On copper pipe, copper companion flanges by CTS Fabrication USA may be used.

C. Dielectric waterways are prohibited for all joint systems.

2.12 STRAINERS:

A. Body shall be bronze, cast steel or cast iron, to match piping materials. Strainers shall be same size as piping, with screwed connections on piping 2" and smaller, and flanged connections on piping 2-1/2" and larger. Where grooved piping is specified, grooved joint strainers may be used. Screen free area shall be a minimum of twice the internal cross sectional area of the piping where installed. Pressure rating shall be that of piping system, minimum Class 125. Provide 3/4" ball valve blow down with hose end connection on all strainers 2" and larger.

B. For water, steam and condensate service, screen material stainless steel, with maximum openings of 1/32 (0.031) inches for pipes 2" and smaller and 3/64 (0.047) inches for pipe sizes 2-1/2" and larger.

C. For air and gas service, screen material stainless steel, with maximum openings of 0.006 inches for pipes 2" and smaller and 0.009 inch for pipe sizes 2-1/2" and larger.

D. Approved Manufacturers: Armstrong, Anvil International, Keckley, Metraflex, Mueller, Spirax-Sarco, Victaulic, Watts, Yarway.

2.13 FLEXIBLE PIPING CONNECTORS:

A. Refer to Related Section 220548 - Vibration Control.

2.14 PIPE ANCHORS:

A. Provide pipe anchors where shown and as detailed on drawings.

2.15 PIPING TRANSITIONS:

A. For transitions between ductile iron pipe and other pipe materials, refer to the requirements for hubless joints found elsewhere in this specification.

B. When two different pipe materials must be joined such as cast iron, clay, steel, copper or plastic, provide transition fittings specifically designed for that purpose and that are manufactured in compliance with the standards relevant for the pipes joined. Transitions shall have equal corrosion resistance to the pipes joined.

C. For dissimilar metal connections, see "Dielectric Fittings".

2.16 SLEEVE-SEAL SYSTEMS

A. Approved Manufacturers:

1. EnPro Industries "Link Seal"
2. Advance Products & Systems, Inc.
3. Metraflex Company (The).
4. Proco Products, Inc.

B. Description: Modular sealing-element unit, designed for field assembly, for filling annular space between piping and sleeve. Shall provide a water-proof seal between the pipe and sleeve at up to 20 psig head pressure. Each link and pressure plate shall include permanent identification of size and manufacturer's name. Manufactured in an approved ISO-9001:2000 facility.

C. Sealing Elements: EPDM-rubber interlocking links shaped to fit surface of pipe.

D. Pressure Plates: Molded of glass reinforced nylon.

E. Connecting Bolts and Nuts: Mild steel with a 60,000 psi minimum tensile strength and 2-part Zinc Dichromate coating per ASTM B-633 and Organic Coating, tested in accordance with ASTM B-117 to pass a 1,500-hour salt spray test. Of length required to secure pressure plates to sealing elements.

F. Sleeves:

1. Galvanized steel, ASTM A53/A53M, Schedule 40, with plain ends and welded steel collar, zinc coated. Steel Sleeve sizes 12" and larger shall be 0.375" thick or standard pipe wall thickness. Sleeves through wall shall be cast in place and the pipe shall be installed centered in the sleeve. Provide 2" collar (water-stop) of steel to match sleeve, welded all around on both sides to the sleeve at the point on the sleeve that positions it at the mid-point of the structural wall when the sleeve is in place.
2. Molded non-metallic high density polyethylene sleeves (HDPE) with integral hollow, molded water-stop ring four inches larger than the outside diameter of the sleeve itself. End caps and reinforcing ribs, manufactured in an approved ISO-9001:2000 facility. With nailer flange.

PART 3 - EXECUTION

3.1 GENERAL PIPING INSTALLATION REQUIREMENTS:

A. Work shall be done in accordance with applicable ordinances and codes. Arrange for inspections.

B. For domestic potable water applications, maintain a nitrogen purge during brazing to prevent deposit formation inside the pipe, so that the inner pipe surface remains clean. Properly ventilate the area outside the pipe to avoid unsafe levels of nitrogen.

C. Install pipe components and joining systems in accordance with the manufacturer's installation instructions.

D. Install piping to permit complete draining. Provide capped hose end ball type drain valves at all low points.

EXPANSION OF PIPING MUST BE CONSIDERED IN DESIGN, AND ENGINEERED ON DRAWINGS, INCLUDING DIMENSIONED EXPANSION BENDS IF APPLICABLE.

E. If water (flushing water, closed loop system water, blow down, etc.) or hydronic system fluids have a pH between 5.0 and 10.0 and meets the requirements of City of Ann Arbor Sewer Use Ordinance, it may be discharged to the sanitary sewer. If the water does not meet the sewer discharge limits, contact U-M Environment, Health and Safety (EHS) Hazmat at 763-4568 for proper disposal. City of Ann Arbor Sewer Use Limitations (Chapter 28 Sewage and Sewage Disposal, subsection 2:43.1. Prohibited discharges.) can be found at:

1. http://www.municode.com/resources/gateway.asp?pid=11782&sid=22
2. or by contacting U-M EHS - Environmental Protection & Permitting Program at 936-1920.

F. Installed piping shall be free from sagging. Provide for expansion and contraction of piping in an approved and safe manner by means of loops or offsets, where mechanical expansion joints are not specifically called for.

G. Branch connections from horizontal steam, steam condensate, and gaseous system mains shall be taken off the top, up at a 45-degree angle, or off the side.

H. Branch connections from horizontal hydronic system mains shall not be taken off the main bottom, or at less than 45 degrees from horizontal.

I. Branch piping shall be valved at the branch connection points.

J. Provide fittings and specialties necessary to properly interconnect all items, whether or not shown in detail.

K. Piping shall remain protected and capped until just prior to connection. Immediately after assembly, restore all protection and cap unprotected ends to prevent odors, dust, moisture, and other debris from entering the piping system.

L. Clean and swab-out all piping before installation.

M. Lay out pipe lines straight, plumb and in true alignment. Offset as required to avoid interference with other work, to conceal piping, to allow maximum headroom and to avoid interference with windows and doors. Lay out all pipes and establish their levels from bench marks, existing floors or finished grades.

N. Piping shall be concealed unless indicated otherwise on drawings. Do not conceal piping until it has been inspected, tested, flushed and approved.

O. Use eccentric reducing fittings to increase or decrease pipe sizes. Bushings are not acceptable. Orient reducers to prevent trapping of water.

P. Lubricate flange bolts and install with hardened flat washers. Use a torque wrench to tighten flange bolts to the gasket manufacturer's recommended torque.

Q. Locate groups of pipe parallel to each other, spaced to permit applying insulation and servicing of valves. Install hot and cold water lines at least 6 inches apart.

R. Install piping at least 3 inches clear of electrical conduit. Do not install pipe within the National Electrical Code (NEC) working space zone of electrical equipment. Examples:

1. Above the footprint of electrical equipment in the zone extending 6’ above the installed height of the equipment.
2. Within the NEC working space in front of the electrical equipment. NEC working space varies depending on voltage and other factors, typically for equipment 600 volts or less it extends from the floor to the height of the equipment or 6’-6”, whichever greater, 3’-6” in front of the equipment, and for the width of the equipment or 30”, whichever is greater.

Verify NEC clearance requirements prior to installing work. Note that variable frequency drives are considered electrical equipment.

S. Pipe extending into finished areas shall have chrome plated escutcheons large enough to cover pipe sleeves and shall fit snugly over pipe or insulation.

T. Pitch piping as follows, but not less than required by code:

1. Hydronic piping up in direction of flow at 1/16” per foot
2. Steam piping down in direction of flow at 1/16” per foot
3. Vent piping back toward waste at 1/16” per foot
4. Waste, condensate and compressed air piping down in direction of flow at 1/8” per foot.

U. Join hubless, cast-iron soil piping according to CISPI 310 and CISPI's "Cast Iron Soil Pipe and Fittings Handbook" for hubless-piping coupling joints.

1. Support vertical pipe at no less than every floor level, at the base of each riser, and at every riser offset.
2. Support horizontal pipe 5" diameter and greater with a minimum of two pipe hangers between couplings, except sections of pipe less than 4 feet in developed length are permitted to be supported with no less than one hanger between couplings.
3. All horizontal piping 5" diameter and greater shall be restrained or braced to prevent movement at each joint at every direction change and at each branch connection.
4. Provide pipe hangers to support every horizontal branch connection; provide sway bracing when pipe is suspended in excess of 18" by non-rigid hangers, and comply with all other bracing, support, and installation recommendations and suggestions in the CISPI Handbook.
5. Provide hangers and supports to eliminate all misalignment at couplings.
6. Tighten all clamps to coupling manufacturer's recommended torque, using a torque wrench.
7. *Joints between dis-similar pipe materials shall be restrained.*

V. Sanitary and storm piping shall be anchored upstream of the first coupling at the point of building exit (interior side) to prevent movement due to back surges, by permanent blocks, bracing, threaded rodding anchored to the exterior wall, or other suitable means.

3.2 NATURAL GAS PIPING INSTALLATION REQUIREMENTS:

A. Install, inspect, test, and purge natural gas systems in accordance with NFPA 54, and local utility requirements.

SPEC EDITOR: INDICATE ON THE DRAWINGS, THE ROUTING AND TERMINATION LOCATION OF THE CONDUIT VENT PIPE.

B. Gas piping in air plenum ceilings shall be continuously welded or installed in air-tight conduit constructed of Schedule 40 seamless black steel pipe with welded joints. Vent conduit to the outside and terminate with a screened vent cap. Valves shall not be installed in plenums.

C. Drips and Sediment Traps: Install a drip leg at inlet to terminal equipment, points where condensate may collect, and at the outlet of the gas meter. Do not install drips where condensate is likely to freeze. Construct drips using a tee with plugged or capped bottom outlet. Drip shall be minimum of 3 pipe diameters long, same size as pipe. Locate drips to permit cleaning and emptying.

3.3 UNDERGROUND PIPING INSTALLATION REQUIREMENTS

A. Piping below grade intersecting tunnel walls, basement walls, or penetrating floors, shall be run through a sleeve seal system.

1. Size sleeves and select sleeve seal links per sleeve seal manufacturer’s recommendations.
2. Install sleeves and seals per manufacture’s recommendations. Center sleeve water stops at midpoint of wall/floor thickness. Provide temporary support to avoid sleeve collapse during pours.

B. Record as-built sketches and dimensions prior to backfilling.

3.4 GROOVED PIPING

A. Install couplings from the same manufacturer as the grooved fittings. The same grooved component manufacturer shall be installed for the entire scope of the work, for each system.

B. Groove pipe per manufacturer’s requirements. Grooving tools shall be the same manufacturer as the couplings and fittings. Use special roll sets for copper and stainless steel pipe when required by the manufacturer.

C. Lubricate gaskets with manufacturer’s recommended gasket lubricant. Use NSF-61 approved lubricant for domestic water piping.

D. Allow room for pipe expansion for couplings that allow pipe ends to separate before the joint acts in a fully restrained manner, for example, certain couplings used on stainless steel pipe.

E. Tighten coupling as recommended by the manufacturer. Use a torque wrench and tighten bolts to required torque level when required by the manufacturer.

3.5 WELDING:

A. All welding shall be performed by registered welders qualified to perform welding operations in accordance with the National Certified Pipe Welding Bureau's procedures and standards, ASME Code Standards and the HPACCNA Standard Manual of Welding.

B. Submit a certified copy of "Record of Pipefitter Welder Performance Qualification Test" of any employees who will be doing welding on this project.

C. No welding to building work shall be allowed without approval of Engineer.

D. Except where prohibited by the Reference Standards, code, or ordinance, Black steel piping larger than 6-inch diameter may be welded with chill rings.

SPEC EDITOR: DELETE THE FOLLOWING PARAGRAPH IF NO STEAM OR CONDENSATE OVER 15 PSIG

E. Mitered turns will not be allowed. Turns shall be made with factory-made ASME B16.9 long radius wrought steel buttwelding fittings.

F. Except where prohibited by the Reference Standards, code, or ordinance, branch take-offs with manufactured formed nipples will be permitted provided nipple size is at least two pipe sizes smaller than the main size. Formed nipples shall be Bonney Forge "Weldolets", "Threadolets", "Sockolets". In all other cases, use factory-made ASME B16.9 wrought steel buttwelding tee fittings.

G. Shop welded pipe assemblies shall have all welds plainly stamped by the welding operator for inspection by the Engineer before installation.

3.6 SPECIAL WELDING REQUIREMENTS (FOR WORK LOCATED IN TUNNELS):

THIS ARTICLE IS REQUIRED FOR ALL TUNNEL PROJECTS. EDIT NUMBER OF WELDS AS NECESSARY FOR SCOPE OF PROJECT. THIS ARTICLE IS NOT NORMALLY REQUIRED FOR MOST NON-TUNNEL PROJECTS. IT CONTAINS ADDITIONAL WELDING REQUIREMENTS FOR SPECIAL CONDITIONS.

A. Examine all welds by physical method. Include the cost of examining 5% of welds (but a minimum of 2 welds) to be selected by the Engineer, by approved graphic method similar to gamma ray process.

B. The radiographic examination shall be by technicians of a reputable company regularly engaged in this type of work and skilled in the use of interpretation of results of this type of examination.

C. The process shall provide visual proof at the site and such proof on photographs with reports which shall become the property of the Owner and will be included in the final Contract Documents.

D. The report on the interpretation of the radiographic examination shall state whether or not the quality of the welding is suitable for the service for which the piping was designed.

E. Welds examined by the above process shall be identified by a number and service symbol and shall be stamped into pipe adjacent to weld at the time of examination

F. Failure to pass this test shall be cause for the rejection of the weld and authority to examine an additional weld. Rejected welds shall be repaired by an approved method and proven satisfactory by radiographic examination.

G. If a second weld proves unsatisfactory by the radiographic examination, all welds shall be X-Rayed. Any welds proved unacceptable shall be repaired and X-Rayed again at no additional expense to the Owner.

3.7 PROTECTION AGAINST FREEZING:

A. At any time that any of the piping is full of water for testing purposes or otherwise prior to actual heated operation, the system shall be protected against freezing by the introduction of pre-mixed propylene glycol type anti-freeze which will be flushed out before acceptance. Provision for introducing anti-freeze shall be made by means of valved connections to the system in an acceptable manner.

3.8 INSTALLATION OF PIPE HANGERS AND SUPPORTS:

A. Arrange pipe hangers and supports to permit proper pitch of piping, free to move with pipe expansion, installed at proper intervals to totally prevent sagging and attached to building construction through approved means. Hangers shall be located near or at changes in piping direction and concentrated loads. Valves, strainers, in line pumps and other heavy equipment shall be supported independent of the pipes. After systems have been installed and filled adjust hangers and supports to evenly distribute weight, and maintain proper pitch. Refer to drawings for pipe hanger and support details.

PARA. B MAY BE CONSERVATIVE, REVIEW AND EDIT, OR DETAIL ON DRAWINGS

B. Vertical Piping: When support locations are not indicated on the drawings, support piping at every floor level.

NOTE THAT HANGER SPACING IS TO APPEAR ON THE DRAWINGS - OR "APPLICABLE CODES" WILL DICTATE

C. Horizontal Piping Hanger Spacing: Space hangers in compliance with schedule on drawings and applicable codes, or per MSS SP-89, which ever results in shortest spacing.

D. For cold piping, install hangers and supports to maintain an effective continuous thermal and vapor barrier between cold piping and hangers and supports.

THE BELOW REQUIREMENTS FOR PLASTIC PIPE ARE GENERAL IN NATURE. THE DESIGNER SHOULD CAREFULLY SPECIFY HANGERS AND SUPPORTS AND PROVIDE DETAILS TO ASSURE PROPER SUPPORT AND TO ACCOMMODATE THE THERMAL EXPANSION OF PLASTIC PIPE.

E. Plastic Piping: Hang and support in compliance with manufacturer's recommendations. At hangers and supports, including "Unistrut®" style channel supports, install to prevent plastic pipe contact with metal (exception: angle iron may be used for continuous support, provided all sharp edges are removed). Anchor piping only where required for expansion loops or to protect against pressure surges, etc. Compression style clamps/supports shall not be used. Use plastic pipe sleeves or equivalent as guides at all other locations, to allow longitudinal thermal expansion and to prevent lateral pipe movement. Compression style riser clamps shall not be used, use other support methods such a supporting at fitting shoulders. Support valves and other significant weight components independent of pipe. Space hangers no farther than manufacturer's recommendations for the application temperature but in no case farther than recommended for 100 deg. F application temperature. Continuously support all piping 1.5-inch nominal diameter or less (exception: PVC pipe connected to sump pumps). Provide thrust restraints where piping is subject to cyclic pressure surges, e.g. on/off pump applications.

3.9 INSTALLATION OF PIPE SLEEVES:

A. Install pipe sleeves where piping passes through building construction including all walls, floors and ceilings.

B. For new wall construction, promptly and accurately locate and securely set sleeves in forms before concrete is poured. For masonry construction, set the sleeves over the piping for Masonry Contractor to build around.

3.10 INSTALLATION OF STRAINERS:

A. Provide Y-strainers in steam, condensate, or water piping preceding control valves, traps, pumps, pressure regulating valves and elsewhere as shown on drawings.

B. Install strainer elements prior to flushing piping. Remove, clean and reinstall during flushing.

3.11 TRENCHING AND BACKFILLING:

USE THIS ARTICLE ONLY IF NOT COVERED IN ANOTHER DIVISION.

A. All trenching and backfilling required for the proper installation of the work shall be done as prescribed in other Divisions.

B. Excavate trenches so that pipe can be installed at proper depth. Lay pipe on a firm bed bearing its full length except at the bell. Where sewers are installed in backfilled areas, provide machine tamping and be responsible for any settling at, or rupture to the sewer work. Keep trenches water free and as dry as possible during bedding, laying and jointing. After the joints are made, place sufficient backfill along each side of pipe to offset conditions that might tend to move the pipe off line and grade.

C. Backfill only after pipes have been tested, inspected and approved.

D. Piping encountered in excavating, (if shown on the drawings or not), shall be supported, and protected from damage. If utility lines are encountered, notify the Owner's Representative and do not disturb the lines unless so directed. If existing utility lines are damaged during excavations, immediately repair the lines at no cost to the Owner.

E. Storm and sanitary piping may be installed side by side in same trench. Water piping may be installed in same trench with drainage piping, provided trench is benched so the water pipe may be laid on a shelf of firm earth not less than eighteen inches (18") above top of drain pipe.

F. No excavation for pipe shall be made in filled or disturbed earth until it has been compacted as directed.

G. Restore street pavements, curbs and sidewalks disturbed in the performance of this work. Restore in a manner prescribed by authorities having jurisdiction.

H. Where mains are to pass under roadways or in any locations where open ditches are dangerous or undesirable, the work is to be installed by tunneling. In all other locations, excavations shall be done by the open trench method and to the depths and widths as may be necessary. All material excavated shall be deposited on the sides of the trenches and beyond the reach of slides.

I. Supports:

1. Where lines pass under footings for walls or columns, or lower than adjacent footings, backfill trenches with concrete up to the level of the bottom of the footings.
2. Where pipes pass over column footings, or are laid in filled ground, or above the original natural grade, or in soil of insufficient bearing quality, or in other cases where necessary, they shall be supported by creosoted timbers carried by brick piers or piles or other approved supports carried down to firm bearing as approved.

J. Provide shoring, bracing or sheet piling necessary to maintain the banks of the excavations, or tunnels. Take same out as the work is backfilled. Shoring must prevent any movement of the trench banks and strains on the piping and utility lines.

3.12 FLUSHING AND CLEANING OF PIPING:

A. Flush and clean the following piping systems:

CUSTOMIZE FOR SPECIFIC PROJECT, IN CONJUNCTION WITH COMMISSIONER.

Domestic Cold Water (flush only)
Domestic Hot Water (flush only)
Steam and Condensate (flush only)
Chilled Water Supply and Return (flush and clean)
Heating Hot Water Supply and Return (flush and clean)
Cooling Tower Water Supply and Return (flush and clean)

B. Develop plan for flushing and cleaning piping. Submit plan for approval prior to completion of piping. Provide all temporary and permanent piping, equipment, materials necessary to complete flushing and cleaning.

C. Prior to flushing, swab out underground piping to remove all particulate.

D. Prior to flushing, temporarily remove, isolate or bypass dirt sensitive equipment and devices, including the following:

LIST BELOW TO SUIT PROJECT

1. Automatic flow control valves
2. Heating and cooling coils
3. Boilers
4. Chillers
5. Heat exchangers
6. Flow measuring devices

Reinstall after flushing is complete.

E. Prior to flushing, install fine mesh construction strainers at inlet to all equipment. Install fine mesh construction element in permanent strainers. During flushing and cleaning, remove and clean strainers periodically. At completion of final flush, clean permanent strainers, remove construction strainers.

CUSTOMIZE THE FOLLOWING PARAGRAPH IN CONJUNCTION WITH U-M PROJECT MANAGER AND COMMISSIONER. IDEALLY, PIPING SHOULD BE FLUSHED A MINIMUM OF ONE HOUR AT 6' PER SECOND. IN PROJECTS WHERE THIS IS SPECIFIED AND NO WATER SOURCE IS IMMEDIATELY AVAILABLE, HAVE CONTRACTOR PROVIDE SOURCE OF WATER, PIPING, HOSES AND PUMPS AS REQUIRED TO FLUSH PIPING.

F. Flushing for new piping: Flush all piping with cold water (or fire protection system where approved by owner) for a minimum of one hour, until water runs clear. Water supply shall be equivalent to piping to be flushed. Use (2) 2-1/2" fire hose connections for piping 3" and larger. Drain all low points.

THE FOLLOWING PARAGRAPH IS TYPICALLY USED FOR CLEANING A COMPLETE HYDRONIC SYSTEM USING SYSTEM PUMPS, CIRCULATING THROUGH THE ENTIRE SYSTEM. NOT APPLICABLE FOR MINOR PIPING MODIFICATIONS.

G. Chemical Cleaning for new and existing hydronic piping: Where flushing could not be completed at 6 feet per second, or where chemical cleaning is required for new and existing piping, circulate flush water and clean strainers prior to installing cleaning chemicals. Provide cleaning chemicals, under the direction of the owner's chemical supplier. Following flushing, install cleaning chemicals and circulate through the entire system for a minimum of one hour, or as directed by chemical supplier. Take water sample for owner's use. Drain system, including all low points. Flush, drain and fill system, circulate for one hour, sample for owner's use. Drain, flush, fill, circulate and sample until system is free of cleaning chemicals, as indicated by owner's analysis of samples.

EDIT BELOW, ADD ESTIMATED SYSTEM VOLUME.

1. Estimated system volume for Hot Water Heating System:
2. Estimated system volume for Chilled Water System:

3. Estimated system volume for Condenser Water System:

THE FOLLOWING PARAGRAPH IS NOT TYPICALLY USED. DELETE, OR EDIT CAREFULLY FOR SPECIFIC PROJECT

H. Special Provisions for Chemical Cleaning: Provide temporary pumps and piping to chemically clean piping at a minimum velocity of 6 fps without using the system pumps. Otherwise comply with chemical cleaning requirements stated above. These special provisions are required for the following piping systems:

1. _____
2. _____
3. _____

THE FOLLOWING PARAGRAPH IS NOT TYPICALLY USED. DELETE, OR EDIT CAREFULLY FOR SPECIFIC PROJECT

I. Provide temporary bypass piping around the following equipment:

1. _____
2. _____
3. _____

3.13 PIPING SYSTEMS PRESSURE TESTING

A. General

1. Test new systems only, from point of connection to the existing systems. Perform initial tests and correct deficiencies prior to requesting acceptance test.
2. Perform acceptance pressure tests in the presence of the authorities having jurisdiction. Acceptance tests must be satisfactorily completed before piping surfaces are concealed.
3. Pneumatic tests shall be conducted using dry, oil free compressed air, carbon dioxide or nitrogen. Evacuate personnel not directly involved in testing prior to performing pneumatic testing. Perform testing in two stages, initial and acceptance. Conduct initial testing at 5 PSI or less. Swab joints with a commercial leak detector. Repair deficiencies prior to testing at higher pressures. Under no circumstances shall plastic piping of any type be pneumatically tested, including pre-acceptance tests.
4. Components shall be removed or isolated during testing if damage may occur due to test pressure and/or test media.
5. Existing steam and hot water piping connected to piping to be tested shall be shutoff, drained and cooled before testing.

B. Acceptance Pressure Testing:

NOTE THAT THIS SPEC DOES NOT INDICATE ACTUAL PRESSURE TESTING VALUES. IT IS NECESSARY TO INCLUDE A PRESSURE TEST TABLE, SUCH AS THAT AVAILABLE FROM THE U-M AEC WEBSITE, ON THE PROJECT DOCUMENTS. EDIT THE TABLE TO MAKE IT PROJECT SPECIFIC. ALSO EDIT BELOW PARAGRAPH AS APPROPRIATE.

1. Perform acceptance pressure testing per table found on the drawings, or if a table is not provided, per UM website: http://www.umaec.umich.edu/for.archs/StandardDetails.html.
2. Remake leaking gasket joints with new flange bolting. Where welded joints fail, submit proposed method of repair for approval by the Owner's representative and authorities having jurisdiction.
3. For each system tested, provide a certificate testifying that the system was satisfactorily tested and passed, using owner furnished forms.

3.14 FLUSHING, DISINFECTING, AND TESTING DOMESTIC WATER

A. Flush, disinfect and test domestic water piping as follows:

1. Prior to disinfection, flush all domestic water piping as described under Flushing and Cleaning of Piping.
2. Purge and disinfect domestic water piping per plumbing code and City of Ann Arbor requirements. Do not use excessive amounts of disinfectant as it may damage piping seals.
3. Submit water samples in sterile bottles to the City of Ann Arbor. Repeat the procedure if the biological examination made by the City of Ann Arbor shows evidence of contamination.

B. Prepare reports for all purging and disinfecting activities. Furnish owner final copy of test results for acceptance.

3.15 DYE TESTING - STORM AND SANITARY WASTE

DYE TESTING IS TYPICALLY REQUIRED ON ALL UNDERGROUND STORM AND SANITARY CONNECTIONS, NEW CONNECTIONS TO CONCEALED STORM AND SANITARY PIPING, AND ON ALL PROJECTS CONTAINING MORE THAN 10 NEW PLUMBING FIXTURES. DYE TESTING LINK UPDATED IN 2 PLACES BELOW ON 10/1/13 PER REQUEST OF JODY SCHAUB OF U-M EHS ON SAME DATE.

A. Conduct Dye Testing on storm and sanitary piping connections as specified herein and in compliance with U-M EHS "Dye Testing Guidelines for Storm Water and Sanitary Systems" (Refer to http://www.ehs.umich.edu/environment/dye.shtml).

1. Dye testing is not required if all of the following apply:
   a. Minor renovation with fewer than 10 total fixtures.
   b. All piping can be clearly, visually traced back to clearly labeled existing piping.
   c. No new underground connections.

B. Preconstruction Phase: Prior to beginning demolition and construction activities:

1. Identify point of connection for all storm and sanitary connections. Provide pipe labels on existing piping if required for clear identification.
2. Identify dye test validation points in conjunction with U-M EHS (in general, first manhole outside the building).
3. Develop dye testing plan in conjunction with U-M EHS and U-M Project Manager or assignee.

C. Demolition and Construction Phase:

1. Furnish dye and conduct dye testing of all new connections to new and existing storm and sanitary piping prior to making connection. Coordinate testing with U-M Project Manager, U-M EHS and U-M Code Inspector. No dye testing shall be performed without explicit consent of code inspector. (Refer to http://www.ehs.umich.edu/environment/dye.shtml for dye requirements.)
2. Correct any cross-connect conditions revealed by the testing and retest to validate corrections.

D. Post-Construction:

1. Conduct additional dye testing at plumbing fixtures when instructed by U-M EHS (where new illicit connection is suspected).

3.16 MECHANICAL SYSTEM FLUID HANDLING

A. Glycol Handling:

1. Disposal of glycol (propylene or ethylene) into Sanitary Waste or Storm Water systems is strictly forbidden by City of Ann Arbor regulations, U-M EHS Department, and State of Michigan requirements.
2. Where indicated, remove and properly dispose of glycol mixture from hydronics systems. Drained mixture and associated flush water (flushing must be done until the water leaving the system has allowably low levels of glycol per U-M EHS - 4 system flushes minimum) is considered Liquid Industrial Waste unless otherwise notified by U-M EHS. Mixture shall be removed and disposed of by U-M EHS approved sub-contractors only. Contact U-M EHS HazMat at (734) 763-4568 for current approved sub-contractors

END OF SECTION 221113

UNIVERSITY OF MICHIGAN
ARCHITECTURE, ENGINEERING AND CONSTRUCTION

ARCHITECTURE & ENGINEERING
326 East Hoover, Mail Stop B
Ann Arbor, MI 48109-1002
Phone: 734-764-3414
Fax: 734-936-3334

BuildingName
The Description of the Project
P00000000 0000

SPECIFICATION DIVISION 22

NUMBER SECTION DESCRIPTION

DIVISION 22 PLUMBING
SECTION 221119 - DOMESTIC WATER PIPING SPECIALTIES

END OF CONTENTS TABLE

DIVISION 22 PLUMBING
SECTION 221119 - DOMESTIC WATER PIPING SPECIALTIES

REVISIONS:
8-1-99: CONTENT APPROVED AS NEW MASTER
8-11-99: REVISED TO VBS.DOT TEMPLATE

7-19-12: ADDED (2.1) THAT SEALS ARE TO BE IMMUNE FROM CHLORAMINES AND THAT EPDM SEALS ARE TO BE PEROXIDE CURED. D. KARLE FOR PLMG MTT.

2014-01-06: IMPROVED LEAD FREE REQUIRMENTS TO REFLECT U.S SAFE DRINKING WATER ACT REQUIREMENTS THAT WENT INTO EFFECT JAN. 4, 2014. D.KARLE FOR MTT.

2015-06-30 REVISED CITY WATER METER ARTICLE TO INDICATE PURCHASED BY OWNER, INSTALLED BY CONTRACTOR, AND TO INDICATE LOCATIONS, ALL TO MATCH STANDARD DETAILS AND DG. D.KARLE FOR PLMG MTT.

PART 1 - GENERAL

1.1 RELATED DOCUMENTS

INCLUDE PARAGRAPH 1.1.A AND B IN EVERY SPECIFICATION SECTION. EDIT RELATED SECTIONS 1.1.B TO MAKE IT PROJECT SPECIFIC.

A. Drawings and general provisions of the Contract, Standard General and Supplementary General Conditions, Division 1 Specification Sections, and other applicable Specification Sections including the Related Sections listed below, apply to this Section.

1.2 SCOPE OF WORK:

A. Provide piping, fittings, and specialties up to point 5 feet beyond the building for the following systems:

1. Domestic Cold Water System
2. Domestic Hot Water System

1.3 QUALITY ASSURANCE

A. Manufacturers and Products: The products and manufacturers specified in this Section establish the standard of quality for the Work. Subject to compliance with all requirements, provide specified products from the manufacturers named in Part 2.

B. Reference Standards: Products in this section shall be built, tested, and installed in compliance with the specified quality assurance standards; latest editions, unless noted otherwise.

1. National Sanitation Foundation NSF/ANSI-61 (potable drinking water) and NSF-61 Annex G (listed as ≤ 0.25% weighted average lead content) (and/or NSF/ANSI-372) and Annex F.
2. U.S Safe Drinking Water Act.

PART 2 - PRODUCTS

2.1 GENERAL

A. All wetted seals shall be made from materials that are immune from chloramine degradation. EPDM seals shall be peroxide cured.

2.2 PIPING SPECIALTIES

A. Water Hammer Arresters: Certified per PDI Standard WH-201. Bellows type, with stainless steel casing and bellows, pressure rated for 250 psi. Piston type, precharged to 60 psig, suitable for installation in any position.
Manufacturers: (Bellows) Zurn Shoktrol or by J.R. Smith, Wade; (Piston) Sioux Chief

SPEC EDITOR: WALL FAUCETS ARE INEXPENSIVE ALTERNATIVE TO WALL HYDRANTS. CHROME PLATE AND T-KEY HANDLE ARE OPTIONS.

B. Wall Faucet - Freezeless: Bronze body, extended stem to suit wall construction, renewable composition disc, wheel handle, 3/4 inch MPT inlet, hose outlet with integral vacuum breaker.
Manufacturers: Woodford 15, J. R. Smith, Chicago, Zurn

C. Wall Faucet - for indoor use: Bronze body, renewable composition disc, wheel handle, 3/4 inch FPT inlet, hose outlet with integral vacuum breaker.
Manufacturers: Woodford 24, J. R. Smith, Chicago, Zurn

SPEC EDITOR: SELECT FROM 2 OPTIONS BELOW.

D. Recessed Nonfreeze Wall Hydrants: Brass box with chrome-plated face, hinged locking cover, brass body and casing, T-Key handle, vacuum breaker, 3/4-inch FPT inlet, hose outlet, inlet stem to suit wall construction.
Manufacturers: Woodford B65, J. R. Smith, Chicago, Zurn

E. Exposed Nonfreeze Wall Hydrants: Chrome plated brass body, T-Key handle, vacuum breaker, 3/4-inch inlet, and hose outlet, inlet stem to suit wall construction.
Manufacturers: Woodford 65, J. R. Smith, Chicago, Zurn

F. Vacuum Breakers: Hose connection vacuum breakers shall conform to ASSE Standard 1011, with finish to match hose connection.
Manufacturers: Chicago, Watts, Kewannee

SPEC EDITOR: ITEMS G THROUGH K ARE USED FOR PROTECTING DOMESTIC WATER SYSTEMS FROM CONTAMINATION. SELECT APPLICABLE ITEMS CAREFULLY, AND COORDINATE WITH DETAILS. GENERALLY, SIZE OR CAPACITY SHOULD BE ADDED TO DRAWINGS, INCLUDING FLOW AND ALLOWABLE PRESSURE DROP.

SPEC EDITOR: ITEM G BELOW IS USED FOR LARGE HIGH HAZARD CONNECTIONS, INCLUDING BUILDING MAIN, FIRE PROTECTION BRANCH, BOILER FEED. DRAIN IS REQUIRED.

G. Backflow Preventer - Reduced Pressure Zone: Includes dual check valves, reduced pressure relief valve and air vent, shutoff valves on inlet and outlet, strainer on inlet, test ports with test cocks, manufacturer's standard materials. ASSE Standard 1013 certified.

Manufacturer: Watts 909 Series, Conbraco, Febco

SPEC EDITOR: ITEM H BELOW IS USED FOR LARGE LOW HAZARD CONNECTIONS, INCLUDING COOLING TOWER MAKE-UP WHERE OUTLET IS ABOVE TOWER OVERFLOW. NO DRAIN IS REQUIRED.

H. Backflow Preventer - Double Check Valve Assembly: Includes double check valves, shutoff valves on inlet and outlet, strainer on inlet, test ports with test cocks, manufacturer's standard materials. ASSE Standard 1015 certified.
Manufacturer: Watts 709 Series, Conbraco, Febco.

SPEC EDITOR: ITEM I BELOW IS USED FOR SMALL LOW HAZARD CONNECTIONS, INCLUDING ICE MACHINE AND WATER COOLERS. NO DRAIN IS REQUIRED.

I. Backflow Preventer - Dual Check Valve: Includes two removable check valve assemblies, manufacturer's standard materials. ASSE Standard 1024 certified.
Manufacturer: Watts 7 Series, Conbraco, Febco.

SPEC EDITOR: ITEM J BELOW IS USED FOR SMALL HIGH HAZARD CONNECTIONS NOT SUBJECT TO CONTINUOUS PRESSURE, INCLUDING INDIVIDUAL FUME HOODS. MUST BE LOCATED OUTSIDE OF FUME HOOD, DOWNSTREAM OF SHUT-OFF VALVE. NO DRAIN IS REQUIRED. FOR NEW FUME HOODS, THIS PARAGRAPH IS NOT REQUIRED, IT SHOULD BE INCLUDED IN HOOD SPECIFICATION

J. Atmospheric Vacuum Breaker - Single float and disc with large atmospheric port. Angle pattern brass body, with chrome plated finish, ½" inlet and outlet unless otherwise noted. ASSE Standard 1001 certified.
Manufacturer: Watts 288A Series, Chicago Water Saver Model L-102.

SPEC EDITOR: ITEM K BELOW IS USED FOR SMALL HIGH HAZARD CONNECTIONS SUBJECT TO CONTINUOUS PRESSURE, INCLUDING GANGED FUME HOODS. MUST BE LOCATED OUTSIDE OF FUME HOOD. NO DRAIN IS REQUIRED.

K. Pressure Type Vacuum Breaker - Spring loaded single float and disc with independent first check valve, manufacturer's standard materials, with test cocks and ball type isolation valves. ASSE Standard 1020 certified. Manufacturer: Watts 800 Series, Conbraco, Febco.

SPEC EDITOR: ITEM L BELOW IS USED FOR AUTOMATIC FILL FOR HW HEATING AND CHILLED WATER SYSTEMS. EDIT BELOW FOR OTHER APPLICATIONS. INDICATE FLOW RATES AND INLET AND OUTLET PRESSURES ON THE DRAWINGS.

L. Pressure-Regulating Valves: Single-seated, direct-operated type, having bronze body with integral strainer and complying with requirements of ASSE Standard 1003. Select proper size for maximum flow rate and inlet and outlet pressures indicated.
Manufacturer: B&G Model 350, Conbraco, Watts.

SPEC EDITOR: ITEM M BELOW IS USED FOR DOMESTIC WATER HEATERS. IT IS USUALLY SPECIFIED WITH WATER HEATER OR OTHER EQUIPMENT. COORDINATE.

M. Combined Pressure-Temperature Relief Valves: Bronze body, test lever, thermostat, ANSI Z21.22. Factory set at 210 degrees F, and 150 psig. Size valves in accordance with ASME Boiler and Pressure Vessel Codes. Manufacturers: Watt series 40, 140, 240, 340, Spirax-Sarco, Leslie

2.3 WATER METER

SPEC EDITOR: APPROACH SPECIFIED BELOW IS THE USUAL METHOD. SIZE SHOULD BE COORDINATED BY DESIGNER, AND INDICATED ON DRAWINGS. USE DETAIL "WATMETR"

A. General: City water meters (domestic water at building entrance, cooling tower make-up and blow down, and irrigation meters) and associated remote read-out devices shall be obtained from the City of Ann Arbor (paid for by the owner) and installed by the contractor. Coordinate piping rough in and installation with the City of Ann Arbor.

PART 3 - EXECUTION

3.1 INSTALLATION OF PIPING SPECIALTIES

SPEC EDITOR: VERIFY LOCAL AUTHORITY REQUIREMENTS.

A. Install backflow preventers and vacuum breakers where shown on drawings, in compliance with the plumbing code and authority having jurisdiction. Install air gap fitting and pipe relief (where applicable) to sanitary waste. Test backflow prevention for proper operation. Tests shall be by Certified Tester. Provide Owner with one (1) copy of each backflow prevention test report.

B. Install water hammer arrestors complete with accessible isolation valve on hot and cold water supply piping to lavatories and sinks.

SPEC EDITOR: DISINFECTING IS TYPICALLY REQUIRED FOR LARGE DOMESTIC WATER SYSTEMS ONLY. DISINFECTING IS ALSO REQUIRED FOR ANY PIPING UPSTREAM OF THE BACKFLOW PREVENTER THAT PROTECTS THE CITY WATER SYSTEM. FLUSHING AND SAMPLING IS TYPICALLY ALL THAT IS DONE ON SMALL PROJECTS. SELECT FROM THE TWO APPROACHES SPECIFIED BELOW.

SPEC EDITOR: SELECT 3.2 BELOW FOR LARGE PROJECTS:

3.2 FLUSHING, DISINFECTING AND TESTING

A. Flush, disinfect and test domestic water piping as follows:

1. Flush all domestic water piping per Related Section 221113.
2. Purge and disinfect domestic water piping per City of Ann Arbor requirements.
3. Submit water samples in sterile bottles to the City of Ann Arbor. Repeat the procedure if the biological examination made by the City of Ann Arbor shows evidence of contamination.

B. Prepare reports for all purging and disinfecting activities. Furnish owner final copy of test results for acceptance.

SPEC EDITOR: SELECT 3.3 BELOW FOR SMALL PROJECTS:

3.3 FLUSHING AND TESTING

A. Flush and test domestic water piping as follows:

1. Flush all domestic water piping per Related Section 221113.
2. Submit water samples in sterile bottles to the City of Ann Arbor. Repeat the procedure if the biological examination made by the City of Ann Arbor shows evidence of contamination.

B. Furnish owner final copy of test results for acceptance.

END OF SECTION 221119

UNIVERSITY OF MICHIGAN
ARCHITECTURE, ENGINEERING AND CONSTRUCTION

ARCHITECTURE & ENGINEERING
326 East Hoover, Mail Stop B
Ann Arbor, MI 48109-1002
Phone: 734-764-3414
Fax: 734-936-3334

BuildingName
The Description of the Project
P00000000 0000

SPECIFICATION DIVISION 22

NUMBER SECTION DESCRIPTION

DIVISION 22 PLUMBING
SECTION 221123 - DOMESTIC-WATER PACKAGED BOOSTER PUMPS

END OF CONTENTS TABLE

SPECIFICATION SECTION ISSUED 7-16-12.

ADDED SECTION 2.7.B, INDICATING THAT ONE VFD PER PUMP IS TO BE PROVIDED. D. KARLE FOR MTT, NOV. 6, 2012.

2014-01-06: IMPROVED LEAD FREE REQUIRMENTS TO REFLECT U.S SAFE DRINKING WATER ACT REQUIREMENTS THAT WENT INTO EFFECT JAN. 4, 2014. D.KARLE FOR MTT.

DIVISION 22 PLUMBING
SECTION 221123 - DOMESTIC-WATER PACKAGED BOOSTER PUMPS

PART 1 - GENERAL

1.1 RELATED DOCUMENTS

INCLUDE PARAGRAPH 1.1.A AND B IN EVERY SPECIFICATION SECTION. EDIT RELATED SECTIONS 1.1.B TO MAKE IT PROJECT SPECIFIC.

A. Drawings and general provisions of the Contract, Standard General and Supplementary General Conditions, Division 1 Specification Sections, and other applicable Specification Sections including the Related Sections listed below, apply to this Section.

SPEC EDITOR: IN ARTICLE BELOW, SELECT PROPER SPEC SECTION NUMBER BY PROJECT. DELETE SUSTAINABLE DESIGN / LEED IF NOT APPLICABLE TO PROJECT.

B. Related Sections:

1. Section 018113 - Sustainable Design Requirements
2. Section 019110/019100 - Commissioning
3. Section 221113- Piping Materials and Methods
4. Section 220523 - Valves
5. Section 220519 - Thermometers, Pressure Gauges, and Accessories
6. Section 220513 - Motors
7. Section 232123 - Pumps
8. Section 220548 – Vibration Control
9. Section 220719 – Mechanical Systems Insulation
10. Section 220514 - Variable Frequency Drives
11. Section 230900 – Mechanical Systems Controls
12. Division 26 – Electrical

1.2 SUMMARY

A. Packaged, skid mounted, domestic water booster pump system including pumps, starters or variable frequency drives (VFDs), controls, piping, valves, hydro-pneumatic tanks, and accessories.

1.3 SUBMITTALS

A. Product Data: Include catalog illustrations, model, rated capacities, performance, weights, dimensions, component sizes, rough-in requirements, piping and wiring diagrams and details, materials of construction, accessories, operating and maintenance clearance requirements. Wiring diagrams shall be project specific, and differentiate between factory wiring and field wiring. Include shop drawings and fabrication drawings for equipment indicating piping connections, power and utility requirements, rigging, installation and support details and instructions. Include written sequence of operations for all controls. Additionally include:

1. Overall dimensional drawing and weight of the pump package
2. Pump submittal including individual pump curves and composite curve for booster package

3. Starter submittal (non-VFD equipped packages)
4. For packages equipped with VFDs:
   a. VFD submittal
   b. Pressure sensor data including installation instructions and calibration procedures
5. Valve, pipe, pressure gauge, and motor submittals
6. Installation, operation, and maintenance manuals
7. Factory test reports
8. Hydro-Pneumatic Tanks:
   a. Tank volume and tank acceptance volume
   b. Bladder replacement instructions

1.4 QUALITY ASSURANCE

A. Manufacturers and Products: The products and manufacturers specified in this Section establish the standard of quality for the Work. Subject to compliance with all requirements, provide specified products from the manufacturers named in Part 2.

B. Reference Standards: Products in this section shall be built, tested, and installed in compliance with the specified quality assurance standards; latest editions, unless noted otherwise.

1. American Water Works Association
2. ANSI/HI 9.6.1-1998, NPSH Margin
3. ANSI/HI 9.6.3-1997 Operating Region
4. NEC-National Electrical Code
5. National Electrical Manufacturers Association
6. National Sanitation Foundation NSF/ANSI-61 (potable drinking water) and NSF-61 Annex G (listed as ≤ 0.25% weighted average lead content) (and/or NSF/ANSI-372) and Annex F.
7. U.S Safe Drinking Water Act.
8. Underwriters Laboratories Inc. listed as a manufacturer of packaged pumping systems under UL/CUL Category QCZJ.
9. Underwriters Laboratories Inc. listed as a manufacturer of control panels under UL/CUL 508a.

C. The pumping package shall be assembled by the acceptable manufacturers listed in Part 2. Manufacturers shall assume "Unit Responsibility" for the complete pumping package. Unit responsibility shall be defined as responsibility for interface and successful operation of all system components supplied by the pumping system manufacturer.

1.5 DELIVERY, STORAGE, AND HANDLING

A. Ship the pump package with entire skid in weather-proof wrap for storage outdoors. Protect control panels, pipe openings, and other sensitive components with heavy plastic or other durable means to ensure cleanliness and prevent damage during shipping and storage. Maintain protection during installation. Comply with protection requirements for variable frequency drives (VFD) described in Related Section.

1.6 WARRANTY

A. Provide a complete warranty for parts and labor for a minimum of one year from the date of Substantial Completion.

PART 2 - PRODUCTS

SPEC EDITOR: SCHEDULE THE PUMP SKID PERFORMANCE DATA ON THE DRAWINGS, INCLUDING QUANTITY OF PUMPS, VFD.S, AND REMOTE PRESSURE SENSORS. CONSIDER CONSTANT VOLUME STAGED PUMP CONTROL WHEN FRICTION LOSSES ARE LOW RELATIVE TO FIXED HEAD (STATIC HEAD AND RESIDUAL PRESSURE) REQUIREMENTS.

2.1 ACCEPTABLE MANUFACTURERS

A. Acceptable Manufacturers:

1. Armstrong
2. Bell & Gossett
3. Canariis
4. Grundfos
5. Paco

2.2 GENERAL

A. Provide, as indicated and scheduled on the drawings, a UL labeled domestic water booster pump packaged system consisting of pumps, motors, controls, suction and discharged piping, hydro-pneumatic tanks, and all required accessories, mounted on a unitized structural steel support frame ("skid"). Hydro-pneumatic tank(s) shall be provided mounted on the skid when indicated on the drawings.

B. Skid frame shall consist of welded A-36 structural steel support members designed to support all equipment, and rigid enough to withstand transportation to site, rigging, installation, and operation. Skid frame shall be suitable for floor mounting, and painted with two coat system consisting of oxide primer and alkyd enamel finish, minimum 3 mils dry film thickness. Provide holes in the base for the installation of anchor bolts and leveling of skid. Bolts to mount equipment components shall be stainless steel or zinc plated and shall meet ASTM Grade A193 B7.

C. Pumps, valves and all wetted components shall be manufactured in compliance with NSF/ANSI-61 and NSF-61 Annex G.

D. All elastomeric seals utilized in the skid including pump seals shall be immune from chloramine degradation.

E. All components provided on the skid shall comply with Related Sections.

F. Packaged system shall be rated for 300 PSIG working pressure at 250°F, or the system's maximum operating pressure and temperature at point where installed, whichever is greater, with a 3 to 1 pressure safety factor.

G. Piping shall be in compliance with Related Section, either type L copper or (minimum) Schedule 10 type 304 stainless steel. Dissimilar metal piping shall not be used, ancillary piping including that associated with sensors shall be the same material as the suction and discharge manifolds. Provide welded or brazed flange connections at pumps, butterfly valves, and at suction and discharge connections (both ends of each manifold) to skid piping. Piping shall be sized to provide a maximum fluid velocity of 10 ft./sec. at the scheduled design flow rate. Header piping shall be easily removable to facilitate moving package through doorways.

H. Provide isolation valves in compliance with Related Section. Valves 2-1/2" and larger shall be butterfly valves. Valves less than 2-1/2" shall be full-port ball valves. Provide isolation valves on the suction and discharge of each pump, and for each pressure gauge.

I. Provide pressure gauges per related section, located on the suction and discharge of each pump.

J. Provide a self-contained high temperature relief valve on the discharge of each pump, located between the pump and the downstream pump isolation valve. Factory set as required for project conditions.

K. Provide a low point drain consisting of a ball valve and hose thread connection, in the suction and discharge header.

SPEC EDITOR: FOR VFD CONTROLLED PUMPS WHEN THE VFD IS EQUIPPED WITH A BYPASS, SPECIFY THE APPROPRIATE RELIEF VALVE PRESSURE SETTING IN THE PARAGRAPH BELOW. DRIVE BYPASSES ARE TYPICALLY NOT RECOMMENDED ON DOMESTIC BOOSTER PUMP APPLICATIONS.

L. For VFD controlled pumps when the VFD is equipped with a bypass: Provide a pressure relief valve between the pump discharge and the pump downstream isolation valve, factory set at 125 PSIG.

M. All control and power wiring shall be factory prewired on the skid. All exposed wiring shall be installed to minimize potential damage, and all power wiring, 110V and higher, shall be in a NEC compliant conduit system.

N. Starters and variable frequency drives shall be mounted on the skid and configured to provide electrical clearances in compliance with the NEC. Examine installation area of skid and also adjust mounting locations in consideration of structures adjacent to the skid to provide NEC electrical clearances.

2.3 PUMPS

A. Provide pumps of capacity and performance scheduled.

SPEC EDITOR: SELECT CLOSED COUPLE PUMP SPEC OR MULTISTAGE PUMP SPEC, BELOW, OR EDIT TO SPECIFY THE PUMP TYPE REQUIRED FOR YOUR PROJECT.

B. Provide close coupled end suction pumps per Related Section with the following additional features:

1. Lead free per NSF/ANSI-61 and NSF-61 Annex G.

2. Casing Construction: Bronze or stainless steel.
3. Impeller Construction: Bronze or stainless steel.
4. Replaceable casing wear rings.
5. Stainless steel shaft with replaceable bronze or stainless steel shaft sleeve completely covering the wetted area of the shaft under the seal.
6. Seals: Mechanical seals consisting of carbon rotating ring, stainless steel spring, ceramic seat, and flexible bellows and gasket.
7. Pump motors shall be secured to mounting frame, not supported by the volute alone.
8. Back pull-out design allowing servicing of pump internals without disturbing piping.

C. Provide multistage vertical mounted pumps.

1. Lead free per NSF/ANSI-61 and NSF-61 Annex G.
2. Casing Construction: Bronze or stainless steel.
3. Impeller Construction: Bronze or stainless steel.
4. Stainless steel shaft with replaceable bronze or stainless steel shaft sleeve completely covering the wetted area of the shaft under the seal.
5. Mechanical seal shall be silicon carbide/carbon with Viton or peroxide cured EPDM elastomers.
6. Pump motor coupler design shall allow seal replacement without having to remove motor.

SPEC EDITOR: TO REDUCE SPEC SIZE IT IS RECOMMENDED THAT THE CHECK VALVE TYPE (BELOW) NOT APPLICABLE TO THE PROJECT BE DELETED.

2.4 PUMP CHECK VALVES

A. For constant volume pump packages provide in-line combination pressure reducing/regulating/check valve as manufactured by Cla-Val Company.

1. Pilot operated, adjustable, spring-loaded, normally open diaphragm type valve.
2. Valve shall be sized for a maximum pressure drop of 10 PSIG at the scheduled flow rate for its respective pump.
3. Designed to permit flow when controlled pressure is less than the spring setting.
4. Suitable for working pressures up to 150 psig at 180°F.
5. Certified for potable water service and lead free, per NSF/ANSI-61 and NSF-61 Annex G. (Use of a fusion bonded epoxy barrier coating is permitted to provide conformance to NSF ANSI-61/NSF-61 Annex G.)
6. Flanged in accordance with ANSI B16.1, Class 125.
7. Valve body equal to nominal pipe diameter at all points through the valve(full port design).
8. Valve body and cover shall be constructed of ASTM A536 ductile iron.
9. Hydrostatically tested and seat tested to demonstrate zero leakage.
10. Locate check valves between the pump discharge and the pump downstream isolation valve.

B. For variable speed pump packages provide non-slam resiliently hinged type check valves, "SWING-FLEX" as manufactured by Val Matic Valve and Manufacturing Corporation.

1. Suitable for working pressures up to 150 psig at 180°F.
2. Full body type, with one moving part, the resiliently hinged disc.
3. Bolted dome shaped access cover allowing replacement of resiliently hinged disk without removing valve from line.
4. Certified for potable water service and lead free, per NSF/ANSI-61 and NSF-61 Annex G.
5. Exterior and interior of the valve coated with an NSF/ANSI 61 approved fusion bonded epoxy coating.
6. American Water Works Association Standard ANSI/AWWA C508 compliant.
7. Flanged in accordance with ANSI B16.1, Class 125.
8. Valve body equal to nominal pipe diameter at all points through the valve. The 4 in. valve shall be capable of passing a minimum 3 in. sphere.
9. Hinged disk: One-piece construction, molded with integral o-ring type sealing surface, with alloy steel and nylon reinforcement in the flexible hinge area. Provide disc material compatible with domestic water service, unaffected by chloramines. Flex portion of disc shall be warranted for twenty-five years. The valve disc design shall have been cycle tested 1,000,000 times in accordance with ANSI/AWWA C508 and show no signs of wear, cracking, or distortion to the valve disc or seat and shall remain drip tight at all pressures.
10. Disk seating surface on a 45 degree angle to minimize disc travel. 35 degree maximum disc stroke and memory disc return action to provide a cracking pressure of 0.25 psig.
11. Valve body and cover shall be constructed of ASTM A536 ductile iron.
12. Hydrostatically tested and seat tested to demonstrate zero leakage.
13. Locate check valves between the pump discharge and the pump downstream isolation valve.

SPEC EDITOR: HYDRO-PNEUMATIC TANKS ARE RECOMMENDED FOR BOTH CONSTANT AND VARIABLE SPEED APPLICATIONS TO ALLOW NO-FLOW PUMP SHUT DOWN AND TO IMPROVE PRESSURE CONTROL. THE SPECIFICATION BELOW IS FOR LARGER STYLE TANKS WITH TANK VOLUMES OF APROX.50 GALLONS AND LARGER. SMALLER TANKS ARE TYPICALLY NOT AVAILABLE WITH THE REPLACEABLE BLADDER SPECIFIED BELOW. DESIGNER MUST PROVIDE TANK DIMENSIONS, VOLUME, ACCEPTANCE VOLUME, PRESSURE/TEMPERATURE RATING, AND PRECHARGE PRESSURE (PROJECT SPECIFIC, FIELD SET) ON THE DRAWINGS. FOR VERY LARGE TANKS IT IS RECOMMENDED THAT THE DESIGNER SPECIFY A "FULL ACCEPTANCE VOLUME" TANK (WHERE ACCEPTANCE VOLUME EQUALS TANK VOLUME), WHICH AVOIDS BLADDER DAMAGE IF THE AIR CHARGE IS LOST. IF TANK IS TO BE MOUNTED ON THE PUMP SKID, INDICATE SUCH ON THE DRAWING.

2.5 HYDRO PNEUMATIC TANKS

A. Acceptable Manufacturers:

1. Amtrol
2. Armstrong
3. Wessels

B. ASME rated, precharged, vertical style bladder tank with bottom system (water) connection.

1. NSF/ANSI-61 and NSF-61 Annex G listed for drinking water use.
2. Replaceable (non-EPDM) butyl bladder, minimum 0.10 inch thick.
3. Large flanged bladder service openings to allow bladder to be replaced without tipping tank on its side.
4. Steel shell with red oxide exterior primer. FDA approved liner of polypropylene or epoxy.
5. Rated for system pressure and temperature, but not less than 125 PSIG at 200F.
6. Provide the following additional features: Tire valve style charging connection to permit on-site charging. Bronze or malleable iron water connection. Auxiliary gauge/pressure switch connection. Lift ring(s). Steel floor support skirt.

SPEC EDITOR: SELECT EITHER CONSTANT VOLUME OR VARIABLE VOLUME PUMP CONTROL BY DELETING ONE OF THE TWO BELOW ARTICLES.

2.6 STARTER AND CONTROLS - CONSTANT VOLUME PUMP PACKAGES

A. Provide UL listed and labeled controller/starter assembly specifically designed for constant speed domestic water pumping applications.

B. Pump staging shall be user-selectable based on kilowatts (kW), current (amps), or pressure (PSI).

1. kW shall be true power derived from a transducer. Amps shall be RMS obtained from the kW transducer. kW and amps shall be controller calibrated with calibration held in non-volatile memory. PSI shall be derived from a pressure transducer with a 4-20 mA analog output.

C. The controller shall operate the pump(s) to provide the following sequence of operation:

1. Pump(s) shall be staged based on DESIGNER SELECT ONE: kilowatts/current/pressure.
2. In the "AUTO" mode, the lead pump shall start upon initiation of the system either by activation of the "START" button or by digital input from the Owner’s Building Automation System (BAS).
3. The lead pump shall operate at the point on its curve where system demand is satisfied. If the lead pump is unable to satisfy demand, lag pumps shall be sequentially started as required to meet system demand.
4. As demand decreases, the lag pumps shall be de-staged to minimize energy consumption.
5. The system shall continue to operate, subject to the controller safety features and alarms, or a low/zero flow condition.

a. The controller shall detect low/zero flow conditions. When the (user adjustable) low/zero flow condition limit is reached, the controller shall shut off the pump(s) and allow system demand to be provided by the hydro-pneumatic tank. The controller shall automatically restart the pumps as hydro pneumatic tank storage is depleted (user adjustable), to maintain the required system pressure/flow.

6. In the event of a failure due to motor overload, the next pump in sequence shall be started.
7. In the event of any safety/alarm condition, controller shall activate a common alarm contact hardwired back to the Owner's BAS system.
8. The controller shall equalize pump run-times.
9. In "MANUAL" mode, it shall be possible to manually turn individual pumps on and off. When a pump is started manually, controller safety and alarm features shall continue to operate including pump cut-out.

D. The controller shall provide the following safety features and alarms:

1. Low suction pressure alarm and cut out(automatic reset)
2. High suction pressure alarm and cut out(automatic reset) (suction pressure is sufficient to satisfy building demand)
3. Low system pressure alarm
4. High system pressure alarm and cut out (manual reset)
5. Pump failure alarm
6. High temperature alarm and cut out (automatic reset)
7. Motor overload failure alarm (manual reset)

E. The control enclosure shall conform to NEMA 1 and shall include motor starters, overloads, control power transformer and a digital microprocessor based controller with a NEMA 4 rated operator interface. Provide a single point electrical power connection that provides power to all controls.

F. Controller shall be capable of operation in ambient conditions of 32˚F to 140˚F and a humidity range of 5% to 95%, non-condensing.

G. The controller will include the following features:

1. Liquid crystal display user interface.
2. Pump status indication.
3. Alarms shall be displayed in plain English on the display.
4. Fault information accessed by interrogating the controller through its HELP and log keys.
5. Minimum one level of software password security provided for protection of field modifiable data.
6. Data logging to provide historical information of key events with date and time stamps. Log information shall include alarms, pump run timers, system on-off times and pump cycle counters. The data log shall display the minimum, maximum and average values of temperature, pressure and flow. It shall also display kilowatt-hours.
7. Capable of operating in automatic, manual or off-line diagnostic modes.
8. A common alarm contact for hardwiring back to Owner's BAS system, which will activate when any alarm condition occurs.

H. The controller shall be microcomputer based and hold its software in non-volatile memory. On-line field modified data entries, such as stage point, or method of staging, shall be stored in flash memory with capability to prevent accidental loss of data due to power loss, voltage surge or spike. In the event of a complete power outage, all field and factory settings shall remain stored and shall automatically be restored when power is restored.

I. The controller shall be powered by 115V/1ph/60Hz AC power from a control power transformer provided within the control enclosure. The control panel shall be equipped with a regulated 24VDC power supply to power analog input signals. The controller shall be capable of receiving up to four 4-20 mA analog input signals and RTD signals.

J. All external sensors/transmitters and switches shall be powered by the controller through its integral 24VDC power supply. Over voltage and short circuit protection shall be on-board. All analog circuits shall be protected from up to 575V with a fast-acting fuse and sacrificial input resistors. All digital outputs shall be externally isolated. The incoming power and I/O circuitry shall reject electromagnetic (EMI) and radio frequency interference.

2.7 VARIABLE FREQUENCY DRIVE (VFD) AND CONTROLS- VARIABLE VOLUME PUMP PACKAGES

A. Provide UL listed and labeled variable speed drive(s) and controller assembly specifically designed for variable speed domestic water pumping applications. The controller shall provide multi-pump parallel operation control, duty-standby pump selection, automatic alternation and automatic transfer to the standby pump upon pump/VFD failure.

B. Unless noted otherwise, provide a separate variable frequency drive for each pump.

C. The controller shall operate the pump(s) to provide the following sequence of operation:

1. When the controller mode is in REMOTE, the pumping system shall start and operate automatically upon the closure of Owner’s BAS contact.
2. When the controller mode is in LOCAL, the pumping system shall start immediately and operate automatically.
3. It shall be possible to manually turn individual pumps on and off. When a pump is started manually, controller safety and alarm features shall continue to operate including pump cut-out.

SPEC EDITOR: INDICATE QUALITY AND LOCATION OF REMOTE PRESSURE SENSORS ON THE DRAWINGS. PRESSURE SENSORS LOCATED AT THE PUMP SKID DEFEAT THE PRIMARY ADVANTAGE OF VFD PUMPING SYSTEMS AND ARE NOT RECOMMENDED.

4. The controller shall control pump speed based on remote mounted pressure transmitter(s), quantity as indicated on drawings.

5. The pump logic controller shall compare each remote pressure transmitter signal ("process variable")to the user adjustable set point. It shall be possible to set an individual setpoint for each process variable location.
6. When the process variable set points at all locations are satisfied the pump speed shall remain constant at the optimum energy consumption level.
7. The controller shall continuously scan and compare each process variable to its individual set point and control to the least satisfied zone.
8. If the set point cannot be satisfied by the designated lead pump, the controller shall initiate a timed sequence of events to stage on a lag pump.
9. The lag pump shall accelerate resulting in the lead pump(s) decelerating until they equalize in speed.
10. Further changes in process variable shall cause the pumps to change speed together.
11. As the worst case zone deviates from set point, the controller shall send the appropriate analog signal to the VFD to speed up or slow down the pump(s).
12. When the set point can be safely satisfied with fewer pumps, the controller shall initiate a timed pump de-stage sequence and continue variable speed operation.
13. The controller shall provide end-of-pump-curve point protection.
14. In the event of any safety/alarm condition, controller shall activate a common alarm contact hardwired back to the Owner's BAS system.
15. The system shall continue to operate, subject to the controller safety features and alarms, or a low/zero flow condition.
    a. The controller shall detect low/zero flow conditions. When the (user adjustable) low/zero flow condition limit is reached, the controller shall shut off the pump(s) and allow system demand to be provided by the hydro pneumatic tank. The controller shall automatically restart the pumps as hydro pneumatic tank storage is depleted (user adjustable), to maintain the required system pressure/flow.
16. In the event of a VFD fault, the controller shall automatically initiate a timed sequence of events to start the redundant pump/VFD set in the variable speed mode.
17. In the event of the failure of a sensor/transmitter, its process variable signal shall be removed from the controllers scan/compare program and a plain English alarm message shall be displayed.
18. In the event of failure to receive a pressure variable signal, a user selectable number of the VFDs shall maintain a user adjustable speed; reset shall be automatic upon correction of the sensor failure.
19. The controller shall equalize pump run-times.

D. The controller shall provide the following safety features and alarms:

1. Low suction pressure alarm and cut out(automatic reset)
2. High suction pressure alarm and cut out(automatic reset). (suction pressure is sufficient to satisfy building demand

3. Low system pressure alarm
4. High system pressure alarm and cut out (manual reset)
5. Pump failure alarm
6. High temperature alarm and cut out (automatic reset)
7. Motor overload failure alarm (manual reset)

E. The control enclosure shall conform to NEMA 1 and shall include a control power transformer and a digital microprocessor based controller with a NEMA 4 rated operator interface. Provide a single point electrical power connection that provides power to all controls.

F. Controller shall be capable of operation in ambient conditions of 32˚F to 140˚F and a humidity range of 5% to 95%, non-condensing.

G. The controller will include the following additional features:

1. Liquid crystal display user interface.
2. Pump status indication.
3. Alarms shall be displayed in plain English on the display.
4. Fault information accessed by interrogating the controller through its HELP and log keys.
5. Minimum one level of software password security provided for protection of field modifiable data.
6. Hydraulic stabilization program with proportional-integral-derivative control, providing smooth pump start-up, speed control, and pump stage and de-stage; and shall prevent damaging hydraulic conditions including motor overload, pump flow surges, and hunting. PID values shall be field adjustable.
7. Display readout shall display the following values at minimum:
   a. Pressures at each remote pressure sensor (PSIG)
   b. Skid discharge pressure (PSIG)
   c. Skid total flow (GPM)
8. Data logging to provide historical information of key events with date and time stamps. Log information shall include alarms, pump run timers, system on-off times and pump cycle counters. The data log shall display the minimum, maximum and average values of temperature, pressure and flow. It shall also display kilowatt-hours.
9. Capable of operating in automatic, manual or off-line diagnostic modes.
10. A common alarm contact for hardwiring back to Owner’s BAS system, which will activate when any alarm condition occurs.
11. Shall meet Part 15 of FCC regulations pertaining to class A computing devices.
12. Upon VFD fault(s), the pump controller shall display an alarm condition through a plain English message.
    a. VFD fault indication shall be continuously displayed on the operator interface of the controller until the fault has been corrected and the controller has been manually reset.

13. Analog input resolution from flow meters and pressure sensors shall be 12-bit minimum, and the controller shall scan each analog input a minimum of once every 100 milliseconds. All sensor/transmitter inputs shall be individually wired to the pump logic controller for continuous scan and comparison function. All analog inputs shall be provided with current limit circuitry to provide short circuit protection and safeguard against incorrect wiring of sensors
14. The controller shall be microcomputer based and hold its software in non-volatile memory. On-line field modified data entries, such as stage point, or method of staging, shall be stored in flash memory with capability to prevent accidental loss of data due to power loss, voltage surge or spike. In the event of a complete power outage, all field and factory settings shall remain stored and shall automatically be restored when power is restored.
15. The controller shall be powered by 115V/1ph/60Hz AC power from a control power transformer provided within the control enclosure. The control panel shall be equipped with a regulated 24VDC power supply to power analog input signals. The controller shall be capable of receiving up to four 4-20 mA analog input signals and RTD signals.
16. All external sensors/transmitters and switches shall be powered by the controller through its integral 24VDC power supply. Over voltage and short circuit protection shall be on-board. All analog circuits shall be protected from up to 575V with a fast-acting fuse and sacrificial input resistors. All digital outputs shall be externally isolated. The incoming power and I/O circuitry shall reject electromagnetic (EMI) and radio frequency interference (RFI)

H. Variable Speed Drive

1. Provide variable speed drives per Related Section. The following features described in the Related Section are not required, except as necessary to meet other parts of this specification.
   a. VFD manual across-the-line electrical bypass.
   b. Local-Remote speed control switch
   c. A run permissive circuit, separate from the safety interlock circuit, which prevents motor operation whether in drive or bypass mode. This circuit, via the customer's external contact device, signals the motor may run, provided the safety interlock contact(s) is made.
   d. “Powered run mode” and “powered run request” circuits.
   e. PID controller integral to VFD.
   f. Auxiliary contacts that actuate when the motor is started in any mode.
   g. Indicating lamp for "POWER AVAILABLE" and for "MOTOR ON BYPASS".

I. Pressure Transmitters

1. Two wire 24 VDC system providing 4-20mA output signal to pump controller. Waterproof NEMA 4 electrical enclosure with a 0.5" NPT conduit connection. 316 stainless steel wetted parts. Adjustable span. Maximum inaccuracy 0.5% of full span including linearity, hysteresis and repeatability errors. Range 0-50 PSIG. Provide higher range transmitters when required by system design or configuration. Capable of withstanding over pressurization of no less than 300 PSIG. Immune from radio frequency interference.

SPEC EDITOR: THE ARTICLE HEADING BELOW (IN HIDDEN TEXT) IS RESERVED FOR SPECIFYING A FLOW METER IF DESIRED. A FLOW METER IS NOT REQUIRED FOR PUMP CONTROL BUT COULD ASSIST IN TROUBLE SHOOTING. FOR VERY LARGE BOOSTER PUMP INSTALLATIONS A MAGNETIC FLOW METER SHOULD BE CONSIDERED DUE TO DURABILITY, ACCURACY, AND HIGH TURN-DOWN. A MAGNETIC FLOW METER CAN EASILY BE SPECIFIED BY REVISING THIS SECTION TO REFERENCE THE MAGNETIC FLOW METER SPECIFICATION FOUND IN SECTION 230900 – MECHANICAL SYSTEMS CONTROLS.

J. Flow Meter

2.8 FACTORY TESTING

A. Prior to shipment, hydrostatically and electrically test each unit, including all safeties and control functions. Test system with motors connected to starters or VFD output. Operate skid from 0 to 100% of design flow requirement and validate proper pump staging and speed control. Calibrate and test all safety features. Test all inputs, outputs and program execution specific to this application.

B. The Owner’s Representative shall be allowed to witness the factory testing. A report detailing the results of the factory test shall be provided. An officer of the manufacturer’s company shall certify by signature that the report accurately reflects the test results, and that the package meets all performance requirements. The report shall clearly identify any performance requirements that were not achieved.

PART 3 - EXECUTION

SPEC EDITOR: WHEN REMOTE SENSORS ARE USED, COORDINATE DOCUMENTS TO PROVIDE SENSOR LOCATION AND CONDUIT/WIRING FROM SENSOR TO PUMP CONTROLLER. DESIGNER MUST SHOW SENSOR LOCATIONS ON PLANS.

3.1 EXAMINATION AND PREPARATION

A. Rig units off delivery trucks. Comply with Manufacturer's rigging instructions.

B. Store units protected from weather, dirt, water, construction debris, and physical damage. Support stored units at points as required by manufacturer.

C. Examine roughing-in for equipment support, anchor-bolt sizes and locations, piping, and electrical connections to verify actual locations, sizes, and other conditions affecting equipment performance, maintenance, and operations. Assure that required NEC electrical clearances will be available at skid mounted components such as VFDs, starters, control panels, and similar electrical equipment. Existing and new piping cannot run over skid control panels or skid VFDs. Proceed with installation only after unsatisfactory conditions have been corrected.

3.2 INSTALLATION

A. Install in strict compliance with manufacturer's installation instructions and Related Sections. Maintain manufacturer's recommended clearances for service and maintenance.

B. Install skid and hydro-pneumatic tanks on support structures or concrete bases as indicated. Install skid vibration isolation when indicated or required by Related Section. Set skid base level, using stainless steel shims and metal blocks designed for leveling machinery bases. Anchor base to floor using all mounting holes.

C. Install separate devices furnished by skid manufacturer and not factory installed, including but not limited to pressure transmitters and flow meters. Install such devices in compliance with Related Sections.

D. Connect suction and discharge headers to building piping using flexible piping connectors per Related Section, whether indicated or not. Cap unused ends of skid manifolds.

E. Install flow meters and pressure transmitters when included or required. Final termination of devices (both ends) shall be accomplished by the factory service technician.

1. Install flow meters per flow meter manufacturer's recommendations and with the recommended up and downstream straight lengths of pipe. Install piping as required to provide these straight lengths. When manufacturer does not indicate the required up and downstream requirements, provide a minimum of 5 pipe diameters upstream and downstream of straight pipe. Provide wiring in conduit between the flow meter and the skid controller.
2. Install pressure transmitters at locations specified on the drawings.
    a. Install pressure transmitters in locations easily accessible for calibration and replacement.
    b. Install ball type isolation valve to isolate the pressure transmitter.
    c. Provide a pressure gauge at the same location as each pressure transmitter, to validate pressure transmitter reading.
    d. Provide wiring in conduit between the pressure transmitter and the skid controller.
3. Install wiring in conformance with Related Section (Mechanical Systems Controls), utilizing approved contractors listed in that section.

F. Install hydro pneumatic tanks as indicated on the drawings.

1. Install to maintain manufactures specified clearance above tanks, minimum 18 inches.
2. Connect to system piping. Provide separate isolation valve and drain valve with hose bib for each hydro-pneumatic tank.
3. Install pressure gauge (or switch when indicated) on hydro-pneumatic tank auxiliary air connection.
4. Isolate each tank from the system, drain the tank, then charge to specified precharge pressure. If precharge pressure is not indicated, obtain from project engineer. Factory precharge is not to be considered the correct precharge pressure. Commissioner shall witness the setting of precharge pressure.

G. Complete all manufacturer's pre-start checks.

H. Prior to placing system into operation, sanitize skid piping, hydro-pneumatic tanks, and any building piping not previously sanitized. Assure sanitizing solution enters each hydro-pneumatic tank. Provide temporary piping and bypasses as required to accomplish sanitization.

I. Insulate skid piping and hydro-pneumatic tanks; materials and installation per Related Section.

3.3 TEMPORARY SERVICE

A. Start units for temporary use only with the express written permission of the Project Manager and in compliance with all requirements of the Contract Documents.

B. Prior to placement into temporary service perform manufacturer's pre-start protocols.

C. Utilize factory trained service technician to perform start-up as described under the Field Quality Control article. Commission prior to putting into temporary service to the extent required by the Commissioning Authority. Re-perform factory service technician start-up and all commissioning activities prior to Owner acceptance, even if previously completed to ready for temporary service.

D. Perform all required routine maintenance procedures during temporary service. Continuously maintain a log of such procedures. Store log at unit during temporary use period and include log as part of the final O & M manual.

3.4 FIELD QUALITY CONTROL

A. Provide a factory trained service technician to perform start-up services. The service technician shall perform the following:

1. Verify correct installation and organize, instruct and assist the mechanical contractor's personnel in start-up procedures
2. Terminate all control wiring connections associated with the skid.
3. Perform manufacturer's pre-start checks.
4. Set all safety devices.
5. Start skid controller and VFDs. Set all controller and VFD parameters. Tune the controller.

6. Commission the pump package, including demonstrating all safeties, proper pump staging, de-staging, and speed control, zero-flow shutdown, restart after power failure, and all other skid features.
    a. Optimize the setpoint of each pressure transmitter control variable to the minimum pressure (with reasonable safety factor) required for the plumbing fixtures actually installed. Obtain preliminary setpoints in advance from project engineer. Adjust setpoints under the direction of the Commissioning Authority.
    b. On constant volume pump packages, adjust pump pressure regulating valves to provide adequate pressure at the most remote plumbing fixture (with reasonable safety factor). Set controller to specified staging method (kW/amps/pressure); reset to another staging method and adjust controller parameters as required to provide proper performance.
7. Provide a written service report prepared on site and submitted at the time of each service visit (with copies immediately provided to the Owner and Commissioner). Report shall indicate services provided and list all controller settings, PID settings, and set points.
8. Train Owner personnel. Training and start up services are separate functions and training shall not be combined with startup services.

3.5 COMMISSIONING

A. Perform commissioning activities per Related Sections.

3.6 TRAINING

A. Provide a qualified service technician from the Manufacturer's staff to provide training.

B. Train Owner's maintenance personnel on equipment operation, start-up and shutdown, trouble-shooting, servicing and preventative maintenance procedures. Review the data contained in the Operating and Maintenance Manuals with Owner's personnel.

    1. Provide 2 hours training minimum.

END OF SECTION 221123

FACILITIES & OPERATIONS
ARCHITECTURE, ENGINEERING AND CONSTRUCTION
UNIVERSITY OF MICHIGAN

BuildingName
The Description of the Project
P00000000 0000

SPECIFICATION DIVISION 22

NUMBER SECTION DESCRIPTION

DIVISION 22 PLUMBING

SECTION 221313 - FACILITY SANITARY SEWERS

END OF CONTENTS TABLE

DIVISION 22 PLUMBING

SECTION 221313 - FACILITY SANITARY SEWERS

PART 1 - GENERAL

1.1 RELATED DOCUMENTS

A. Drawings and general provisions of the Contract, including General and Supplementary Conditions and Division 01 Specification Sections, apply to this Section.

1.2 SUMMARY

A. Section Includes:

1. Pipe and fittings.
2. Cleanouts.
3. Manholes.

B. This section includes the furnishing and installation of a sanitary sewer system.

1.3 DEFINITIONS

A. FRP: Fiberglass-reinforced plastic.

B. PVC: Polyvinyl chloride

C. ACI: American Concrete Institute

D. ASTM: American Society for Testing and Materials

E. AWWA: American Water Works Association

F. AASHTO: American Association of State and Highway Transportation Officials

G. SDR: Standard Dimension Ratio

1.4 ACTION SUBMITTALS

A. Product Data: For each type of product indicated.

B. Shop Drawings: For manholes and castings. Include plans, elevations, sections, details, and frames and covers.

C. Manufacturer Certification: All pipe furnished shall be accompanied by the manufacturer's certificate of test showing conformity with the Specifications. Each certificate shall identify a specific lot number, quantity of pipe, and show actual test results for the lot furnished. These certificates shall be submitted to the Inspector at the time of unloading.

D. Cut sheets for Contractor layout and staking locations.

E. Mandrel details and certification.

1.5 INFORMATIONAL SUBMITTALS

A. Field quality-control reports regarding elevation of pipe.

B. Testing reports, passed tests upon completion of testing.

1.6 DELIVERY, STORAGE, AND HANDLING

A. Do not store plastic manholes, pipe, and fittings in direct sunlight.

B. Protect pipe, pipe fittings, and seals from dirt and damage.

C. Handle manholes according to manufacturer's written rigging instructions.

1.7 PROJECT CONDITIONS

A. Interruption of Existing Sanitary Sewerage Service: Do not interrupt service to facilities occupied by Owner or others unless permitted under the following conditions and then only after arranging to provide temporary service according to requirements indicated:

1. Notify Owner no fewer than five working days in advance of proposed interruption of service. Coordination of a building system shutdown requires a minimum of 10 working days.

2. Do not proceed with interruption of service without Owner’s written permission.

B. Product Inspection: All materials furnished shall be subject to inspection on arrival at the job site by the Owner. The purpose of the inspection shall be to cull and reject products that, independent of physical tests specified under the standard specifications designated herein, fail to conform to the requirements of these specifications. Materials shall be subject to rejection on account of any of the following:

1. Variation in any dimension exceeding the permissible variations given in the material specifications. Pipe in all cases shall be full diameter.

2. Fractures or cracks passing through the barrel or socket.

3. Chips or fractures on the interior of the pipe exceeding two inches in length, one inch in width, or depth more than ¼ of the thickness of the wall.

4. Blisters that are either broken, exceed three inches in diameter, or project more than 1/8 inches above the surrounding surface of the pipe.

5. Variation of more than 1/16 inch per lineal foot in alignment of pipe intended to be straight.

C. Rejected materials shall be clearly marked by the Inspector and immediately removed from the site of work by the Contractor, without cost to the Owner.

PART 2 - PRODUCTS

2.1 PVC PIPE AND FITTINGS

A. PVC Gravity Sewer Piping:

1. Pipe: ASTM D 3034-83, SDR 26 wall thickness, PVC gravity sewer pipe with integral bell-and-spigot ends and with integral ASTM D 3212-81, elastomeric seals for gasketed joints.

   a. Lubricant used shall be supplied by the pipe manufacturer and the joints shall be coupled in accordance with manufacturer's requirements.

   b. The following information shall be clearly marked on each length of pipe:

      1) Manufacturer's name or trademark.
      2) Nominal pipe size.
      3) The PVC cell classification.
      4) The legend.
      5) The designation "Specification D 3034".

2. Fittings: ASTM D 3034-83, SDR 26 wall thickness, PVC gravity sewer pipe with integral bell-and-spigot ends and with integral ASTM D 3212-81, elastomeric seals for gasketed joints.

   a. Lubricant used shall be supplied by the pipe manufacturer and the joints shall be coupled in accordance with manufacturer's requirements.

   b. The following information shall be clearly marked on each fitting

      1) Manufacturer's name or trademark.
      2) Nominal size.
      3) The material designation "PVC".
      4) "PSM".
      5) The designation "Specification D 3034".

B. PVC Gravity Sewer Service Leads, Risers and Fittings:

1. Pipe: ASTM D 3034, SDR 26 PVC pipe with bell-and-spigot ends for gasketed joints.
   a. Lubricant used shall be supplied by the pipe manufacturer and the joints shall be coupled in accordance with manufacturer's requirements.
   b. The following information shall be clearly marked on each length of pipe:
      1) The pipe designation and class.
      2) The name or trademark of the manufacturer.
      3) Identification of the manufacturing plant.
      4) Testing lot number.

2. Fittings: ASTM D 3034-83, SDR 35 PVC pipe with bell ends.

   a. Lubricant used shall be supplied by the pipe manufacturer and the joints shall be coupled in accordance with manufacturer's requirements.

3. Gaskets: ASTM D 3212, elastomeric seals.

4. Adapters: For use when connecting pipe with pipe of other material or manufacturer. The nominal I.D. of adaptors shall be manufactured for that specific purpose and shall be the same size as the nominal diameter of pipe connected thereto.

   a. Adaptor shall be "CB" gasketed sewer saddle by Romac Industries, Inc. or Engineer approved equal.

2.2 CLEANOUTS

A. PVC Cleanouts:

1. Pipe: ASTM D 3034-83, SDR 26 wall thickness, PVC gravity sewer pipe with bell-and-spigot ends and with integral ASTM D 3212-81, elastomeric seals for gasketed joints.

   a. Lubricant used shall be supplied by the pipe manufacturer and the joints shall be coupled in accordance with manufacturer's requirements.

   b. The following information shall be clearly marked on each length of pipe:
      1) Manufacturer's name or trademark.
      2) Nominal pipe size.
      3) The PVC cell classification.
      4) The legend.
      5) The designation "Specification D 3034".

2. Casting: Neenah R-7506-D, EJCO 1574 or Engineer approved equal.

   a. Casting shall be stamped with "Sanitary"

3. Fittings: ASTM D 3034-83, SDR 26 wall thickness, PVC gravity sewer pipe with bell-and-spigot ends and with integral ASTM D 3212-81, elastomeric seals for gasketed joints.

   a. Lubricant used shall be supplied by the pipe manufacturer and the joints shall be coupled in accordance with manufacturer's requirements.

   b. The following information shall be clearly marked on each fitting
      1) Manufacturer's name or trademark.
      2) Nominal size.
      3) The material designation "PVC".
      4) "PSM".

5) The designation "Specification D 3034".

2.3 MANHOLES

A. Standard Precast Concrete Manholes:

1. Description: ASTM C 478, precast, reinforced concrete, of depth indicated, with provision for sealant joints.
2. Diameter: 48 inches minimum unless otherwise indicated.
3. Ballast: Increase thickness of precast concrete sections or add concrete to base section, as required to prevent flotation.
4. Base Section: 8-inch minimum thickness for floor slab and 4-inch minimum thickness for walls and base riser section; with separate base slab or base section with integral floor.
5. Riser Sections: 4-inch minimum thickness, of length to provide depth indicated.
6. Top Section: Eccentric-cone type unless concentric-cone or flat-slab-top type as indicated; with top of cone of size that matches grade rings.
7. Joint Gaskets: ASTM C 443, rubber O-ring gasket. Joints pointed with mortar after installation, both inside and outside of the manhole.
8. Resilient Pipe Connectors: ASTM C 923, cast or fitted into manhole walls, for each pipe connection. Neoprene rubber shall meet ASTM C 443 and have a minimum thickness of 3/8 inch. Pipe clamps shall be of corrosion-resistant steel. Pipe connectors shall be one of the following:
   a. Flexible neoprene rubber boot securely clamped into a core-drilled pipe port. Pipe ports shall be core-drilled at the point of manhole manufacture and shall be accurately located within ½ inch of proposed sewer centerline.
   b. Self-adjusting mechanical pipe to manhole seal providing resilient flexible and infiltration-proof joint.
   c. Flexible rubber wedge firmly secured against a rubber gasket cast into the manhole.
   d. Engineer approved equal.
9. Steps: ASTM C 478 injection molded copolymer, polypropylene, encapsulating a ½ inch grade 60 steel reinforcing bar with an impact resistance of 300 ft-lbs and a pull out force resistance of 1500 lbs; Cast or anchor steps into sidewalls at 15-inch intervals. Step depth shall a minimum of 6 inches.
10. Grade Rings: 2-inch Reinforced-concrete rings, 2-inch minimum and 6-inch maximum height, with diameter matching manhole frame and cover. Install all MH's with grade rings to accommodate future adjustment in elevation.
11. Flow Channel: Construct flow channel the full diameter of the incoming and outgoing pipe with class A concrete.
12. Aggregate Base: Structure shall be placed on a minimum of 4 inches of 21AA limestone bedding.
13. Ground water monitor: In areas where ground water is known to exist and sewer is to be air tested, the Contractor shall install a ½ inch diameter, 10-inch-long pipe nipple through the manhole wall above one of the sewer lines entering the manhole. The pipe nipple shall be capped for use in air testing.

B. Manhole Frames and Covers:

1. Description: East Jordan Company, 1040-WT heavy duty or Engineer approved equal. Include indented top design with lettering cast into cover, using wording equivalent to "SANITARY SEWER."
2. Material: ASTM A 48, Class No. 30, gray iron unless otherwise indicated.

2.4 CONCRETE

A. General: Cast-in-place concrete complying with ACI 318 and the following:

1. Cement: ASTM C 150, Type II.
2. Fine Aggregate: ASTM C 33, sand.
3. Coarse Aggregate: ASTM C 33, crushed gravel.
4. Water: Potable.

B. Portland Cement Design Mix: The following are the grades of concrete recognized for use with sanitary sewers:

1. Class A concrete.
   a. 564 lbs cement (6 sacks) per cubic yard of concrete.
   b. Minimum 28-day compressive strength of 3,500 psi, conforming to MDOT Sec 7.01, Grade 35P.
   c. Air content shall be between 5-7%
   d. Water-cement ratio may not exceed 0.45 for air entrained concrete and 0.50 for non-air entrained concrete.
2. Class X concrete.
   a. 282 lbs cement (3 sacks) per cubic yard of concrete.
   b. Minimum 28-day compressive strength of 1,000 psi.

C. Cement mortar shall consist of one-part Type II Portland cement, two parts fine aggregate, and sufficient water to produce a workable mix.

D. Steel Reinforcement

1. Reinforcing Fabric: ASTM A 185/A 185M, steel, welded wire fabric, plain.

2. Reinforcing Bars: ASTM A 615/A 615M, Grade 60 (420 MPa) deformed steel.

E. Manhole Channels and Benches: Factory or field formed from concrete. Portland cement design mix, 4000 psi minimum, with 0.45 maximum water/cementitious materials ratio. Include channels and benches in manholes.

1. Channels: Concrete invert, formed to same width as connected piping, with height of vertical sides to three-fourths of pipe diameter. Form curved channels with smooth, uniform radius and slope.

   a. Invert Slope: 1 percent minimum through manhole.

2. Benches: Concrete, sloped to drain into channel.

   a. Slope: 8 percent.

PART 3 - EXECUTION

3.1 EARTHWORK

A. Excavating, trenching, and backfilling are specified in Section 312000 "Earth Moving."

3.2 PIPING INSTALLATION

A. General Locations and Arrangements: Drawing plans and details indicate general location and arrangement of underground sanitary sewer piping. Location and arrangement of piping layout take into account design considerations. Install piping as indicated, to extent practical. Where specific installation is not indicated, follow piping manufacturer's written instructions.

B. Install piping beginning at low point, true to grades and alignment indicated with unbroken continuity of invert. Place bell ends of piping facing upstream. Install gaskets, seals, sleeves, and couplings according to manufacturer's written instructions for using lubricants, cements, and other installation requirements.

C. Install manholes for changes in direction unless fittings are indicated. Use fittings for branch connections unless direct tap into existing sewer is indicated.

D. Install proper size increasers, reducers, and couplings where different sizes or materials of pipes and fittings are connected. Reducing size of piping in direction of flow is prohibited.

E. Install gravity-flow, non-pressure, drainage piping according to the following:

1. Install piping pitched down in direction of flow, at the slope indicated on the drawings. Each pipe, as laid, shall be checked by the Contractor. A variation of ¼ inch from plan grade will be deemed sufficient reason to reject the work and require Contractor re-lay the pipe, at no cost to the Owner.
2. Install piping with 5-foot minimum cover or depth as indicated on the drawings.
3. Install ductile-iron, gravity sewer piping according to ASTM A 746.
4. Install PVC sewer piping according to ASTM D 2321 and ASTM F 1668.

F. Install force-main, pressure piping according to the following:

1. Install piping with restrained joints at tee fittings and at horizontal and vertical changes in direction. Use corrosion-resistant rods, pipe or fitting manufacturer's proprietary restraint system, or cast-in-place-concrete supports or anchors.
2. Install piping with 5-foot minimum cover or as indicated on the drawings.
3. Install ductile-iron pressure piping according to AWWA C600 or AWWA M41.

4. Install ductile-iron special fittings according to AWWA C600.

G. Maintain dry trench during sewer and manhole construction by pumping, as necessary.

H. Clear interior of piping and manholes of dirt and superfluous material as work progresses. Maintain swab or drag in piping, and pull past each joint as it is completed. Place plug in end of incomplete piping at end of day and when work stops.

3.3 MANHOLE INSTALLATION

A. General: Install manholes complete with appurtenances and accessories indicated.

B. Install precast concrete manhole sections with sealants according to ASTM C 891.

C. Install FRP manholes according to manufacturer's written instructions.

D. Form continuous concrete channels and benches between inlets and outlet.

E. Set tops of frames and covers flush with finished surface of manholes that occur in pavements. Set tops 3 inches above finished surface elsewhere unless otherwise indicated.

F. Install manhole-cover inserts in frame and immediately below cover.

G. Manholes shall be placed at every change in grade, direction and pipe size as well as at junctions of sewers.

H. All sewer connections, outside of sewer service leads, shall occur at a manhole.

I. Install outside drop manhole connections whenever a sewer enters a manhole at an invert elevation of more than 24 inches above the manhole invert elevation. Outside drop connections shall be sized at least one half the size of the incoming sewer or next larger size, but in no cases not less than 8 inches in diameter.

3.4 CONCRETE PLACEMENT

A. Place cast-in-place concrete according to ACI 318.

3.5 CLEANOUT INSTALLATION

A. Install cleanouts and riser extensions from sewer pipes to cleanouts at grade. Install piping so cleanouts open in direction of flow in sewer pipe.

B. Set cleanout frames and covers in earth 3 inches above surrounding grade. If in pavement, set cleanout frames and covers at pavement elevation.

3.6 CONNECTIONS

A. Make connections to existing piping and underground manholes.

1. All connections, unless specifically noted otherwise, shall occur at a manhole. Use commercially manufactured wye fittings for piping branch connections. Remove section of existing pipe, install wye fitting into existing piping, and encase entire wye fitting plus 6-inch overlap with not less than 6 inches of concrete with 28-day compressive strength of 3000 psi.
2. Make branch connections from side into existing piping. Remove section of existing pipe, install wye fitting into existing piping, and encase entire wye with not less than 6 inches of concrete with 28-day compressive strength of 3000 psi.
3. Make branch connections from side into existing piping, NPS 21 or larger, or to underground manholes by cutting opening into existing unit large enough to allow 3 inches of concrete to be packed around entering connection. Cut end of connection pipe passing through pipe or structure wall to conform to shape of and be flush with inside wall unless otherwise indicated. On outside of pipe or manhole wall, encase entering connection in 6 inches of concrete for minimum length of 12 inches to provide additional support of collar from connection to undisturbed ground.

    a. Use concrete that will attain a minimum 28-day compressive strength of 3000 psi unless otherwise indicated.
    b. Use epoxy-bonding compound as interface between new and existing concrete and piping materials.

4. Protect existing piping and manholes to prevent concrete or debris from entering while making tap connections. Remove debris or other extraneous material that may accumulate.

3.7 CLOSING ABANDONED SANITARY SEWER SYSTEMS

A. Abandoned Piping: Close open ends of abandoned underground piping indicated to remain in place. Include closures strong enough to withstand hydrostatic and earth pressures that may result after ends of abandoned piping have been closed. Use either procedure below:

1. Close open ends of piping with at least 8-inch thick, brick masonry bulkheads.
2. Close open ends of piping with threaded metal caps, plastic plugs, or other acceptable methods suitable for size and type of material being closed. Do not use wood plugs.

B. Abandoned Manholes: Excavate around manhole as required and use either procedure below:

1. Remove manhole and close open ends of remaining piping.
2. Remove top of manhole down to at least 36 inches below final grade. Break the bottom of the manhole. Fill with class II sand up to roadway cross section or 4 inches where outside of pavement influence. Fill the remainder with the typical or required roadway section where in the roadway and with 4 inches of top soil and seed where outside of the pavement influence.

C. Backfill to grade according to Section 312000 "Earth Moving."

3.8 IDENTIFICATION

A. Comply with requirements in Section 31200 "Earth Moving" for underground utility identification devices. Arrange for installation of green warning tapes directly over piping and at outside edges of underground manholes.

1. Use detectable warning tape over ferrous piping.
2. Use detectable warning tape over nonferrous piping and over edges of underground manholes.
3. All sanitary sewer shall be locatable. User tracer wire if

3.9 FIELD QUALITY CONTROL

A. All sanitary sewers, including leads, 36 inches and smaller shall be air tested by the Contractor, documented by the Contractor provided to the Owner, and witnessed by Owner's representative. (Required by U-M) All sanitary sewers greater than 36 inches shall be infiltration or exfiltration tested by the Contractor, documented by the Contractor provided to Owner, and witnessed by authority having jurisdiction. The authority having jurisdiction will decide whether infiltration or exfiltration testing is performed based upon ground water conditions.

All sewers, except 4-inch and 6-inch leads, shall be television inspected by the Contractor. Television inspection shall follow current MDOT procedures. (Required by U-M)

All PVC sanitary sewer main shall be mandrel tested (Required by U-M).

1. Submit separate report for each system inspection.
2. Defects requiring correction include the following:

    a. Alignment: Less than full diameter of inside of pipe is visible between structures.
    b. Deflection: Flexible piping with deflection that prevents passage of ball or cylinder of size not less than 92.5 percent of piping diameter.
    c. Damage: Crushed, broken, cracked, or otherwise damaged piping.
    d. Infiltration: Water leakage into piping.
    e. Exfiltration: Water leakage from or around piping.

3. Replace defective piping using new materials, and repeat inspections until defects are within allowances specified.
4. Reinspect and repeat procedure until results are satisfactory.

B. Mandrel Test: Test sanitary sewerage according to the requirements of the following:

1. Mandrel shall be commercially produced, nine fin mandrel with the following labelled on the mandrel:
    a. Pipe diameter intended for.

b. Percent deflection accounted for.
c. ASTM or AASHTO standard stamp.

2. Mandrel test shall take place a minimum of 30 days after installation of the sewer.
3. Mandrel shall be pulled from manhole to manhole for each section of pipe installed.
   a. Passing freely through each section of pipe shall indicate a satisfactory result.
   b. Failure to freely pass through any section of pipe will require that section be exposed, examined and corrective actions taken, as necessary.
4. The mandrel shall meet the following schedule of sizing:

Pipe I.D.	PVC Mandrel O.D.
8″	7.28″
10″	9.08″
12″	10.79″
15″	13.20″
18″	N/A
24″	N/A

5. Air Tests: Test sanitary sewerage according to requirements of authorities having jurisdiction, UNI-B-6, and the following:

   a. Ground water level shall be determined by removing the cap from the previously installed pipe nipple, blowing air through the pipe into the ground, connecting a clear plastic tube to the pipe. The tube should be vertical and a measurement of the height in feet of water above the pipe centerline shall be taken. The height in feet shall be divided by 2.3I to establish the pressure (in psig) that will be considered to be the average ground water back pressure.

   b. The following is the sequence and time requirements for air testing:

      1) Each end of the pipe shall be plugged with pneumatic plugs capable of holding line pressure. There shall be three hose connections to the pneumatic plug with one being used for inflation, one used for continuously reading the air pressure in the line, and the third used for introducing low pressure air into the sealed line.
      2) Low pressure will be introduced into the sealed line until the internal air pressure reaches 4.0 psig greater than the average back pressure of any ground water pressure that may be above the pipe. At least two minutes shall be allowed for the air pressure to stabilize. After the stabilization period, the pressurization hose shall be disconnected to prevent air from entering or escaping from the line. There shall be a pressure gauge for reading the internal pressure of the line being tested. The gauge shall be capable of showing pressure as low as 0 psig up to no greater than 20 psig. In the 0-10 psig range the gauge shall be both calibrated and accurate to one-tenth of one pound. The 0-10 psig portion of the gauge dial shall cover at least one-half of the complete dial range. This gauge shall

have a tee fitting to allow simultaneous pressure reading by Owner gauge.

3) The time requirement for the pressure to decrease from 3.5 to 2.5 psig (greater than the average back pressure of any ground water that may be over the pipe) shall not be less than the time given in the following table:

Pipe (Inches)	PVC & DIP SEWERS	
	Holding Time (Seconds)	Minimum Holding Time (min:sec)
4	0.380 x L	3:46
6	0.854 x L	5:40
8	1.520 x L	7:34
10	2.374 x L	9:26
12	3.418 x L	11:20
15	5.342 x L	14:10
18	7.692 x L	17:00
21	10.470 x L	19:50
24	13.674 x L	22:40
30	21.366 x L	28:20
36	30.768 x L	34:00

6. Infiltration Test, if required: Contractor shall test infiltration in all sewers larger than 36 inch or as required by the Authority Having Jurisdiction.

   a. Temporary weirs shall be placed, within manholes, at either ends of the sewer being tested. Test shall not exceed 1,200 feet.

      1) Allowable infiltration shall not be more than 200 gallons per inch of pipe diameter per mile of sewer per 24 hours, including manholes.
      2) If allowable limit of infiltration is exceeded on any test section, the Contractor shall reconstruct or repair the defective portion of the sewer and re-test.
      3) Visible leaks shall be repaired regardless the results of the infiltration test.

7. Exfiltration Test, if required: Contractor test either exfiltration or infiltration in all sewers larger than 36 inches or as required by the Authority having jurisdiction.

   a. Standpipe method will be used from manhole to manhole for each length of pipe.
      1) Hydrostatic head of 10 feet to the sewer's average centerline elevation will be required with adjustments for external submergence due to water in the trench.

2) Owner will establish time durations and procedures for each test.
3) Maximum allowable exfiltration rate will be 200 gallons per inch of pipe diameter per mile of sewer per 24 hours including manholes.
4) Contractor shall pump all water out of the downstream manhole to a storm sewer at the completion of the test.

8. Television Inspection: Contractor shall perform a preliminary television inspection prior to acceptance of sewers and prior to any building connection being made.
   a. All sewer lines shall be thoroughly cleaned prior to television inspection.
   b. Inverts of sewer shall be wetted by pouring clean water in the upstream manhole until it appears in the downstream manhole.
   c. The camera shall be connected to a video monitor and recorder.
   d. The camera shall pass from manhole to manhole of each pipe section installed.
   e. Television inspection deemed satisfactory if no visible defects, including but not limited to, dips or low spots, high spots, errors in horizontal or vertical alignment, joint offsets, leaks, cracks, or debris are present.

C. Any defects in the sewer shall constitute repairs be made.

D. Replace leaking piping using new materials, and repeat testing until leakage is within allowances specified.

3.10 CLEANING

A. Clean dirt and superfluous material from interior of piping.

END OF SECTION 221313

UNIVERSITY OF MICHIGAN
ARCHITECTURE, ENGINEERING AND CONSTRUCTION

ARCHITECTURE & ENGINEERING
326 East Hoover, Mail Stop B
Ann Arbor, MI 48109-1002
Phone: 734-764-3414
Fax: 734-936-3334

BuildingName
The Description of the Project
P00000000 0000

SPECIFICATION DIVISION 22

NUMBER SECTION DESCRIPTION

DIVISION 22 PLUMBING
SECTION 221319 - DRAINAGE SPECIALTIES

END OF CONTENTS TABLE

DIVISION 22 PLUMBING
SECTION 221319 - DRAINAGE SPECIALTIES

REVISIONS:
8-1-99: CONTENT APPROVED AS NEW MASTER
8-11-99: REVISED TO VBS.DOT TEMPLATE

EDITOR: FUTURE SECTION WILL ADDRESS PVC CLEANOUTS, ROOF DRAINS AND FLOOR DRAINS.

SPEC TEAM: I SUGGEST WE DELETE THE FOLLOWING FOR SHORT SPEC VERSION:
2.3 TRENCH DRAINS
2.4 ROOF DRAINS
2.5 DRAINAGE SPECIALTIES
3.5 INSTALLATION OF ROOF DRAINS
APPLICABLE PORTIONS OF 1.1 SCOPE OF WORK

PART 1 - GENERAL

1.1 RELATED DOCUMENTS

INCLUDE PARAGRAPH 1.1.A AND B IN EVERY SPECIFICATION SECTION. EDIT RELATED SECTIONS 1.1.B TO MAKE IT PROJECT SPECIFIC.

A. Drawings and general provisions of the Contract, Standard General and Supplementary General Conditions, Division 1 Specification Sections, and other applicable Specification Sections including the Related Sections listed below, apply to this Section.

1.2 SCOPE OF WORK

SPEC EDITOR: REVISE EDIT TO SUIT PROJECT

A. Provide piping, fittings, and specialties up to point 5 feet beyond the building for the following systems:

1. Sanitary Waste and Vent System
2. Storm Waste System

B. This section specifies materials and installation for the following specialties:

1. Clean-outs
2. Floor Drains
3. Trench Drains
4. Roof Drains
5. Drainage Specialties (backwater valves, trap primers, neutralization tanks)

PART 2 - PRODUCTS

2.1 CLEAN-OUTS

SPEC EDITOR: STANDARD APPLICATION IS SPECIFIED BELOW. OTHER OPTIONS INCLUDE SQUARE COVER, RECESSED COVER, TRACTOR COVER, WATER TIGHT COVER, FLANGE AND CLAMP WITH MEMBRANE (FOR WET, ABOVE GRADE LOCATIONS). CONSULT CATALOG FOR SPECIAL APPLICATIONS.

A. Floor Clean-Out: Cast iron body, round, adjustable, scoriated, secured, nickel-bronze top, threaded and slotted bronze closure plug, outlet connection to suit application. For carpeted floors, provide nickel bronze carpet clamping frame and cover. Manufacturer: Smith 4020 to 4031, Wade, Zurn

B. Wall Clean-Out: Treaded bronze plug in cast iron tee or ferrule, with stainless steel cover.

C. Exposed Clean-Out: Threaded plug, of material compatible with system piping.

2.2 FLOOR DRAINS

SPEC EDITOR: THE FLOOR DRAINS LISTED BELOW ARE STANDARD APPLICATION FLOOR DRAINS. ADD ADDITIONAL FLOOR DRAINS FOR SPECIALTY APPLICATIONS (HOSPITALS ETC.). OPTIONS INCLUDE: GRATE MATERIAL, SQUARE OR HINGED GRATES, SIDE OUTLETS, INTEGRAL BACKWATER VALVES, TRAPS, TRAP PRIMERS, 12" DIAMETER GRATES, ANIMAL ROOMS (WITH AUTO FLUSH), COATED BODY.

A. General floor drain requirements: Unless otherwise noted, provide round strainer/ grate, cast iron body, seepage flange and clamping collar, bottom outlet same size as pipe served, with caulked, no-hub or neoprene gasket connection. Load classifications per ASME A112.21.1M. Waterproofing: 40 mils sheet membrane, chlorinated polyethylene, Chloraloy 240.

B. Provide funnel type floor drain cover for floor drains used for cooling coil condensate drains, equipment drains and wherever shown on drawings. See details.

SPEC EDITOR: USE FD-A IN TOILET ROOMS, SHOWERS, SMALL KITCHENS, FINISHED AREAS, SMALL MECHANICAL ROOMS.

C. Type FD-A: Light duty, adjustable, nickel bronze strainer, minimum strainer diameter equal to twice pipe diameter. Manufacturer: Smith 2005-A, Wade, Zurn.

SPEC EDITOR: USE FD-B IN LARGE KITCHENS, AND AREAS WITH HEAVIER LOADS, WHERE FINAL ADJUSTMENT IS IMPORTANT, AND SEDIMENT BUCKET IS NOT REQUIRED.

D. Type FD-B: Medium duty, adjustable 8 1/2" diameter cast iron grate. Manufacturer: Smith 2310, Wade, Zurn.

SPEC EDITOR: USE FD-C OR FD-D IN LARGE MECHANICAL ROOMS, LOADING DOCKS AND AREAS WITH HEAVIER LOADS, WHERE FINAL ADJUSTMENT IS LESS IMPORTANT, AND SEDIMENT BUCKET IS REQUIRED.

E. Type FD-C: Medium duty, 8 1/2" diameter cast iron grate, free standing sediment bucket. Manufacturer: Smith 2110, Wade, Zurn.

F. Type FD-D: Heavy duty, 10" x 12" cast iron grate, free standing sediment bucket. Manufacturer: Smith 2450, Wade, Zurn.

2.3 TRENCH DRAINS

SPEC EDITOR: SEE JAY R. SMITH POLYMER CONCRETE AND FIBERGLASS DRAINAGE SYSTEMS FOR A VIABLE ALTERNATIVE TO CAST IRON. ADDITIONAL RESEARCH AND EDITTING IS REQUIRED TO MAKE TRENCH DRAINS PROJECT SPECIFIC.

A. Trench drain type designations and sizes are indicated on Drawings.

B. Cast Iron Trench Drains: Cast-iron shallow hub body and grate with end plates and gaskets, assembled in standard lengths for total length and width as indicated, with the following features:

1. Sediment bucket.
2. Flashing device.
3. Heel-proof, ADA compliant grate.
4. Vandal-proof grate.
5. Backwater valve.
6. Convex grate.
7. Dome bottom strainer.
8. Bottom outlet, inside caulk.

C. Manufacturers: Smith, Wade, Zurn.

2.4 ROOF DRAINS

SPEC EDITOR: THESE ROOF DRAINS ARE STANDARD FOR MOST INSULATED ROOFS. USE RD-C WHERE PRACTICAL. OTHER CONSIDERATIONS: CAST IN PLACE DRAINS, PROMENADE DRAINS, EXPANSION JOINTS, OVERFLOW DRAINS, IRMA ROOFS. SECONDARY ROOF DRAINAGE IS REQUIRED BY CODE - COORDINATE WITH ARCHITECT.

A. General roof drain requirements: Unless otherwise noted, provide secured round cast iron dome, cast iron body and flashing clamp/ gravel stop, sump receiver, underdeck clamp, bottom outlet same size as pipe served, with caulked, no-hub or neoprene gasket connection.

SPEC EDITOR: RD-A IS FOR SMALL AREAS, 2" - 4" OUTLET

B. Type RD-A: 8" diameter, 40 sq. in. free area, cast iron extension and collar. Manufacturer: Smith 1330, Wade, Zurn.

SPEC EDITOR: RD-B IS FOR MEDIUM AREAS, 2" - 4" OUTLET

C. Type RD-B: 12" diameter, 70 sq. in. free area, cast iron extension and collar. Manufacturer: Smith 1310, Wade, Zurn.

SPEC EDITOR: RD-C IS FOR LARGE AREAS, 2" - 6" OUTLET

D. Type RD-C: 15" diameter, 100 sq. in. free area, cast iron adjustable extension and collar. Manufacturer: Smith 1015, Wade, Zurn.

SPEC EDITOR: RD-D IS FOR VERY LARGE AREAS, 8" TO 10" OUTLET

E. Type RD-D: 20" diameter, 150 sq. in. free area, cast iron extension and collar. Manufacturer: Smith 1010, Wade, Zurn.

2.5 DRAINAGE SPECIALTIES

SPEC EDITOR: EDIT ITEMS BELOW CAREFULLY. OTHER ITEMS TO CONSIDER ADDING: GREASE INTERCEPTORS, AIR ADMITTANCE VALVE (IN LIEU OF VENT - TO BE FURTHER INVESTIGATED WITH INSPECTORS)

A. Backwater Valve (in-line): Bronze fitted cast-iron, bolted cover. Flapper shall provide a maximum 1/4 inch clearance between flapper and seat for air circulation. Manufacturer: Smith 7022, Wade, Zurn.

B. Trap Primers: ASSE 1018, bronze body valve with automatic vacuum breaker, with 1/2 inch connections. Manufacturers: Precision Plumbing Products Model P-1

C. Dilution and Neutralization Tank: Plastic construction, for use with acid laboratory waste, see details. Manufacturers: Orion, Wessels, Town and Country Plastics.

D. Acid Waste Clean-out: For lab waste piping, specified to be polypropylene, provide corrosion resistant fire retardant polypropylene cleanouts, ASTM-D 401, with nickel bronze cover. Manufacturer: Orion, Sioux Chief

E. Acid Waste Floor Drain: For lab waste piping specified to be polypropylene, provide corrosion resistant floor drains manufactured with fire retardant polypropylene, ASTM-D-4101. Grate funnel and covers shall be fiber filled polypropylene. Manufacturer: Orion: Model FD-3, Sioux Chief

PART 3 - EXECUTION

3.1 EXAMINATION AND PREPARATION

A. Verify existing grades, inverts, utilities, obstacles, and topographical conditions prior to installations.

B. Examine rough-in requirements for plumbing fixtures and other equipment having drain connections to verify actual locations of piping connections prior to installation.

C. Examine walls, floors, roof, and plumbing chases for suitable conditions where piping and specialties are to be installed.

3.2 INSTALLATION OF PIPING

A. Refer to Related Section 221113 for additional requirements.

SPEC EDITOR: TAL WILL ORDER A COPY OF THIS MANUAL.

B. Install underground cast iron piping per Cast Iron Soil Pipe Institute Engineering Manual.

3.3 INSTALLATION OF CLEANOUTS

SPEC EDITOR: CLEANOUT LOCATIONS SHOULD BE INDICATED ON DRAWINGS. CLEANOUTS IN ULAM AREA SHALL BE LOCATED IN WALLS. CLEANOUTS LOCATED IN THE FLOOR WILL NOT BE PERMITTED.

A. Provide cleanouts at each change in direction of piping greater than 45 degrees, where indicated on drawings and where required by code. Clean-outs shall be same size as pipe served through 4". Above Ground Cleanouts: Install cleanouts at minimum intervals of 50' for piping 4 inch and smaller and 100' for larger piping, at base of each vertical soil or waste stack.

B. Encase exterior cleanouts in concrete flush with grade.

C. Cleanouts shall be aesthetically located with respect to tile patterns, masonry bond and alignment. Coordinate installation with masonry and concrete work.

D. Prior to acceptance of the system, demonstrate that cleanout plugs are easily removable and can be easily rodded.

E. When cleanouts are required in above grade floors, flash and clamp cleanouts in floors provided with membrane waterproofing as specified for floor drains.

3.4 INSTALLATION OF FLOOR DRAINS

A. Install floor drains as indicated on drawings, at low points of surface areas to be drained.

B. Provide trap for all floor drains, minimum 3" trap and waste.

C. Check drainage of surfaces by flooding with the hose.

D. Provide vent for floor drain piping per code, minimum 1 1/2".

3.5 INSTALLATION OF ROOF DRAINS

SPEC EDITOR: USE DETAIL SHOWING INSTALLATION OF WATERPROOF MEMBRANE

A. Install drain flashing collar or flange so that no leakage occurs between roof drain and adjoining roofing. Maintain integrity of waterproof membranes, where penetrated.

B. Check drainage of surfaces by flooding with hose.

END OF SECTION 221319

UNIVERSITY OF MICHIGAN
ARCHITECTURE, ENGINEERING AND CONSTRUCTION

ARCHITECTURE & ENGINEERING
326 East Hoover, Mail Stop B
Ann Arbor, MI 48109-1002
Phone: 734-764-3414
Fax: 734-936-3334

BuildingName
The Description of the Project
P00000000 0000

SPECIFICATION DIVISION 22

NUMBER SECTION DESCRIPTION

DIVISION 22 PLUMBING
SECTION 221333 - PACKAGED SUBMERSIBLE STORM AND SANITARY PUMPS

END OF CONTENTS TABLE

DIVISION 22 PLUMBING
SECTION 221333 - PACKAGED SUBMERSIBLE STORM AND SANITARY PUMPS

PART 1 - GENERAL

1.1 RELATED DOCUMENTS

INCLUDE PARAGRAPH 1.1.A AND B IN EVERY SPECIFICATION SECTION. EDIT RELATED SECTIONS 1.1.B TO MAKE IT PROJECT SPECIFIC.

A. Drawings and general provisions of the Contract, Standard General and Supplementary General Conditions, Division 01 Specification Sections, and other applicable Specification Sections including the Related Sections listed below, apply to this Section.

B. Related Sections:

1. Section 018113: Sustainable Design Requirements
2. Section 019110/019100: Commissioning
3. Section 220500: Common Work Results for Mechanical
4. Section 220513: Motors
5. Section 220523: Valves
6. Division 26: Electrical

EDIT SUMMARY TO MAKE PROJECT SPECIFIC. THIS SPECIFICATION PERTAINS TO PUMPS SERVING BUILDING DRAINS, I.E. PUMPS LOCATED WITHIN BUILDINGS. IT IS NOT WRITTEN TO APPLY TO PUMPS SERVING BUILDING SEWERS OR OTHER SEWERS. SUCH PUMPS HAVE ADDITIONAL REQUIREMENTS (EXPLOSION PROOF, ETC.) PER NFPA 820.

1.2 SUMMARY

A. Pumps and accessories serving Building Drains. This specification does not apply to pumps and accessories serving sewers of any type. Products specified in this section include the following:

1. Submersible pumps for elevator sumps
2. Submersible storm pumps
3. Submersible sewage pumps
4. Submersible grinder sewage pumps
5. Controls for the specified pumps
6. Sump basins and covers
7. Check valves and accessories for submersible pumps
8. Guide rail support system

1.3 SUBMITTALS.

A. Product Data: Include catalog illustrations, model, rated capacities, performance, weights, dimensions, component sizes, rough-in requirements, piping and wiring diagrams and details, materials of construction, accessories, operating and maintenance clearance requirements. Wiring diagrams shall be project specific, and differentiate between factory wiring and field wiring. Include written sequence of operations for all controls.

B. Provide information for the following:

1. Individual pump curves indicating flow rate, head, horsepower, and pump efficiency.
2. Pump pipe connection size and type.
3. Maximum passable solid size.
4. Shaft seals, bearings, and cord sealing information.
5. Motor insulation data.
6. Pump starter information.
7. Float information.
8. Control panel wiring diagrams.
9. Control panel face diagrams indicating components on the panel face and sides and how the components are labeled.
10. Float rod information.
11. Basin data, including depth, diameter; size, arrangement, and elevations of all openings; and data on gaskets and bushings to seal the cover and cover penetrations gas-tight.
12. Guide rail support system data.

C. Installation, Operation and Maintenance Manuals

1.4 QUALITY ASSURANCE STANDARDS

A. Manufacturers and Products: The products and manufacturers specified in this Section establish the standard of quality for the Work. Subject to compliance with all requirements, provide specified products from the manufacturers named in Part 2.

B. Reference Standards: Products in this section shall be built, tested, and installed in compliance with the specified quality assurance standards; latest editions, unless noted otherwise.

1. American Water Works Association
2. ANSI/HI 9.6.1-1998, NPSH Margin
3. ANSI/HI 9.6.3-1997 Operating Region
4. NEC-National Electrical Code
5. National Electrical Manufacturers Association
6. National Sanitation Foundation
7. Underwriters Laboratories Inc. listed as a manufacturer of packaged pumping systems under UL/CUL Category QCZJ.
8. Underwriters Laboratories Inc. listed as a manufacturer of control panels under UL/CUL 508a.
9. UL Standard 778 Motor Operated Water Pumps.

1.5 DEFINITIONS

A. Building Drains: Refer to the Michigan Plumbing Code.

1.6 DELIVERY, STORAGE, AND HANDLING

A. Ship the pump and accessories in weather-proof wrap for storage outdoors. Protect control panels, pipe openings, and other sensitive components with heavy plastic or other durable means to ensure cleanliness and prevent damage during shipping and storage. Maintain protection during installation.

B. Comply with pump manufacturer's written rigging instructions for handling and installation.

1.7 WARRANTY

A. Provide a complete warranty for parts and labor for a minimum of one year from the date of Substantial Completion.

PART 2 - PRODUCTS

PROVIDE A DETAIL ON THE DRAWINGS INDICATING PIT SIZE AND DEPTH, QUANTITY AND ELEVATIONS OF FLOATS, INVERT ELEVATIONS OF CONNECTIONS TO PIT, ETC.

2.1 ACCEPTABLE MANUFACTURERS

A. Acceptable Manufacturers:

1. Barnes
2. Zoeller
3. Hydromatic
4. Goulds

ELEVATOR SUMP PUMPS MUST DISCHARGE TO SANITARY. SEE THE CONVEYING SYSTEMS DESIGN GUIDELINE FOR DETAILED REQUIREMENTS REGARDING ELEVATOR SUMP PUMPS.

2.2 SUBMERSIBLE CENTRIFUGAL PUMPS FOR ELEVATOR SUMPS

A. Simplex design, minimum capacity of 3000 gallons per hour per hoistway.

B. Pump Type: Completely submersible, end-suction, close-coupled, overhung-impeller, centrifugal pump with controls. Capable of operating un-submerged without damage to pump. Factory-assembled and tested.

C. Impeller: Capable of passing spherical solids 1/2 inch in diameter or greater. Statically and dynamically balanced, cast iron, stainless steel, or engineered plastic, keyed and secured to shaft.

D. Pump Casing: Cast iron, with open inlet, legs that elevate pump to permit flow into impeller, and vertical discharge for piping connection. Powder coated epoxy finish. Stainless steel screws, bolts, and lift handle.

EDIT MOTOR HP BELOW, OR DELETE AND INCLUDE IN PUMP SCHEDULE. MICHIGAN ELEVATOR CODE PROHIBITS PUMPS OVER 300 VOLTS. VOLTAGE RANGES INDICATED BELOW ARE THE TYPICAL DESIRED BUT MAY REQUIRE REVISION DEPENDING ON THE PROJECT. SEE THE CONVEYING SYSTEMS DESIGN GUIDELINE FOR MORE INFORMATION.

E. Motor: Hermetically sealed, oil filled, with waterproof power cable of length required with cord cap (control panel will be wired to control a receptacle in the elevator hoistway that the pump will be plugged into) and a cable-sealing assembly for connection at pump. Class B or better insulation, 1.15 service factor minimum. Non-overloading through the length of the curve.

1. Pumps 1 HP or less: 120 VAC single phase.

2. Pumps greater than 1 HP: 208 VAC three phase.
3. Single Phase Pumps: Provide capacitor-start type motors with built-in overload protection.

F. Pump and Motor Shaft: Stainless steel with factory-sealed, oil or grease-lubricated ball bearings. Upper bearing may be sleeve type.

G. Shaft Seals: Mechanical seals, single or double.

H. Controls:

1. Float Switches: Provide multiple tethered style float switches to turn the pump on and off and to detect high level, with waterproof cables of length required. High level detection shall be provided by use of a separate float switch. Float switches shall be non-mercury mechanical type. Provide stainless steel clamps to secure floats to the pump discharge pipe.
2. Control Panel: Minimum NEMA 1 rated. Hinged, lockable, dead front cover. No electrical switches, indicator lights, or enunciators of any kind shall be located on the outside of the panel/panel cover.
3. Controls: Provide UL listed controller/starter assembly. Provide a magnetic contactor (single phase pumps) or magnetic starter with overload protection (three phase pumps) that starts and stops the pump via float switch(es) separately wired to the control panel. Provide a non-latching dry alarm contact for monitoring by the Owner's building monitoring system. The dry alarm contact shall energize *whenever the pump runs*, and when high sump level is detected by the high level float switch. When high water level is detected by the high level float switch, the pump shall turn on (if not already running) and the dry alarm contact shall energize. Provide panel circuit breaker or fuse, numbered terminal strip(s) for all electrical connections, and a project specific wiring diagram in a plastic pouch inside the panel.

THE ARTICLE BELOW IS FOR STORM PUMP APPLICATIONS.

2.3 SUBMERSIBLE DOUBLE SEAL CENTRIFUGAL STORM WATER PUMPS

A. Pump Type: **Duplex** design, completely submersible, end-suction, close-coupled, overhung-impeller, centrifugal pump with controls. Capable of operating un-submerged without damage to pump. Factory-assembled and tested.

B. Impeller: Vortex style, uncoated, capable of passing spherical solids 3/4 inch in diameter or greater. Statically and dynamically balanced cast or ductile iron, bronze, or stainless steel; keyed and secured to shaft.

C. Pump Casing: Cast iron, with open inlet, legs that elevate pump to permit flow into impeller, and vertical discharge for piping connection. Powder coated epoxy finish. All fasteners exposed to liquid shall be 300 series stainless steel. Provide stainless steel lifting handle. Provide lift ring (of stainless steel) and self-sealing discharge fittings for connection to guide-rail supports, when guide rail supports are indicated.

D. Motor: Hermetically sealed, oil filled, with waterproof power cable of length required. Class B or better insulation, 1.15 service factor minimum. Non-overloading through the length of the curve.

1. Single Phase Pumps: Provide capacitor-start type motors with built-in overload protection.

E. Cable-sealing assembly at pump connection: shall employ compression gland and epoxy potting of individual motor leads to prevent moisture from entering the motor housing if cord is damaged.

F. Pump and Motor Shaft: Stainless steel with factory-sealed, oil or grease-lubricated upper and lower ball bearings.

G. Shaft Seals: Double mechanical seals. Lower and upper seals to be silicon carbide/silicon carbide. Provide seal moisture probes for leak detection.

THE ARTICLE BELOW SHOULD BE USED FOR SEWAGE PUMPS THAT PRIMARILY SERVE LIGHT DUTY SANITARY APPLICATIONS SUCH AS FLOOR DRAINS IN MECHANICAL SPACES OR WHERE A FEW LOW USE WATER CLOSETS DRAIN TO THE PUMP. FOR PUMPS THAT SERVE A SIGNIFICANT NUMBER OF WATER CLOSETS A SEWAGE GRINDER PUMP AS SPECIFIED IN THE NEXT SECTION IS TYPICALLY RECOMMENDED. BE SURE TO INDICATE WHICH TYPE PUMP IS REQUIRED ON THE PROJECT DRAWINGS, PREFERABLY IN A SCHEDULE.

2.4 SUBMERSIBLE DOUBLE SEAL CENTRIFUGAL SEWAGE PUMPS

A. Pump Type: **Duplex** design, completely submersible, end-suction, close-coupled, overhung-impeller, centrifugal pump with controls. Capable of operating un-submerged without damage to pump. Factory-assembled and tested.

B. Impeller: Vortex style, uncoated, capable of passing spherical solids 2 inch in diameter or greater. Statically and dynamically balanced cast or ductile iron, bronze, or stainless steel; keyed and secured to shaft.

C. Pump Casing: Cast iron, with open inlet, legs that elevate pump to permit flow into impeller, and vertical discharge for piping connection. Powder coated epoxy finish. All fasteners exposed to liquid shall be 300 series stainless steel. Provide stainless steel lifting handle. Provide lift ring (of stainless steel) and self-sealing discharge fittings for connection to guide-rail supports, when guide rail supports are indicated.

D. Motor: Hermetically sealed, oil filled, with waterproof power cable of length required. Class B or better insulation, 1.15 service factor minimum. Non-overloading through the length of the curve.

1. Single Phase Pumps: Provide capacitor-start type motors with built-in overload protection.

E. Cable-sealing assembly at pump connection: shall employ compression gland and epoxy potting of individual motor leads to prevent moisture from entering the motor housing if cord is damaged.

F. Pump and Motor Shaft: Stainless steel with factory-sealed, oil or grease-lubricated upper and lower ball bearings.

G. Shaft Seals: Double mechanical seals. Lower and upper seals to be silicon carbide/silicon carbide. Provide seal moisture probes for leak detection.

THE ARTICLE BELOW SHOULD BE USED FOR SEWAGE PUMPS RECEIVING THE DISCHARGE FROM A SIGNIFICANT QUANTITY OF WATER CLOSETS, IN PARTICULAR FOR AREAS WHERE WATER CLOSETS MAY BE SUBJECT TO ABUSE SUCH AS DORMITORYS. FOR PUMPS SUBJECT TO HEAVY USE, CONSIDER SPECIFYING A REVERSE FLOW ASSEMBLY.

2.5 SUBMERSIBLE DOUBLE SEAL CENTRIFUGAL GRINDER SEWAGE PUMPS

A. Pump Type: **Duplex** design, completely submersible, end-suction, close-coupled, overhung-impeller, centrifugal pump with controls. Capable of operating un-submerged without damage to pump. Factory-assembled and tested. 1-1/4 inch minimum discharge opening.

B. Impeller: Vortex style, uncoated, capable of passing solids. Statically and dynamically balanced cast or ductile iron, bronze, stainless steel, or engineered thermoplastic; keyed and secured to shaft. Provide hardened stainless-steel cutter/grinder with shredding device.

C. Pump Casing: Cast iron, with open inlet, legs that elevate pump to permit flow into impeller, and vertical or horizontal discharge (as required for the project) for piping connection. Powder coated epoxy finish. All fasteners exposed to liquid shall be 300 series stainless steel. Provide stainless steel lifting handle. Provide lift ring (of stainless steel) and self-sealing discharge fittings for connection to guide-rail supports, when guide rail supports are indicated.

D. Motor: Hermetically sealed, oil filled, with waterproof power cable of length required. With Class F motor insulation. Non-overloading through the length of the curve.

1. Single Phase Pumps: Provide capacitor-start type motors with built-in overload protection.

E. Cable-sealing assembly at pump connection: shall employ compression gland and epoxy potting of individual motor leads to prevent moisture from entering the motor housing if cord is damaged.

F. Pump and Motor Shaft: Stainless steel with factory-sealed, oil or grease-lubricated upper and lower ball bearings, to provide radial and thrust support.

G. Shaft Seals: Double mechanical seals. Lower and upper seals to be silicon carbide/silicon carbide. Provide seal moisture probes for leak detection.

THE PUMP CONTROL ARTICLE BELOW REFLECTS TYPICAL U-M REQUIREMENTS. MODIFY AS REQUIRED TO MAKE PROJECT SPECIFIC. INCLUDE A MORE DETAILED PUMP SEQUENCE OF OPERATION WITH THE PUMP DETAIL ON THE DRAWINGS OR WITH THE ARTICLE BELOW, IF NECESSARY. INFORMATION BELOW DOES NOT INDICATE QUANTITY OF FLOATS SINCE FLOAT QUANTITIES VARY WITH PUMP CONFIGURATION.

THEREFORE, INDICATE REQUIRED QUANTITY OF FLOATS ON THE PUMP DETAIL OR BELOW.

2.6 PUMP CONTROLS:

A. Unless otherwise noted, provide UL listed controller/starter assembly with the following features for each pump.

1. Float Switches: Provide multiple tethered style non-mercury mechanical style float switches to turn the pump on and off and to detect high level, with waterproof cables of length required. Provide float rod/pipe, tether clamps, and hardware, to secure the floats at the required elevations, all of stainless steel construction.
2. Control Panel: Minimum NEMA 1 rated. Hinged, lockable.
3. Controls: Provide UL listed controller/starter assembly. Provide a magnetic contactor (single phase pumps) or magnetic starter with adjustable overload protection (three phase pumps) that starts and stops the pump via float switch(es) separately wired to the control panel.
   a. Automatic Alternator (duplex pump arrangements): Electrical alternator that starts pumps on successive cycles and starts multiple pumps if one cannot handle load.
   b. High-Water Alarm: Rod-mounted mechanical-float switch.
   c. Panel features (all mounted on panel face): control on/off switch, hand-off-auto switch and pump run light for each pump, high water alarm light, high water alarm test switch, seal failure light.
   d. Provide an audible alarm that activates upon high water or seal failure condition.
   e. Provide a latching dry auxiliary alarm contact for monitoring by the Owner's building monitoring system, that energizes upon either a high water or seal failure condition.
   f. Provide an alarm silence button which deactivates the audible alarm but does not deactivate the local alarm lights or auxiliary alarm contact until the alarm condition clears.
   g. Provide motor disconnect for each motor, control transformer, control panel circuit breaker or fuse, numbered terminal strip(s) for all electrical connections, a project specific wiring diagram in a plastic pouch inside the panel, and all required accessories.
   h. Label all components on the exterior of the control panel with engraved plastic labels screwed to the panel face. Label all wiring, terminal strips, and electrical components inside the panels using labels made for that purpose.

2.7 SUMP BASINS AND BASIN COVERS

PROVIDE A DETAIL ON THE DRAWINGS INDICATING QUANTITY AND ELEVATIONS OF TOP AND SIDE WALL CONNECTIONS AND FLOAT ACTIVATION ELEVATIONS. DUE TO RADON CONCERNS ALL COVERS (I.E. INCLUDING STORM PUMPS) ARE SPECIFIED AS GAS TIGHT, WITH THE EXCEPTION OF THOSE USED FOR ELEVATOR SUMP PUMPS.

A. Basins: Factory-fabricated, watertight, cylindrical, basin sump with top flanges and sidewall openings for pipe connections.

1. Material: Fiberglass.
2. Reinforcement: Mounting plates for pumps, fittings, guide-rail supports if used, and accessories, adequately braced. Provide integral water tight anchor flange(s) that match the guide rail base plate and side support mounting holes, when guide rails are used.

RETAIN SUBPARAGRAPH BELOW IF REQUIRED TO ANCHOR BASIN TO CONCRETE SLAB IN CASE OF GROUND-WATER PROBLEMS.

3. Anchor Flange: Same material as or compatible with basin sump, cast in or attached to sump, in location and of size required to anchor basin in concrete slab.

B. Basin Covers: Gas tight cover with gaskets, seals, and bushings to seal hatches, piping, conduit and cords gas tight. Sealants and caulks shall not be used.

1. Cover Reinforcement: Reinforced to support anticipated loads in the area of use but no less than required for supporting foot traffic.
2. For basins larger than 36" diameter and for any duplex pump arrangement, provide a bolted sub-hatch centered above each pump and pump discharge pipe that allows the pump to be removed through the sub-hatch without disturbing the basin cover, cover vent or drainage connections, sump float rod, or adjacent pumps and their discharge pipes and power cords. Additionally, provide an inspection hatch that can be opened without disturbing any component penetrating the basin cover.

C. Covers for basins in elevator hoistways: Provide removable galvanized steel grating (capable of supporting foot traffic), notched around the pump discharge pipe to allow grate removal without disconnecting the discharge pipe.

2.8 ACCESSORIES

A. Check valves for elevator sump pumps and storm pumps:

1. Silent check valve per Related Section.

SILENT CHECK VALVES ARE NOT RECOMMENDED FOR WASTE WATER SERVICE, THEREFORE A RESILIENTLY HINGED TYPE CHECK VALVE HAS BEEN SPECIFIED FOR THAT SERVICE, BELOW.

B. Check valves for sewage pumps and grinder sewage pumps:

1. Non-slam resiliently hinged type check valve with peroxide cured EPDM disk, disk accelerator, and flanged connections; “SurgeBuster” as manufactured by Val Matic Valve and Manufacturing Corporation.

SPECIFY GUIDE RAIL SUPPORT SYSTEMS WHEN SUMP DEPTH EXCEEDS FOUR FEET. DELETE ARTICLE BELOW WHEN GUIDE RAILS ARE NOT REQUIRED.

2.9 GUIDE-RAIL SUPPORT SYSTEM:

A. Provide a guide rail support system allowing automatic disconnect and removal of pump, furnished by the same manufacturer that supplied the submersible pump.

B. Guide Rails: Vertical pipes or structural members, made of stainless steel, attached to baseplate and basin sidewall or cover.

C. Baseplate: Stainless Steel plate, attached to basin floor, supporting guide rails and stationary elbow.

D. Hardware: all nuts, bolts, fasteners and hardware shall be stainless steel.

E. Pull rods and lifting cable: Stainless steel.

F. Sliding guide rail connector: Stainless steel motor-mounted or casing-mounted yokes or other attachments for aligning pump during connection of flanges and sliding pump up and down rails.

G. Movable Elbow: Cast iron pump discharge-elbow fitting with flange and positioning device.

H. Stationary Elbow: Cast iron fixed discharge-elbow fitting with flange that mates to movable-elbow flange and connects to baseplate.

I. Seal between movable and stationary elbow: Elastomeric seal retained by non-corrosive clamp ring and stainless steel fasteners.

2.10 SOURCE QUALITY CONTROL

A. All pumps shall be factory tested. Verify all control panel functions. Verify pump grounding and integrity of winding insulation by megger testing. Run each pump submerged prior to shipment at maximum running point. Verify flow rate, head, amperage draw, and water tightness.

THE TEST REPORT BELOW IS OPTIONAL, BUT TYPICALLY RECOMMENDED FOR CRITICAL OR LARGE PUMP INSTALLATIONS.

B. A report detailing the results of the factory test shall be provided. An officer of the manufacturer's company shall certify by signature that the report accurately reflects the test results, and that the package meets all performance requirements. The report shall clearly identify any performance requirements that were not achieved.

PART 3 - EXECUTION

3.1 EXAMINATION AND PREPARATION

A. Examine roughing-in for equipment support, piping, and electrical connections to verify actual locations, sizes, and other conditions affecting equipment performance, maintenance, and operations. Proceed with installation only after unsatisfactory conditions have been corrected.

3.2 INSTALLATION

A. Install in strict compliance with manufacturer's installation instructions and Related Sections. Maintain manufacturer's recommended clearances for service and maintenance.

B. Install separate devices furnished by manufacturer and not factory installed, including but not limited to float rods and floats, basins, basin covers and all related accessories, guide rail system, lift rods/cables, control panels, and any manufacturer's accessory devices necessary or recommended to meet the particular needs of the pump installation.

C. Protect basins from trash and debris at all times including during temporary service.

SEWAGE AND GRINDER SEWAGE PUMP INSTALLATIONS SHOULD NOT BE DESIGNED WITH A DISCHARGE PIPE LESS THAN 2". INDICATE THE PIPE SIZE ON THE DRAWINGS.

D. For all sewage and grinder sewage pump installations, regardless of pump connection size, provide minimum 2 inch diameter pipe (or larger as indicated) on the discharge side of each pump.

E. Provide a check valve and an isolation valve on each pump discharge pipe, near and above the basin cover or sump top rim level. Locate the check valve upstream of the isolation valve. Provide check valves of the type specified in Part 2.

F. Where discharge piping is below grade, locate the check and isolation valves outside of the basin in an accesses pit with access cover.

G. Run all power, float, and control wiring in conduit between basin cover and control panel. Seal inner diameter of conduit with sealing putty and connect to basin cover.

1. *Power cords* of elevator sump pumps shall not be run in conduit. Connect directly to the non-GFCI outlet in the elevator hoistway that is controlled by the pump control panel. Install weatherproof cover on the outlet.

H. Verify proper pump rotation of pumps before installing in basins.

I. Adjust level control to prevent effluent in the sump basin from rising to within 2 inches of the invert of the lowest gravity drain inlet connection to the sump.

J. Adhere to manufacturer's start-up instructions.

3.3 TEMPORARY SERVICE

A. Start units for temporary use only with the expressed written permission of the Project Manager and in compliance with all requirements of the Contract Documents.

B. Prior to placement into temporary service, perform manufacturer's pre-start protocols.

C. Commission equipment prior to putting into temporary service to the extent required by the Commissioning Authority. Re-perform all commissioning activities prior to Owner acceptance, even if previously commissioned to prepare for temporary service.

D. Perform all required routine maintenance procedures during temporary service. Continuously maintain a log of such procedures. Store the log at unit during temporary use period and include log as part of the final O&M manual.

3.4 FIELD QUALITY CONTROL

A. In the presence of the Commissioning Authority:

1. Demonstrate the functionality of the slide rails by sliding the pump over the full length of the rails and out the basin cover, and reseating the pump on the stationary flange without entering the basin.
2. Demonstrate the operation of the pump by filling the basin with water and verifying all functions of the pump and control panel. Provide temporary plugs in basin connections to allow filling the basin for testing. Remove plugs at completion of testing.

WHEN JUSTIFIED, REQUIRE START-UP SERVICES BY A FACTORY SERVICE TECHNICIAN, OTHERWISE DELETE THE PARAGRAPH BELOW.

B. Provide a factory trained service technician to perform start-up services. The service technician shall perform the following:

1. Verify correct installation and organize, instruct and assist the mechanical contractor's personnel in start-up procedures.
2. Perform manufacturer’s pre-start checks.
3. Set all safety devices.
4. Commission the pump package, including demonstrating all safeties, proper pump staging, alteration, and all other features.
5. Provide a written service report prepared on site and submitted at the time of each service visit (with copies immediately provided to the Owner and Commissioner). Report shall indicate services provided and list all controller settings.
6. Train Owner personnel. Training and start up services are separate functions and training shall not be combined with startup services.

INCLUDE THE ARTICLE BELOW IN EVERY SPECIFICATION SECTION.

3.5 COMMISSIONING

A. Perform Commissioning activities per Related Sections above.

WHEN JUSTIFIED, REQUIRE TRAINING BY A FACTORY SERVICE TECHNICIAN, OTHERWISE DELETE THE FIRST PARAGRAPH BELOW.

3.6 TRAINING

A. Provide a qualified service technician from the Manufacturer's staff to provide training.

B. Train Owner's maintenance personnel on equipment operation, start-up and shutdown, trouble-shooting, servicing and preventative maintenance procedures, pump access and pump removal. Review the data contained in the Operating and Maintenance Manuals with Owner's personnel.

1. Provide 2 hours training, minimum.

END OF SECTION 221333

UNIVERSITY OF MICHIGAN
ARCHITECTURE, ENGINEERING AND CONSTRUCTION

ARCHITECTURE & ENGINEERING
326 East Hoover, Mail Stop B
Ann Arbor, MI 48109-1002
Phone: 734-764-3414
Fax: 734-936-3334

BuildingName
The Description of the Project
P00000000 0000

SPECIFICATION DIVISION 22

NUMBER SECTION DESCRIPTION

DIVISION 22 PLUMBING
SECTION 221500 - COMPRESSED AIR ACCESSORIES

END OF CONTENTS TABLE

DIVISION 22 PLUMBING
SECTION 221500 - COMPRESSED AIR ACCESSORIES

REVISIONS:
8-1-99: CONTENT APPROVED AS NEW MASTER
8-11-99: REVISED TO VBS.DOT TEMPLATE

EDITOR: SEE 230900 FOR COMPRESSORS, DRYERS, AND ACCESSORIES FOR CONTROL (INSTRUMENT) AIR USE. THE ACCESSORIES SPECIFIED BELOW ARE NOT TYPICALLY SPECIFIED FOR CONTROL AIR USE; NOTE THE DESCRIPTION IN THE SCOPE OF WORK, BELOW.

PART 1 - GENERAL

1.1 RELATED DOCUMENTS

INCLUDE PARAGRAPH 1.1.A AND B IN EVERY SPECIFICATION SECTION. EDIT RELATED SECTIONS 1.1.B TO MAKE IT PROJECT SPECIFIC.

A. Drawings and general provisions of the Contract, Standard General and Supplementary General Conditions, Division 1 Specification Sections, and other applicable Specification Sections including the Related Sections listed below, apply to this Section.

1.2 SCOPE OF WORK:

A. Provide piping, fittings, and specialties for the following systems:

1. Compressed air regulators, filters, drain valves, relief valves and lubricators, for compressed air systems **not** associated with control (instrument) air or medical air systems.

PART 2 - PRODUCTS:

2.1 COMPRESSED AIR SPECIALTIES:

SPEC EDITOR: BELOW FOR LARGE CAPACITY ON AIR MAINS. MODIFY DESCRIPTION AS REQUIRED. ADDITIONAL RESEARCH REQUIRED.

A. Pressure Regulating Valve: Bronze body, direct-acting, spring-loaded, manual pressure setting adjustment, pressure gauges, and rated for 150-psig inlet pressure. Manufacturers: Landis and Staefa Series 201, Van Aire, Wilkerson

B. Compressed Air Filter - General Requirements: Housings shall be corrosion resistant, rated for minimum of 150psig. Capacity, accessories and configuration (simplex or duplex) as indicated on drawings. Furnish spare filter set. Manufacturers: Hankinson, Van Aire, Wilkerson, Zeks

SPEC EDITOR: THIS IS A GOOD GENERAL PURPOSE FILTER, SUITED FOR REMOVAL OF HIGH VOLUMES OF OIL AND WATER.

C. Compressed Air Filter - Centrifugal/Coalescing and Impingement: Cleanable perforated stainless steel coalescing inner core, with automatic drain and in-depth impingement filter outer section. Designed for efficient removal of water droplets (99%) and oil aerosols (40%) via coalescence, and removal of particles to 3 microns. Manufacturer: Hankinson Centriflex

SPEC EDITOR: THE FOLLOWING IS FOR MORE EFFICIENT REMOVAL OF WATER AND OIL AND PARTICLES.

D. Compressed Air Filter - Combination Coalescing and Impingement: Glass fiber coalescing inner core, with automatic drain and in-depth impingement filter outer section. Designed for efficient removal of water droplets (100%) and oil aerosols (70%) via coalescence, and removal of particles to 1 microns. Manufacturer: Hankinson 3100 Series

SPEC EDITOR: THE FOLLOWING IS FOR FINE FILTRATION AND WATER AND OIL REMOVAL, BUT IN LOWER QUANTITIES. GOOD FINAL FILTER FOR CONTROL AIR, BUT USE ONE OF THE FILTERS ABOVE FIRST.

E. Compressed Air Filter - Fine Impingement: Inner foam distributing core, fine glass fiber coalescing and impingement core, foam final coalescing outer section, and with automatic drain. Designed for efficient removal of oil (99.999%) via coalescence, and removal of particles to 0.025 microns. Manufacturer: Hankinson Aerolescer

SPEC EDITOR: THE FOLLOWING IS NOT GENERALLY REQUIRED. IF USED, IT SHOULD HAVE A COALESCING FILTER FIRST.

F. Compressed Air Filter - Adsorption: Include activated carbon capable of removing virtually 100% of oil aerosols, with color change dye to indicate when carbon is saturated, and with final filter to contain carbon dust to 0.025 microns. Manufacturer: Hankinson Hypersorb

SPEC EDITOR: THE FOLLOWING IS AN OLD CARRYOVER SPEC WITH SOME EDITS AND MANUFACTURERS ADDED. ADDITIONAL RESEARCH IS REQUIRED. CONSIDER AUTOMATIC BALL FLOAT TYPE (WRIGHT AUSTINB MODEL 90-AC OR ARMSTRONG NO.21 VS. ATOMIZING TYPE, NICHOLSON DRAIN-AIR.)

G. Automatic Drain Valves: Corrosion-resistant metal body and internal parts, rated for 150-psig minimum working pressure, capable of automatic discharge of collected condensate. Manufacturer: Drain-all, Van Aire Draintender, Zeks, Hankinson Snap-Trap

SPEC EDITOR: RELIEF VALVE IS USUALLY SPECIFIED WITH THE AIR COMPRESSOR.

H. Pressure Relief Valve: Brass body, spring relief, capacity and factory set relief pressure as indicated on drawings.

SPEC EDITOR: LUBRICATORS ARE INFREQUENTLY REQUIRED, ONLY WHERE PNEUMATIC TOOLS REQUIRE OIL FOR LUBRICATION. ADDITIONAL RESEARCH IS REQUIRED. CHECK FISHER TYPE 67FR.

I. Air-Line Lubricators: Sizes and capacities indicated; equip with drip chamber and sight dome for observing oil drop entering air stream; with oil feed adjustment screw, and quick-release collar for easy bowl removal.

PART 3 - EXECUTION

3.1 PIPING INSTALLATION

A. See Related Section 221113 for piping materials and installation requirements.

3.2 SPECIALTIES INSTALLATION AND START-UP

A. Install drain and vent from automatic drain valves per manufacturer's instructions. Route drain to floor drain or location approved by engineer.

B. After installation is complete test operation of regulators, and automatic drain valves.

C. Instruct owner on location, operation, and maintenance of piping specialties.

END OF SECTION 221500

UNIVERSITY OF MICHIGAN
ARCHITECTURE, ENGINEERING AND CONSTRUCTION

ARCHITECTURE & ENGINEERING
326 East Hoover, Mail Stop B
Ann Arbor, MI 48109-1002
Phone: 734-764-3414
Fax: 734-936-3334

BuildingName
The Description of the Project
P00000000 0000

SPECIFICATION DIVISION 22

NUMBER SECTION DESCRIPTION

DIVISION 22 PLUMBING
SECTION 223116 – WATER SOFTENER

END OF CONTENTS TABLE

DIVISION 22 PLUMBING
SECTION 223116 – WATER SOFTENER

2012-09-17: NEW VERSION ISSUED.

2014-01-06: IMPROVED LEAD FREE REQUIRMENTS TO REFLECT U.S SAFE DRINKING WATER ACT REQUIREMENTS THAT WENT INTO EFFECT JAN. 4, 2014. D.KARLE FOR MTT.

PART 1 - GENERAL

1.1 RELATED DOCUMENTS

INCLUDE PARAGRAPH 1.1.A AND B IN EVERY SPECIFICATION SECTION. EDIT RELATED SECTIONS 1.1.B TO MAKE IT PROJECT SPECIFIC.

A. Drawings and general provisions of the Contract, Standard General and Supplementary General Conditions, Division 1 Specification Sections, and other applicable Specification Sections including the Related Sections listed below, apply to this Section.

B. Related Sections:

1. 220500 Common Work Results for Mechanical
2. 221113 Piping Materials and Methods
3. 220523 Valves
4. 220519 Thermometers, Pressure Gauges, and Accessories
5. 221119 Domestic Water Piping Specialties
6. Division 26: Electrical.

SPEC EDITOR: WHEN EDITING THIS SPEC TO MAKE IT PROJECT SPECIFIC, REVISE THE SUMMARY SECTION BELOW ACCORDINGLY.

1.2 SUMMARY

A. Section Includes:

1. Brine Regenerated Water Softening Systems.

1.3 SUBMITTALS

A. Product Data: For each type of fixture product.

1. Water softening system and accessories including rated capacities, operating characteristics, furnished specialties, accessories, dimensions of individual components and profiles.
2. Construction details and piping diagrams of water softening system and components.
3. Wiring diagrams for power, signal, control wiring and monitoring points tied into the owners building monitoring system.
4. Proof of NSF 61 compliance for softeners used for drinking water systems.
5. Operation and maintenance manuals.

1.4 QUALITY ASSURANCE

SPEC EDITOR: RETAIN PARAGRAPHS A AND B IN EVERY PROJECT SPECIFICATION.

A. Manufacturers and Products: The products and manufacturers specified in this Section establish the standard of quality for the Work. Subject to compliance with all requirements, provide specified products from the manufacturers named in Part 2.

SPEC EDITOR: REVISE THE REFERENCE STANDARDS FOR PROJECT REQUIREMENTS.

B. Reference Standards: Products in this section shall be built, tested, and installed in compliance with the following quality assurance standards; latest editions, unless noted otherwise.

1. Michigan Plumbing Code
2. Electrical components, devices and accessories: UL Listed and labeled as defined as in NFPA 70, Article 100.
3. ASME Boiler and Pressure Vessel Code: Section VII, Division 01, where indicated.
4. ASME compliance for FRP Tanks: Fabricate and label mineral tanks to comply with ASME Boiler and Pressure Vessel Code
5. National Sanitation Foundation NSF/ANSI-61 (potable drinking water) and NSF-61 Annex G (listed as ≤ 0.25% weighted average lead content) (and/or NSF/ANSI-372) and Annex F.
6. U.S Safe Drinking Water Act.

1.5 COORDINATION

A. Coordinate size and location of concrete bases.

1.6 WARRANTY

A. Provide a complete parts and labor warranty for a minimum of one year from the date of Substantial Completion.

PART 2 - PRODUCTS

2.1 MANUFACTURERS

A. Acceptable Manufacturers:

1. Siemens Water Technologies
2. Crown Solutions
3. R.A. Bruner
4. Ecodyne Industrial

2.2 WATER SOFTENER

A. Provide a factory assembled, pressure type packaged water softener, consisting of a softener tank, valve, brine tank (including first full fill of the brine tank), etc., all as required for a complete system. Constructed to handle up to 120 degree Fahrenheit water.

B. When used for drinking water systems, water softening system shall comply with NSF 61, "Drinking Water System Components – Health Effects"

SPEC EDITOR: REVISE THE PERFORMANCE FOR PROJECT REQUIREMENTS.

2.3 PERFORMANCE

A. Provide a water softening systems that delivers the output water quality, capacity, and performance indicated below at the specified water input characteristics indicated.

B. Input water characteristics:

1. Raw City of Ann Arbor water. City of Ann Arbor water quality base line data can be found at the following web site: http://www.a2gov.org/government/publicservices/water_treatment.
2. Up to 120 degree Fahrenheit water inlet temperature.

C. Output capacity and performance:

SPEC EDITOR: REVISE TO SIMPLEX RESIN TANK IF CONTINUOUS SOFTENER OPERATION IS NOT REQUIRED.

1. Duplex resin tanks to provide continuous operation.
2. Minimum Control valve pipe size 1".
3. Peak flow rate: _____ GPM @ a maximum 15 psi pressure drop.
4. Total water softened in 24 hours: _____ gallons.
5. Maximum of one regeneration per 72 hour period.
6. Regenerations between brine tank refills: _____.
7. Water quality output conditions in CaCO3 equivalents:
   a. - ppm hardness
   b. - ppm ferrous iron

SPEC EDITOR: REVISE THE TANK PRESSURE RATINGS GIVEN BELOW, IF NECESSARY FOR THE APPLICATION.

2.4 RESIN TANK

A. Resin tank shall have no less than 50% free-board, be designed for 100 psig, and be tested at 150 psig. Tanks shall be steel with phenolic lining or fiberglass wound type. Steel tanks shall be internally lined with a phenolic epoxy to a 4-6 mil thickness and then baked at 400 degrees F. The exterior shall be sand blasted, painted with a rust-inhibiting primer and then finished with a gloss epoxy top coat. Tank shall have a 15 year non-prorated guarantee.

B. Tank shall be equipped with an opening in the top head for mineral filling and periodic inspection.

2.5 BRINE SYSTEM:

A. Brine system shall consist of combination salt storage and brine tank. Tank shall be molded of corrosion-proof, high density polyethylene.

B. Brine tank shall be equipped with an elevated salt plate for brine collection, and a chamber to house a brine valve assembly. The brine valve shall automatically open to admit brine to the resin tank during eduction and close automatically to prevent introduction of air into the resin tank. During refill, the brine valve shall regulate the flow of treated water into the brine tank, working with the timed refill feature of the control valve. Together these components shall admit the correct volume of water to the brine tank in accordance with the salt dosage settings on the control valve. The brine valve shall include a float operated safety shut-off valve as a backup to the timed refill valve on the controller to prevent brine tank overflow

2.6 DISTRIBUTOR SYSTEM:

A. Resin tank shall have a stainless steel upper distributor which shall disperse water laterally to avoid channeling within the resin bed. The lower distributor shall be of all plastic construction in a hub-radial design. It shall incorporate fine slot distributors to avoid passing of resin to service in the event of plumbing system upset. No slots shall face upward to minimize the opportunity of channeling. One layer of gravel shall be provided to aid in the even collection of water and make efficient use of the softening capacity of the resin.

2.7 SOFTENING MEDIA:

A. High-capacity sulfonated polystyrene ion-exchange resin that is stable over the entire pH range of the water being treated with good resistance to bead fracture from attrition or shock. Minimum exchange capacity of 30,000 grains/cu. ft. when regenerated with 15 pounds of salt. The media shall be solid, of the proper particle size and shall contain no agglomerates, shells, plates or other shapes that might interfere with the normal function of the water softener. The resins shall be manufactured to comply with the food additive regulations, 21 CFR 173.25 as set forth by the US FDA.

2.8 AUTOMATIC CONTROLS:

A. Automatic controls shall be of top mount design. Provide corrosion proof valve head construction, with no dissimilar metals, utilizing a bolt-down flange connection to permit proper positioning between the valve and the conditioner tank openings. Valve head shall have provisions for either left-hand or right-hand raw water plumbing connections to simplify installation while maintaining a forward facing controller for easy servicing. Provide readily accessible service connections. Provide a fully automatic multi-port control valve operated by a rotary pilot that hydraulically or pneumatically activates cartridge style diaphragm valves to accomplish regeneration. The multi-port valve shall incorporate self-adjusting flow regulators to control the rate of flow and prevent resin loss during back-wash, brine rinse, and brine refill positions, regardless of pressure fluctuations between 30 and 100 psig. The control shall open and close slowly to prevent noise and hydraulic shock. It shall have provisions for manual by-pass of hard water. The electrical control mechanism shall be enclosed in a gasketed, moisture-and corrosion resistant case. The enclosure shall conform to NEMA 3 enclosure standards.

B. On duplex resin tank systems, the controller shall automatically switched back and forth between charged and expended resin tanks to provide a continuous supply of soft water.

C. Provide a digital demand control system installed on the unit. It shall include a turbine meter and a solid state control device to permit regeneration on a metered volume basis. The totalizing turbine water meter shall be installed in the outlet pipe of the unit. This meter shall continuously measure and record the amount of treated water that has flowed to the service. Regeneration shall not be activated until a user adjustable time of day. The controller shall also indicate the current flow rate and the estimated days' remaining before a brine tank refill is required.

D. Controls shall have an adjustable duration of the various steps in regeneration and allow for pushbutton manual operation. Control system shall have 10 year non prorated guarantee. Regeneration shall be initiated based on total gallons softened (programmable) and average daily use, compensated for extra-high or low use, with time of regeneration preset to a user selectable time.

2.9 AUXILIARY EQUIPMENT

A. Provide pressure gauge on inlet and outlet of softener.

B. Provide test cock to sample water in and soft water out.

2.10 BRINE

A. High-purity sodium chloride, free of dirt and foreign material. Processed, food grade salt pellets, 99% pure. Rock and granulated forms are not acceptable.

2.11 INSTRUCTIONS:

A. Provide 4 complete sets of installation, operation and maintenance manuals covering the equipment.

PART 3 - EXECUTION

3.1 INSTALLATION:

A. Complete installation shall be in accordance with manufacturer's instruction and recommendations. Contractor shall be responsible for receiving all equipment, placing and assembling of all components for a complete and operational system.

B. Install the equipment level on a concrete base sloped so that water will not stand under or around the equipment.

C. Make all connections required. Provide rigid connections to softener input and output water connections, using approved joining methods. Hoses shall not be used.

D. Install service valves to isolate the softener system input and output, and to provide a bypass path around the softener to allow softener servicing.

E. Install brine tank overflow drain line, routed to a floor drain, terminated with an approved air gap. Use approved materials and secure drain line using approved hangers.

F. For softeners used in drinking water systems, flush, clean, and disinfect per Related Section and manufacturer’s instructions.

3.2 CHECK, TEST & START-UP:

A. Check, test and start-up services shall be provided by a factory trained representative as follows:

1. Inspect the equipment to verify proper installation.
2. Set-up the controller and place the equipment into operation.
3. Test to verify all performance.

B. The manufacturer representative's shall provide a written report within 3 days of the Check, Test, Start-up. Report shall include information on services provided, document all controller settings, and indicate the results of the water quality performance tests.

3.3 TRAINING

A. Factory trained representative shall provide training to owner maintenance staff on the control and operation of the softening equipment and accessories. This shall include adjusting controller settings, cleaning of eductor and filters, other general maintenance procedures, and rebuilding the control valve head. Provide a spare control valve head to demonstrate rebuilding.

3.4 COMMISSIONING

A. Perform the commissioning activities as outlined in the Division 01 Section Commissioning and other requirements of the Contract Documents.

END OF SECTION 223116

UNIVERSITY OF MICHIGAN
ARCHITECTURE, ENGINEERING AND CONSTRUCTION

ARCHITECTURE & ENGINEERING
326 East Hoover, Mail Stop B
Ann Arbor, MI 48109-1002
Phone: 734-764-3414
Fax: 734-936-3334

BuildingName
The Description of the Project
P00000000 0000

SPECIFICATION DIVISION 22

NUMBER SECTION DESCRIPTION

DIVISION 22 PLUMBING
SECTION 224200 - PLUMBING FIXTURES

END OF CONTENTS TABLE

DIVISION 22 PLUMBING
SECTION 224200 - PLUMBING FIXTURES

2011-05-18: REVISED FORMAT, REINSERTED SUBMITTAL, EXTENSIVE MODIFICATIONS TO TECHNICAL CONTENT.

2011-05-24: ADDED REQUIREMENT TO ALL EMERGENCY FIXTURES THAT THEY BE BARRIER FREE.(D.KARLE PER J. JEFFERY)

2012-09-12: ADDED SPEC. EDITORS NOTE TO SECTION 2.31 TO ASK DESIGN MANAGER IF BOTTLE FILLERS SHOULD BE PROVIDED.

2013-09-06: REVISED SS SINK MODEL NUMBERS (ARTICLES 2.16, 2.17, 2.18 AND WATER COOLER MODEL NUMBERS (2.31). M. OLIVER.

2014-01-06: IMPROVED LEAD FREE REQUIRMENTS TO REFLECT U.S SAFE DRINKING WATER ACT REQUIREMENTS THAT WENT INTO EFFECT JAN. 4, 2014. D.KARLE FOR MTT.

PART 1 - GENERAL

1.1 RELATED DOCUMENTS

INCLUDE PARAGRAPH 1.1.A AND B IN EVERY SPECIFICATION SECTION. EDIT RELATED SECTIONS 1.1.B TO MAKE IT PROJECT SPECIFIC.

A. Drawings and general provisions of the Contract, Standard General and Supplementary General Conditions, Division 1 Specification Sections, and other applicable Specification Sections including the Related Sections listed below, apply to this Section.

B. Related Sections:

1. Section 123553 Laboratory Casework
2. Section 115313 Laboratory Fume Hoods
3. Section 220500 Common Work Results for Mechanical
4. Section 221113 Piping Materials and Methods
5. Section 220523 Valves
6. Division 26: Electrical.

SPEC EDITOR: WHEN EDITING THIS SPEC TO MAKE IT PROJECT SPECIFIC, REVISE THE SUMMARY SECTION BELOW ACCORDINGLY.

1.2 SUMMARY

A. Section Includes:

1. Water Closets
2. Water Closet Seats.
3. W.C. and Urinal Wall Carriers.
4. Urinals.
5. W.C. and Urinal Flush Valves.
6. Lavatories, Sinks, Service Sinks, and related Faucets and Trim.
7. Lavatory Support Systems.
8. Under-Sink Waste and Supply Pipe Guards.

9. Thermostatic Mixing Valves (for hand-wash facilities).
10. Shower Heads and Shower Control Valves.
11. Electric Water Coolers.
12. Emergency Fixtures, Tempering Valve, Alarm System.
13. Garbage Disposer.
14. Washing Machine Valve Box.
15. Supply Tubes and Stops.
16. Installation of fixtures including fixtures supplied by others for casework and fume hoods.

1.3 SUBMITTALS

A. Product Data: For each type of fixture product.

1. Construction details, material descriptions, rated capacities, operating characteristics dimensions of individual components and profiles, and finishes for fixtures.
2. Water consumption data.
3. Wiring diagrams for power, signal, and control wiring
4. Proof of compliance to NSF/ANSI 61.

1.4 QUALITY ASSURANCE

SPEC EDITOR: RETAIN PARAGRAPHS A AND B IN EVERY PROJECT SPECIFICATION.

A. Manufacturers and Products: The products and manufacturers specified in this Section establish the standard of quality for the Work. Subject to compliance with all requirements, provide specified products from the manufacturers named in Part 2.

B. The Contractor shall verify and resolve compatibility between separate components (e.g. that lavatory hole quantity and centering match that of the specified faucet, supports are compatible with respective urinals and water closets, etc.). **Model numbers, when provided, are partial model numbers for identifying style. Provide fixtures that meet all the specified requirements.**

SPEC EDITOR: REVISE THE REFERENCE STANDARDS FOR PROJECT REQUIREMENTS.

C. Reference Standards: Products in this section shall be built, tested, and installed in compliance with the following quality assurance standards; latest editions, unless noted otherwise.

1. Michigan Plumbing Code
2. National Sanitation Foundation NSF/ANSI-61 (potable drinking water) and NSF-61 Annex G (listed as ≤ 0.25% weighted average lead content) (and/or NSF/ANSI-372) and Annex F.
3. U.S Safe Drinking Water Act.
4. ANSI Z358.1-2009 Standard for Emergency Eyewash and Shower Equipment

1.5 WARRANTY

A. Provide a complete parts and labor warranty for a minimum of one year from the date of Substantial Completion.

PART 2 - PRODUCTS

2.1 WATER CLOSETS - GENERAL

A. Vitreous china; color white unless noted otherwise. Elongated bowl, direct-fed siphon jet action. 1-1/2 inch top spud for external flush valve. China bolt covers. For 10 in. or 12 in. rough-in (floor mounted models). Dimensions within ASME Standard A112.19.2 tolerances.

B. Shall meet ASME A112.19.2 flush requirements at 1.1 gpf (liquids disposal) and 1.6 gpf (solids disposal) when equipped with a dual flush style valve.

2.2 WATER CLOSETS - STANDARD AND BARRIER FREE

A. WC-A - Wall mounted.

1. ADA compliant when installed so top of seat is 17 in. to 19 in. from the finished floor.
2. Acceptable Manufacturers:
   a. American Standard "Afwall".
   b. Kohler "Kingston".
   c. Crane "Placidus".

SPEC EDITOR: ITEM WC-B BOWL IS 15 IN. HIGH FOR STANDARD INSTALLATION. NOT ADA COMPLIANT.

B. WC-B: Floor mounted 15" nominal height, non-ADA compliant.

1. Acceptable Manufacturers:
   a. American Standard "Madera"
   b. Kohler "Wellcomme".
   c. Crane "Whirlton".

SPEC EDITOR: ITEM WC-C BOWL IS NOMINAL 17 IN. HIGH FOR ELDERLY, SPECIAL NEEDS, AND ADA INSTALLATIONS

C. WC-C-Floor mounted ADA compliant.

1. Acceptable Manufacturers:
   a. American Standard "Madera Right Height".
   b. Kohler "Highcliff".
   c. Crane "Hymont".

2.3 WATER CLOSET FLUSH VALVES

SPEC EDITOR: THE BELOW DUAL FLUSH VALVE IS U-M'S STANDARD FOR WATER CLOSET APPLICATIONS.

A. WC-FLV-A: Manual, dual flush valve. Chrome plated, exposed, diaphragm type, water closet flushometer. ASTM classified as semi-red brass alloy. Chloramine resistant synthetic rubber diaphragms/seals. With 1-1/2 inch top spud, escutcheons, seat bumper, integral screwdriver stop and vacuum breaker. ADA compliant.

1. Lifting Handle up initiates reduced flush 1.1 gpf eliminating liquid waste. Pushing handle down initiates full flush of 1.6 gpf eliminating all waste.
2. Provide metal wall plate etched with flushing instructions.

SPEC EDITOR: PIPE SUPPORT RING, BELOW, IS RECOMMENDED FOR HIGH USE AREAS, FOR EXAMPLE, RESIDENCE HALLS. BLOCKING SHOULD BE SPECIFIED FOR NON-MASONRY WALLS IF THIS PIPE SUPPORT IS SPECIFIED.

3. With flush valve manufacturer's chrome plated split ring wall pipe support accessory.
4. Acceptable Manufacturers and Models:
   a. Sloan "Uppercut".
   b. Zurn "AquaVantage".

2.4 WATER CLOSET ACCESSORIES

A. WCS-A Standard Seat: 1 in. high: Solid white plastic, open front, extended back, self-sustaining stainless steel bolts and hinges, molded-in bumpers, without cover. Acceptable Manufacturers:

1. Bemis.
2. Church.
3. Centoco

B. WCS-B High Style ADA Seat: where required to meet ADA requirements; 2 in. high, solid white plastic, open front, extended back, self-sustaining stainless steel bolts and hinges, molded-in bumpers, without cover. Acceptable Manufacturers:

1. Bemis
2. Church
3. Centoco.

C. Water Closet Wall Carrier: Fully compatible with water closet installation, adjustable, high extension (barrier free), cast iron frame with integral drain hub and vent, lugs for floor and wall attachment and threaded fixture studs. Acceptable Manufacturers and Models:

1. Zurn.
2. Josam.
3. J.R. Smith.
4. Wade Drain.

2.5 URINALS - GENERAL:

A. Vitreous china with extended sides and 14 in. elongated rim. Color white unless noted otherwise. With wall hangers.

SPEC EDITOR: CLARIFY WHICH FLUSH VALVE IS TO BE USED WITH URINAL, EITHER THROUGH DRAWING SCHEDULE OR PROJECT SPECIFIC SPECIFICATION EDIT.

2.6 URINALS AND ACCESSORIES

A. UR-A: Shall meet ASME A112.19.2 flush requirements at 0.125 gpf. Washout action. 3/4 inch top spud, 2-inch back spud. Vandal resistant outlet strainer.

1. Acceptable Manufacturers:
   a. American Standard "Washbrook FloWise".
   b. Kohler "Bardon".
   c. Zurn "The Pint".

B. Urinal Wall Carrier: Fully compatible with urinal installation. Cast iron or steel frame, complying with load and deflection requirements of ASME Standard A112.6.1M. Tubular legs, lugs for floor and wall attachment, threaded fixture studs and hardware for hanger and bearing plate. Acceptable Manufacturers and Models:

1. Zurn.
2. Josam.
3. J.R. Smith.
4. Wade Drain.

2.7 URINAL FLUSH VALVES

SPEC EDITOR: AUTOMATIC BATTERY OPERATED URINAL FLUSH VALVE IS U-M STANDARD.

A. U-FLV-A: 0.125 gpf Sensor Activated Urinal Flush Valve. Chrome plated, exposed, diaphragm type, urinal flushometer. ASTM classified as semi-red brass alloy. Chloramine resistant synthetic rubber diaphragms/seals. With 3/4 inch top spud, escutcheons, integral screwdriver stop and vacuum breaker. ADA compliant. Infrared sensor, controls.

1. Shall meet ASME A112.19.2 flush requirements at 0.125 gpf.
2. Size AA size batteries, factory installed.
3. Acceptable Manufacturers:
   a. Sloan "ECOS".
   b. Zurn "EcoVantage".
   c. Kohler 1/8 gpf touchless.

SPEC EDITOR: SELECT MANUAL URINAL FLUSH VALVE ONLY WHEN AUTHORIZED BY THE DESIGN MANAGER.

B. U-FLV-B: Manual Urinal Flush Valve. Chrome plated, exposed, diaphragm type, urinal flushometer. ASTM classified as semi-red brass alloy. Chloramine resistant synthetic rubber diaphragms/seals. With 3/4 inch top spud, escutcheons, integral screwdriver stop and vacuum breaker. ADA compliant.

1. Shall meet ASME A112.19.2 flush requirements at 0.125 gpf.
2. Acceptable Manufacturers and models:
   a. Sloan "Royal".
   b. Zurn "AquaVantage".

SPEC EDITOR: LAVS AND SINKS AND ASSOCIATED FAUCETS ARE TYPICALLY PROVIDED IN THIS SECTION FOR TOILET ROOMS AND KITCHENS. SINKS AND FAUCETS ARE SPECIFIED FOR LAB CASEWORK IN A DIVISION 12 SECTION AND PIPED UNDER THIS SECTION. MODEL NUMBERS INDICATED ARE PARTIAL MODEL NUMBERS FOR STYLE ONLY. DESIGNER MUST EDIT THE BELOW TO MATCH LAVS WITH LAV FAUCETS; FOR PROJECTS WITH MULTIPLE LAV AND FAUCET STYLES THIS IS BEST DONE WITH A SCHEDULE ON THE DRAWINGS.

LAVS ARE ADA COMPLIANT IF INSTALLED IN COUNTERTOP OR MOUNTED ON WALL IN COMPLIANCE WITH ADA REQUIREMENTS.

2.8 LAVATORIES - GENERAL

A. Lavatories: Vitreous china. Color white unless noted otherwise. With faucet ledge, overflow, and polished chrome plated brass strainer grid drain. ADA compliant.

2.9 LAV-A: COUNTERTOP LAVATORY (SINGLE CENTER FAUCET HOLE)

SPEC EDITOR: THE FOLLOWING BASIN IS TYPICALLY USED WITH FAUCET LF-A SENSOR FAUCET.

A. Lav-A: Countertop Self-rimming Lavatory: Oval, single center faucet hole.

1. Nominal overall: 20-3/8 in. wide by 17-3/8 in. front to back.
2. Bowl: Nominal 5-5/8 in. deep.
3. Acceptable manufacturers and models:
   a. American Standard "Aqualyn" 0475.
   b. Crane "Galaxy" 1287.
   c. Kohler "Bryant" K-2699.
   d. Zurn Z5110 Series.

2.10 LAV-B: COUNTERTOP LAVATORY (8-IN. CENTER FAUCET HOLES)

SPEC EDITOR: THE FOLLOWING BASIN IS TYPICALLY USED WITH FAUCET LF-B TWO HANDLED MANUAL FAUCET.

A. Lav-B: Countertop Self-rimming Lavatory: Oval, three hole with 8-in. center faucet holes.

1. Nominal overall: 20-3/8 in. wide by 17-3/8 in. front to back.
2. Bowl: Nominal 5-5/8 in. deep.
3. Acceptable manufacturers and models:
   a. American Standard "Aqualyn" 0475.
   b. Crane "Galaxy" 1287.
   c. Kohler "Bryant" K-2699.
   d. Zurn Z5110 Series.

2.11 LAV-C: WALL MOUNTED LAVATORY (SINGLE CENTER FAUCET HOLE)

SPEC EDITOR: THE FOLLOWING BASIN IS TYPICALLY USED WITH FAUCET LF-A SENSOR FAUCET. KOHLER "KINGSTON" IS THE ONLY

KOHLER SINK AVAILABLE WITH SPLASH SHIELDS, HAS A HIGH BACKSPLASH COMPARED TO COMPETITORS, AND HAS A DATED LOOK.

A. Lav-C: Wall Mounted Lavatory D-shaped bowl: with single center faucet hole, self-draining deck area with contoured back and side splash shields.

1. Nominal overall dimensions: 20-1/2 in. wide by 18-1/4 in. front to back.
2. Bowl: 6-1/2 in. deep.
3. Acceptable manufacturers and models:
   a. American Standard "Lucerne" 0356.
   b. Kohler "Kingston".
   c. Zurn Z5340 Series.

2.12 LAV-D: WALL MOUNTED LAVATORY (8-IN. CENTER FAUCET HOLES)

SPEC EDITOR: THE FOLLOWING BASIN IS TYPICALLY USED WITH FAUCET LF-B TWO HANDLED MANUAL FAUCET. ORDER FOUR HOLE VARIATION IF SOAP DISPENSER TO BE USED ON LAV DECK (INTEGRAL SOAP DISPENSER NOT PREFERRED AT U-M). KOHLER "KINGSTON" IS THE ONLY KOHLER SINK AVAILABLE WITH SPLASH SHIELDS, HAS A HIGH BACKSPLASH COMPARED TO THE COMPETITORS, AND HAS A DATED LOOK.

A. Lav-D: Wall Mounted Lavatory, D-shaped bowl: three hole with 8 in. center faucet holes, self-draining deck area with contoured back and side splash shields.

1. Nominal overall dimensions: 20-1/2 in. wide by 18-1/4 in. front to back.
2. Bowl: 6-1/2 in. deep.
3. Acceptable manufacturers and models:
   a. American Standard "Lucerne" 0356.
   b. Kohler "Kingston".
   c. Zurn Z5340 Series.

2.13 LF-A: LAVATORY FAUCET (SENSOR OPERATED)

SPEC EDITOR: AUTOMATIC FAUCET IS UNIVERSITY STANDARD IN PUBLIC TOILET ROOMS.

SPEC EDITOR: MODEL NUMBERS INDICATED ARE PARTIAL MODEL NUMBERS FOR STYLE ONLY. FEATURES LISTED BELOW REPRESENT THOSE FOUND IN A QUALITY COMMERCIAL FAUCET. THEREFORE, IF ALTERNATE STYLES ARE BEING CONSIDERED, THEY SHOULD PROVIDE THE SAME FEATURES. U-M PREFERS SOLID BRASS FAUCETS FOR VANDAL RESISTANCE; NOTE THAT SOME MFR.'S METAL FAUCETS ARE NOT BRASS.

A. LF-A Lavatory Faucet: Automatic sensor activated hand washing faucet, battery powered. Polished chrome plated solid brass construction. ADA compliant. With trim.

1. Faucet, supplies, and stops shall be NSF/ANSI-61-G listed as ≤ 0.25% weighted average lead content.
2. Nominal spout height: 5-3/4 in.
3. For use in single hole lavatory.

SPEC EDITOR: THE BASE PLATE REQUIREMENT FOR THE STYLES BELOW IS SO THAT ALL MFR.'S MODELS LOOK SIMILAR. NOTE THAT SLOAN EBF-85 HAS AN INTEGRAL BASE PLATE WHICH CAN'T BE OMITTED.

4. Chrome/brass trim plate base for 4 in. faucet centers.
5. Serviceable filtered solenoid valve.
6. Batteries included, factory installed.
7. 0.5 gpm vandal resistant spray head with pressure compensating flow control.
8. Trim: Rigid supplies with metal handled stops, flat grid strainer, tailpiece, P-trap with clean-out, waste to wall, escutcheons; all chrome plated brass. Where concealed, trim under sinks may be unplated brass stops, plastic or rough brass supply tubes, PVC trap, and rough brass escutcheons.
9. Acceptable manufacturers and models:
   a. Sloan Model Optima EBF-85.
   b. American Standard "Selectronic" 6055.
   c. Zurn AquaSense Z6913.

2.14 LF-B: LAVATORY FAUCET (TWO HANDLED MANUAL, 8" CENTERS)

SPEC EDITOR: MANUAL FAUCET BELOW IS FOR AREAS WHERE AUTOMATIC LAV FAUCETS ARE NOT DESIRED. SPECIFIED FAUCET IS UNDER-MOUNT (CONCEALED) "WIDESPREAD" (8" FAUCET CENTERS) TYPE SUITABLE FOR USE WITH LAVATORIES OR COUNTERTOP MOUNTED SINKS. NOTE THAT A GRID DRAIN IS SPECIFIED; MODIFY DESCRIPTION IF A POP-UP DRAIN IS REQUIRED.

SPEC EDITOR: MODEL NUMBERS INDICATED ARE PARTIAL MODEL NUMBERS FOR STYLE ONLY. FEATURES LISTED BELOW REPRESENT THOSE FOUND IN A QUALITY COMMERCIAL FAUCET. THEREFORE, IF ALTERNATE STYLES ARE BEING CONSIDERED, THEY SHOULD PROVIDE THE SAME FEATURES. U-M PREFERS SOLID BRASS FAUCETS FOR VANDAL RESISTANCE; NOTE THAT SOME MFR.S METAL FAUCETS ARE NOT BRASS.

A. LF-B Lavatory Faucet: Polished chrome plated brass valves, spout, handles, spray head. Concealed (under-mount) body. ADA compliant. With trim.

1. Faucet, supplies, and stops shall be NSF/ANSI-61-G listed as ≤ 0.25% weighted average lead content.

SPEC EDITOR: EDIT FLAT GRID STRAINER TO POP-UP DRAIN, IF POP-UP REQ'D.

2. Chrome plated brass flat grid strainer.
3. Center of body to center of spout: 4" minimum.
4. Lever style handles, with hot and cold color indicators and vandal resistant mounting screws.
5. 8" rigid valve body centers (flexible tubing connections between valves and spout not allowed).
6. 0.5 gpm vandal resistant spray head.
7. Ceramic disc valve cartridges.
8. Trim: Rigid supplies with metal handled stops, tailpiece, P-trap with clean-out, waste to wall, escutcheons; all chrome plated brass. Where concealed, trim under sinks may be unplated brass stops, plastic or rough brass supply tubes, PVC trap, and rough brass escutcheons.
9. Acceptable manufacturers and models:

a. American Standard "Heritage" Widespread with No. 342 lever handles.
b. Moen "M-Dura"
c. Chicago 404 (for grid) or 746 (for pop-up) with curved lever handles.

2.15 LAVATORY SUPPORT SYSTEMS

SPEC EDITOR: SELECT EITHER OR BOTH SUPPORT SYSTEMS LISTED BELOW. GENERALLY, USE WALL MOUNTING BRACKET (LOWER COST) IN LIEU OF CARRIER, EXCEPT WHERE WALL FRAMING CANNOT SUPPORT THE LOAD OF THE LAVATORY (DRYWALL, ETC).

A. Wall Mounting Bracket: Steel bearing plate anchored to wall, furnished by lavatory manufacturer. Use at masonry walls only.

B. Wall Mounted Concealed Carrier Arms: cast iron and steel frame with tubular legs, lugs for floor and wall attachment, concealed arm supports, bearing plate and studs. Use at all walls except masonry type. Acceptable manufacturers:

1. Josam.
2. J.R. Smith.
3. Wade.
4. Zurn.

2.16 SINK-A: COUNTERTOP (SINGLE BOWL STAINLESS STEEL SELF-RIMMING)

SPEC EDITOR: SINK-A IS USED FOR KITCHENETTES/ COFFEE ROOMS WITH SINGLE BOWL SINK. USE SWING ARM FAUCET WITH SIDE SPRAY. NOTE THAT SIDE SPRAY 6" HOLE CENTER HAS BEEN SPECIFIED TO ACCOMMODATE ADA LEVER HANDLES.

A. Sink-A: Countertop Single Bowl: Type 304 stainless steel, 18 gauge, self-rimming, chrome plated brass drain/removable strainer, sound deadening coating, with mounting clamps.

1. Nominal overall dimensions 22 in. long by 25 in. wide by 8 in. deep.
2. 4 faucet holes, three holes on 4-in. centers, forth on nominal 6" center to accommodate side spray.
3. Acceptable manufacturers and models:
   a. Elkay "Gourmet."
   b. Kohler "Staccato."
   c. Just"SL" Series.

2.17 SINK-B: COUNTERTOP (DOUBLE BOWL STAINLESS STEEL SELF-RIMMING)

SPEC EDITOR: SINK-B IS USED FOR KITCHENETTES/ COFFEE ROOMS. USE SWING ARM FAUCET WITH SIDE SPRAY. NOTE THAT SIDE SPRAY 6" HOLE CENTER HAS BEEN SPECIFIED TO ACCOMMODATE ADA LEVER HANDLES.

A. Sink-B: Countertop Double Bowl: Type 304 stainless steel, 18 gauge, equal compartment size, self-rimming, (2) chrome plated brass drains/removable strainers (delete (1) if sink equipped with disposer), sound deadening coating, with mounting clamps.

1. Nominal overall dimensions. 22 in. long by 33 in. wide by 8 in. deep.
2. 4 faucet holes, three holes on 4-in. centers, forth on nominal 6" center to accommodate side spray.
3. Acceptable manufacturers and models:
   a. American Standard "Prevoir".
   b. Elkay "Lustertone."
   c. Kohler "Staccato."
   d. Just "DL" Series

2.18 SINK-C: COUNTERTOP (SMALL SINGLE BOWL SS SELF-RIMMING)

SPEC EDITOR: SINK-C IS USED FOR SMALLER SCALE KITCHENETTES/ COFFEE ROOMS. USE SWING ARM FAUCET WITHOUT SIDE SPRAY. NOT TYPICALLY AVAILABLE IN 18 GA.

A. Sink-C: Countertop Single Bowl: Type 304 stainless steel, self-rimming, chrome plated brass drain/removable strainer, sound deadening coating, with mounting clamps.

1. Nominal overall dimensions: 15 in. long by 15 in. wide by 7-11/16 deep.
2. 2 faucet holes on 4-in. centers.
3. Acceptable manufacturers and models:
   a. Kohler "Toccata."
   b. Elkay "Celebrity."
   c. Just "SL" Series.

2.19 SINK-D: COUNTERTOP (INTEGRAL)

SPEC EDITOR: THE FOLLOWING PARAGRAPH DESCRIBES ARCHITECTURALLY SPECIFIED BOWLS SUCH AS CORIAN SINK BOWL INTEGRAL WITH COUNTERTOP. COORDINATE WITH ARCHITECTURAL WORK.

A. Sink-D: Countertop Sink and countertop shall be provided by architectural (general) trades and specified in another Section.

SPEC EDITOR: SERVICE SINKS ARE USED IN MECHANICAL ROOMS AND JANITOR CLOSETS. SS-A IS FOR HEAVY DUTY LOCATIONS SUCH AS CHILLER AND BOILER ROOMS. SS-C IS FOR LIGHT DUTY LOCATIONS.

2.20 SS-A: SERVICE SINK (C.I. WALL MOUNTED)

A. SS-A: Wall mounted, concealed support, enameled cast iron, perforated grid strainer drain, with cast iron drain/trap.

1. Nominal 22 in. wide by 18- in. front to back by 9 in. high back by 11-1/4 in. high bowl.
2. Drilled back with 2 holes on 8 -in. centers.
3. Rim guard of stainless steel or chrome-plated brass on three sides.
4. Acceptable manufacturers and models:
   a. American Standard "Lakewell" Model 7692.008.
   b. Kohler "Bannon" Model K-6714 and 44602 rim guard.
   c. Zurn Z5898.

B. Cast Iron Drain/Trap: Cast iron P-trap with integral removable strainer, adjustable mounting foot, threaded brass cleanout plug. Supplied by sink manufacturer.

2.21 SS-B: SERVICE SINK (C.I. FLOOR MOUNTED CUSTODIAL)

A. SS-B: Floor mounted, enameled cast iron, corner model, strainer/drain, and vinyl-coated removable rim guard.

1. Nominal 28 in. wide by 28 in. long by 13 in. high at walls and 8 in. high rim at room side.
2. Acceptable manufacturers and models:
   a. American Standard "Florwell" Model 7745.811 with removable vinyl rim guard and flat grid drain 7721.038.
   b. Kohler K-6710 "Whitby" service sink with K-8940 Coated wire rim guard.
   c. Zurn Z5850-RG with removable vinyl-coated rim guard.

B. Strainer/Drain: Perforated flat grid strainer drain, polished chrome solid brass.

2.22 SS-C: SERVICE SINK (MOLDED FLOOR MOUNTED UTILITY)

A. SS-C: Floor mounted, fabricated from compression molded resin material with integral drain connection. Integral molded self-draining faucet ledge and 4 in. centered faucet holes.

1. Overall nominal outside dimensions at top of tub 23 in. by 23 in. by 13 in. tub depth. Nominal 20-gallon capacity.
2. 4 angular steel legs with levelers.
3. Acceptable manufacturers and models:
   a. The Swan Corporation Model MF-1F.
   b. E.L. Mustee and Sons Model 17F

SPEC EDITOR: USE FAUCET SF-A WITH COUNTERTOP SINK-A AND B. COULD ALSO BE USED WITH SINK-D.

2.23 SF-A SINK FAUCET (SWING GOOSENECK W/SIDE SPRAY)

A. SF-A Faucet: Polished chrome plated brass valves, spout, handles, aerator. Concealed (under-mount) body. ADA compliant. With trim.

1. Faucet, supplies, and stops shall be NSF/ANSI-61-G listed as ≤ 0.25% weighted average lead content.
2. Gooseneck swing spout with side spray.
3. 8" minimum center of body to spout center. Minimum 12" high spout.
4. Lever style handles, with hot and cold color indicators and vandal resistant mounting screws.
5. 8" rigid valve body centers (flexible tubing connections between valves and spout not allowed).
6. With aerator, maximum flow rate of 2.2 gpm.
7. Ceramic disc valve cartridges.
8. Trim: Rigid supplies with metal handled stops, tailpiece, P-trap with clean-out, waste to wall, escutcheons; all chrome plated brass. Where concealed, trim under sinks may be unplated brass stops, plastic or rough brass supply tubes, PVC trap, and rough brass escutcheons.

9. Acceptable manufacturers and models:
   a. American Standard "Heritage/Amarilis" with No. 342 lever handles.
   b. Moen "M-Dura"
   c. Chicago Faucets 200 (base/spout) with curved lever handles.

SPEC EDITOR: MORE COMPACT FAUCET SF-B FOR USE WITH SINK-C.

2.24 SF-B SINK FAUCET (SWING GOOSENECK, 4" CENTERS, NO SIDE SPRAY)

A. SF-B Faucet: Polished chrome plated brass valves, spout, handles, aerator. Deck mount. ADA compliant. With trim.

1. Faucet, supplies, and stops shall be NSF/ANSI-61-G listed as ≤ 0.25% weighted average lead content.
2. Gooseneck swing spout.
3. 5" minimum center of body to spout center. Nominal 11" high spout.
4. Lever style handles, with hot and cold color indicators and vandal resistant mounting screws.
5. 4-inch centers.
6. With aerator, maximum flow rate of 2.2 gpm
7. Ceramic disc valve cartridges.
8. Trim: Rigid supplies with metal handled stops, tailpiece, P-trap with clean-out, waste to wall, escutcheons; all chrome plated brass. Where concealed, trim under sinks may be unplated brass stops, plastic or rough brass supply tubes, PVC trap, and rough brass escutcheons.
9. Acceptable manufacturers and models:
   a. American Standard "Heritage/Amarilis" with No. 342 lever handles.
   b. Moen "M-Dura"
   c. Chicago Faucets 895 (base/spout) with lever handles.

SPEC EDITOR: USE SERVICE SINK-FAUCET SSF-A WITH SERVICE SINKS SS-A. SSF-A IS FOR MOUNTING ON VERTICAL SURFACE OF SINK BACK.

2.25 SSF-A SERVICE SINK-FAUCET (SINK WALL MOUNT)

A. SSF-A: Utility Faucet: For mounting on vertical surface of sink back. Rough or polished chrome plated brass body, spout, handles. ADA compliant.

1. Metal lever handles with hot and cold indicators.
2. Compression or ceramic disc valve cartridges.
3. Integral vacuum breaker.
4. 8" centers.
5. Spout with 3/4 in. threaded hose end.
6. 3 ft. hose with one end a 3/4 in. threaded brass conn.
7. Minimum 5" wall-to-spout projection.
8. Acceptable manufacturers and models:
   a. American Standard Model 8350
   b. Chicago Faucets 540.
   c. Zurn AquaSpec Z842L1-RC

SPEC EDITOR: USE SERVICE SINK-FAUCET SSF-B WITH SERVICE SINKS SS-B

2.26 SSF-B SERVICE SINK-FAUCET (WALL MOUNT)

A. SSF-B: Wall-Mount Utility Faucet: Chrome plated brass valves, spout, handles. ADA compliant.

1. Metal lever handles with hot and cold indicators.
2. Ceramic disc valve cartridges.
3. Vacuum breaker.
4. Wall-to-spout brace.
5. Integral check valves to prevent cross-flow.
6. Offset adjustable shanks capable of adjustment to 8" centers.
7. Spout with 3/4 in. threaded hose end and bucket hook.
8. Minimum 9" wall-to-spout projection.
9. Acceptable manufacturers and models:
   a. American Standard Model 8354
   b. Chicago Faucets 540.
   c. Zurn AquaSpec Z843M1-RC

SPEC EDITOR: USE SERVICE SINK-FAUCET SSF-C WITH SERVICE SINK SS-C

2.27 SSF-C SERVICE SINK-FAUCET (4" CENTER DECK MOUNT)

A. SSF-C Deck-Mount Utility Faucet: Chrome plated brass valves, spout, handles. ADA compliant.

1. 4 in. centers.
2. Metal lever handles with hot and cold indicators.
3. Ceramic disc valve cartridges.
4. 6" minimum center of body to spout center.
5. Swivel spout with 3/4 in. threaded hose end and in-line or integral vacuum breaker.
6. Acceptable manufacturers and models:
   a. Chicago 891.
   b. Zurn Z812N1.

2.28 UNDERSINK WASTE AND SUPPLY PIPE GUARDS

SPEC EDITOR: PROVIDE UNDER SINK PROTECTIVE INSULATION FOR ADA COMPLIANT WALL MOUNTED LAVATORIES

A. Provide ADA compliant undercounter protective covers on all supply and waste piping at barrier free lavatories. Covers shall be UV protected PVC, with reusable fastening system. Provide product type designed for the specific piping material over which it will be applied.

1. Acceptable manufacturers and models:
   a. Zurn.
   b. IPS Corporation Truebro.

SPEC EDITOR: CENTRAL DOMESTIC WATER MIXING VALVES ARE NOT INCLUDED IN THIS SPECIFICATION BECAUSE THEY NEED TO BE SELECTED SPECIFICALLY FOR PROJECT CONDITIONS IF THEY ARE TO WORK PROPERLY. IF SUCH A VALVE IS REQUIRED THE DESIGNER SHOULD

CAREFULLY SELECT AN APPROPRIATE MODEL AND ADD IT TO THIS SPECIFICATION.

2.29 THERMOSTATIC MIXING VALVE - HAND WASHING FACILITIES

A. The Michigan Plumbing Code 2009 section 607.1 (2) (h) has been modified by local rule as follows:

1. A ASSE 1070 mixing valve (water temperature limiting device) is permitted to control up to 5 accessible plumbing fixtures within the same room. The ASSE 1070 mixing valve shall be certified for a minimum flow rate of 0.5 gpm or less.

B. Provide a thermostatic mixing valve at all public lavatories including at accessible plumbing fixtures. A maximum of 5 faucets within the same room may be served by 1 mixing valve.

1. At other locations identified in the Michigan Plumbing Code, provide individual water temperature limiting devices (thermostatic mixing valves) to individual fixtures.

C. Provide mixing valves based on the following selection criteria:

1. Mixing valve serving a single fixture: Valve pressure drop shall not exceed 5 psi at 1 gpm flow rate.
2. Mixing valve serving 2-5 fixtures: Valve pressure drop shall not exceed 5 psi at 4.0 gpm flow rate.

D. Mixing valve specification:

1. Manually adjustable thermostatically controlled domestic water tempering valve.
2. ASSE 1070 listed to control down to 0.5 GPM flow rate.
3. All bronze or brass body, rough finish, chrome plated if exposed. Brass and stainless steel internal components.
4. Chloramine resistant seals.
5. Integral check valves and stainless steel strainers (screens) in hot and cold water inlet connections.
6. Tamper resistant temperature adjustment handle.
7. Union with male or female NPT connections, or compression fittings.
8. Valves shall operate properly:
   a. At supply pressures between 20 PSIG and 125 PSIG.
   b. With up to 20 percent pressure differential between hot and cold water supplies.
9. Outlet temperature shall be adjustable to within 10 deg. F of inlet hot water temperature.
10. Hot inlet operating range: 120-180 deg. F.
11. Lower temperature adjustment range: not more than 95 deg. F.
12. Upper temperature adjustment range: not more than 140 deg. F.

E. Acceptable manufacturers and models:

1. Powers Hydroguard.
2. Symmons Maxline.
3. Wilkins Aqua-Gard.

2.30 SHOWER HEADS, SHOWER CONTROL VALVES, AND TRIM

SPEC EDITOR: SELECT SH-A AND/OR SH-B TO SUIT PROJECT

A. SH-A: ADA Shower System: Including chrome plated brass supply ell, wall flange, and 30-inch slide bar. Hand held shower head with shut-off, swivel cradle with adjusting knob, (min.) 69 in. chrome plated stainless steel hose, in line vacuum breaker. Shower head flow rate 2.5 gpm. All components shall be ADA compliant. Shower head shall be compatible with shower control valve range. Acceptable manufacturers:

1. American Standard.
2. Chicago Faucet.
3. Speakman.
4. Symmons.
5. Kohler.

B. SH-B Shower Head: Chrome plated brass shower head, shank, and ball joint. 2.0 GPM flow rate. Spray adjusting side handle. Shower head shall be compatible with shower control valve range. Acceptable manufacturers and models:

1. American Standard.
2. Chicago Faucet.
3. Speakman.
4. Symmons.
5. Kohler.

SPEC EDITOR: U-M HOUSING TYPICALLY USES A SYMMONS MODEL 4-500 "SAFETYMIX" SHOWER CONTROL VALVE IN A SYMMONS "HYDAPIPE" HOUSING. FOR HOUSING PROJECTS VERIFY IF THE AFOREMENTIONED SYMMONS SHOWER ASSEMBLY IS REQUIRED, AND REVISE BELOW ACCORDINGLY.

SPEC EDITOR: HOSPITAL PROJECTS SHALL ONLY EMPLOY COMBINATION BALANCED PRESSURE/THERMOSTATIC SHOWER VALVES, REVISE BELOW ACCORDINGLY.

C. Shower Control Valve (including tub/shower combination valves): Balanced pressure, thermostatic, or combination balanced pressure/thermostatic valve. ADA compliant.

1. Vandal resistant chrome plated brass face plate, single handle, and tub spout (provide 4-port valve, diverter, and spout for bathtub applications).
2. Brass body mixing valve with integral check stops, for concealed piping connections, capable of back-to-back installation.
3. Adjustable limit stop factory set to 110 deg. F (120 deg. F max adjustment).
4. Shall provide anti-scald protection and temperature regulation at inlet pressures as low as 20 psig (flowing), at flows from 1.75-2.5 gpm, at supply temperatures from 40 deg. F to 160 deg. F.
5. Minimum static pressure rating: 125 psig.

D. Acceptable manufacturers and models:

1. American Standard.
2. Chicago Faucet.
3. Speakman.
4. Symmons.

5. Kohler.
6. Powers.

SPEC EDITOR: THE DESIGNER SHALL CONSULT WITH THE U-M DESIGN MANAGER TO DETERMINE IF BOTTLE FILLERS SHOULD BE PROVIDED FOR THE PROJECT, AND IF SO AT WHAT LOCATIONS. BOTTLE FILLERS CAN CONSIST OF GOOSE NECKS ADDED TO WATER COOLERS (OR PROVIDED ELSEWHERE), OR AUTOMATIC BOTTLE FILLING UNITS WITH OR WITHOUT A WATER BUBBLER, NONE OF WHICH ARE SPECIFIED BELOW. THEREFORE IF BOTTLE FILLERS ARE REQUIRED, EDIT THIS SPECIFICATION ACCORDINGLY.

2.31 ELECTRIC WATER COOLERS

A. EWC-A Electric Water Cooler: Vandal-resistant, wall mounted, refrigerated water cooler. ADA compliant.

1. 14 gauge satin-finish stainless steel vented cabinet and integral basin, with removable access panel.
2. Self-closing button operated. Polished chrome-plated bubbler head with flow adjustment. In-line removable strainer.
3. Cooling System: Integral to water cooler. Insulated stainless steel evaporator tank. Copper tube/aluminum fin condenser. Non-CFC/HCFC refrigerant. Adjustable thermostat. 115V/1Ph/60Hz. UL listed.
4. Delivers a minimum of 8 gph of water at 50 deg. F, cooled from 80 deg. F inlet water, at 90 deg. F, ambient.
5. Certified to NSF/ANSI 61-G.
6. Acceptable manufacturers and models:
   a. Halsey-Taylor "HVRHD" Series.
   b. Haws Model "H" Series.
   c. Oasis International "PG" Series.

B. EWC-B Electric Water Cooler: Bi Level, vandal-resistant, wall mounted, refrigerated water cooler. ADA compliant.

1. 14 gauge satin-finish stainless steel vented cabinet and integral basin, with removable access panel.
2. Self-closing button operated. Polished chrome-plated bubbler head with flow adjustment. In-line removable strainer.
3. Cooling System: Integral to water cooler. Insulated stainless steel evaporator tank. Copper tube/aluminum fin condenser. Non-CFC/HCFC refrigerant. Adjustable, accessible thermostat. 115V/1Ph/60Hz. UL listed.
4. Delivers a minimum of 8 gph of water at 50 deg. F, cooled from 80 deg. F inlet water, at 90 deg. F, ambient.
5. Certified to NSF/ANSI 61-G.
6. Acceptable manufacturers and models:
   a. Halsey-Taylor "HVRHD" Series.
   b. Haws Model "H" Series.
   c. Oasis International Model "PG" Series.

SPEC EDITOR: EMERGENCY FIXTURES SPECIFICATION MUST BE MODIFIED TO BE PROJECT SPECIFIC. BELOW SPEC.S COVER SOME COMMONLY USED TYPES.

2.32 EMERGENCY FIXTURES

SPEC EDITOR: THE PLUMBING CODE REQUIRES THAT TEPID WATER BE DELIVERED TO EMERGENCY FIXTURES. THE BELOW ARTICLE CALLS FOR A DEDICATED TEMPERING VALVE PER EMERGENCY FIXTURE, WHICH MAY NOT BE COST EFFECTIVE FOR EVERY PROJECT. DESIGNER SHALL CAREFULLY EVALUATE TEMPERING VALVE OPTIONS AND REVISE THE BELOW ACCORDINGLY. DESIGNER IS CAUTIONED IN PARTICULAR TO EVALUATE PRESSURE DROP ACROSS THE TEMPERING VALVE.

SPEC EDITOR: PLASTIC BOWLS, EYE WASH HEADS, AND SHOWER HEADS CAN SAVE CONSIDERABLE COST BUT MAY BE MORE SUSCEPTIBLE TO BREAKAGE AND BACTERIAL GROWTH, EVEN WITH ANTIMICROBIAL PROTECTION. BELOW EYEWASH/SHOWERS ARE SPECIFIED WITH THESE PARTS IN TRADITIONAL STAINLESS STEEL OR CHROME PLATED, FOR CLEANLINESS AND DURABILITY.

SPEC EDITOR: MULTIPLE SWING ARRANGEMENTS ARE AVAILABLE FOR EYE WASH COUNTERTOP MODELS, THEREFORE MODEL NUMBERS ARE NOT PROVIDED BELOW. REVISE THE BELOW TO SPECIFY THE SPECIFIC MFR.S MODEL NUMBERS THAT WILL ACCOMMODATE YOUR PROJECT'S MOUNTING LOCATION(S).

A. EEWS-A Emergency Eye Wash: Countertop mounted. Swing away when not in use. ANSI Z358.1-2009 compliant. Provide swing arrangement that accommodates mounting location. Barrier Free.

1. Stainless steel or chrome plated brass eye wash head(s) with tethered dust cover(s) and auto-flow control.
2. Chrome-plated brass pipe, fittings, deck escutcheon, and stay-open ball valve, with stainless steel ball and stem.
3. Universal emergency sign mounted on stainless steel ball valve paddle.
4. Test card to record weekly checks.
5. Emergency Fixture Tempering Valve.
6. Acceptable manufacturers and models:
   a. Haws.
   b. Bradley
   c. Speakman.

B. EEWS-B Emergency Eye/Face Wash: Pedestal mounted, self-supporting. ANSI Z358.1-2009 compliant. Barrier Free.

1. Stainless steel or chrome plated brass combination eye and face wash head(s) with tethered dust cover(s) and auto-flow control.
2. Chrome-plated brass fittings and stay-open ball valve, with stainless steel ball and stem.
3. Universal emergency sign mounted on stainless steel ball valve paddle.
4. Stainless steel bowl.
5. In-line strainer.
6. 1-1/4 in. sch. 40 hot-dipped galvanized steel pipe stand/waste tee and cast-iron floor flange. Stand and floor flange painted/powder coated.
7. Test card to record weekly checks.
8. Emergency Fixture Tempering Valve.
9. Acceptable manufacturers and models:

a. Haws.
b. Bradley.
c. Speakman.

SPEC EDITOR: BELOW FLUSH CEILING-MOUNTED DRENCH SHOWER IS SPECIFIED W/SS SHOWER (AS OPPOSED TO PLASTIC) AND PULL ROD BASED ON THE ASSUMPTION THAT THIS TYPE SHOWER WAS SPECIFIED FOR AESTHETIC REASONS.

C. EEWS-C Emergency Shower: Drench shower, flush ceiling-mounted shower head with concealed horizontal supply pipe and valve. ANSI Z358.1-2009 compliant. Barrier Free.

1. Stainless steel shower head with 20 gpm flow control.
2. Stainless steel or brass stay-open ball valve, with stainless steel ball and stem. .
3. Stainless steel triangular pull rod; provide length required to meet ANSI Z358.1 69" maximum distance to floor requirement.
4. Pull rod ceiling escutcheon.
5. 1.0 in. sch. 40 galvanized steel supply pipe/fittings.
6. Universal emergency sign and weekly test card.
7. Emergency Fixture Tempering Valve.
8. Acceptable manufacturers:
   a. Haws
   b. Bradley.
   c. Speakman.

D. EEWS-D Emergency Shower/Eye-Face Wash: Combination shower eye/face wash, self-supporting. ANSI Z358.1-2009 compliant. Barrier Free.

1. Stainless steel or chrome plated brass combination eye and face wash head(s) with tethered dust cover(s) and auto-flow control. Operated by stainless steel paddle with universal emergency sign.
2. Stay-open stainless steel or chrome plated brass ball valve, with stainless steel ball and stem, for eye/face wash and for shower.
3. Stainless steel bowl.
4. In-line strainer for eye/face wash.
5. 1-1/4 in. sch. 40 hot-dipped galvanized steel pipe stand/waste tee and cast floor flange. Stand and floor flange painted/powder coated.

SPEC EDITOR: COMBINATION SHOWER/EYE-FACE WASH UNITS ARE AVAILABLE WITH DRAIN AND SUPPLY CONNECTIONS LOCATED AT VARIOUS ELEVATIONS. EDIT THE BELOW TO PROVIDE CONNECTIONS SUITABLE FOR YOUR PROJECT.

6. Low waste connection, supply connection to be tee at top of pipe stand.
7. Universal shower emergency sign and weekly test card.
8. Stainless steel shower head with 20 gpm flow control.
9. Stainless steel or aluminum triangular pull rod; provide length required to meet ANSI Z358.1 69" maximum distance to floor requirement.
10. Emergency Fixture Tempering Valve.
11. Acceptable manufacturers and models:
    a. Haws.

b. Bradley.
c. Speakman.

SPEC EDITOR: TEMPERING VALVE CONSIDERATIONS: LOCATION? MOUNTING CABINET? ONE TEMPERING VALVE TO SERVE MULTIPLE FIXTURES? IS THERE ADEQUATE WATER SUPPLY PRESSURE FOR TEMPERING VALVE AND FIXTURE PRESSURE DROP?

E. Emergency Fixture Tempering Valve: ANSI Z358.1-2009 compliant and ASSE 1071 listed emergency fixture tempering valve. Provide one tempering valve per emergency fixture. Cold water bypass when hot supply lost; shut-off of hot supply when cold supply lost; shut off hot and allow cold flow if thermal actuator fails.

1. Select valve to control accurately across the entire flow range of the emergency fixture. Tempering valve pressure drop shall not exceed 10 PSI at the emergency fixture's maximum flow rate.
2. Tamper resistant temperature adjustment, range 65 deg. F to 95 deg. F, factory set at 85 deg. F.
3. Rough bronze finish. Brass and stainless steel internal components.
4. Chloramine resistant seals.
5. Integral check valves and stainless steel strainers (screens) in hot and cold water inlet connections.
6. Provide thermometer to measure the mixed temperature, range 0-140 deg. F. Thermometer may be integral to tempering valve or field supplied.
7. Approved manufacturers:
   a. Haws
   b. Bradley
   c. Powers Hydroguard XP
   d. Leonard Valve Company

SPEC EDITOR: THE BELOW EMERGENCY FIXTURE ALARM SPECIFICATION (IN HIDDEN TEXT) IS A SAMPLE SPECIFICATION ONLY. TURN ON TEXT IF USED. TYPICALLY AT U-M, EMERGENCY FIXTURE ALARMS ARE ONLY USED FOR SHOWERS IN AREAS HIGHLY PRONE TO VANDALISM. HAWS, BRADLEY, AND SPEAKMAN ALL MAKE ALARM PACKAGES WITH THE FEATURES DESCRIBED BELOW. DESIGN CONSIDERATIONS: LOCATION OF THE HORN/LIGHT? IS ADEQUATE FLOW-SWITCH-TO-ALARM CABLE LENGTH AVAILABLE FROM THE MFR? HORN/LIGHT MOUNTED TO WHAT? DOME COLOR? REMOTE MONITORING? FOR EYEWASHES, SHOWERS, OR BOTH?

F. Emergency Fixture Alarm System: Complete stand-alone alarm system with flow switch, horn, and flashing light or strobe. For non-hazardous locations.

1. 120 VAC single phase. UL listed electrical components. On-off horn silence switch. NEMA 3R rated electrical components. Factory pre-wired flow switch, silence switch, horn, and flashing light/strobe. Provide adequate cable length between flow switch and alarm devices to accommodate installation conditions.
2. Amber light dome.
3. Horn volume 85 dB at 10 feet.
4. Additional alarm contact for remote monitoring.

5. Vapor proof flow switch. Provide flow switch compatible with emergency fixture served.
6. Approved manufacturers:
   a. Haws
   b. Bradley
   c. Speakman

2.33 GD-A - GARBAGE DISPOSAL

A. GD-A Garbage Disposal:

1. Corrosion proof polymer or stainless steel hopper and grinding chamber.
2. Compact shell, 14 in. maximum overall height. Sound insulated.
3. Stainless steel grind ring, swivel impellers, and turntable.
4. Motor: 3/4 HP, 120V single phase permanently lubricated. Built-in overload protection with manual reset.
5. Stainless steel 3-bolt sink flange connection, stainless steel stopper, and dishwasher drain connection.
6. For operation with wall switch (continuous feed).
7. Acceptable manufacturers and models:
   a. Insinkerator Evolution Compact Series.
   b. Waste King Legend 9940.

2.34 WASHING MACHINE VALVE BOX

A. ABS plastic outlet box and trim ring and with supply and drainage connections. Box shall allow piping from bottom or top. With separate quarter turn ball valve for each supply connection. Ball valves shall be brass body, 1/2 in. sweat inlet connection, stainless steel ball and stem, with 3/4 in. hose bib. Provide dual drain "Du-All" box or a separate supply and drain box "Ox Box" as convenient for installation. Provide fire rated outlet boxes when required.

1. Approved manufacturers:
   a. IPS Corporation ("Du-All")
   b. Sioux Chief ("Ox Box" and fire rated)

2.35 ACCESSORIES

A. Supply Tubes, Stop Valves, and Escutcheons for Faucets: Sweat, threaded or compression connection. Rigid supplies. Metal handled valves. Valves and escutcheons chrome plated brass where exposed, may be rough brass where concealed. Supply tubes chrome plated brass where exposed, may be rough brass or plastic where concealed. Brass tubes and valves NSF/ANSI-61-G listed as ≤ 0.25% weighted average lead content. Acceptable manufacturers:

1. Watts
2. Chicago.
3. BrassCraft.
4. Faucet manufacturer.

PART 3 - EXECUTION

3.1 EXAMINATION AND PREPARATION

A. Examine roughing-in of water supply and sanitary drainage and vent piping systems to verify actual locations of piping connections before fixture installation. Verify that walls and floor finishes are prepared and ready for installation of fixtures.

B. Review millwork/casework shop drawings. Confirm location and size of fixtures and openings before rough-in and installation. Confirm that millwork/casework is constructed with adequate provision for the installation of countertop lavatories and sinks.

C. Coordinate cutting and forming of roof and floor construction to receive drains to required invert elevations.

3.2 INSTALLATION OF PLUMBING FIXTURES AND LABORATORY SERVICE OUTLETS - GENERAL

A. Fixtures shall not be used for construction activities. Protect fixtures from damage during construction.

B. Install fixture supports securely to building substrate, utilizing bolts in every mounting hole provided in the fixture support. Provide additional blocking/backing when required.

C. Install Barrier Free water closets, urinals, lavatories, and other devices at mounting heights and with clearances in conformance with the applicable Building Code and ADA requirements.

D. Install supply, vent and drain connections to fixtures full size of fixture connection, unless larger required by code or indicated otherwise on drawings. Provide the following minimum branch piping and connection sizes:

1. Lavatory and Sink Faucets: 1/2 in. branch piping to wall, 3/8 in. connection between wall and fixture, length of each 3/8 in. supply not to exceed 30 in.
2. Wall Hydrants: 3/4 in. branch piping.
3. Fume Hood Cup Sinks: 1/2 in. branch piping.
4. Eye/Face Wash: 3/4 in. branch piping.

E. Install fixtures and fixture carriers level and plumb.

F. Countertop Lavs: Coordinate with architectural trades.

G. Install wall flanges or escutcheons at piping wall penetrations in exposed, finished locations and within cabinets and millwork. Install deep-pattern escutcheons if required to conceal protruding fittings.

H. Install each fixture with trap, easily removable for servicing and cleaning.

I. Provide rigid supply tubes and stops to all lavatories and sinks..

J. Provide accessible ball type isolation valves (construction per Related Section) in the supplies to shower control valves and electric water coolers.

K. Provide accessible ball type isolation valves and spring check valves (construction per Related Section) in the supplies to service sink faucets. These check valves are in addition to checks integral to the faucet. Locate isolation valves to isolate faucet and checks.

L. Provide plumbing fixtures complete with supply, waste and vent piping connections; together with all fittings, supports, fastening devices, and valves.

M. Use strap wrenches and padded tools to preclude injury to chrome plated and other decorative surfaces.

N. Exposed to view supply and drainage trim for fixtures and equipment shall be connected to the rough piping systems at the wall, unless noted otherwise.

O. Wall sleeves on supply and drain connections are not required at the immediate connection to plumbing fixtures. Provide escutcheons.

P. For faucets without an included gasket, seal areas between faucet base and sink top with non-hardening plumber's putty.

Q. Seal joints between plumbing fixtures and walls and floors using mildew-resistant 100% silicone sealant. Match sealant color to fixture color. Comply with sealant requirements specified in Division 07 section for Joint Sealants.

R. Install emergency fixture placards at approved location.

3.3 INSTALLATION OF WATER CLOSETS AND URINALS - STANDARD AND BARRIER FREE

SPEC EDITOR: COORDINATE MOUNTING HEIGHTS WITH ARCHITECTURAL DRAWINGS

A. Mounting Heights:

1. Water closets - standard: 15 in. to 17 in. from top of toilet seat to finished floor.
2. Water closets - barrier free: 17 in. from top of toilet seat to finished floor.
3. Urinals- standard: 24 in. from rim to finished floor.
4. Urinals - barrier free: 17 in. from rim to finished floor, 44 in. maximum from hand operated flush valve to finished floor.
5. Flush Valve: Mount flush valve handle on wide side of stall or room.
6.

B. Apply dual flush instruction plates to wall centered above flushometer.

C. Install toilet seats on water closets.

3.4 INSTALLATION OF FIXTURES IN CASEWORK AND FUME HOODS

SPEC EDITOR: BACKFLOW PREVENTER MAY BE REQUIRED - SPECIFY IN 221119 DOMESTIC WATER SPECIALTIES

A. Fixtures (including tailpiece) and outlets to be installed in casework and fume hoods shall be furnished by others and installed by this contractor as part of the work under this section. Contractor shall install fixtures and outlets complete including all piping, supports, stops, etc. Contractor shall provide rough-in and shall make all final connections. Contractor shall coordinate his work with fume hood and casework manufacturers and with all other trades. Refer to Related Sections Laboratory Casework and Laboratory Fume Hoods. Refer to Architectural drawings for location and quantities of outlets and fixtures and for piping details within fume hoods.

3.5 INSTALLATION OF THERMOSTATIC MIXING VALVES (NON-EMERGENCY FIXTURES)

A. Install in a location readily accessible for cleaning, adjustment, and valve/cartridge replacement.

B. Install mixing valve after checks and stops are installed. Thoroughly flush all piping immediately prior to mixing valve installation.

C. Install isolation valves on the hot and cold water inlet pipe connections, near the mixing valve.

D. Install check valves between the mixing valve and the mixing valve isolation valves. These check valves are in addition to the mixing valve's integral check valves.

E. Adjust valve temperature set point to 110 deg. F, following manufacturer's adjustment instructions.

3.6 INSTALLATION OF EMERGENCY FIXTURE TEMPERING VALVES

A. Install in a location readily accessible for cleaning, adjustment, and valve/cartridge replacement.

B. Install tempering valve after checks and stops are installed. Thoroughly flush all piping immediately prior to tempering valve installation.

C. Install isolation valves on the hot and cold water inlet pipe connections, near the mixing valve.

D. Install check valves between the mixing valve and the mixing valve isolation valves. These check valves are in addition to the tempering valve's integral check valves.

E. Install individual fixture tempering valves a maximum of 10 feet from the emergency fixture served, closer if recommended by the manufacturer.

F. Install a downstream thermometer with a range of 0-140 deg. F, to measure the mixed temperature. Not required if tempering valve is supplied with an integral thermometer.

G. Remove isolation valve handles.

H. Adjust valve temperature set point to 85 deg. F +/- 3 deg. F, or as indicated on drawings. Follow manufacturer's adjustment instructions.

3.7 COMMISSIONING

A. Perform the commissioning activities as outlined in the Division 01 Section for Commissioning and other requirements of the Contract Documents.

3.8 ADJUSTING AND CLEANING

A. Flush all water closets and urinals and verify performance. Adjust or clean flush valves to produce proper flow.

B. Back-flush shower heads, faucet aerators/spray heads, and in-line strainers at electric water coolers, emergency fixtures, and wherever installed, and reinstall.

C. Adjust pop-up drains for proper operation.

D. Adjust eyewashes to provide proper flow.

E. Adjust shower control valve limit stops to deliver maximum 120 deg. water.

F. Adjust stops or valves for intended water flow rate to fixtures without splashing, noise or overflow.

G. Replace dead batteries in sensor operated flush valves and faucets. Adjust sensor operation to satisfaction of commissioner.

H. At completion of project, remove excess caulk and sealants and clean plumbing fixtures and equipment.

END OF SECTION 224200

UNIVERSITY OF MICHIGAN
ARCHITECTURE, ENGINEERING AND CONSTRUCTION

ARCHITECTURE & ENGINEERING
326 East Hoover, Mail Stop B
Ann Arbor, MI 48109-1002
Phone: 734-764-3414
Fax: 734-936-3334

BuildingName
The Description of the Project
P00000000 0000

SPECIFICATION DIVISION 22

NUMBER SECTION DESCRIPTION

DIVISION 22 PLUMBING
SECTION 226313 – MEDICAL GAS CERTIFICATION (FOR HOSPITAL FUNDED PROJECTS)

END OF CONTENTS TABLE

DIVISION 22 PLUMBING
SECTION 226313 – MEDICAL GAS CERTIFICATION (FOR HOSPITAL FUNDED PROJECTS)

PART 1 - GENERAL

1.1 RELATED DOCUMENTS

A. Drawings and general provisions of the Contract, Standard General and Supplementary General Conditions, Division 1 Specification Sections, and other applicable Specification Sections including the Related Sections listed below, apply to this Section.

B. Related Sections:

1. Section 018113: Sustainable Design Requirements.
2. Section 019110/019100: Commissioning
3. Section 220500 Common Work Results for Mechanical
4. Section 221113 Piping Materials and Methods
5. Section **XXXXXX** Medical Gas Systems

1.2 SUMMARY

A. Perform certification of all medical gas/ vacuum installations in conformance with NFPA 99C.

B. Certification services will be a direct contract between UM and the certification contractor and should not be included in the contractor's bid. Contractor shall be responsible for coordination of and with the certification contractor's services. The information expressed in this specification is for contractor information purposes only.

C. Section Includes:

1. Owner approved medical gas certification companies
2. Certifiers scope of services

1.3 REFERENCES

A. Definitions

1. Portable Document Format (PDF): An open standard file format licensed by Adobe Systems used for representing documents in a device-independent and display resolution-independent fixed-layout document format.

1.4 SUBMITTALS

A. Documentation:

1. Certification reports in conformance with NFPA 99C
   a. Submit to the State of Michigan Health Facilities Evaluation Section at the completion of each project phase. All submittals shall be conducted thru the UM Project Manager.
   b. Final, approved reports shall be delivered in hard copy and electronic Adobe Acrobat pdf form to the UMH Plumbing Shop Foreman at the completion of each project phase.

2. Medical gas as-built drawings
   a. Medical gas as-builts shall be uploaded in electronic Adobe Acrobat pdf form to the UMH Facilities Planning & Development website:
   b. http://www.med.umich.edu/facilities/plan/vn/

B. All Submittals: Identify and incorporate information in each submittal as follows:

1. Assemble complete submittal package per project into a single indexed file. Report hard copies shall be bound and compiled in an orderly fashion. Report electronic copies shall be saved and complied as a single pdf file.
2. Submitted documents shall be FINAL, APPROVED reports and as-builts. Partial, preliminary reports or reports identifying outstanding issues of non-compliance should not be submitted to UMHHC. Prior to submitting FINAL reports, all outstanding issues and/or code deficiencies shall be resolved and re-certified.

C. Electronic Submittals: File name shall use project identifier (UMH project RTN number) and project name followed by a description of the file contents. An example of a file name:

1. RTN 1234567 Emergency Dept Expansion- FINAL Med Gas Certification Report.pdf
2. RTN 1234567 Emergency Dept Expansion- FINAL Med Gas As-Built.pdf

1.5 QUALITY ASSURANCE

A. Reference Standards: Services described in this section shall be in compliance with the following quality assurance standards; latest editions, unless noted otherwise.

1. NFPA 99C, "Standard for Health Care Facilities", 2005 edition

B. All medical gas certification services shall be conducted under the direct supervision of an ASSE 6020 certified inspector and ASSE 6030 certified verifier.

C. All medical gas certifications required under a given project shall be conducted by a single certification company.

D. Coordinate testing and inspections with the University of Michigan mechanical inspector, UM project manager and UMH plumbing shop.

1.6 ACCEPTABLE CERTIFICATION CONTRACTORS

A. Acceptable Medical Gas Certification Service Providers:

1. Diamond Medical Services (Rob Rawlings)
2. ~~Pneumatic Medical, Au Gres, MI~~Gassy Girl (Matt Bussinger)

PART 2 - PRODUCTS

2.1 NOT APPLICABLE

PART 3 - EXECUTION

3.1 GENERAL SERVICE REQUIREMENTS:

A. Inspection and testing shall be performed on all new piped gas systems, additions, renovations, temporary installations, or repaired systems to assure the facility, by a documented procedure, that all applicable provisions of NFPA 99C have been adhered to and system integrity has been achieved and/or maintained.

B. The verifier will check all source equipment, piping distribution, valving, outlets & inlets and labeling for form, function and conformance. All alarm systems shall be tested for set points, signals, and pressures monitored. Piping systems are to be tested for purity, free of both gaseous and particulate contaminants.

C. The duties of the medical gas certifier shall include:

1. Coordination with project manager and project phasing in order to avoid delays in the project schedule. Certifications shall be conducted, certified and submitted for each phase of construction.
2. Coordination with the project's UM mechanical inspector to ensure that medical gas installations are certified prior to mechanical inspection.
3. Alerting UM Project Manager of any errors or violations that may impact project budget or schedule.

D. If deficiencies are found, the certifier shall summarize in a deficiency report issued thru the UM Project Manager. The mechanical contractor shall make corrections as required and coordinate with the certification contractor for re-certifying the installation.

3.2 CERTIFICATION REPORT:

A. The verifier is to inspect, test, and develop a document that proves that the installation meets all current code requirements and that it is safe and ready for patient use.

B. Submit reports in conformance with NFPA 99C, specifications and the requirements listed below.

C. Reports shall be signed by a licensed ASSE 6030 certifier.

D. Reports shall be bound and include UM/ UMH project numbers (ie UM AEC Project # and UMH FPD RTN #) and project name (from project construction documents) clearly labeled on the cover sheet.

E. Report shall include a list of all deficiencies, corrections made and final re-certification results. Reports shall not be submitted with outstanding, unresolved deficiencies within the scope of work.

3.3 MEDICAL GAS AS-BUILTS

A. The University of Michigan Hospitals & Health Centers Facilities Planning & Development (UMHHC FPD) maintains a web-based, digital record drawing of all medical gas/ vacuum systems in use in UMHHC facilities. Access to viewing, printing and downloading the current medical gas as-built as well as uploading proposed changes to these documents is controlled thru a secure log-in thru the UMH FPD website:

1. http://www.med.umich.edu/facilities/plan/vn/

B. At the completion of the medical gas certifier's services, the certifier shall be responsible for generating an as-built of all source equipment, piping distributions, isolation valves, alarms and outlets/ inlets modified and/ or added in the scope of the project.

C. The certification contractor shall be responsible for uploading the project medical gas as-built to the UMHHC FPD website to aid in the upkeep of accurate medical gas as-builts.

D. Submitted as-builts will be incorporated into the hospital's master record drawings and re-posted to UMHHC FPD's website.

3.4 COMMISSIONING

A. Perform commissioning activities in accordance with Related Sections.

END OF SECTION 226313

UNIVERSITY OF MICHIGAN
ARCHITECTURE, ENGINEERING AND CONSTRUCTION

ARCHITECTURE & ENGINEERING
326 East Hoover, Mail Stop B
Ann Arbor, MI 48109-1002
Phone: 734-764-3414
Fax: 734-936-3334

BuildingName
The Description of the Project
P00000000 0000

SPECIFICATION DIVISION 23

NUMBER SECTION DESCRIPTION

DIVISION 23
SECTION 230593 - TESTING, ADJUSTING AND BALANCING (TAB)

END OF CONTENTS TABLE

DIVISION 23 HEATING, VENTILATING AND AIR CONDITIONING (HVAC)
SECTION 230593 - TESTING, ADJUSTING AND BALANCING (TAB)

REVISIONS:
10-12-00: SUBSTANTIALLY REVISED, APPROVED AS NEW MASTER

REVISED FOR HVAC MECH TECH TEAM BY D. KARLE, AUGUST 2008.

ADDED GAS CABINET BALANCE INSTRUCTIONS TO ARTICLE 3.8 (WORDING DUPLICATES MMC) D. KARLE NOVEMBER 2010.

ADDED (ARTICLE 3.8) THAT ALL ADJUSTMENTS TO LAB TERMINAL AIRFLOW UNITS ARE TO BE DONE BY THE LABORATORY CONTROLS CONTRACTOR, NOT THE TAB CONTRACTOR. D. KARLE, DECEMBER 2013.

ADDED 230910 AND 230920 AS RELATED SECTIONS. ADDED IN ARTICLE 3.8 TO VERIFY LTAU AIR FLOWS AT DESIGN MIN. AND MAX CFM. D. KARLE FOR HVAC MTT JUNE 2015.

AUGUST 2015: ADDED REQUIREMENT TO LABEL CHILLED BEAMS. ADDED REQUIREMENT TO VERIFY PURGE VOLUMES AND CROSS LEAKAGE OF AIR TO AIR HEAT EXCHANGERS. D. KARLE FOR HVAC MTT.

AUGUST 2017: ADDED REQUIREMENT FOR I.D. LABELS ON CEILING NEAR VAV BOXES PER PLUMBING MTT DUE TO REQUEST BY HOSPITAL FPD. D. KARLE.

PART 1 - GENERAL

1.1 RELATED DOCUMENTS

INCLUDE PARAGRAPH 1.1.A AND B IN EVERY SPECIFICATION SECTION. EDIT RELATED SECTIONS 1.1.B TO MAKE IT PROJECT SPECIFIC.

A. Drawings and general provisions of the Contract, Standard General and Supplementary General Conditions, Division 1 Specification Sections, and other applicable Specification Sections including the Related Sections listed below, apply to this Section.

B. Related Sections

1. Section 230910: Laboratory Air Flow Controls - DDC
2. Section 230920: Laboratory Air Flow Controls - Analog

1.2 SCOPE OF WORK:

EDITOR: EDIT SCOPE CAREFULLY. CONSIDER OTHER SYSTEMS THAT MAY REQUIRE TAB WORK, SUCH AS PROCESS COOLING WATER SYSTEMS AND RODI SYSTEMS, AND ADD TO THIS SCOPE OF WORK SECTION. ALSO CONSIDER IF TAB DATA SHOULD BE TAKEN ON EXISTING SYSTEMS PRIOR TO NEW CONSTRUCTION. WHILE THIS SPECIFICATION IS INTENDED TO COVER GENERAL TESTS ASSOCIATED WITH FUME HOOD TESTING SUCH AS FACE VELOCITY READINGS, IT DOES NOT COVER ASHRAE 110 TESTING.

A. Adjust and balance the following systems:

1. Supply air systems
2. Return air systems
3. Exhaust air systems
4. Hydronic systems
5. Domestic hot water systems

B. Conduct the following systems testing:

1. Sound testing
2. Vibration testing
3. Fume hood testing

EDITOR: PERFORMANCE TESTING IS EXPENSIVE AND DIFFICULT TO ACCOMPLISH IN MOST CASES, AND IS THEREFORE NOT USUALLY SPECIFIED. FOR CRITICAL SYSTEMS, CONSIDER FACTORY TESTING RATHER THAN FIELD PERFORMANCE TESTING.

4. Equipment Performance Testing for the following equipment: (none)

C. Hydronic Balancing shall include as a minimum all devices for which a GPM is indicated in the plans, schedules or specifications.

D. Air Balancing shall include as a minimum all devices for which a CFM is indicated in the plans, schedules or specifications.

E. Testing, Adjusting and Balancing Reports, as detailed in part 3.

1.3 QUALITY ASSURANCE:

A. The Contractor shall obtain the services of an independent (third party) Test, Adjust and Balance (TAB) Contractor.

B. Air balance and water balance shall be done by the same Test and Balance Contractor.

C. Testing and balancing shall be performed in accordance with standards of either AABC ("National Standards for Field Measurement and Instrumentation - Total System Balance", Current Volume and Supplements,) or NEBB ("Procedural Standards for Testing, Adjusting and Balancing of Environmental Systems"), and ASHRAE Standard 111-1988.

D. The TAB supervisor shall be currently certified under the requirements of either NEBB or AABC, and shall directly supervise the project TAB activities. Supervisors shall be certified in all areas germane to the project's work scope: air, hydronic, fume hood and sound/vibration testing. Sound and vibration testing may be subcontracted to other qualified firms as approved by the Engineer.

E. Test equipment accuracies shall be no less than recommended by NEBB or AABC; provide higher accuracy test equipment if dictated by project needs. Test equipment shall have been calibrated within the time intervals recommended by NEBB or AABC, but in all cases shall have been calibrated within the last year.

1.4 ACCEPTABLE BALANCING CONTRACTORS:

A. The following are the only acceptable balancing companies:

1. Absolut Balance

2. Air Flow Testing
3. Enviro-Aire/ Total Balance, Inc.

1.5 SUBMITTALS

A. Provide the following for approval:

1. Test instrument list including the following information:
   a. Instrument type and accuracy
   b. Instrument manufacturer and model number
   c. Instrument serial number
   d. Copy of current calibration certificate
2. Proof of TAB supervisor certification.
3. Resume of the TAB supervisor and of all TAB technicians proposed for the project.
4. Proposed reporting forms for each TAB procedure.

1.6 SEQUENCING AND SCHEDULING:

A. Where performance testing is specified, equipment and systems must be tested under conditions that are near design conditions. Various components and systems shall be tested in summer or winter design conditions to accurately reflect specified conditions.

1.7 WARRANTY:

A. For a period of 90 days after the acceptance of the balancing report, the TAB contractor shall recheck or reset any part of any system to meet the Owner's needs, where these variations are within the capabilities of the equipment.

PART 2 - PRODUCTS

2.1 NOT APPLICABLE.

PART 3 - EXECUTION:

3.1 PREPARATION

A. Pre-Balancing Conference: Prior to the pre-balance conference, inspect system readiness for testing, adjusting, and balancing (TAB). Prepare and submit a list of system deficiencies. Afterwards, meet with the Project Engineer, Commissioner and contractors to resolve system deficiencies, to verify TAB procedures and system readiness for TAB, and to coordinate TAB activities and schedule.

B. Coordinate testing, adjusting and balancing of fume hood exhaust systems with U-M OSEH.

C. Phased Construction: Coordinate TAB procedures with any phased construction requirements for the project so that usable increments of finished work may be accepted for beneficial occupancy. Systems serving partially occupied phases of the project may require balancing for each phase prior to final balancing.

D. Scheduling: Identify to the contractor anticipated durations for TAB work, and what items must be complete prior to proceeding with TAB work. Allow sufficient time in the construction schedule for TAB prior to final project inspection.

E. Conduct final TAB after system has been completed and is in full working order. Prior to completing balancing, inspect and test systems and components to verify proper installation and operation, including but not be limited to:

1. Verify strainers and filters are installed and clean.
2. Verify motor and equipment rotation, lubrication and alignment.
3. Align belts and pulleys. Adjust tension.
4. Check operation of all automatic valves and dampers.
5. Check position of isolation valves and dampers.
6. Verify air has been vented from hydronic systems.

F. In cooperation with other contractors, correct deficiencies.

3.2 TESTING, ADJUSTING AND BALANCING - GENERAL REQUIREMENTS:

A. Notify Commissioner and / or University Project Engineer when testing and balancing activities are commencing.

B. Immediately notify the Commissioner and University Project Engineer when any deficiencies are detected, whether associated with design, installation, or equipment.

C. Properly repair any damage to mechanical systems resulting from TAB procedures, e.g. patch duct test holes, repair pipe insulation, etc.

D. TAB contractor shall provide all required tools and equipment necessary to perform TAB services. Take measurements with certified and calibrated devices. Do not use field installed sensors and gauges.

1. Exception: Magnetic flow meters may be utilized for flow measurements when available. However, the TAB contractor shall make secondary checks such as pump pressure readings and shall indicate the results of those tests in the TAB report.

E. Take air and hydronic measurements on equipment at the same time, e.g. take air handler coil water flow data at the same time as air handler air side data.

F. Measure the total air and water flow rate of each system and each major system component.

G. Coordinate work with the building controls contractor(s).

H. Measure motor and equipment speed (RPM) with strobe tachometer. Record full load and part load slippage, and calculate motor brake horsepower (BHP) using BHP= nameplate HP x (part load slip / full load slip).

3.3 AIR BALANCING - GENERAL REQUIREMENTS:

A. Place systems in operation with filters installed and control systems complete and operating. Temporarily block filters to simulate dirty filter pressure drop (obtain dirty filter pressure drop from drawing schedules. If not stated, contact design engineer to obtain). Balance systems to design ratings. Adjust each air terminal unit, inlet and outlet within plus or minus 10 percent of design requirements, but total air for each system shall be not less than shown.

B. Check flow rates for all factory set air terminal units and reset if not correct.

C. Adjust fan speeds by adjusting or replacing sheaves and belts. If replacement is required, follow project change order procedures and obtain authorization prior to proceeding.

D. Set supply fan static pressure as low as practicable while maintaining required pressure at the most aerodynamically remote terminal units.

E. Record pressure drop readings across all major system components and significant drops within duct systems.

F. Verify the calibration of air flow measuring stations by taking traverse readings across associated ducts.

G. For fans equipped with variable speed drives, set the drive to 60 hertz and measure motor and fan RPM to validate that, at the maximum drive speed setting, the fan rotates at the maximum design fan speed. The maximum design fan speed shall be as indicated on the approved fan curve. Assure that running the fan at maximum design speed will not cause any damage prior to making this test.

H. Label all diffusers, chilled beams, registers and grilles with clear plastic adhesive labels indicating air flow rate, terminal unit number and outlet number corresponding to the balance report. Similarly label VAV boxes with terminal unit number and min./max. CFM, affixing label to ceiling grid or access panel at box location. Use nominal 3/16” high black block-style font.

3.4 AIR BALANCING - CONSTANT VOLUME SYSTEMS:

A. Adjust fan speed to minimize wasted horsepower and noise at throttled balancing dampers.

B. Verify each CAV box or zone for proper control: normally open or normally closed position, and type of control.

3.5 AIR BALANCING - VARIABLE VOLUME SYSTEMS (INCLUDING CAV AND VAV BOXES):

A. Balance systems to minimize throttling loses and to optimize (reduce to lowest possible) end-of-line (E-O-L) differential pressure set points. Prior to beginning balancing, meet with the project Commissioner and agree to the exact procedures to be followed. Set static pressure set points to ensure the most hydraulically remote terminal unit can achieve design flow. Measure flow at each terminal unit individually to verify scheduled design flow is achieved at the lowest possible differential pressure set point. Reset E-O-L set point and re-measure flow at each terminal unit until the lowest E-O-L set point is achieved. For DDC systems, coordinate with DDC programmer to optimize E-O-L set point where the sum of the loads exceeds system capacity, the ratio of capacity/loads is defined as the system diversity factor. Calculate diversity factor and indicate calculated diversity factor in the balance report. Adjust belts and sheaves to achieve design flow. Test maximum equipment capacity with all boxes forced open to design maximum CFM. Document design diversity, actual diversity, E-O-L set point, and fan volume. Show all calculations

B. Verify each VAV box for proper control: normally open or normally closed position, and type of control.

C. Check each individual VAV box for minimum and maximum flow. Calibrate boxes as required to meet design CFMs. For electronically controlled boxes, check and correct correction factor at each box. Coordinate with the DDC programmer.

D. Check supply and return fan tracking and assure compliance with design requirements.

SPEC EDITOR: ROOM PRESSURIZATION VERIFICATION (3.6.A.1) SHOULD BE INCLUDED FOR ALL LABS AND OTHER AREAS WHERE A PRESSURE RELATIONSHIP IS IMPLIED BY CFM DIFFERENTIAL BETWEEN SUPPLY AND EXHAUST. HOWEVER, TRUE ROOM PRESSURIZATION CONTROL (3.6.A.2 AND 3) IS INFREQUENTLY USED, TYPICALLY ONLY FOR ANIMAL ROOMS, CLEAN ROOMS, BIOSAFETY LABS, AND OTHER CRITICAL LABS.

3.6 AIR BALANCING - ROOM PRESSURIZATION VERIFICATION:

A. Perform room pressurization verification on all systems where drawings indicate a pressure relationship between rooms based on a differential in supply, return and exhaust cfm. Test systems in each operational mode (e.g. close fume hood sashes, change room temperature set point, etc.) and verify that correct air flow direction at doorways and correct CFM offset between terminal units is maintained in any mode. Indicate if the room “passed” in the air balance report. In all cases, record room pressurization in cfm differential. Verify that all architectural patching of penetrations has been completed. Conduct final testing and balancing with all doors closed. Coordinate work with Laboratory Controls Contractor.

1. For room pressurization designed with cfm offset:
   a. Balance air flow to all terminal units.

b. Verify the room pressure relationships implied by scheduled cfm. Smoke stick test all rooms and record results.

2. For room pressurization designed with controlled differential pressure offset:
   a. Balance air flow to all terminal units.
   b. Verify room pressure relationships. Document offset achieved in inches w.c. at design set points.
3. For room pressurization systems with adjustable or reversible controls: Verify room pressure relationships with controls set in both the positive and the negative direction. Test at maximum offsets and document offsets achieved in inches w.c. Set at design offset (if indicated) and document offset achieved in inches w.c.
4. For room pressurization designed with visual indicators (Ping-Pong balls or similar devices): Verify correct function of the visual indicators in each operational mode.

3.7 AIR BALANCING - AIR HANDLING EQUIPMENT AND SYSTEMS:

A. Test air handling units, exhaust and return fans, and associated automatic dampers in all modes of operation. Determine the most restrictive operating mode and balance systems in this mode.

B. In addition to values listed in ASHRAE Standard 111-1988, the following shall also be measured and reported:

1. Minimum and maximum outdoor air quantities. (Include setting minimum outside air where applicable.)
2. Power factor or watts for motors larger than 10 HP
3. Component air pressure drops, including across open dampers.

C. Record actual motor amps, volts, and rpm, and fan flow, static pressure and rpm.

D. Check all equipment motors, belts, drives, bearings, filters.

E. Check supply and return fan tracking/offset by traverse duct measurements and validate compliance with design requirements.

F. For new air handling units, fan coils, or any other air handling equipment equipped with a condensate drain: In conjunction with the commissioner, test cooling coil condensate drain and trap performance. Artificially load filters to simulate dirty filter conditions. Verify drain pan does not overflow, and air does not blow by trap.

G. Units equipped with air-to-air heat exchangers: Take measurements up and downstream of heat exchangers and calculate the leakage rate between the supply and exhaust/return sides of the unit to validate that leakage rates do not exceed design values. Measure leakage rates at design air flow volumes (producing corresponding pressure differentials), with filters blocked to simulate dirty filter pressure drop. For rotary heat exchangers, take air flow measurements with rotor rotating at maxumim speed. Take air flow measurements after duct leak testing has successfully passed, as close to units as possible to limit impacts from duct leakage, but at locations that allow accurate measurement.

3.8 AIR BALANCING - LABORATORY SYSTEMS:

EDITOR: THIS ARTICLE CONTAINS ITEMS SPECIFIC TO LAB SYSTEMS. REVIEW AND EDIT CAREFULLY TO ADDRESS PROJECT REQUIREMENTS.

A. Test, adjust and balance laboratory air systems, including all laboratory terminal airflow units, fume hoods, bio-safety cabinets (exhausted, or partially exhausted type), snorkels, chemical cabinets, canopy hoods, etc.

1. All adjustments to Lab Terminal Airflow Units (LTAUs) shall be done by the Laboratory Controls Contractor, not the TAB contractor. TAB contractor shall take flow readings to verify the accuracy of these devices, only.

B. Test supply and exhaust tracking through full system performance range. Record room pressurization in cfm differential. Correlate to room air balancing plan.

1. Verify the LTAU air flow against that reported by the LTAU controller at the following points: design minimum and maximum CFM.
2. Measure differential pressure across the LTAU during each CFM verification measurement.
3. Record air flow measured, air flow reported by LTAU controller, and differential pressure across the LTAU, for each verification point. In heavy black permanent marker, mark this data on the LTAU near the mfr.'s data.

C. Fume Hoods: In conjunction with U-M OSEH and the laboratory air flow controls contractor:

1. Adjust the fume hood terminal air flow unit to achieve the design fume hood face velocity with the sash set at the sash stop position.
2. Measure the face velocity at sash stop position and at the fully open sash position.
3. Verify operation of the fume hood alarm monitor (sash at sash stop position) by temporarily reducing air flow through the hood until the alarm set point indicated on the design drawings is achieved.
4. Measure the hood face dimensions (sash at sash stop) and include this info along with the calculated face area and calculated face velocity in the balance report.

D. Lab Exhaust Fans:

1. Test operation of bleed-in dampers.
2. Measure total exhaust air flow from the building to each exhaust fan/fan plenum.
3. Test every fan on plenumized fan systems.

E. Gas Cabinets:

1. Balance exhaust to achieve an average face velocity at the face of gas cabinet access ports or windows (while open) of not less than 200 FPM, and a minimum velocity of 150 FPM at any point at the face of the access port or window.

3.9 HYDRONIC BALANCE - GENERAL REQUIREMENTS

A. Perform final hydronic balance after all systems have been flushed, cleaned, and filled.

B. Test hydronic systems in all modes of operation. In general, balance systems in the most restrictive operating mode.

C. Hydronic balance includes performance readings (flow, pressures, temperatures) on all pumps, coils, heat exchangers, and flow measuring devices. For coils 3 gpm or less at terminal units, record flows only. Adjust pump flows to actual system heads by adjusting balancing valves (constant volume systems). Flow measuring devices take precedence over pump head readings. Record discrepancies for evaluation. Provide pump head and flow (i.e. flow determined from shut off head, operating head and pump curve) and flow measuring device data.

D. Report pressure drop readings across all major system components both for flow determination and for deviations between actual and design values.

E. Record the pressure drop across water filtering devices.

F. Where Y or basket strainers are equipped with inlet and outlet pressure gauges, record the pressure drop.

G. Record (on flow diagrams) the flows and pressures obtained in each of the various circuits and modes of operation. Measure flows in parallel pumping systems when operating independently and jointly.

H. Adjust and set the memory stop for each balancing valve.

I. For auto-balancing valves, record differential pressure with auto-balancing valve throttling against maximum flow mode. .

J. For 3-way control valves, balance “bypass” flow to match “through” flow.

K. In general, balance variable flow systems to achieve design flow at all units simultaneously. Where the sum of the loads exceeds system capacity, the ratio of capacity/loads is defined as the system diversity factor. Calculate diversity factor and indicate calculated diversity factor in the balance report. Balance variable flow systems to minimize throttling loses and to optimize (reduce to lowest possible) differential pressure set points. Prior to beginning balancing, meet with the project Commissioner and agree to the exact procedures to be followed. Set static pressure set points to ensure the most hydraulically remote load can achieve design flow. Measure flow at each load individually to verify scheduled design flow is achieved at the lowest possible differential pressure set point. Reset and re-measure flow at each load until the lowest differential pressure set point is achieved. Verify that no control valve "lifts" at the final differential pressure set point, by closing all other control valves, allowing the controls to settle to the differential pressure set point, and then verifying the valve remains fully closed. Record the final differential pressure set point in the TAB report. Throttle balance valves at loads only as required to obtain accurate flow data; generally balance valves should otherwise be left fully open. (Exception: throttle balance valves at stacked coil sections (or similar arrangements)to provide equal flow to each coil in the stack.)For DDC systems, coordinate with DDC programmer to optimize differential set point.

3.10 VIBRATION TESTING

A. Perform vibration measurements for all rotating equipment 1/2 horsepower and larger, including compressors, pumps, fans and motors.

B. Inspect vibration isolation system and alignment and report deficiencies.

C. Allowable Vibration Tolerances: Self-excited, vibration maximum velocity shall not exceed the following limits, measured in inches per second RMS (not in mils peak to peak), filter in. Measure vibration at bearing caps of machine in vertical, horizontal and axial directions or at equipment mounting feet if bearings are concealed.

1. Except where noted otherwise: 0.20
2. Pumps: 0.13
3. Centrifugal Compressors: 0.13
4. Fans: 0.09

D. For variable speed equipment, inspect at full range of speeds. Verify the maximum safe speed the system can be run at before beginning tests. Modulate speed from minimum to maximum to test for possible harmonic vibrations. Record vibration at maximum operating speed and at any speed displaying harmonic vibration.

E. Include in the report a summary sheet indicating pass / fail for each unit. For each unit of equipment, record detailed initial measurements, corrections made, retest measurements, and suggested course of action for equipment that still fails limits after contractor correction.

SPEC EDITOR: EDIT ACOUSTICAL TESTING SECTION TO MAKE PROJECT SPECIFIC. CONSIDER ALWAYS INCLUDING THE SECTION ON TESTING 6 ROOMS IN CASE NOISE ISSUES ARISE AFTER CONSTRUCTION IS COMPLETE.

3.11 ACOUSTIC TESTING

A. Conduct acoustic testing with a calibrated sound level meter and octave band analyzer of the accuracy required by AABC or NEBB. Include dBA and individual octave readings. Use current ASHRAE manuals for reference levels, formulas and coefficients.

B. Record sound pressure readings by octave and in weighted dBA scale. Plot dB by octave and calculate RC and NC values. Compare against specified levels indicated on drawings or in specifications.

SPEC EDITOR: THE FOLLOWING ARE RECOMMENDED ROOM CRITERIA (RC - THE NEW STANDARD) VALUES FOR VARIOUS ROOM TYPES. (NOISE CRITERIA, NC - IS THE OLD STANDARD):
OFFICES: RC 30-35 (N) FOR PRIVATE, RC 35-40 (N) FOR OPEN
LECTURE HALLS: RC 25-30 (N)
OPEN PLAN CLASSROOMS: RC 35-40 (N)
PUBLIC AREAS: RC 35-45 (N)
LABS: RC 30-40 (N) - OFTEN NOT ACHIEVABLE WITH HEAVY AIR FLOW.

EDIT LIST BELOW AND/OR THE DRAWINGS OR DELETE SOUND PRESSURE TESTING.

1. Conduct sound pressure testing:
   a. In six rooms, designated by the Owner/Engineer.
   b. Where RC/NC criteria appears on the drawings.

3.12 PERFORMANCE TESTING

SPEC EDITOR: THIS PARAGRAPH IS RARELY USED. ACCURATE PERFORMANCE TESTING IS DIFFICULT AND EXPENSIVE. SOME SMALL EQUIPMENT (EG: ARI FAN COIL UNITS) AND COMPONENTS IN LARGER EQUIPMENT (EG: AMCA FANS) CARRY PERFORMANCE CERTIFICATION. IF WARRANTED, FACTORY TESTING OF CUSTOM EQUIPMENT IS GENERALLY PREFERRED OVER FIELD PERFORMANCE TESTING.

A. Equipment Performance Testing: For the equipment listed, test performance and verify that it meets scheduled capacity. Develop a system specific testing plan for review by the Architect / Engineer and the commissioner. Document all testing procedures, and corrections due to variations in actual testing condition versus scheduled performance.

SPEC EDITOR: THIS PARAGRAPH IS RARELY USED. WEATHER IS DIFFICULT TO PREDICT, AND RARELY COOPERATES WITH CONSTRUCTION AND OCCUPANCY SCHEDULES. IF USED, EDIT VERY CAUTIOUSLY.

B. Seasonal Performance Testing: For the systems listed, conduct testing at or near design outdoor conditions. Test, adjust, and balance air conditioning systems during summer season and heating systems during winter season, including at least a period of operation at outside conditions within 5 deg F wet bulb temperature of maximum summer design condition, and within 10 deg F dry bulb temperature of minimum winter design condition. Take final temperature readings during seasonal operation.

3.13 COMPLETION SERVICES

A. Final Check: Make final checks and complete any testing as directed.

B. Acceptance: Final acceptance of the project will not be made until a satisfactory report is received. Owner reserves the right to spot check the report by field verification prior to final acceptance.

3.14 TESTING, ADJUSTING, AND BALANCING REPORT

A. Submit TAB reports in compliance with specifications and the requirements listed below.

B. Submit progress TAB reports within 3 days of balancing *each* air, hydronic, and plumbing system, and more frequently if requested by the project Commissioner. Submit the final TAB report within one week of completing all testing, adjusting and balancing

C. Report all data in inch/pound units.

D. Provide date and time all readings were taken.

E. Include brief system descriptions, deficiencies, corrections made, unresolved problems, and recommendations.

F. Provide as-built schematic sketches for each system indicating all equipment, balancing related components, terminal devices, diffusers, grilles, registers, and valves. Use equipment nomenclature as defined in construction documents. Indicate room numbers, and correlate all devices to the balance report data.

G. Include a list of all testing equipment and devices used, including type, accuracy, manufacturer, model number, serial number, and calibration date.

H. Include definition of all abbreviations and acronyms, and all formulas used in calculations.

I. Provide the outside air dry bulb and wet bulb temperature at the beginning and end of each TAB day, correlated to the day's TAB work.

J. Number all report pages. Tab major sections of the report and provide a report table of contents.

K. Include complete nameplate data for all equipment.

L. Include flows and pressures in all operating modes. Indicate final E-O-L differential pressure set points, and the results of all tests (e.g. smoke stick tests, etc.)

M. Describe TAB procedures used; including procedure used in establishing differential pressure set point for variable speed drive controlled systems.

N. Include performance data for all major equipment, including providing copies of the approved fan curves, pump curves, coil data sheets, flow element curves, and Cv characteristics. This is not required for terminal units 2000 cfm or less.

END OF SECTION 230593

UNIVERSITY OF MICHIGAN
ARCHITECTURE, ENGINEERING AND CONSTRUCTION

ARCHITECTURE & ENGINEERING
326 East Hoover, Mail Stop B
Ann Arbor, MI 48109-1002
Phone: 734-764-3414
Fax: 734-936-3334

BuildingName
The Description of the Project
P00000000 0000

SPECIFICATION DIVISION 23

NUMBER SECTION DESCRIPTION

DIVISION 23
SECTION 230900 - MECHANICAL SYSTEMS CONTROLS

END OF CONTENTS TABLE

DIVISION 23

SECTION 230900 - MECHANICAL SYSTEMS CONTROLS

REVISION NOTES:

JUNE 2016: REVISED SECTION TO ADD CONSTANT VOLUME VENTURI(CVV) FUME HOOD LAB AIRFLOW CONTROLS. VAV FUME HOOD LAB AIRFLOW CONTROLS, INCLUDING ALL OTHER MECHANICAL CONTROLS IN THE VAV FUME HOOD LAB, REMAINS IN MS230910. REFER TO DESIGN GUIDELINE 230030 FOR ADDITIONAL GUIDANCE.

SEPTEMBER 2014: GENERAL REVISION INCLUDING: U-M TO PROVIDE UPS ENCLOSURE, REQUIRE THAT ALL COMPONENTS TO ACHIEVE THE SEQUENCE OF OPERATION BE PROVIDED, REQUIRE ALARMS BE PROGRAMMED, "ITEMIZE QUOTATION" REVISED TO "WHEN REQUESTED", "SUBMITTALS" REVISED TO REQUIRE DATA SHEETS BE ORGANIZED BEHIND TABS, VARIOUS TECHNICAL UPDATES INCLUDING: RELOCATED CONTROL VALVE RANGEABILITY REQUIREMENTS TO APPLY TO CONTROL VALVES, TEC ELECTRONIC ACTUATORS REVISED TO SPECIFY A MINIMUM STROKE LENGTH, "PNEUMATIC ACCESSORIES" REVISED TO ELIMINATE DRYERS WHEN USING TUNNEL AIR. REVISED STAT HEIGHT TO 44" A.F.F. TO MATCH ELECTRICAL SPEC.S AND ADA. D. KARLE FOR HVAC MTT.

DEC. 2013: REVISED BTU METER DESCRIPTION TO DELETE SPARLING (BTU COMPUTER NO LONGER AVAILABLE FROM SPARLING), IMPROVE DESCRIPTION, ADD BTU METER ENCLOSURE INFO. DELETED SOME MFR.S AS APPROVED FROM STM AMD STM CONDENSATE LIST BASED ON FEEDBACK FROM U-M PLANT ON QUALITY PROBLEMS. D. KARLE FOR HVAC MTT.

OCT. 2011: ADDED REQUIREMENT TO PROVIDE UPS PANEL (ARTICLES 1.1 AND 2.11) OPEN WIRE (ARTICLE 2.6) AND IMPROVED THE DAMPER SPECIFICATION (ARTICLE 2.8) (DK, PER HVAC MECH TECH TEAM)

LATEST REVISION DATE: 1/4/11 – BY S. WOLDT FOR THE HVAC MECH/TECH TEAM

DEC. 2010: REVISED FOR COMPLIANCE WITH ASHRAE 90.1 2007 (DK, PER MECH TECH TEAM)

DEC. 2010: ADDED PART 2.3, SPEC. FOR FAN COIL CONTROLLER. ADDED SPEC FOR ELECTRICALLY ACTUATED BALL STYLE CONTROL VALVES (2.7) (DK, PER MECH TECH TEAM).

6/26/06: ADDED ADA REQUIREMENTS FOR DEVICE MOUNTING HEIGHTS, SECTION 3.1.B. (DK)

5/31/06: ADDED PARAGRAPHS C AND D TO ARTICLE 2.5, REQUIRING CONTROLS CONTRACTOR TO RUN 120 VAC POWER TO ALL CONTROL ACCESSORIES. THIS REQUIREMENT WAS ONLY PARTIALLY COVERED IN SOME SECTIONS. CLARIFIED IN 1.1.C.10 THAT CONTRACTOR DELIVERS AND PICKS UP LPI DOORS FROM U-M'S SHOP. (DK)

EDITOR'S NOTE:

THESE SPECIFICATIONS MUST BE CUSTOMIZED APPROPRIATELY FOR EACH PROJECT, E.G. ADDING SPECIFICATIONS FOR COMPONENTS NOT ALREADY SPECIFIED IN PART 2. HOWEVER, DELETING COMPONENTS SPECIFIED IN PART 2 IS NOT TYPICALLY NECESSARY OR RECOMMENDED. IN ADDITION TO THESE SPECIFICATIONS, THE PLANS ARE TO INCLUDE THE FOLLOWING, AS A MINIMUM:

SCHEMATIC LAYOUT OF EACH SYSTEM SHOWING ALL DDC AND CONTROL COMPONENTS. COMPONENTS TO BE INSTALLED IN AUXILIARY CONTROL PANELS (LOOP POWERED INDICATORS, E.P. RELAYS, P.E. SWITCHES, DIFFERENTIAL PRESSURE TRANSDUCERS, ETC.) SHALL BE SO INDICATED BY SOME METHOD. (I.E. ASTERISK)

LOCATIONS OF ALL DDC PANEL ARRAYS.

PROVIDE TWO 20 AMP POWER CIRCUITS AT EACH DDC/AUXILIARY PANEL LOCATION. ONE CIRCUIT IS FOR THE DDC PANEL, THE OTHER IS FOR THE AUXILIARY PANEL. ELECTRICAL POWER REQUIREMENTS TO BE COORDINATED WITH ELECTRICAL DRAWINGS.

WIRING DIAGRAMS FOR EACH SYSTEM TO SHOW INTENT OF AUTOMATIC OR INTERLOCKED OPERATION.

SCHEDULES FOR DAMPERS, AIRFLOW MEASURING STATIONS, STATIC PRESSURE PROBE LOCATIONS, HUMIDITY RESET, TEMPERATURE RESET, DAY/NIGHT CONTROL ZONE, ETC.

THE SCOPE OF THIS SPECIFICATION INCLUDES CONTROLS FOR ANY LAB ROOM WITHOUT VAV FUME HOODS WHICH INCLUDES HOODS WITH COMBINATION SASHES. IF A LAB ROOM INCLUDES THOSE HOOD TYPES, U-M MASTER SPEC 230910 MUST BE INCLUDED TO COVER ALL MECHANICAL CONTROLS IN THOSE ROOMS.

PART 1 - GENERAL

1.1 RELATED DOCUMENTS

ALWAYS INCLUDE PARAGRAPH 1.1.A AND B IN EVERY SPECIFICATION SECTION. EDIT RELATED SECTIONS 1.1.B TO MAKE IT PROJECT SPECIFIC.

A. Drawings and general provisions of the Contract, Standard General and Supplementary General Conditions, Division 1 Specification Sections, and other applicable Specification Sections including the Related Sections listed below, apply to this Section.

B. Related Sections

1. Division 26: Electrical
2. 220523 Valves
3. 233600 Air Terminal Units
4. 230910 VAV Fume Hood Laboratory Air Flow Controls

1.2 SUMMARY

A. This Section specifies mechanical systems controls applicable to all project controls except for labs with variable air volume (VAV) fume hoods, including combination (vertical/horizontal) sash fume hoods. Controls in rooms with VAV and combination sash hoods shall be in accordance with Section 230910.

IF THE PROJECT WILL NOT SPLIT THE WORK BETWEEN THE MECHANICAL SYSTEMS CONTROLS CONTRACTOR AND THE UNIVERSITY OF MICHIGAN AS DESCRIBED IN 1.3, REVISE 1.3 AND THE BALANCE OF THE SPECIFICATION ACCORDINGLY.

1.3 SCOPE OF WORK

A. The complete control system work shall be split between the Mechanical Systems Controls Contractor and the University of Michigan as outlined below. As it relates to the extent of responsibility for work within this specification section, "provide" shall mean the identified party both furnishes and installs such item(s). "Furnish" shall mean the identified party furnishes the item for installation by others.

B. The Mechanical Systems Controls Contractor shall be a direct Subcontractor to the Contractor.

C. Summary of work by the Mechanical Systems Controls Contractor- shall include, but not be limited to:

1. Temperature control system consisting of all pneumatic and Direct Digital Controls (DDC) sensors, transducers, relays, switches, data communication network, etc. and all associated control wiring and conduit systems.
2. Provide control work and programming of all TECs in all labs except in rooms with VAV hoods, including combination sash fume hoods.
3. Provide fume hood monitors except in rooms with VAV hoods, including combination sash fume hoods.
4. Install Terminal Equipment Controllers (TECs) on terminal equipment. Install Room Temperature Sensors (RTS's).

EDITOR: DRAWINGS SHOULD INDICATE LOCATION AND TYPE OF COMMUNICATION CONNECTION SHOWING NECESSARY CONDUIT TO THAT LOCATION (NEAREST DDC PANEL FOR EXISTING BUILDINGS OR NEAREST PHONE CLOSET FOR NEW BUILDINGS).

5. Connection of new DDC panels to the Automation Level Network (ALN) to permit communication to the Building Automation System (BAS). Ethernet connection of Utility Meters to host computer. Connection to host computer via trunk connection to an existing DDC panel, communications closet, or local Ethernet data port, and as indicated on the drawings.
6. Engineering, submittals, as-built drawings, and operation and maintenance manuals. Configure modular DDC panel terminations such that analog inputs and analog outputs terminate on separate modules, do not intermix analog outputs and inputs on the same module.

7. Provide an auxiliary temperature control panel adjacent to each DDC panel. Provide additional auxiliary panels as required to house the required quantity of control components. Auxiliary panels shall not be smaller than 24"x24", and shall have a 1’ high by minimum 2’ wide (but not less than panel width) contiguous clear area which can be used for future expansion. Provide all wiring between the DDC panel and the auxiliary panel(s).
8. Provide a Loop-Powered Indicator (LPI) panel adjacent to the auxiliary panel. Provide additional LPI panels as required to house the required quantity of LPIs. Provide all wiring between the DDC panel and the LPI panel(s).
9. Install a UPS panel directly under the DDC enclosure. Provide all interconnecting power wiring between the DDC panel power supply and the UPS panel duplex receptacle.
10. Provide a 6”x 6” wiring trough extending over and between each DDC, auxiliary temperature control, and LPI panel.
11. Installation of U-M furnished DDC and UPS panel enclosures.
12. Provide thermostats, control valves, dampers, operators, meters, control air tubing, etc.
13. Provide gauges, indicating devices, electric and electronic control accessories, and other control system devices.
14. Provide calibration and start-up services of non-DDC control systems.
15. Termination of all wires for input/output (I/O) devices external to the DDC panel, including, but not limited to: sensors, H/O/A switches, hard-wired safeties, relays, etc., TECs, RTS’s, Field Level Network (FLN), and any other field devices.
16. Termination of all wires inside auxiliary panels.
17. Install U-M furnished data acquisition panel. Provide wiring from meters and transmitters to utility data acquisition panels. Provide communication wiring to utility data acquisition panels. Terminations inside panels by U-M.
18. Provide site supervision of mechanical control work and coordination with related electrical and fire alarm work and packaged controls.
19. Provide all control wiring and electrical components necessary for each system to permit automatic or interlocked operation, such as: air cooled condensing units, high level alarm circuits, damper end switches, fuel oil pumping/monitoring systems, chiller control/interface panels, boiler control/interface panels, early break contacts on disconnects to VSD's, cooling tower vibration switches, etc.
20. All other work and components required for complete and operational control systems, and that allows the sequence of operation indicated on the drawings or elsewhere to be achieved, except work specified as provided or furnished by the University of Michigan.
21. Start-up, calibration, and checkout of sensors, transducers, thermostats, control valves, dampers/damper operators, meters, and all other components provided.
22. Commission all mechanical controls provided. Provide a detailed list of every control point installed to the project Commissioning Authority (CxA), and verify proper operation of each component prior to commissioning the controls with the CxA. Include, in checklist format, a detailed procedure to verify all aspects of the controls’ Sequence of Operation.

23. Training of U-M personnel to familiarize operations staff with the configuration, operation, and maintenance of provided controls.

D. DDC related work by the University of Michigan:

1. Termination of all wires and pneumatic lines within the DDC panel, excluding the power supply.
2. Termination of the I/O wires that run between the DDC panel and the auxiliary panel(s) (DDC panel end only).
3. Termination of the LPI wires within the LPI panel(s).
4. Point database entry.
5. Create, enter and checkout all "Powers Process Control Language" (PPCL) programming, excluding rooms designated as laboratories.
    a. Provide all programming required to achieve the sequence of operation and the control intent indicated on the documents.
    b. Program the following alarms, whether specifically indicated in the sequence of operation or not. Include appropriate deadbands and time delays:
        1) For every indicated or implied setpoint, create a variation from setpoint alarm. Examples include air handler discharge temperature, chilled water temperature, end-of-line DP, etc.
        2) Status does not match command.
        3) Failed point.
        4) Exception: Unless specifically indicated, alarms are not required for Terminal Equipment Controllers controlling space temperature.
    c. Programming lines shall be grouped into subparts and explained with comment fields. The comment fields shall include the related part of the project sequence of operation that each program subpart is intended to accomplish.
6. Provide temporary programming to provide building heating or cooling during construction.
7. Selection of the appropriate size, type, and quantity of DDC panels to be used.
8. Provide all DDC panel circuit boards, associated I/O modules, and communication hardware.
9. Furnish DDC panel UPS.
10. Furnish TECs and RTS’s for all rooms types except labs with VAV fume hoods.
11. Furnish all DDC panel enclosures and UPS enclosures.
12. Provide data acquisition panels for metering of all utilities, including steam, condensate and BTU metering. Provide internal panel components including din rail, fuse, power terminal block, power supply, 24V terminal block, communication module, and read out modules. Terminate all input/output wiring and data connections to the panel. Start-up, configure and commission the panel.
13. Punch the LPI panel doors provided by MSCC. MSCC must drop off and pick up doors from U-M’s shop.
14. Start-up and checkout of DDC panels and termination of associated sensors, transducers, and other components at the DDC panel.

15. Verify correct functionality of every DDC point associated with every DDC panel, and for every input and output associated with every TEC.
16. Configure trends for every analog (30 minute trend interval) and digital(change of value) input to DDC panels. Configure room temperature (or the controlled variable) trends for every terminal equipment controller, at a 30 minute interval.
17. Commission DDC panels and verify each sequence of operation including at TECs and similar DDC controllers, with the project CxA.
18. Training of U-M personnel on the various Sequences of Operation, the DDC panel and its connections, the LPI panel, the UPS panel, and the TECs or similar controllers and their related components that were provided by the University of Michigan.

1.4 ITEMIZED QUOTATION

A. When requested, immediately provide an itemized bid breakdown to the Owner post bid, for review and approval. Include itemized material costs for all major components, installation labor costs, subcontractor labor and itemized material cost, and engineering costs, for base bid and for each alternate, for the entire work scope of the Mechanical Systems Controls.

1.5 ACCEPTABLE MECHANICAL SYSTEMS CONTROLS CONTRACTORS

A. The following MSCCs are acceptable for the furnishing and installation of pneumatic, electric and DDC components as specified in this section:

1. Siemens Building Technologies
2. Honeywell, Inc.
3. Johnson Controls, Inc.

EDITOR: CONTACT THE UM DESIGN MANAGER TO DETERMINE WHICH OF THE ABOVE CONTROLS INSTALLATION CONTRACTORS ARE TO BE LISTED AS ACCEPTABLE FOR YOUR SPECIFIC PROJECT. DO NOT LIST CONTRACTORS IN HIDDEN TEXT WITHOUT SPECIFIC PERMISSION FROM U-M DESIGN MANAGER OR PLANT ENGINEER.

1.6 COORDINATION

A. Provide controls and control wiring compatible with equipment provided by others and with existing equipment and controls.

B. Coordinate the installation of controls with the installation of other project equipment.

C. Ensure all control components are located and installed correctly so that the specified and intended performance and the sequence of operation is achieved, including components supplied and installed by others.

D. Coordinate with laboratory equipment suppliers (constant flow fume hoods, etc.) regarding dimensions and mounting location for alarm monitors and assure proper accommodation is made for the installation of other devices related to laboratory airflow controls.

1.7 SUBMITTALS

A. The Mechanical Systems Controls Contractor (MSCC), prior to submitting the specified number of submittal drawings through the General Contractor (GC) or Construction Manager (CM) shall:

1. Pre-submit two copies of preliminary shop drawing submittals directly to the designated Plant Operations Engineer and. Submit copies of the transmittal only to the GC or CM.
2. The Plant Engineer will meet with the MSCC to discuss his review comments.
3. The MSCC shall incorporate the review comments, as required, into the final shop drawing submittals. No work shall be done until the final submittals are approved.

B. Shop drawings shall contain, as a minimum, the following:

1. Schematic diagrams of all systems being controlled and/or monitored indicating all DDC points, point numbers (using UM conventions), sensors, relays, controllers, valves, dampers, complete control wiring schematics (including starter, VSD, DX system, etc. wiring diagrams), pneumatic tubing, DDC panel maps, etc.
2. Wiring of each point to the DDC panels, including terminal block numbers.
3. Layout of all auxiliary devices and panels, and wiring of relays, contacts, etc. Include terminal block numbers at all control panels, at all mechanical equipment, and at all control devices.
4. Complete Sequence of Operation for each system being controlled, including set points, alarms settings, etc. in narrative format.
5. Schematic diagram of the total DDC system layout, including all panels, trunk cables, peripheral devices, locations, etc.
6. Pneumatic compressed air supply equipment, risers, and major tubing runs.
7. Complete bill of materials to identify and quantify all devices.
8. A schedule of all nameplates and associated wording.
9. An index of sheets for ease of access.
10. Network diagram indicating routers, servers, and peripheral devices, including location of each device (room number) and indicating network connection points to Owner's BAS and/or Utility Meter data acquisition system.
11. Wiring diagrams and locations of power supplies.
12. Additional submittal items required for any room designated as a lab:
    a. Equipment schedule for each room or zone, with the following information:
        1) Equipment tag, room served, occupied/unoccupied min., max., and offset CFM; lab subnet description, name, and network address; network and power trunk identifier.
        2) Model number of each control component.
        3) Function of each TAU and control component

C. Submit, as a minimum, the following design data schedules indicating:

1. Airflow Measuring Probes:
    a. Device tag.

b. Equipment served/function.
c. Model number.
d. Size, type, and location.
e. Station area in square feet.
f. Max/Min Range.
g. Magnehelic scale range.
h. Velocity pressure range.

2. Air and water pressure sensors:
   a. Device tag.
   b. Equipment served/function.
   c. Model number.
   d. Size, type, and location.
   e. Max/Min Range.
3. Control Dampers:
   a. Damper tag.
   b. Equipment served/function.
   c. Model number.
   d. Blade configuration and orientation.
   e. Size in width, height, and blade width.
   f. Pressure drop.
   g. Type of seals (blade and edge).
   h. Normal position.
   i. Size, quantity, type, and model number of actuators.
   j. Method of actuator mounting and actuation.
   k. .
4. Control Valves:
   a. Valve tag.
   b. Equipment served/function.
   c. Valve flow rate (GPM).
   d. Line size.
   e. Specified valve pressure drop (ft. head).
   f. Valve size.
   g. Valve Cv.
   h. Actual valve pressure drop (ft. head).
   i. Valve normal position.
   j. Valve spring range.
   k. Valve shut-off rating (ft. head).
   l. Valve body pressure/temperature rating.
   m. Valve type/model number.
   n. Actuator type/model number.
5. TECs:
   a. Device tag.
   b. Equipment served/function.
   c. Model number and application code.
   d. Associated sensor location/tag.
   e. Size, control values, etc.

D. Submittal Requirements

1. Shop drawings shall be 11" x 17" size (minimum).
2. All schematics and drawings shall be done on CAD. The electronic files shall be in IBM compatible Autocad version 2004 (or above) format.
3. Product data shall include description and complete engineering data for each control system component.

4. Data sheets shall be organized behind sheet tabs. Each sheet tab shall indicate the category or component name (i.e. valves, dampers, relay & switches, thermostats, temperature transmitters, pressure transmitters, air flow stations, TECs, etc.).
5. Since many items are interrelated and should be checked concurrently, all of the MSCC's DDC related shop drawings shall be submitted at one time. No consideration will be given to partial submittals, except valve and damper submittals on approval only. Any partial submittals must be included in the complete submittal package.

E. Project Record Documents

1. Revise shop drawings to reflect actual installation and operating sequences and provide a final electronic file on CD.

F. Operation and Maintenance Manuals

1. The MSCC shall provide the specified number of copies of complete operation and maintenance instructions for all system components furnished.
2. Include as-built system schematic drawings and wiring diagrams.
3. Indicate final set points, settings, and adjustments of all components.
4. Include project specific catalog cuts and data sheets indicating installation, operation, maintenance, repair, wiring diagrams, calibration, calibration tolerances, inspection period, cleaning methods and cleaning materials for all components.

1.8 QUALITY ASSURANCE

A. Manufacturers and Products: The products and manufacturers specified in this Section establish the standard of quality for the Work. Subject to compliance with all requirements, provide specified products from the manufacturers named in Part 2.

1. Where not indicated in Part 2, all devices shall be as manufactured by Honeywell, Johnson Controls or Siemens.

B. Reference Standards: Products in this section shall be built, tested, and installed in compliance with the specified quality assurance standards; latest editions, unless noted otherwise.

1. Underwriters Laboratory or Intertek (ETL) (listed and labeled).
2. National Electric Manufacturer’s Association (standards pertaining to components and devices for electrical control systems)
3. National Fire Protection Associate NFPA 90A "Standard for the Installation of Air Conditioning and Ventilating Systems"
4. National Electrical Code NFPA 70.

1.9 DELIVERY, STORAGE AND HANDLING

A. Shipping and storage protection shall be provided by manufacturer to insure that the interior and exterior of components are completely protected from damage, dirt or weather. Components shall be continuously covered with plastic or other durable means, until just prior to installation. Maintain protection after installation to protect against on-going construction activities.

1.10 WARRANTY

A. Provide a complete warranty for parts and labor for a minimum of one year from the date of Substantial Completion.

PART 2 - PRODUCTS

2.1 GENERAL

A. DDC panels, including field and zone controllers/panels and all related software shall be the Siemens Apogee Building Automation System.

B. Provide components compatible with new and existing DDC controller I/O modules, and with equipment provided by others. The MSCC shall become familiar with the DDC system's requirements, limitations, and characteristics.

IMPORTANT: DESIGNER SHALL CLEARLY DELINEATE ON THE PROJECT DRAWINGS WHICH SPACES ARE LABORATORIES.

2.2 LABORATORY CONTROLS

A. Provide laboratory controls for any space designated as a laboratory and where indicated, except for rooms with VAV fume hoods and hoods with combination sashes. System shall include: temperature, pressure, and other sensors/transmitters; control valves; control, network, and power wiring; power supplies; routers, servers, and all other devices required for a complete system.

1. The system shall utilize conventional terminal air flow units for supply and general room exhaust and venturi style terminal air flow units for constant volume fume hoods and any other constant volume exhaust point. Refer to related section 233600.
2. Provide programming of all laboratory controls.
3. The system shall function to achieve the sequences of operation detailed on the drawings.
4. Each room or zone shall have a dedicated control system. Systems shall be independent and stand-alone from the Owner's BAS. Failures of the BAS system or network communications between the BAS and the system (cut communication cables, router or server failures, etc.) shall have no impact on individual laboratory control.
5. The system shall perform the following control functions:
   a. Pressurization Control: Control supply and auxiliary/general exhaust at a volumetric offset to maintain lab pressurization (positive, negative, or neutral). Controller shall maintain a constant offset (adjustable) between the sum of the room's total exhaust and the make-up/supply air volumes. This offset shall represent the volume of air that will transfer to or from the corridor or other adjacent rooms. Pressurization control shall consider networked devices, non-networked devices, and any number of constant volume devices.

b. Lab Temperature Control: Regulate lab space temperature through a combination of supply air volumetric control and control of reheat coils and other auxiliary temperature control devices, in response to temperature sensor(s).
c. Occupancy Control: Reset minimum volume settings and/or temperature control set points, based upon external signals from occupancy detectors, local over-ride buttons, and similar devices.
d. Constant volume fume hoods and other constant volume exhaust points (excluding general room exhaust): The self-actuated Constant Volume Venturi (CVV) Terminal Airflow Unit shall maintain a constant airflow set point.
e. Fume Hood Monitoring: Alarm unsafe condition at each fume hood.
f. Each lab room shall include a labeled Room Differential Pressure Indicating Gauge to indicate room pressurization relative to the adjacent room or corridor. Provide an engraved POS/NEG label (with 3/8" high lettering) adjacent to the gauge labeled "Correct Room Pressure Offset: X, where X = "POS" (positive) or "NEG" (negative) as indicated by the room volumetric offset indicated on the design documents.
g. Other control functions as indicated on the drawings.
h. Interface with the Owner's Siemens Apogee PPCL Building Automation System.

CONSIDER IF OTHER LABORATORY EQUIPMENT WOULD BENEFIT FROM BEING EQUIPPED WITH A FUME HOOD MONITOR AND INDICATE THAT EQUIPMENT ACCORDINGLY. EXAMPLES: EXISTING FUME HOODS, BIO-SAFETY CABINETS.

B. Provide fume hood monitors for constant volume fume hoods and for other laboratory equipment where indicated.

1. Monitor shall include audible alarm, visual LED alarm, and a common (single) alarm silence button.
2. The fume hood monitor shall provide an alarm indication for the following conditions:
   a. Low fume hood face velocity as detected by:
      1) Insufficient differential static pressure as detected by the TAU- CVV pressure switch (Phoenix CVV Terminal Air Flow Units).
      2) Insufficient air volume, as detected by the air flow station (Siemens CVV Terminal Air Flow Units).
      3) Sash raised above sash stop position.
   b. When an alarm condition is detected, audible and visual alarm indicators shall activate. Pushing the alarm silence button shall mute the alarm for an adjustable time delay, initially set at 10 minutes. Alarm shall re-sound after the time delay, until alarm condition clears. Visual alarm shall remain lit until alarm conditions clears.

3. Sash position shall be sensed by using a vertical sash position sensor. The vertical sash sensor shall consist of a precision 10-turn potentiometer mechanically coupled to a constant tension spring reel. Resolution shall be +/- 1/2 inch or better. A stainless steel, burr and snag-free cable shall be attached to the spring reel. Expected lifetime based on manufacturer's tests shall be over 200,000 full height sash movements. Sash sensor shall be installed in a location on the fume hood easily accessible for service.
4. Fume hood monitor shall be suitable for surface mounting on the front of the fume hood.
5. Approved fume hood monitors:
   a. Phoenix FHM530 Controller (Provide for Phoenix CVV Terminal Air Flow Units)
   b. Siemens (Provide for Siemens CVV Terminal Air Flow Units)

BELOW PARAGRAPH INDICATES THAT POWER SUPPLIES SHOULD BE INSTALLED ABOVE DOORS TO LABS. DESIGNATE THE LOCATION OF THIS EQUIPMENT ON THE DRAWINGS. WORK WITH ELECTRICAL ENGINEER TO DESIGNATE THE RECEPTACLE PANEL CIRCUITS TO FEED LAB CONTROL POWER SUPPLIES. DEPENDING ON LOAD, MULTIPLE POWER SUPPLIES MAY BE FED FROM A SINGLE 120 VAC CIRCUIT.

C. Install power supplies secured to a wall and mounted above the doors to labs, unless indicated otherwise. Utilize receptacle panel circuits designated for powering lab control power supplies.

D. Provide power supplies for lab airflow controls in NEMA 1 metal enclosures, adequately ventilated to prevent overheating of the equipment, with exterior labeled "Laboratory Airflow Controls Power Supply", and listing the room numbers served. Maximum cabinet projection from wall shall be 8 inches. Label each secondary circuit inside the cabinet with the room number(s) served.

1. Control transformers shall be rated NEC Class 2 and shall meet all the requirements and recommendations of the laboratory airflow controls manufacturer.
2. No more than five pressurization zones shall be served from a single control transformer. No control transformer shall exceed 500 VA.
3. Each pressurization zone shall be powered by a dedicated (isolated) secondary circuit. Each secondary circuit shall include a disconnect switch, "power on" indicator, and be current limited with a slow blow fuse or circuit breaker.

E. Provide a disconnect switch, with shielded terminations, for line side power (one per control transformer). Locate inside the power supply enclosure.

2.3 ELECTRONIC SENSORS, INDICATORS, TRANSDUCERS AND COMPONENTS

A. Temperature and Humidity Sensors:

1. Temperature sensor assemblies shall consist of a Resistive Temperature Device (RTD's) with a 4-20 mA 2-wire transmitter and gasketed utility box enclosure. Sensing element shall be platinum with 100 ohms resistance at 32 deg. F. Accuracy shall be +/- 1/2 deg. F over the entire range.

a. Single point duct temperature sensor shall be rigid bulb type with stainless steel (SS) sheath, aluminum tip, and have a calibrated span of 20-120 deg. F or 30-250 deg. F for heating applications.
b. Averaging element duct mounted temperature sensor shall have a SS minimum 25 ft. long continuous element sensor along the entire length, and have a calibrated span of 20-120 deg. F or 30-250 deg. F for heating applications.
c. Rigid averaging element duct mounted temperature sensor shall have a brass case, bendable sheath, continuous element sensor along the entire length, and have a calibrated span of 20-120 deg.
d. Outside air sensor shall be designed to mount on a conduit, include an elbow type enclosure, sun shield, and have a calibrated span of -58-122 deg.
e. Liquid immersion temperature sensors shall have 5 1/2" long probe with SS well, and weather tight enclosure. Transmitters for chilled water shall have a calibrated span of 20-120 deg. F or 30-250 deg. F for heating applications.
f. Surface mount thermal-ribbon flexible sensor for pipe mounting shall have SS braid over lead wires, use pressure sensitive adhesive, must be properly insulated, and have a calibrated span of 30-250 deg. F.
g. Room temperature sensors (non-TEC) shall have a span of 20-120 deg. F, locking covers, and when pneumatic, match the pneumatic thermostats used.
h. Adjustable room temperature sensors (non-TEC) shall have a digital temperature display, high accuracy set point slide, flush mounted override button, and a temperature range of 55-95 deg. F.
i. Approved Manufacturers:
    1) TCS
    2) Siemens
    3) Minco

2. Outside Air Master Temperature and Humidity Sensors - Dual System:
    a. Single point outside air temperature RTD shall be 1000-ohm thin film platinum resistor sensor with 4-20 mA 2-wire output transmitter with solar shield.
    b. Outside air humidity sensor shall be thin film alumina substrate capacitance signal generating sensor with 4-20 mA 2-wire output transmitter with 0-100% relative humidity range within +/- 1% RH.
    c. Approved Manufacturers:
        1) Viasala
3. High Precision Temperature Sensors: (for temperature inputs used for BTU calculations)
    a. Temperature transmitter with 100 ohm platinum RTD sensor and 4-20 mA 2-wire DC output. Zero and span shall be continuously adjustable. Sensor and transmitter shall be a matched assembly. Accuracy shall be +/- 0.1% of calibrated transmitter span, including combined effects of repeatability, hysteresis and linearity. Calibrated range shall be 20 to 120 deg. F. Both CHWS and CHWR sensor/transmitter assemblies shall have the same span and shall be factory calibrated as a matched pair.

b. Liquid immersion sensors shall have welded stainless steel thermowell. Transmitters shall be of the potted type or shall have a thermally isolated watertight enclosure. Length of sensor and thermowell shall be selected based on the diameter of the pipe to provide accurate, reliable and homogeneous sensing of the liquid temperature.
c. Approved Manufacturers:
1) TCS
2) Minco

4. Humidity Sensors:
a. Sensor element shall be thin film capacitive type or bulk polymer resistance type, accuracy of +/- 2% RH, range of 0-100% RH with 4-20 mA 2-wire linear output. Factory calibrate for maximum accuracy at mid-range of normal operating humidity. All humidity sensors shall be resistant to chlorine and other cleaning agents.
b. Room Sensors shall have locking cover.
c. Duct Sensors shall have duct probe and mounting plate.
d. Approved Manufacturers:
1) Siemens
2) TCS
3) General Eastern
4) Vaisala

5. Vivarium Temperature and Humidity Sensors: (for wet service)
a. Room temperature RTD shall be 100 ohm platinum sensor with 4-20 mA 2-wire output transmitter. Transmitter shall be waterproof or shall be remote mounted.
b. Room humidity sensor shall have a 4-20 mA 2-wire output transmitter, 0-100% relative humidity range, accuracy of +/- 2% RH, shall be waterproof, and shall be resistant to chlorine and other cleaning agents.
c. Combination units shall comply with the above, but shall be mounted in a single enclosure.
d. All vivarium sensors shall have rust proof and waterproof covers and be protected by a stainless steel "U"-shaped guard firmly attached to the wall.
e. Approved Manufacturers:
1) Viasala
2) TCS
3) General Eastern
4) Siemens

B. Loop-Powered Indicators

1. All analog sensors (i.e., temperature, humidity, CO2, CO, etc.) shall be provided with a Loop-Powered Indicator (LPI) mounted on a separate dedicated LPI panel, except those sensors that are provided with a local display. Local displays shall be mounted at the DDC panel array.
2. Indicator shall be designed to display any 4-20 mA transmitter signal directly in the engineering unit of the measured media. The display shall be powered directly by the measured 4-20 mA signal without requiring an additional power supply. Indicator shall not impose impedance on the current loop beyond the capability of the transmitter.
3. Display shall have minimum 5/16" LCD digits, with 3-1/2 digit capability selectable decimal point and selectable scale. Accuracy of indication shall be 0.1% of scale.

4. Indicator shall be provided with a lettered plate indicating appropriate engineering units.
5. Approved Manufacturer:
   a. R. E. Technologies, Inc. (Kele Assoc.)

C. Pressure and Flow Sensors

1. Air Differential Pressure Transducer:
   a. Variable capacitance type with ranges not exceeding 150% of maximum expected input. Transducer shall have zero and span adjustment. Output shall be 2-wire 4-20 mA with 24 VDC input.
   b. Safe over pressure rating shall be minimum 5 times the range.
   c. Temperature compensated with thermal error of not greater than 0.04% of full scale in temperature range of 40 to 100 deg. F.
   d. Accuracy shall be 1% of full scale.
   e. Approved Manufacturers:
      1) Air Monitor
      2) Setra
      3) Modus
2. Air Static Pressure Sensors:
   a. Duct mounted sensors shall be easily removable for cleaning, have multiple sensing ports, and fabricated of aluminum, copper, or SS. Sensors used in outdoor or condensing environments shall not be copper.
   b. Wall or ceiling mounted sensors shall be shielded, suitable for surface or flush mounting, complete with multiple sensing ports, contain a pressure impulse suppression chamber, and fabricated of aluminum, paintable steel, or SS as required.
   c. Outside air mounted sensors shall be shielded, complete with multiple sensing ports, maintain sensing accuracy regardless of wind flow direction or pattern, and fabricated of aluminum or SS.
   d. Accuracy shall be 1% of actual pressure value.
   e. Provide a companion 4" Magnehelic gauge, mounted at auxiliary panel, of appropriate span for each sensor. Gauges shall be graduated in inches W.C. Provide a phenolic identification tag for each gauge.
   f. Approved Manufacturers:
      1) Air Monitor
      2) Siemens
      3) Dwyer
      4) Honeywell
3. Airflow Sensors:
   a. Provide where indicated amplified signal airflow traverse probe(s) or airflow stations, complete with straighteners when required, capable of continuously monitoring the fan or duct capacities (air volumes) it serves.
   b. Each airflow array shall contain multiple total and static pressure sensors positioned at the center of equal and symmetrical cross-sectional areas, and interconnected by their respective averaging manifolds.
   c. Sensors shall not protrude beyond the surface of the array, nor shall be adversely affected by particle contamination normally present in building airflow systems.

d. The airflow array shall be fabricated of galvanized steel or aluminum of adequate gauge to withstand the velocities to be encountered and with all required mounting brackets, plates, gaskets, and flanges.
e. Accuracy shall be a minimum of 3 percent of actual airflow over the designed range of flow.
f. Provide a companion 4" Magnehelic gauge, mounted at auxiliary panel, of appropriate span for each sensor array. Gauges shall be graduated in CFM for airflow measurement. Provide a phenolic identification tag for each gauge.
g. Approved Manufacturers:
    1) Air Monitor
    2) Tek-Aire
    3) Dietrich-Standard
    4) Ramsey Air

4. Steam/Liquid Differential Pressure Transducers: (flow only)
    a. Each differential pressure transducer shall be selected and calibrated for operations between 0 and 125% of the normal differential pressure and up to 150-psig line pressure. The calibration point shall be rounded upward to the nearest 10 inches WC (for spans less than 200" WC) or to the nearest 5 psi for larger spans. Calibration date shall be included on an embossed tag attached to each transmitter.
    b. The accuracy, including linearity, hysteresis and repeatability, of the transducer for measuring differential pressure shall be better than 0.25% of the span stated above throughout a minimum of a 6:1 turndown. Turndown ratio shall be based on the actual flow span.
    c. The transducer shall not be damaged by pressures of up to 500 psig on either side of the transducer and all wetted parts shall be inert in the presence of up to a 40% concentration of ethylene or polypropylene glycol in water.
    d. Provide a drain valve for each side of the pressure chamber. Furnish and install mounting brackets appropriate for the installation location.
    e. Span and zero shall be individually adjustable.
    f. Shall be 2-wire and 4-20mA output.
    g. Approved manufacturers:
        1) Tobar
        2) ITT Barton
        3) Dietrich - Standard
        4) ABB
        5) Siemens
        6) Rosemont/Fischer
        7) Honeywell

5. Steam/Liquid Differential Pressure Transducers: (pressure only)
    a. Each differential pressure transducer shall be selected and calibrated for operations between 0 and 200% of the normal differential pressure. The calibration point shall be rounded upward to the nearest 10 inches WC (for spans less than 200" WC) or to the nearest 5 psi for larger spans. Calibration date shall be included on an embossed tag attached to each transducer.

b. The accuracy, including linearity, hysteresis and repeatability, of the transducer for measuring differential pressure shall be better than 2% of the span stated above throughout a minimum of a 4:1 turndown. Turndown ratio shall be based on the actual differential span.
c. The transducer shall not be damaged by pressures of up to 500 psig on either side of the transducer and all wetted parts shall be inert in the presence of up to a 40% concentration of ethylene or polypropylene glycol in water.
d. Provide a drain valve for each side of the pressure chamber. Furnish and install mounting brackets appropriate for the installation location.
e. Span and zero shall be individually adjustable.
f. Shall be 2-wire and 4-20 mA output.
g. Approved manufacturers:
    1) Tobar
    2) ITT Barton
    3) Dietrich - Standard
    4) ABB
    5) Siemens

6. Indication Gauges for Steam/Liquid Pressure Transducers:
    a. Each transducer shall come with an indicating gauge that reads in GPM for flow measurement or inches WC for pressure sensing. The gauge shall be analog differential pressure type piped in parallel to the transducer.
    b. The analog pressure gauge shall be selected and calibrated for the same span as the transducer it serves.
    c. The accuracy, including linearity, hysteresis and repeatability, of the gauge for measuring differential pressure shall be better than 3% of the span stated above throughout its span. Calibration data shall be included on an embossed tag attached to each gauge.
    d. The gauge shall not be damaged by pressures of up to 500 psig on either side of the gauge and all wetted parts shall be inert in the presence of up to 40% concentration of ethylene or polypropylene glycol in water.
    e. Scale shall be a minimum of 4.5" diameter. Furnish and install two bleed fittings for each gauge and mounting brackets appropriate for the installation location.
    f. Gauges shall be field mounted. Provide a LPI for readout at the DDC panel array. Provide a phenolic identification tag for each gauge and indicator.
    g. Approved manufacturers:
        1) Beckman
        2) Moore
        3) Testoterm
        4) Dwyer
        5) Transducer manufacturer’s gauge

7. Steam/Liquid Flow Sensors: (differential pressure type)
    a. Uni-directional sensors shall be of the venturi type or velocity pressure type. They shall be constructed of stainless steel, sized to the system's range of flow, and have an accuracy of 0.5%.
    b. Bi-directional sensors shall be of the velocity pressure type. They shall be constructed of stainless steel, sized to the system's range of flow, and have an accuracy of 0.5%.

c. Approved Manufacturers
   1) Preso
   2) Gerand
   3) Dietrich-Standard (Annubar Diamond II)

8. Three Valve Manifolds for Steam/Liquid Pressure Transducers:
   a. Provide a three-valve manifold for each transducer. Pressures of up to 500 psig shall not damage the manifold. All wetted parts shall be inert in the presence of up to a 40% concentration of ethylene or polypropylene glycol in water.
   b. The manifold shall be designed for direct mounting on the transducer it serves and utilizes two quarter turn valves to provide zeroing, blocking and normal service modes.
   c. Approved Manufacturers:
      1) D/A Manufacturing

EDITOR: CONTACT THE UTILITIES AND PLANT ENGINEERING DEPARTMENT VIA THE U-M DESIGN MANAGER FOR INSTRUCTIONS ON TYPE OF FLOW METER TO USE FOR STEAM, CONDENSATE, CHILLED WATER, AND HEATING HOT WATER.

9. Liquid Flowmeters: (Electro-Magnetic Type)
   a. The meter system shall consist of a primary flow sensor and transmitter. The flow sensor shall be equipped with 150-lb. flanges. The meter system shall be installed with all necessary grounding components and gaskets per manufacturer's instructions. The meter shall be capable of bi-directional operation. The meter shall be sized appropriately for the range of flow for the system. The electrodes shall be SS or Hasteloy C. The transmitter shall be provided with a remote mounting bracket, cable, integral LCD display, NEMA 4X housing, shall indicate flow rate and totalized flow, shall have an isolated 2-wire 4-20 mA linear output flow rate signal, and shall have a pulsed output signal for totalization. The transmitter shall be capable of being field calibrated and reprogrammed from the outside housing via magnetic probe or security protected integral keypad menu switching. Unit electronics shall have noise immunity. The primary flow sensor and transmitter shall be mounted in accessible locations. Unit shall have the capability to maintain flow total in non-volatile memory. The flowmeter and transmitter as a unit shall have the following minimum characteristics:
      1) Flowmeter Liner:
         a) Heating hot water, domestic hot water, and other water systems operating at or above 110°F: Teflon
         b) Chilled water, domestic cold water, and other water systems operating below 110°F: Polyurethane
         c) Steam condensate: Teflon to 300°F, Ceramic over 300°F, and as suitable for the expected fluid conditions.
      2) Accuracy:
         a) At 1 to 33 feet per second velocity: ±0.5% of rate.
         b) At 0.3 feet per second velocity: ±2% of rate.

3) Each unit shall be factory calibrated for the specified flow and shall be calibrated in both directions if the application is bi-directional. Calibration shall be a minimum of three point. Specific performance test data shall be furnished with the meter.
4) Each meter shall provide two analog 4-20 mA signals or a single 4-20 mA signal and a digital contact closure on reverse flow.
5) Meters for steam condensate shall be capable of sensing with condensate conductivity down to 6 µS/cm.

b. Provide a phenolic tag for each transmitter to identify service and meter ID number (i.e. SECONDARY CHILLED WATER FLOW, FM-1, etc.).

c. Approved Manufacturers (Water)
1) ABB
2) Siemens
3) EMCO
4) Rosemount
5) Krohne

d. Approved Manufacturers (Steam Condensate)
1) Rosemount
2) Krohne
3) ABB

10. Steam (Vapor) Flowmeters (Vortex-shedding type):

a. The meter system shall consist of a primary flow sensor and transmitter. The flow sensor body and wetted parts shall be SS, and shall be flanged and suitable for the service rating. The meter shall be installed with all necessary grounding components and gaskets per manufacturer's instructions. The transmitter shall be provided with a remote mounting bracket and cable, integral LCD display, NEMA 4X housing, shall indicate flow rate and totalized flow, shall have an isolated 2-wire 4-20 mA linear output flow signal and a pulsed output signal for totalization. The transmitter shall be capable of being field calibrated and reprogrammed from the outside housing via magnetic probe or security protected integral keypad menu switching. Unit electronics shall have noise immunity. Unit shall have the capability to maintain flow total in non-volatile memory. The primary flow sensor and transmitter shall be mounted in accessible locations. The flowmeter shall be provided with a 1-year warranty and application non-degradation performance guarantee. The flowmeter and transmitter as a unit shall have the following minimum characteristics:
1) Temperature range shall be –40 to +750˚F.
2) Accuracy shall be 1.0% of rate and 0.1% of full scale.
3) Repeatability shall be 0.15% of flow rate.
4) Each meter shall be factory calibrated for the specified flow range prior to shipment and specific performance test data shall be furnished with the meter.
5) Meter range shall accommodate the minimum and maximum expected flow for the steam pressure at the installed location.
6) Meter shall be equipped with a temperature and pressure compensation feature.

b. Provide a phenolic tag for each transmitter to identify service and Meter ID number (i.e. MEDIUM PRESSURE STEAM FLOW – LSI BUILDING, etc.).
c. Approved Manufacturers
    1) Rosemount
    2) Krohne
    3) ABB

11. Steam (Vapor) Flow Meters (Differential-pressure type)
a. The meter system shall consist of a differential pressure primary flow element, a differential pressure transmitter (or transmitters), and a flow monitor/computer. The flow sensor body and wetted parts shall be SS, and shall be equipped with 150-lb. flanges. The transmitter(s) and flow computer shall be provided with a remote mounting bracket and cable, integral LCD display, and NEMA 4X housing. Flow computer shall indicate flow rate and totalized flow, shall have an isolated 2-wire 4-20 mA linear output flow signal and a pulsed output signal for totalization. Unit electronics shall have noise immunity. The transmitter shall be capable of being field calibrated and reprogrammed from the outside housing via magnetic probe or security protected integral keypad menu switching. Unit shall have the capability to maintain flow total in non-volatile memory. The flowmeter and transmitter as a unit shall have the following minimum characteristics:
    1) Temperature range shall be -40 to +750°F.
    2) Accuracy shall be 1.0% of rate or better and 0.1% of full scale.
    3) Repeatability shall be 0.15% of flow rate.
    4) Each meter shall be factory calibrated for the specified flow range prior to shipment and specific performance test data shall be furnished with the meter.
    5) Meter range shall accommodate the minimum and maximum expected flow for the steam pressure at the installed location.
    6) Meter shall be equipped with a temperature and pressure compensation feature.
    7) V-cone horizontal pilot lines shall be pitched back to steam lines and shall not trap condensate.
b. Provide a phenolic tag for each meter to identify service and Meter ID number (i.e. MEDIUM PRESSURE STEAM FLOW – LSI BUILDING, FM-1 etc.).
c. Approved Manufacturers
    1) McCrometer (V-cone-style meter)
    2) Preso (Venturi-style meter)
    3) Gerand Engineering (Venturi-style meter)

TWO METHODS OF CALCULATING ENERGY CONSUMPTION (BTUS), WITH THE RESPECTIVE EQUIPMENT REQUIRED, ARE SPECIFIED BELOW: (1) BY THE DDC SYSTEM OR (2) BY A "BTU METER". 12.b IS USED WHEN UTILITY (REVENUE) BILLING OF A SYSTEM IS PLANNED. 12.a IS USED WHEN ENERGY CONSUMPTION IS COLLECTED FOR INFORMATIONAL PURPOSES ONLY. ASSURE THE CONTROL DRAWINGS INDICATE WHICH METHOD, IF ANY, IS TO BE USED FOR EACH SYSTEM.

12. BTU Metering
a. DDC BTU metering shall be accomplished using the following equipment at each metering point:

1) One (1) liquid flowmeter unit with transmitter as specified elsewhere in this section.
2) Two (2) high-precision matched temperature sensor assemblies with transmitters as specified elsewhere in this section. Sensor with SS well shall be installed in each respective supply and return pipe as shown on project drawings.
3) These devices shall be wired to a local DDC panel. Calculations for instantaneous and totalized load shall be incorporated into the panel control code, and the necessary virtual points shall be created to allow remote monitoring and trending via the DDC system.

b. When a BTU meter is indicated on the control drawings, provide a Flow/BTU computer which is programmable for various flow meter types including linear, square law, or multi-point linearization data interpretation.
1) Inputs shall include 4-20ma flow from flow meter, and 4-20ma from two temperature sensors.
2) Flow and temperature inputs shall be simultaneously connected to this computer and looped to the local DDC panel.
3) Flow/BTU computer shall operate in an environment of 0 to 50 C, shall include a keypad for data input and retrieval, and an EEPROM/nonvolatile RAM. Unit shall calculate and provide:
a) Two 4-20ma analog outputs indicating btu, mass or volume flow rate, temperature 1, temperature 2, delta temperature, pressure, density, and peak demand.
b) One isolated pulse output indicating btu, mass or volume total
c) Two NC/NO relay outputs assignable to trip according to various rate, total, temperature or pressure readings Programmable as latching or non-latching, or as pulsed output of a total.
4) Outputs shall be stored in a battery backed data logger, selectable for continuous or periodic log modes.
5) Unit shall have a real time clock and shall date stamp logged data. Unit shall have an RS-232 port and shall be capable of setup from a laptop computer. The supplier shall set up and verify BTU measurement and shall train U of M personnel in all aspects of BTU computer setup and operation.
6) Computer shall calculate and display heat, mass or Volume flow rate, resettable total, non-resettable total, temperature input 1, temperature input 2, delta temperature, density, pressure, peak demand, and time/date stamp.
7) Provide a phenolic tag for each transmitter and flow computer (as applicable) to identify service and ID number (i.e. CHILLED WATER BTU METER – LSI BUILDING, etc.).

8) Mount Flow/BTU computer in a NEMA 4 enclosure: Minimum size 16" (H) x 14" (W) x 8" (D), hinged cover, padlockable latch, and stainless steel hinge. Provide cutout in enclosure face and mount computer in face. Where multiple computers are supplied, they may be mounted in a common enclosure.
9) Approved Manufacturers and Models for Flow/BTU Computer:
a) Kessler-Ellis Supertrol II with MS816 enclosure.

D. Electronic to Pneumatic Transducers

1. Provide transducers to convert electronic signals from the Siemens analog output modules to linear proportional pneumatic signals for all DDC controlled modulating pneumatic devices. The transducer shall be a panel-mounted device, with hand/auto switch, override dial for manual override control, and a 0-30 psig output gauge. Supply voltage shall be 19-26 VAC. Control signal shall be 0-10 VDC or 4-20 mA. Output accuracy shall be 1/4 psig at 75 Deg. F, producing a 0-15 psig pneumatic signal. Output repeatability shall be .05 psig maximum. Transducers shall be high capacity non-bleed devices with a minimum output capacity of 500 SCIM, except special circumstances that require a constant bleed controller with branch exhaust on signal loss.
2. Approved Manufacturers:
a. Non-bleed Type:
1) Siemens
2) ACI - PXP
b. Bleed Type:
1) ACI – PXP

E. Pressure to Electronic Transducers

1. Provide transducers to convert linear proportional pressure signals to interface with the Siemens analog input modules. The transducer shall be a panel-mounted device, with input pressure snubber, as required, and gauge. Supply voltage shall be 19-26 VAC. Control signal shall be 4-20 mA. Accuracy shall be 1 percent full scale. Thermal effect shall be less than 1 percent full scale on zero and less than 1 percent of reading on span. Transducer shall have elastomer seals and SS wetted parts.
2. Approved Manufacturers:
a. Siemens
b. Setra
c. Modus
d. ACI
e. Dwyer

F. Carbon Dioxide Sensors:

1. Carbon dioxide sensing cell shall consist of a non-dispersive infrared carbon dioxide gas cell that uses a pulsed source and has no free air optical path. Output shall be linearized 4-20 mA for use with 24 VDC input. The unit shall be specifically designed for the wall or duct application specified. Duct aspiration boxes shall be by the manufacturer. Unit shall have span adjustment. The unit shall have no moving parts.
2. Minimum requirements:
a. Range: 0-2,000 ppm

b. Accuracy: 3 % of full scale
c. Repeatability: 1% of full scale
d. Power Consumption: less than 3 watts
e. Zero Drift at Constant Temp.: 100 ppm per 24 hrs(random not cumulative)
f. Max. allowable Drift in 1 year: 20 ppm

3. Unit shall not require calibration for a period of 1 year or more.
4. Approved Manufacturers:
   a. Valtronics
   b. Telaire

G. Carbon Monoxide and Combustible Gas Sensors:

1. Sensors shall be a micro-processor-based system for continuous monitoring and use catalytic, electro-chemical, diffusion cell, or solid-state type sensing. Output shall be linearized 4-20 mA for use with 24 VDC input with green LED normal operation indicator. Unit shall provide a SPDT pilot duty low voltage alarm contact with an adjustable set point. The unit mounting shall be wall, duct aspiration, or ceiling to suit application. The unit shall specifically designed for the application and shall be explosion proof, as required. Unit shall have single point set point and span adjustment. The unit shall have no moving parts. Units mounted outdoors shall be waterproof and rustproof.
2. Minimum requirements:
   a. Range: as required for application; ppm, %, % L.E.L.
   b. Accuracy: 3-5% of full scale
   c. Repeatability: 1% of full scale
   d. Power Consumption: 5 watts or less
   e. Relay contact rating: 5 amp at 24 VDC, 150 VA max. inductive
   f. Zero Drift at Constant Temp.: 0 per 24 hrs (random not cumulative)
   g. Max. allowable Drift in 1 year: 1% of full scale.
3. Approved Manufacturers:
   a. Draegar
   b. Vulcain

H. Current Sensing Relays

1. Provide current sensors with donut transformers capable of monitoring AC current, maximum input current ranges from 20 to 300 amp, peak, with digital output signals having adjustable high and low current trips. An LED shall provide visual indication and shall not bleed through.
   a. Provide special current sensing relays designed to monitor belt breakage, when indicated or described in the Sequence of Operation.
2. Approved Manufacturer:
   a. Neilsen Kuljian
   b. Veris Industries

I. Liquid Detectors

1. Liquid detectors shall utilize microchip technology for detection of conductive liquids through one of the following types of sensors: gold-plated probes, self-adhesive sensor tape with copper electrodes and durable cotton cover, or rope type sensor. Detectors shall be selected based on the best use for the application. Power requirement shall be 11-27 VAC or VDC and have a green LED normal operation indicator. Unit shall have a SPDT pilot duty low voltage alarm contact. Unit shall be waterproof and rustproof. A red LED shall indicate the presence of liquid. Unit shall have an adjustable set point.
2. Approved Manufacturers:
   a. R. E. Technologies, Inc
   b. Water Alert

2.4 ELECTRONIC ROOM TEMPERATURE CONTROLLER- FAN COILS (FCU) AND CABINET UNIT HEATERS (CUH)

A. Room Temperature Controller:

1. UL listed programmable electronic room temperature controller with LCD display, for two position and modulating control of 2 or 4 pipe FCU/CUHs, with the following features (Fan speed relay board and control transformer are provided with the controlled equipment. Coordinate with equipment manufacturer and assure controller is compatible with relay board. Provide additional components to make compatible if required.):
   a. Two part controller consisting of plastic base plate and detachable plastic controller housing, white color. The base shall include screw terminals to allow all wiring to be terminated on the base, as opposed to directly on the controller. The controller housing shall mechanically and electrically engage the base and shall include all electronics and a built-in room temperature sensor.
   b. LCD display shall display the measured room temperature in °F.
   c. Control shall be by room temperature sensing. Provide return air sensor where indicated as required.
   d. Outputs for on/off or modulating valve actuator and three-speed fan control.
   e. Fan Speed Selector Switch or Button: Three-position switch that allows occupant to select high, medium, or low fan speed. When setpoint dead-band is exceeded, the controller shall open the two position control valve and turn on the fan at the speed selected by the three position switch.
      1) If controlling single speed equipment, jumper controller so that regardless of fan switch position, controller turns on fan when setpoint dead-band is exceeded.
   f. Setpoint Adjustment Buttons: The controller face shall provide an “up” setpoint adjustment button and a “down” setpoint adjustment button, to allow occupant adjustment of setpoint.

g. It shall be possible to set the fan control for either continuous fan operation independent of room temperature, or for the fan to turn on and off dependent on room temperature.

NOTE THE AUTOMATIC CHANGEOVER MODE DESCRIBED BELOW. IF A MFR. OTHER THAN SIEMENS IS SPECIFIED FOR 2-PIPE HEATING/COOLING APPLICATIONS, PIPING AT THE FAN COIL WILL NEED TO BE CONFIGURED WITH A SMALL BYPASS TO ASSURE CONTROLLER SENSES THE CURRENT 2-PIPE SYSTEM WATER TEMP. SIEMENS IS THE ONLY KNOWN MFG. WHERE THE CONTROLLER HAS A PURGE FUNCTION, WHICH AVOIDS THE NEED FOR A PIPE BYPASS.

h. Automatic Changeover Mode (two pipe fan coils): the controller shall detect if the system is in heating or cooling mode by measuring the system water temperature at the fan coil and automatically switching the controller to heating or cooling control mode. An icon on the controller LCD shall indicate which mode the system is in, heating or cooling. Provide a strap-on-pipe temperature sensor device wired to the controller, for measuring system water temperature. The controller shall also include a purge mode function to assure proper acquisition of system water temperature by the strap-on sensor. Purge mode function shall open the fan coil 2-way control valve (for an adjustable time period) at two hour intervals if the control valve has remained closed during that interval.

i. The controller shall provide the following setpoint modes:
   1) Normal Mode: Controller maintains the heating and cooling occupant adjustable setpoint.
   2) Standby Mode: Controller maintains standby heating and cooling setpoints. Not occupant adjustable.
   3) Economy Mode: Controller maintains set-back/set-up heating and cooling setpoint; activated by a remote contact closure wired to a status input on the controller. Not occupant adjustable.

j. Standby Switch or Button: the controller face shall include a standby switch or button that allows the occupant to activate stand-by mode by a single key stroke.

k. Operating Voltage: 24 VAC.

l. Power Consumption: 8 VA maximum.

m. Output Rating: 3 amp minimum, each output, higher if required for control valve or fan operation.

n. Output Action: Selectable normally open or normally closed.

o. Control Deviation Including Sensor Inaccuracy at 77 °F: ± 1 °F maximum.

p. Programmable Features: It shall be possible to program the following controller functions. Programming mode shall be accessible via either a password or by non-intuitive button activation sequences.
   1) Minimum Setpoint Limitation in Normal Mode: Adjustable 41 °F to 68 °F.
   2) Maximum Setpoint Limitation in Normal Mode: Adjustable 70 °F to 95 °F.
   3) Heating Setpoint, Economy Mode: Adjustable 41 °F to 68 °F or “off”.

4) Cooling Setpoint, Economy Mode: Adjustable 70 °F to 95 °F or "off".
5) Heating Setpoint, Standby Mode: Adjustable 41 °F to 68 °F or "off".
6) Cooling Setpoint, Standby Mode: Adjustable 70 °F to 95 °F or "off".
7) Heating/Cooling Changeover (2-pipe) Cooling Switch Point: Adjustable 50 °F to 77 °F.
8) Heating/Cooling Changeover (2-pipe) Heating Switch Point: Adjustable 81 °F to 104 °F.
9) Switching differential for heating and cooling.
10) Purge function active or inactive.
11) Purge function time duration.
12) Fan Control in the Economy Mode: On or off.
13) Output Minimum "On" Time and "Off" Time: Adjustable 1 minute to 120 minutes.
14) Other parameters as required to meet the requirements of this specification and the control sequence of operation.

2. Warranty: 2 year unconditional parts and labor warranty and 5 year unconditional warranty for all parts including sensors.

NOTE THAT AS OF 6/2010 SIEMENS MODEL RDF WAS NOT AVAILABLE WITH A MODULATING OUTPUT FOR 4-PIPE CONTROL. RDF FOR 2-PIPE IS AVAILABLE FOR EITHER MODULATING OR 2-POSITION CONTROL, MODEL NUMBER FOR MODULATING CONTROL IS GIVEN. REVISE TO RDF-10 IF 2-POSITION CONTROL IS DESIRED. NOTE THAT THESE ARE ONLY PARTIAL MODEL NUMBERS. RDF CONTROLLERS ARE AVAILABLE FOR A WIDE RANGE OF OTHER APPLICATIONS (E.G. W/ELECTRIC HEATING), CONSULT SIEMENS.

3. Approved Manufacturers for Two Pipe Units:
   a. Siemens Model RDF 50 (modulating control).
4. Approved Manufacturers for Four Pipe Units:
   a. Siemens Model RDF 30 (2-position control).

2.5 DDC TERMINAL EQUIPMENT CONTROLLERS (TEC) AND RELATED ROOM TEMPERATURE SENSOR (RTS)

A. U-M will furnish application specific DDC TECs and RTSs. U-M will also provide any required output modules, including auto-zero modules. RTS shall have a digital temperature display, set point button, override button, and a temperature range of 55-95 deg. F. Other devices shall be furnished by the equipment manufacturer or by the MSCC. Coordinate to provide a complete operating package in accordance with the sequence of operation requirements. TECs shall be connected to the Siemens DDC control panel controller FLN of the AHU or system being served by the MSCC. The MSCC may send TECs to the equipment manufacturer for factory mounting, or may field mount the TECs, at his option.

1. TECs shall be provided with metal enclosure, complete with conduit knockouts (enclosure provided by MSCC).

B. Power to TECs and associated controlled devices shall be 24 VAC, provided by the MSCC.

C. Approved Manufacturers:

1. Siemens

2.6 ELECTRIC COMPONENTS

A. Components shall be Honeywell, Johnson, or Siemens, unless listed otherwise.

B. Low temperature detection thermostats shall be duct type, fixed 5 deg. F differential, range 30 to 60 deg. F. Sensing element shall have a 20-foot long capillary tube responding to the lowest temperature sensed along any 12 inches of bulb length. Switch shall be SPDT 120 VAC, UL listed, rated for 10 amps at 120 VAC full load. Unit shall be manually reset. Provide one thermostat for every 20 square feet of coil surface.

C. High temperature detection thermostats shall be two-position type, range and element shall be suitable for the service, single or double pole, normally open or normally closed as required. Set point shall be adjustable over the full range. Switch shall be UL listed, rated for 10 amps at 120 VAC full load. Unit shall be manually reset.

D. Immersion electric thermostats shall be two-position type, range and element shall be suitable for the service, single or double pole, normally open or normally closed as required, with stainless steel separable well. Set point shall be adjustable over the full range. Switch shall be UL listed, rated for 10 amps at 120 VAC full load.

E. Remote-bulb electric thermostats shall be two-position type, range and element shall be suitable for the service, single or double pole, normally open or normally closed as required, with stainless steel separable well as required. Set point shall be adjustable over the full range. Switch shall be UL listed, rated for 10 amps at 120 VAC full load.

F. Wall-mounted electric thermostats shall be two-position type, range and element shall be suitable for the service, single or double pole, normally open or normally closed as required. Set point shall be adjustable over the full range. Switch shall be UL listed, rated for 10 amps at 120 VAC full load.

G. Strap-on electric thermostats shall be two-position type, range and element shall be suitable for the service, single or double pole, normally open or normally closed as required. Set point shall be adjustable over the full range. Switch shall be UL listed, rated for 10 amps at 120 VAC full load.

H. Differential Pressure Switches:

1. Shall provide electrical switching action upon a sensed pressure differential increase between two points. Sensitivity shall be suitable for the application. Set point shall be adjustable over the full range of the device. Switching action shall SPDT. Electrical switch rating shall be 10 amps at 120 VAC, minimum.
2. Pressure rating of switch and connecting tubing:
   a. Fan - Rated for 12 inches WC.
   b. Pump – Maximum deadhead system pressure.
3. Switches used for safety shutdown applications shall be of the manual reset type.
4. Approved Manufacturers:

a. Honeywell
b. Siemens
c. Dwyer
d. Cleveland Airflow

I. Limit Switches:

1. Limit switches shall be oil tight type with appropriate operator to provide required function.
2. Approved Manufacturers:
   a. Honeywell
   b. Siemens
   c. Allen-Bradley
   d. GE
   e. Square D

J. Control Relays and Contactors:

1. Relays shall be a minimum DPDT, of proper coil voltage, with neon indicator light, and of sufficient rating for specified purpose. Relay base shall be of the screwed terminal type.
2. Contactors shall be definite purpose type, have adequate number of poles, of proper coil voltage, and of sufficient rating for specified purpose. Contactors used for DDC interface control shall contain a Hand-Off-Auto switch.
3. Approved Manufacturers:
   a. Dayton
   b. Siemens
   c. Allen-Bradley
   d. GE
   e. Square D

K. Selector Switches:

1. Switches shall be multiple position type, oil-tight, water-tight, dust-tight, have the adequate number of contact blocks, capable of additional contact blocks, and of sufficient rating for specified purpose. Nomenclature plate shall be provided with appropriate wording, units, etc.
2. Approved Manufacturers:
   a. Dayton
   b. Siemens
   c. Allen-Bradley
   d. GE
   e. Square D

L. Push Buttons and Pilot Lights:

1. Push button switches and pilot lights shall be, oil-tight, watertight, dust-tight, have the adequate number of contact blocks, capable of additional contact blocks, and of sufficient rating for specified purpose. Nomenclature plate shall be provided with appropriate wording, units, etc.
2. Pilot lights shall be neon or LED, push-to-test type with replaceable lens. Lens shall be of the appropriate color for application served.
3. Approved Manufacturers:
   a. Dayton
   b. Siemens
   c. Allen-Bradley

d. GE
e. Square D

M. Fuse Holder/Disconnects:

1. Fuse holder/disconnects shall be provided for all control circuits inside auxiliary control panels, and shall be of appropriate size/type for service.
2. Approved Manufacturers:
   a. Little Fuse
   b. Dayton
   c. Buss
   d. GE

N. Terminal Blocks:

1. Terminal blocks shall be modular, barrier type, direct mount, single pole, and snap together to any required number of poles. Units shall be rated for 300 volts, 20 amp., handle wire sizes from 22-12 AWG, and have a marking strip for identification.
2. Approved Manufacturers:
   a. Little Fuse
   b. Dayton
   c. Buss
   d. GE

O. Toggle Switches:

1. A toggle switch shall be provided for every auxiliary and local control panel that utilizes a 120 VAC power source as a means to turn off the power to that panel and shall be of appropriate size/type for service. Toggle switches shall be rated 120/277 volts, 20 amps, SPDT, specification grade, extra-heavy duty, back and side wired, with brown handles.
2. Approved Manufacturers:
   a. Leviton
   b. Pass & Seymor
   c. Hubbell
   d. Arrow Hart
   e. Bryant

2.7 ELECTRICAL ACCESSORIES

A. Wiring and Conduit

1. The MSCC shall provide all DDC and related control wiring, conduit, and J-hook cable hanging system. Wire and cable shall be pulled from device or control point to the DDC, Auxiliary, UPS, or LPI panels and run between DDC, Auxiliary, UPS, or LPI panels, with 6'-0" spare coiled at the panel. All wire and cable shall be labeled and tagged 4 inches down from the point at which the wire enters the cabinet with the corresponding point number.
2. All wiring carrying voltages greater than 24 volts shall be run in conduit.
3. All wiring carrying voltages 24 volts nominal or less shall be run as follows:

a. Wiring routed in shafts, walls, below grade, and in any concealed or inaccessible space, or above ceilings requiring the use of a tool to access or held in place by clips or similar devices: run wiring in conduit.
b. Wiring routed in exposed locations such as mechanical and electrical rooms or in rooms without ceilings (i.e. exposed to deck above): run in conduit.
c. ALN wiring: run in conduit.
d. Wiring above accessible lay-in ceiling areas: Utilize J-hook hangers.
    1) Provide UL Listed zinc electro-plated steel or plastic J-hooks, sky blue color, plenum use approved, with minimum 1-inch wide cable support area, rated for the cable type being supported. Provide with integral cable retainer strap to provide containment of cables within the hanger.
    2) Install J-hooks with J-hook bottoms a minimum of 10 feet A.F.F. and no less than 2 feet above the ceiling.
    3) Space hangers at maximum 5 foot intervals, with additional hangers located a maximum of 3 feet from both sides of any change in direction. Wiring shall not sag more than 12 inches between J-hooks. Install wiring and J-hooks in a neat and workman-like manner, routed parallel or perpendicular to the building column lines.
    4) Install to protect wire from damage and to allow for wire replacement. Do not exceed 50 % of the wire capacity specified by the J-hook manufacturer (first installation), or route control wiring in non-control-wiring J-hooks.
e. Wiring to wall mounted devices such as room sensors, switches, and similar devices: Route wiring in wall in minimum 1/2 inch conduit. Stub conduit up/down into accessible ceiling space, terminating conduit with a 90 degree bend and a strain relief to prevent wire damage. Install wall box for device mounting.
f. Wiring to perimeter radiation valves and similar control devices requiring wiring to be routed in walls: Route wiring in wall in minimum 1/2 inch conduit. Stub conduit up/down into accessible ceiling space, terminating conduit with a 90 degree bend and a strain relief to prevent wire damage. Provide maximum 12 inch long flexible metal conduit for the final connection to the device.

4. Conduits shall be sized on a maximum fill of 40% capacity.
5. Four separate conduit systems shall be provided:
    a. DO/DI and 120 VAC control wiring.
    b. AO/AI wiring.
    c. Pneumatic tubing.
    d. ALN/FLN cables.

    Exception: DO’s, DI’s, AI’s, and AO’s (including pneumatic tubing) installed between VSD’s and DDC panels may share the same conduit.
6. All junction boxes and couplings on conduit containing DDC related wiring or pneumatic tubing shall be painted sky blue color. Alternative: Allied Tube True Color® EMT, color blue, may be used in lieu of painted fittings and junction boxes.

7. Data transmission cabling and equipment grounding procedures shall meet the latest FCC guidelines for electromagnetic field generation.
8. All control wiring sizes and types shall meet the equipment manufacturer's recommendations.
9. DDC Wiring and Cable Requirements:
    a. Digital Output: Minimum #14 AWG THHN
    b. Digital Input: Teflon jacketed twisted pair #16 -or- #16 AWG THHN minimum
    c. Analog Output: Twisted pair NEC-rated CMP #20 AWG
    d. Analog Input: Twisted pair NEC-rated CMP #20 AWG
    e. Data Transmission: Teflon jacketed twisted shielded pair #22 AWG 12-1/2 pico-ferrad, 6 twists/foot, with 22 AWG ground wire.

    All wire sizes listed are for lengths up to 750'.
10. All control wiring shall have insulation rated for 300 volts minimum, and be installed per NEC requirements. Exposed wiring running in return plenums, air handling devices, and where required by code shall be plenum rated.
11. FLN wiring insulation outer jacket color shall be sky blue.
12. TEC Wiring Requirements:
    a. Provide all necessary 24 VAC transformers, 24 VAC power distribution wiring, etc. to TECs for a complete operating system. Transformers shall have primary and secondary fuse protection and shall be mounted in an electrical closet, auxiliary panel or other suitable accessible location with disconnecting means. Provide a pilot light for each transformer, to indicate the presence of load power.
    b. Terminal fittings or insulating bushings shall be used to protect wiring associated with TECs at enclosures, junction boxes, etc.

B. Provide all necessary 24 VAC transformers, 24 VAC power distribution wiring, etc. for a complete operating system. Transformers shall have primary and secondary fuse protection and shall be mounted in an electrical closet, auxiliary panel or other suitable accessible location with disconnecting means. Provide a pilot light for each transformer, to indicate the presence of load power.

C. Provide conduit and wiring to power all 120 VAC control accessories such as flow meters, BTU meters, and actuators. Feed this power from an auxiliary control panel, with a separate disconnect and fuse, located in the auxiliary panel.

D. For TEC’s, provide 120 VAC conduit and wiring between electrical panels and TEC power supply transformers.

2.8 AUTOMATIC CONTROL VALVES AND ACTUATORS

A. General:

1. With the exception of TECs, actuators shall be pneumatic unless specifically noted otherwise on the drawings.

2. Valve bodies 2 inches IPS and smaller shall be single seated bronze, and shall have screwed end connections. Valve bodies 2-1/2 inches IPS and larger shall be cast iron, and shall have flanged end connections. Valve stem packing shall be tetrafluorethylene, spring-loaded, self-adjusting. Packless construction is acceptable. Valve linkage shall have an adjustment for valve lift. Valve to have rising stem, renewable seat and disc, repackable under pressure.
3. Valve rangeability shall be no less than 50:1 for valve $C_v \leq 1$, no less than 100:1 for valve $C_v > 1$.
4. When indicated, provide separate SPDT limit switches which actuate at the full open and full closed valve position.

B. High performance butterfly valves may be used when approved for valves 2-1/2" and larger and shall be full lug, have carbon steel body, 316 stainless steel offset disc, one-piece stainless steel shaft and bearings with thrust surfaces, PTFE seat, Teflon stem packing and rated for 150 psi and 450 degrees F, and in compliance with Related Section "Valves".

STEAM CONTROL VALVES: REVISE THE VALVE PRESSURE DROP SPECIFIED BELOW TO THAT APPROPRIATE FOR YOUR PROJECT. FOR EXAMPLE, FOR LOCATIONS CLOSE TO THE CENTRAL POWER PLANT, A PRESSURE DROP HIGHER THAN THE INDICATED 4 PSIG WOULD BE APPROPRIATE. ALSO NOTE THAT THE BELOW VALVE SIZING CRITERIA ASSUMES THAT THE STEAM PRESSURE REQUIREMENT FOR THE EQUIPMENT SERVED BY THE CONTROL VALVE IS 1 PSI OR LESS. ALWAYS VERIFY THE EQUIPMENT PRESSURE REQUIREMENT AND MODIFY THE BELOW ACCORDINGLY.

C. Steam valve bodies and trim shall be rated for scheduled saturated steam service pressures. Steam valve replaceable plugs and seats shall be stainless steel, hardened to not less than 500 Brinnel. Valves shall have modified linear characteristics and shall be sized based on a 5 psig inlet pressure and a maximum drop of 4 psig.

ALTHOUGH AVAILABLE UP TO 4", BALL VALVES SHOULD TYPICALLY ONLY BE USED FOR SMALL CONTROL VALVE APPLICATIONS, E.G. FAN COILS. THIS SPECIFICATION IS ONLY FOR BALL VALVES UP TO 3/4" DIAMETER. DESIGNER SHALL SPECIFICALLY NOTE ON THE DESIGN DRAWINGS WHERE BALL STYLE CONTROL VALVES WITH ELECTRIC ACTUATORS ARE TO BE USED. BE AWARE OF THE MAXIMUM DIFFERENTIAL PRESSURE RATING (E.1.H) FOR THESE TYPE VALVES. NOTE THAT THE MINIMUM FLUID TEMP. RATING IS 35˚F; THIS BALL VALVE SPEC IS NOT SUITABLE FOR LOW TEMP SERVICE, HOWEVER LOW TEMP TRIM IS AVAILABLE, CONSULT MFR.S.

D. Ball Style Control Valve and Actuator Assembly (permitted only where specifically noted on the design drawings):

1. Control Valve Body: Quarter turn ball valves, 2-way and 3-way configuration as indicated, for 2 position or modulating service, with the following features:
   a. 1/2" or 3/4" valve size.
   b. Forged brass body with female NPT end connections.
   c. Nickel or chrome plated brass ball, with Teflon reinforced EPDM O-ring seals.
   d. Blow-out proof brass stem with double O-ring EPDM seals.

e. Shall provide safe and reliable operation in water or in up to 50% glycol/water solutions, at fluid temperatures between 35°F and 212°F and static pressures up to 300 psi.
f. Ball and stem seals shall be formulated to prevent degradation by typical water treatment chemicals and Chloramines.
g. Minimum close-off rating: 200 PSI.
h. Differential pressure rating (valve operating): 30 PSID maximum.
i. Downstream leakage: maximum of 0.01% of design flow at rated close-off differential pressure.
j. 0 – 90 degree angle of rotation.
k. Valves for modulating service shall be equipped with a characterized ball (glass filled polymer flow insert) that provides an equal percentage flow characteristic.
l. Valves for two position control shall be reduced port type as required for the appropriate valve Cv.
m. Provide valves with the flow coefficient indicated, or if not indicated, subject to engineer's approval, with a Cv appropriate for good control and considering the system differential pressure available.

2. Actuators: UL listed electronic rotary actuator designed for operation with the ball type control valve, with the following features:
a. The actuator shall be of the same manufacturer as the valve body and shall be integrally mounted to the valve at the factory.
b. For direct coupling to the valve shaft without the use of linkages, to an ISO-style mounting pad.
c. Minimum cycle life: 60,000 full strokes at maximum rated torque.
d. Torque: as required for smooth positioning and closure of the valve against a maximum differential pressure of 30 PSI and to provide close-off up to 200 PSI.
e. Motor runtime to rotate the valve ball 90°: 90 seconds maximum, 20 seconds minimum.
f. Spring return runtime to rotate the valve ball 90°: 90 seconds maximum, 20 seconds minimum.
g. For use with a 24VAC power supply with the ability to operate off the same power supply required for the temperature controller.

MODIFY THE NEXT TWO PARAGRAPHS TO MATCH THE CONTROL TYPE (MODULATING OR TWO POSITION) AND FAILURE MODE REQUIRED. THE PARAGRAPHS AS WRITTEN ARE TYPICAL FOR USE WITH SIEMEN'S "RDF" ELECTRONIC ROOM CONTROLLERS AVAILABLE AS OF 6/2010; THESE CONTROLLERS NOT AVAILABLE AS MODULATING FOR 4-PIPE FAN COILS.)

h. 2-pipe fan coils: Normally open spring return actuation, for use with 0-10Vdc output proportional plus integral room controllers, fully compatible with the specified temperature controller.
i. 4-pipe fan coils: For use with 2 position output room controllers, fully compatible with the specified temperature controller.
1) Heating coil: Normally open spring return actuation.
2) Cooling coil: Normally closed spring return actuation.

j. Electronic stall detection/overload protection. Actuator shall sense that maximum rotational position has been reached even when control signal is still applied and stop rotating prior to actuator damage.
k. Rotation mechanically limited by adjustable integral limit stops.
l. Mechanical range adjustment.
m. Valve position indicator.
n. Actuator/actuator housing: Brushless DC motor design, NEMA type 1 or 2 enclosure, die-cast aluminum alloy or UL 94 listed plastic housing, lubricated gears, with a thermal barrier to prevent condensation on the actuator parts when used for chilled water applications. It shall be possible to rotate the actuator to any of four rotational angles in 90° increments, relative to the valve body.
o. Ambient temperature operating range: -20°F and 120°F.
p. Maximum actuator noise level, running or spring return: 40 dBA.

3. 2 year unconditional warranty, parts and labor. 5 year unconditional parts warranty.
4. Approved Manufacturers:
a. Siemens
b. Johnson Controls
c. Belimo

E. Hydronic system valve bodies and trim shall be rated for service pressures through 125 psig at 250 deg. F, globe style. Hydronic system valves shall have replaceable plugs and seats of SAE 72 brass or AISI 300 series stainless steel, selected for maximum lift under application conditions. Maximum pressure drop across any hydronic system valve at maximum flow and valve size shall be as indicated. Two-way valves shall have equal percentage characteristics for heating and cooling applications, either linear or equal percentage for other applications as appropriate, linear for three-way valves. When not indicated, valves shall be sized for a pressure drop of 3 psig for chilled water and 4 psig for hot water.

F. Standard Valve Actuators:

1. Pneumatic, rolling diaphragm, spring loaded, piston type.
2. Spring range shall be as required for non-overlapping sequencing or as indicated on drawings.
3. Ratio relays or cumulators used for sequencing valves are not acceptable unless specifically indicated on the drawings.
4. Valves shall spring return to normal position as indicated.
5. Select with sufficient close-off power for system pressure, pump shut off head, highest operating torque, and torque requirements of valves that may stick because of infrequent use.
6. Select to provide smooth proportioning control under operating conditions normal to the system.

G. Butterfly Valve Actuators:

1. Pneumatic actuators shall be rotary type with rack and pinion to provide constant output torque rated for at least 125 percent, pilot positioner with gauges, spring return, adjustable travel stops, factory tested, factory lubricated, self-draining body, integral pneumatic parting, localized mechanical position indicator readable at 25 feet, 0-90 deg. reversible operation, capable of operating in any valve mounting attitude, capable of being mounted in line or transverse to pipeline, and bolt directly to valve top plate. Valves shall be actuated with 60-psig air and 3-15 psig pilot service. Valves used for isolation do not require pilot positioners. Actuator shall include a manually operated hand wheel for manual override.

EDITOR: WHEN THE USE OF ELECTRIC ACTUATORS IS PLANNED THE METHOD OF GETTING POWER TO THOSE ACTUATORS MUST BE CONSIDERED. READ THE BELOW SPEC SECTION CAREFULLY AND NOTE THE SIZE RANGE FOR VARIOUS ACTUATOR VOLTAGES. THE CONTROLS CONTRACTOR SHALL NOT RUN POWER WIRING ABOVE 120V. THEREFORE:

FOR 120V ACTUATORS, POWER TO SUCH ACTUATORS IS THE RESPONSIBILITY OF THE CONTROLS CONTRACTOR AND IS TO BE ROUTED FROM THE DDC AUXILIARY PANEL (SEE SECTION 2.5). IF YOUR PROJECT HAS A LARGE NUMBER OF 120V ACTUATORS THE STANDARD (2) 20 AMP CIRCUITS RUN TO THE DDC AUX. PANEL MAY NOT BE ENOUGH. DETERMINE THE TOTAL AMPERAGE OF SUCH ACTUATORS AND DIRECT THE ELECTRICAL DESIGNER TO DESIGNATE ADDITIONAL 120V CIRCUITS TO THE DDC AUX. PANEL, IF REQUIRED.

FOR 208V OR 480V ACTUATORS, POWER TO THE ACTUATORS SHALL BE DESIGNATED AS THE RESPONSIBILITY OF THE ELECTRICAL CONTRACTOR. FOR THESE HIGH VOLTAGE ACTUATORS, DIRECT THE ELECTRICAL DESIGNER TO INDICATE POWER TO EACH ACTUATOR ON THE ELECTRICAL DRAWINGS. THIS POWER SHALL NOT BE RUN OUT OF OR THROUGH THE DDC AUXILIARY PANEL.

2. Electric actuators shall have permanent split capacitor, reversible electric motor which drives a compound epicyclic gear, thermal overload protection, factory tested, factory lubricated, localized mechanical position indicator readable at 25 feet, 0-90 degree reversible operation, bolt directly to valve top plate. Housing shall be weatherproof and suitable for outdoor location. Provide thermostatically controlled heater for prevention of condensation at low temperatures. Actuator voltage shall be 120 VAC through 12” and 208 or 480 VAC above 12”. 120V actuators shall be fed out of the auxiliary panel with a separate disconnect and fuse. Disconnect and fuse to be located in the auxiliary panel. 208V or 480V actuator power shall be provided to 208/480V actuators by others. In all cases the MSCC shall provide the required control wiring to the actuators. Actuator ambient temperature range shall be -20 deg. F to +140 deg. F. Actuator shall include a manually operated hand wheel for manual override of the valve position.

H. Electronic valve actuators used with TECs shall be 24 VAC and use 3-position floating control, 7/32" (5.5 mm) stroke minimum, shall be direct-coupled to valve bodies without the use of tools, shall have sufficient power to prevent valves from lifting off their seats, shall provide visual position indication, shall include manual override knob, and shall be UL-listed for plenum installations. Actuators shall be fail-safe or fail-in place as follows:

1. Actuators shall be fail-safe open for perimeter heating applications.
2. Actuators shall be fail-in-place for reheat control valves and cooling coil valves.

I. Typical valve body/actuator control actions shall be as follows:

1. Heating coil valves (non-vivarium) shall be normally open to flow through the coil.
2. Heating coil valves (vivarium) shall be normally closed to flow through the coil.
3. Heat exchanger valves (steam or water) shall be normally open to flow through the heat exchanger.
4. Cooling coil valves shall be normally closed to flow through the coil.
5. Humidifier valves shall be normally closed to flow through the humidifier.
6. Condenser water valves shall be normally open to flow through the cooling tower.
7. Isolation valves shall be normally open.
8. Drain valves shall be normally closed.

J. Approved Manufacturers:

1. All control valves except butterfly type:
   a. Siemens
   b. Honeywell
   c. Johnson
2. High performance butterfly valves:
   a. Jamesbury - 815L
   b. Watts - QF series X
   c. Dezurik – BHP
   d. Xomox Pliaseal
   e. Bray – Braylok Series 41

CONTROL DAMPERS SHALL BE SCHEDULED ON THE DRAWINGS. INDICATE THE DAMPER STATIC PRESSURE AND VELOCITY RATING IN THE SCHEDULE.

2.9 AUTOMATIC CONTROL DAMPERS

A. Multi-blade type. Provide with parallel blades for two-position, throttling, and modulating service unless noted otherwise. Provide required drive axles, linkage, jackshafts, and accessories for proper damper operation. Damper blades, frames, linkages, jackshafts and other parts of the damper actuation system shall not distort or rack during operation. Dampers shall close tightly, and operate in a smooth, hesitation and slack-free manner over the entire range of travel, at the maximum air pressure and velocity at the mounting location. Additionally, multiple section dampers shall operate in unison section-to-section.

B. Face and bypass dampers shall each be capable of passing 100% of unit rated CFM. Pressure drops shall be approximately the same in either extreme position, including the pressure drops of coils and bypass components.

C. All automatic control dampers shall conform to these specifications, including those provided by equipment manufacturers.

D. All control dampers shall be low leakage type and shall meet the following minimum requirements:

1. Leakage: 6.0 CFM/sq. ft. max. at 3" WC.
2. Frames: 13 gauge (minimum) galvanized steel, minimum 2 inch in frame depth, welded or riveted with corner reinforcement.
3. Blades: 16 gauge (minimum) galvanized steel or aluminum airfoil type, maximum blade size 8 inches wide, 48 inches long. Axles and axle extensions shall be minimum 1/2 inch solid galvanized steel. Dampers which are required to have a static pressure rating over 4” WC shall have minimum 3/4 inch solid galvanized steel axles/axle extensions.
4. Blade Seals: Synthetic elastomeric or neoprene, inflatable type, mechanically attached, field replaceable.
5. Jackshafts: Provide to drive adjacent vertical sections of multiple damper assemblies to ensure uniform operation. Minimum 3/4 inch solid or 1” hollow (minimum 1/8 inch wall thickness) galvanized steel. Where jackshafts penetrate air handling casing walls, provide greasable ball bearing supports sleeved and sealed to prevent casing leakage. Provide intermediate greasable ball bearing supports bolted to damper frames for jack shafts extending across multiple damper sections.
6. Jamb Seals: Stainless steel.
7. Bearings: Oil impregnated sintered bronze or lubricant free, solid stainless steel. Provide thrust washers at bearings for all dampers that are to be mounted with blades in the vertical position.
8. Linkages: Deflection and slack-free. Zinc plated, fully exposed, connected to blade faces (located in the air stream). Linkages may be located in-jamb for single damper flange mounting arrangements, provided linkage is external to the duct and easily accessible for maintenance.
9. Static pressure Rating: As scheduled on the drawings, or provide dampers rated for the maximum pressure to be encountered at the mounting location but not less than 4" WC.
10. Velocity Rating: As scheduled on drawings, or provide dampers rated for the maximum velocity to be encountered at the mounting location.
11. Temperature Limits: -40 to 200 deg. F.
12. Provide through-bolted connections for connecting axle or jackshaft extensions. Set screw arrangements are not allowed.
13. Selection and sizing criteria: Damper selection and sizing shall be based on damper schedule shown on the drawings. For dampers that are not scheduled on the drawings, selection and sizing shall be based on the procedure contained in Engineering Manual of Automatic Control, Honeywell, Inc., 1988.

E. For dampers located in stainless steel ductwork, PVC coated ductwork, fume hood exhaust ductwork, and exhaust fan outside air bleed-in ductwork, fabricate and size as indicated above, with the following additional requirements:

1. Frames, blades, blade axles and extensions, blade seals, jackshafts, linkages, and all other components exposed to the airstream: Type 316 stainless steel.
2. Bearings: Solid stainless steel.
3. Damper operators shall be mounted outside of air stream. Extend damper axles and jackshafts to permit mounting outside of air stream.

F. Approved Manufacturers:

1. Honeywell
2. Ruskin
3. Vent Products
4. American Warming & Ventilating
5. Arrow United Industries
6. White Environmental
7. Johnson Controls

2.10 DAMPER OPERATORS

A. General:

1. With the exception of TECs, operators shall be pneumatic unless specifically noted otherwise on the drawings.
2. Provide smooth, proportional control with sufficient power for air velocities 20% greater than maximum design velocity and to provide tight seal against maximum system pressures. Provide spring return to normal position. Damper operators shall be installed in accessible locations. Damper operators shall not be installed inside ducts or air units that convey hazardous exhaust.

B. Pneumatic Operators: Rolling diaphragm piston type with 8-13# spring range, as indicated on drawings, or as required to achieve specified performance.

C. Electric Operators: Maintenance free electric actuator, reversible, with push rod and bracket for swivel mounting and for the transmission of power. Synchronous motor with load independent running time providing parallel operation of several operators. Gear train with low noise level. Magnetic hysteresis coupling with magnetic transmission of torque, with no mechanical contact between the coupling members. The actuator shall be safe against blocking and overload proof even when operated continuously.

D. Electronic Operators: Maintenance free, 24 or 120 VAC, 4-20 mA or 0-10 VDC input, reversible, direct-drive or push rod and bracket, metal or aluminum housing, brushless DC motor with stall protection, quiet, low-power operation, have visual position indicator, and manual override.

E. Electronic damper operators used with TECs shall be 24 VAC 3-position floating control type and utilize a 90-degree rotation. Operators shall be direct-drive, have sufficient power to operate the damper against system pressures, provide visual position indication, have manual override, and shall be UL-listed for plenum installations. Operators shall be of the fail-in-place type.

F. Provide operator mounting brackets. Provide devices to connect operator drive shafts to dampers, damper linkages, and jackshafts.

G. Quantity of operators: Provide a sufficient number to achieve unrestricted movement throughout damper range, such that one operator does not operate more than the maximum square footage of damper area as recommended in standard catalog of manufacturer. Provide sufficient number so dampers close tightly, operate in a smooth, hesitation and slack-free manner over the entire range of travel at the maximum air pressure and velocity at the mounting location, and so that multiple section dampers operate in unison section-to-section.

H. Approved Manufacturers:

1. Honeywell
2. Johnson
3. Siemens
4. Belimo

2.11 PNEUMATIC COMPONENTS

A. Components shall be Honeywell, Johnson, or Siemens, unless listed otherwise.

B. Electric-pneumatic relays shall be two-position, have a metallic body, can be field or panel mounted, have a 120 VAC coil, and 3 or 4 ports. Only Johnson E.P. relays are acceptable.

C. Pressure-electric switches shall be two-position, appropriate range and element, suitable for the service, single or double pole, normally open or normally closed as required. Set point shall adjustable over the full range. Switch rating shall be 8.0 amps at 120 VAC, minimum.

D. Differential pressure transmitter shall be one-pipe, 3-15 psig output, capable of measuring pressure differentials of positive or negative type, operate on the force-balance principal, have an overpressure rating of 30” WC, accuracy of 5 percent full scale, and of the range suitable for the service.

E. Pneumatic room thermostats shall be direct acting, dual (minimum 5°F dead band – 2 output branch lines) or single setpoint, 2-pipe, large capacity, adjustable proportioning type, containing dual or single bi-metallic elements, adjustable differential, minimum setting no greater than 1-1/2 deg. F over a range of 55 to 85 deg. F. Provide tamperproof covers with exposed setpoint indicator in black lettering, exposed thermometer, exposed setpoint adjustment in non-public areas and key operated setpoint adjustment in public areas.

F. Pneumatic humidistats shall be of the adjustable proportioning, 2-pipe type, duct or wall mounted, reverse acting, adjustable sensitivity, sensitive hydroscopic membrane, temperature compensated, 20-90% RH range room, 25-65% RH range for duct, and 55-95% RH range for high-limit applications. Room type shall have tamperproof cover. Duct type shall come mounted inside a galvanized duct mounting box.

G. Temperature transmitters shall be one pipe, directly proportional output signal to measured variable, linearity within plus or minus 1/2% of range for 200 deg. F span and plus or minus 1% for 50 deg. F span, with appropriate 50, 100, 200 deg. F temperature range, compensated bulb, averaging capillary, rod and tube or room transmitter operating on 20 psig input pressure and 3 to 15 psig output. Room transmitter shall be provided with cover and wall plate.

H. Humidity transmitters shall be one pipe, directly proportional output signal to measured variable, linearity within plus or minus 1% of range, temperature compensated, sensitive hydroscopic membrane, room or duct mounted, operating on 20 psig input pressure and 3 to 15 psig output. Room transmitter shall be provided with cover and wall plate.

I. Receiver-controllers shall be single or dual input models direct or reverse acting with mechanical set point adjustment, calibrated proportional band adjustment, and calibrated authority adjustment. Provide proportional control mode for temperature control applications, and proportional plus integral control mode for differential pressure control applications. Proportional band shall extend from 2 to 40% of primary sensor span, authority from 0 to 200% of primary sensor span and integral time from 1/2 to 20 minutes. Suitable for input signal of associated transmitter and output signal required by controlled device.

J. Signal selector relays shall be capable of receiving two or more input signals and transmitting the highest or lowest pressure, with 1:1 input/output ratio.

K. Booster relays shall be proportional type for increasing the volume capacity of an input signal to a directly proportional output signal.

L. Pneumatic switching relays shall be snap acting, switching type with adjustable switching setpoint and fixed differential, single or double pole, and metallic body, for connecting a common port to either of two other ports based on the switching signal.

M. Pneumatic multi-purpose relays shall be two-valve design, high accuracy, high repeatability, metallic body, internal relief, high capacity, proportional, with adjustable set point, capable of being used as direct or reverse acting, amplifying, signal advancing, minimum pressure output, or lower pressure transfer. Removal of main air to the relay causes the branch line output to go to zero.

N. Pneumatic gradual position switches shall provide regulated pressure to a controlled device, with knob and pointer for manual adjustment, graduated scale plate with appropriate markings, suitable for surface or flush mounting on wall or panel as indicated.

O. Pneumatic selector switches shall be two or three position with metallic bodies, have indicating plates with appropriate markings, and suitable for panel or wall mounting. Switches installed in finished rooms shall be recessed in wall and provided with faceplate.

P. Field Mounted Gauges:

1. Provide 1-1/2” air pressure gauges on branch lines of pneumatic systems at controllers, transmitters, valve and damper operators, relays, switches, regulators; and DDC output points. Accuracy shall be 2.5 percent of full scale for the middle half of scale and 3.5 percent elsewhere. At dampers or devices that utilize multiple actuators, a single gauge in a readily visible location is acceptable.

Q. Panel Mounted Pneumatic Gauges:

1. All transmitters shall be provided with receiver gauges.
2. Door mounted analog indicator gauges shall be 3-1/2” diameter with a 1% accuracy.
3. Sub-panel mounted analog indicator gauges shall be 2-1/2” diameter with a 1% accuracy.
4. A 1-1/2” gauge shall be provided on the main air supply inside each control panel.

2.12 LOCAL, AUXILIARY, UPS AND LPI CONTROL PANELS

A. Unitized cabinet type for each system under automatic control with relays and controls mounted in cabinet and temperature indicators, pressure gauges, pilot lights, push buttons and switches flush on cabinet panel face, or as detailed on drawings.

B. Doors shall be removable, right or left hand hinged, locking, keyed alike and to other U-M control panels.

C. Removable perforated subpanel to permit mounting of controls without drilling holes.

D. Wall mounted or support kit or unistrut type frame for floor mounting.

E. Unit shall have knockouts, NEMA Type 1, and listed under UL508 Industrial Control Panel Enclosures.

F. UPS and LPI panel minimum size shall be 19-1/2” high by 16-3/8” wide by 5-3/4” deep.

2.13 AHU SAFETIES ENCLOSURES

A. Enclosures shall utilize a standard 4-11/16” x 4-11/16” square electrical box and blank clover. One half of the blank cover shall be painted red and the other blue. A red neon indicator light shall be installed in the red half of the cover and a blue neon indicator light shall be installed in the blue half of the cover. A terminal strip shall be installed inside the electrical box with two terminals in one half, labeled "H1" and "H2" (for HVAC use), and two additional terminals in the other half, labeled "F1" and "F2" (for fire alarm use). The red neon indicator shall be wired to the F terminals and the blue neon indicator to the H terminals.

2.14 ROOM DIFFERENTIAL PRESSURE INDICATING GAUGES

A. Dial (4" dia.) in metal case, diaphragm actuated, black figures on white background, front recalibration adjustment, scale -0.25" WC to +0.25" WC, suitable for surface or flush mounting. Accuracy +/- 2% of full scale. With plastic gauge mounting plate for flush mounting and space pressure sensor consisting of pressure port, barbed tubing connection, and sensor plastic mounting plate suitable for mounting on a standard electrical junction box.

B. Approved Manufacturers:

1. Dwyer "Magnehelic" with A-465 pressure sensor and A-464 flush mounting plate (provide A-368 mounting bracket for surface mount applications)

THE UNIVERSITY'S HIGH PRESSURE AIR SUPPLY IS AVAILABLE ON CENTRAL CAMPUS VIA THE STEAM TUNNEL SYSTEM AND IS DELIVERED AT -50 DEG. F DEW POINT. THEREFORE CONTROLS USING THIS AIR SUPPLY SHOULD NOT NORMALLY REQUIRE REFRIGERATED OR DESICCANT AIR DRYERS, EVEN WHEN EXPOSED TO OUTDOOR AIR CONDITIONS.

2.15 PNEUMATIC ACCESSORIES

A. Control Air Supply

1. Control air supply shall be from the University's high-pressure (steam tunnel) air supply or from a temperature control compressed air station as indicated on the project documents. System shall be sized for expected use, including air usage of laboratory airflow units or process control actuators (whether this equipment is provided by the MSCC or not), plus 10 percent extra capacity. When providing a control Compressed Air Station, provide a Refrigerated Air Dryer if none of the pneumatic tubing or pneumatic components are exposed to outside air conditions. Provide a Regenerative Desiccant Air Dryer when pneumatic tubing or pneumatic components are exposed to outside air conditions. For projects utilizing the University's high pressure air supply, unless indicated otherwise on the drawings, no air dryers are required.

B. Compressed Air Station

1. Temperature control air compressors shall be reciprocating oil type through 25 HP, rotary screw over 25 HP, specifically designed for pneumatic controls, shall be of the simplex or duplex type, tank or base mounted unit assemblies, have combination intake filter/silencer, and totally enclosed belt guards. Compressors shall be sized based on no more than 1/3 run time with an appropriately sized tank and an average tank pressure of 70 psig for optimum performance. Simplex units shall only be used when backing up another control air supply.
2. Tank shall be of adequate size and contain a shut-off ball valve, ASME safety relief valve, pressure switch operated start/stop control, 120 VAC electronic automatic drain with manual bypass and air pressure gauge.

3. Duplex models shall be complete with NEMA 1 enclosure, starters, disconnects, automatic alternator, H-O-A switches (left H position spring return for test only), low oil shutdown switch, push-to-test pilot lights, and 3-position switch for selection of: compressor 1 only/automatic alternate/compressor 2 only operation. PRV/filter/dryer assemblies may be mounted to the compressor/tank assembly.
4. Approved Manufacturers:
   a. Quincy
   b. ACP
   c. Divilbis
   d. Ingersol-Rand

C. Tubing

1. Copper tubing shall be new hard drawn, air grade, ASTM B75 for 3/8 inch and smaller or type L, ASTM B68 for 1/2 inch and larger, with solder joint or compression type fittings, at the option of the MSCC.
2. Plastic tubing (all sizes) shall be black virgin, polyethylene, ASTM D1248, Type 1, Class C, Grade 5, meeting crack test performance required by ASTM D1693 and be fire retardant (FR) rated. Multi-tube harness material shall be as specified above with a polyester film barrier and vinyl jacket not less than 0.062 inches thick. All non-metallic tubing shall be 1/4" O.D. minimum; micro-sleeve is not acceptable.

D. Pressure Reducing Valves:

1. Pressure reducing valves (PRV) shall be diaphragm operated, self-relieving, designed to provide precision control of air supply pressures, and shall be located after any filters or dryers.
2. PRV shall be capable of being mounted in any position, shall have locking set point handle, and SS inlet strainer.
3. PRV shall have metal or plastic body and shall be provided with 2-1/2” gauge of appropriate units.
4. PRV’s that are not self-relieving shall be provided with a separate relief valve of appropriate range.
5. Approved Manufacturers:
   a. Wilkerson
   b. Hankison
   c. Parker
   d. Van-Air
   e. Johnson
   f. Honeywell
   g. Siemens

E. DDC/Auxiliary/Local Control Panel Air Filters:

1. Provide an in-line air filter for main air supply to each DDC, auxiliary and local control panels capable of removing solids and petroleum-based oils.
2. Filter efficiency shall be 99.9% of 0.5 micron particles.
3. Filter element shall be visible and shall change color to indicate when to be replaced.
4. Minimum capacity shall be 500 SCIM and 30 psig.
5. Approved Manufacturers:
   a. Wilkerson
   b. Hankison

c. Parker
d. Van-Air

F. Coalescing Air Filters:

1. Provide a duplex set of coalescing air filters for the main air supply to all building temperature controls.
2. Duplex assembly shall include upstream and downstream pressure gauges and isolation ball valves for each filter.
3. Filter shall have a replaceable cartridge and drain port.
4. Filter shall be designed to remove oil and water droplets down to 0.01 microns and particulates down to 0.08 microns. Minimum capacity shall be 10 SCFM and 150 psig.
5. Coalescing filters shall be located downstream of refrigerated air dryers and upstream of chemical or desiccant dryers.
6. Approved Manufacturers:
   a. Wilkerson
   b. Hankison
   c. Parker
   d. Van-Air

G. Particulate Air Filters:

1. Whenever chemical or desiccant dryers are used, provide a duplex set of particulate air filters for the main air supply to all building temperature controls located downstream of chemical or desiccant dryers.
2. Duplex assembly shall include upstream and downstream pressure gauges and isolation ball valves for each filter.
3. Filter shall have a replaceable cartridge and drain port.
4. Filter shall be designed to remove particulates down to 0.1 microns. Minimum capacity shall be 10 SCFM and 150 psig.
5. Approved Manufacturers:
   a. Wilkerson
   b. Hankison
   c. Parker
   d. Van-Air

H. Refrigerated Air Dryers:

1. Provide a 120 VAC air-cooled refrigerated dryer capable of providing 35 deg. F dew point air.
2. Unit shall have power on light, high temperature light, valved air bypass piping, and air-to-air precooler/reheater.
3. Heat exchanger to be non-fouling, tube-in-tube, self-cleaning with smooth surfaces.
4. Compressor shall have hot gas bypass, as required, and shall be protected by thermal and current overloads.
5. Condenser fan shall have thermal overload protection.
6. Approved Manufacturers:
   a. Wilkerson
   b. Hankison
   c. Parker
   d. Van-Air

I. Regenerative Desiccant Air Dryers:

1. Provide a 120 VAC regenerative type desiccant dryer of the optimal size to ensure sufficient contact time and capable of providing –40 deg. F dew point air at 150 psig.

2. Units shall have an adjustable solid-state timer and purge flow economizer valve, on/off switch, power on light, separate fill and drain ports for ease of desiccant replacement without piping removal, heavy duty purge exhaust mufflers for quiet operation, non-lubricated air control valves, Teflon seated check valves, visible moisture indicator, visible purge flow indicator, pressure relief valve, ASME code constructed/stamped pressure vessels, SS support screens and air diffusers, tower pressure gauges, structural floor frame and stand for large sizes, wall mounting brackets and supports for small sizes, pre-piped and wired, and complete with air bypass piping.
3. Approved Manufacturers:
   a. Wilkerson
   b. Hankison
   c. Parker
   d. Van-Air

J. In-line Desiccant Air Dryers:

1. Provide an in-line desiccant dryer of the optimal size to ensure sufficient contact time and capable of providing 4,000 cubic feet of –40 deg. F dew point air at 150 psig with a dryer inlet temperature of 68 deg. F.
2. Units shall have a removable bowl or fill port for ease of desiccant replacement without piping removal, visible moisture indicator, and air bypass piping.
3. Not to be used as a substitute for Regenerative Desiccant Air Dryers when providing a control compressed air station.
4. Approved Manufacturers:
   a. Wilkerson
   b. Hankison
   c. Parker
   d. Van-Air

2.16 IDENTIFICATION AND LABELS

A. The MSCC shall provide black phenolic nameplates with engraved white minimum 1/4” high lettering (3/8” high at room differential pressure indicators), for each DDC or auxiliary panel, panel door mounted devices, and all LPI’s, permanently attached, to identify field panel number, building, area, service, etc.

B. All control devices located within auxiliary panels shall be labeled with legible identification that corresponds with the as-built drawings via black permanent marker. Use plastic or metal tags when it is not possible to mark directly on the device.

PART 3 - EXECUTION

3.1 INSTALLATION

A. Install all system components as recommended by the manufacturer, including air compressors, dryers, filters, etc.

B. Thermostats, room temperature sensors, push-buttons, and other adjustable devices meant for room occupant operation shall be mounted 44” to center above the finished floor. This requirement does not apply to control panels and devices mounted in penthouses, mechanical rooms, and other spaces normally inaccessible to room occupants.

C. Zone thermostatic controls used to control both heating and cooling, e.g. a variable volume terminal unit also controlling a reheat coil and/or fin tube radiation, shall be programmed (DDC systems) or set up (non-DDC systems) with a heating setpoint of 71 deg. F and cooling setpoint of 76 deg. F, and a dead-band of 5 deg. F, unless indicated otherwise on the Drawings.

D. System I/O’s shall not be split between different DDC panels.

E. AHU safeties enclosure shall be mounted at the wiring/tubing DDC panel array interface trough.

F. Install all conduit, wiring, cable, tubing and equipment in a first-class manner, using proper tools, equipment, hangers, and supports, and in locations as required for a neat, attractive installation. No material shall be exposed if it is possible to conceal it. Exposed materials shall be installed only with consent of the Owner. Conduit shall not be supported from work of other trades.

G. Support all sensors and devices as recommended by the manufacturer. Space sensors shall be mounted on an electrical box.

H. Provide a control air shut-off valve for each panel.

I. Panels and meter enclosures shall be rigidly mounted.

J. Plastic tubing may be used in all locations, except in mechanical rooms, shafts, or exposed locations, unless run in conduit.

K. Tubing shall not be attached to conduits with current carrying conductors or fire protection piping. It shall be adequately supported with no noticeable sagging between supports, and protected from abrasion and galvanic corrosion. All pneumatic tubing shall be concealed in finished areas.

L. A PRV shall be installed on each floor to provide control air supply.

M. All wiring to devices installed inside auxiliary/local panels shall enter/exist via terminal strips, except twisted/shielded sensor wiring.

N. Provide a pouch or other containing method inside each control panel and insert a copy of the corresponding system control drawings.

O. Provide supplemental Hand-Off-Auto switches and contactors, as required, to permit automatic operation of equipment from the DDC system (i.e. single phase equipment which uses fractional motor starters, etc.).

P. Extreme care shall be used in making connections to other equipment to see that the safeties on this equipment are not inadvertently bypassed or overridden by the DDC.

Q. All equipment having moving parts and controlled by the DDC shall be provided with warning labels no less than 2 in. in height, and in bright warning color, stating that the equipment is remotely started by automatic controls. Such labels shall be posted clearly in the area of any moving parts, such as belts, fans, pumps, etc. The University of Michigan will furnish and install these warning labels.

R. Ensure all dampers, valves, thermowells, flowmeters, and other miscellaneous control components are located and installed correctly so that the specified and intended performance and the sequence of operation is achieved, including components supplied and installed by others.

S. Limit switches used on dampers shall be set at approximately 95% of full stroke (opened and closed). Where a single limit switch is indicated, set at approximately 75% of full stroke.

T. MSCC shall provide all necessary equipment, test gases, etc. for calibration, and shall calibrate all sensors (i.e. CO2, CO, combustible gas, etc.) in accordance with the manufacturer's recommendations. Specialized equipment, test gases, etc. shall be turned over to owner upon completion and acceptance.

U. Flow meters shall be installed with at least 10 diameter of straight pipe length upstream and five diameter of straight pipe length down stream. Power supply to flow meters and BTU meters shall be 115 VAC from the auxiliary DDC panel, and power connection for each device shall be installed with a lockable local service disconnect. Flow meter transmitters/displays and BTU meters shall be mounted 4 feet above finished floor and shall be located at the DDC panel array unless the maximum available cable length is exceeded. All meter components, including sensors, shall be mounted in accessible locations.

V. Airflow sensors shall be installed with the appropriate upstream and downstream clearances per manufacturer's instructions.

W. Remove any unused items that are part of renovations or demolition, including, but not limited to: conduit, wire, tubing, controllers, controlled devices, relays, enclosures, etc. Do not abandon in place.

X. DDC sensor cabling shall not be spliced.

Y. Locate all control components and accessories such that they are easily accessible for adjustment, service and replacement.

Z. Participate in the commissioning process in accordance with the project commissioning documents.

AA. For fan coil controllers and similar programmable electronic controllers, obtain approval of programmable settings from the Engineer and Commissioning Authority prior to programming. Revise settings as required during commissioning.

BB. Install constant flow fume hood monitors surface mounted on the front of the fume hood. Furnish exact dimensions and location to the fume hood factory to allow for concealed wiring to the monitor.

CC. Install constant flow fume hood sash position sensors and sash travel limit brackets in a neat and workmanlike manner. Install cables and wires in a manner which avoids contact by the user during normal use, and allows vertical sashes to be positioned without binding, twisting or tangling.

DD. Flush mount room differential pressure indicating gauges above one door outside of each lab, in the corridor wall at entrance expected to be most frequently used, or as otherwise indicated. Surface mounting is permitted on non-drywall walls. Mount related pressure sensor in ceiling or wall of lab. Mount POS/NEG label adjacent to gauge and visible from floor.

3.2 CALIBRATION AND START-UP

A. The University of Michigan will start-up the DDC panels. The MSCC shall provide calibration and start-up for temperature control devices and systems, including compressors, dryers, etc.

B. After control components have been installed and connected, test, adjust and re-adjust as required all control components in terms of function, design, systems balance and performance. Control devices, linkages and other control components shall be calibrated and adjusted for stable and accurate operation in accordance with the design intent and to obtain optimum performance from the equipment controlled. All control valves shall be stroked and spring ranges verified and set. All dampers shall be stroked to verify proper and smooth operation. Cause every device to automatically operate as intended to ensure its proper functionality. Make systems ready for acceptance tests.

C. Set constant flow fume hood monitor alarms as follows:

1. Insufficient differential static pressure/air volume:
   a. Face velocity 80 FPM (standard hoods) or 60 FPM (Reduced Face Velocity Hoods.
2. Sash above the sash stop position.
   a. Time delay to re-alarm after silence button pushed: 10 minutes.
   b. Alarm shall clear when sash returned to sash stop position or lower.
   c. Floor mounted hoods: Alarm shall activate when any sash is above its sash stop position; time delay and alarm clear shall be same as above.

D. After equipment has been accepted and operated in normal service for two weeks, check the adjustment of control components and recalibrate/replace where required.

END OF SECTION 230900

UNIVERSITY OF MICHIGAN
ARCHITECTURE, ENGINEERING AND CONSTRUCTION

ARCHITECTURE & ENGINEERING
326 East Hoover, Mail Stop B
Ann Arbor, MI 48109-1002
Phone: 734-764-3414
Fax: 734-936-3334

BuildingName
The Description of the Project
P00000000 0000

SPECIFICATION DIVISION 23

NUMBER SECTION DESCRIPTION

DIVISION 23 HEATING, VENTILATING AND AIR CONDITIONING (HVAC)
SECTION 230905 - MECHANICAL SYSTEMS CONTROLS (HOSPITAL PROJECTS)

END OF CONTENTS TABLE

DIVISION 23 HEATING, VENTILATING AND AIR CONDITIONING (HVAC)
SECTION 230905 - MECHANICAL SYSTEMS CONTROLS (HOSPITAL PROJECTS)

REVISION NOTES:

MAY 2017: REVISED SECTION TO ADD CONSTANT VOLUME VENTURI(CVV) FUME HOOD LAB AIRFLOW CONTROLS. VAV FUME HOOD LAB AIRFLOW CONTROLS, INCLUDING ALL OTHER MECHANICAL CONTROLS IN THE VAV FUME HOOD LAB, REMAINS IN MS230910. REFER TO DESIGN GUIDELINE 230030 FOR ADDITIONAL GUIDANCE. ADDITIONAL EDITS INCLUDE CLARIFICATION TO CONTROL DEMOLITION SCOPE, MISCELLANEOUS FLOW METER CLARIFICATIONS, HMI CLARIFICATIONS, CHANGE REFERENCE OF MCIT TO HITS, ADDITIONAL VAV CONTROLLER REQUIREMENTS, CHANGES TO DDC WIRING REQUIREMENTS, IDENTIFICATION LABELLING REQUIREMENTS, AND OTHER MISC EDITS

MAY 2015: NEW SECTION, SPECIFIC AND APPROPRIATE FOR HOSPITAL FUNDED PROJECTS ONLY

APRIL 2016: DEFINED THAT DDC HMI SHALL BE PROVIDED & INSTALLED BY MSCC, PROGRAMMED BY SI. MODIFIED SUBMITTAL REQUIREMENTS. FURTHER DEFINED DDC ARCHITECTURE. ADDED TSTAT AUX COMM PORT. MODIFIED HMI & DIFF PRESSURE TRANSMITTER REQUIREMENTS. MODIFIED BACNET NAMING REQUIREMENTS. ADDED INSTALLATION REQUIREMENTS.

EDITOR'S NOTE:

THESE SPECIFICATIONS MUST BE CUSTOMIZED APPROPRIATELY FOR EACH PROJECT. IN ADDITION TO THESE SPECIFICATIONS, THE PLANS ARE TO INCLUDE THE FOLLOWING, AS A MINIMUM:

- *TEMPERATURE CONTROL DIAGRAM / SCHEMATIC OF EACH SYSTEM (AIR HANDLING UNIT, CHILLED WATER, HOT WATER, AIR TERMINIALS, ETC.) INDICATING ALL CONTROL AND MONITORING INSTRUMENTS AND COMPONENTS. THE DIAGRAM SHOULD ALSO INCLUDE AN INPUT / OUTPUT SCHEDULE FOR THE DDC CONTROLLER, AND SEQUENCE OF OPERATION. AUXILIARY CONTROL COMPONENTS SHALL BE INSTALLED IN AUXILIARY CONTROL PANELS (LOOP POWERED INDICATORS, E.P. RELAYS, P.E. SWITCHES, DIFFERENTIAL PRESSURE TRANSDUCERS, ETC.) SHALL BE SO INDICATED BY SOME METHOD. (I.E. ASTERISK)*

- *INDICATION OF ALL POINTS TO BE DISPLAYED ON THE HUMAN MACHINE INTERFACE (HMI) TOUCHSCREEN PANEL.*

- *LOCATIONS OF ALL DDC PANEL ARRAYS.*

- *PROVIDE TWO 20 AMP POWER CIRCUITS AT EACH DDC/AUXILIARY PANEL LOCATION. ONE CIRCUIT IS FOR THE DDC PANEL, THE OTHER IS FOR THE AUXILIARY PANEL. ELECTRICAL POWER REQUIREMENTS TO BE COORDINATED WITH ELECTRICAL DRAWINGS.*

- *WIRING DIAGRAMS FOR EACH SYSTEM TO SHOW INTENT OF AUTOMATIC OR INTERLOCKED OPERATION.*

- *SCHEDULES FOR DAMPERS, AIRFLOW MEASURING STATIONS, STATIC PRESSURE PROBE LOCATIONS, HUMIDITY RESET, TEMPERATURE RESET, DAY/NIGHT CONTROL ZONE, ETC.*

- *LOCATIONS OF ALL HITS DATA DROPS, SHOWN AT LOCATIONS FOR ALL BACNET BUILDING CONTROLLERS.*

THE SCOPE OF THIS SPECIFICATION INCLUDES CONTROLS FOR ANY LAB ROOM WITHOUT VAV FUME HOODS WHICH INCLUDES HOODS WITH COMBINATION SASHES. IF A LAB ROOM INCLUDES THOSE HOOD TYPES, U-M MASTER SPEC 230910 MUST BE INCLUDED TO COVER ALL MECHANICAL CONTROLS IN THOSE ROOMS.

PART 1 - GENERAL

1.1 MECHANICAL CONTROL SYSTEM GENERAL REQUIREMENTS

A. This Section specifies mechanical systems controls applicable to all project controls except for labs with variable air volume (VAV) fume hoods, including combination (vertical/horizontal) sash fume hoods. Controls in rooms with VAV and combination sash hoods shall be in accordance with Section 230910.

B. The complete control system work shall be split between the Mechanical Systems Controls Contractor (MSCC), the Systems Integrator (SI) and UMH's HITS department as described under section 1.4 "Scope of Work".

C. The Mechanical Systems Controls Contractor shall provide a fully integrated BACnet Mechanical Control System (MCS) incorporating electric, pneumatic, and direct digital control (DDC) components for the control and monitoring of heating, ventilating and air conditioning (HVAC) equipment and other related systems. Controllers shall natively use the most current ANSI/ASHRAE Standard 135 for communications and shall be BTL certified with BTL published PIC statements.

D. All controllers to be used as an integral part of the proposed MCS must be contained on the vendor's "Acceptable BACnet Controllers" list (including BTL PIC statements) on file with the UMHHC Facility Planning and Development (FPD) office and included in Table 1 on BMS Network Architecture Detail on the contract documents. All pre-qualified MSCC shall periodically update their product documentation for approved products to reflect the most current product configurations and features. All new or different parts to be used on this project shall either be submitted and approved prior to bid or specifically included as an alternate on the bid form, in accordance with the alternate product requirements contained general conditions of these specifications. UMHHC reserves the right to reject any part not pre-approved which could result in bid disqualification. Any part that is installed that is not on the "Acceptable BACnet Controllers" list will be removed at the contractor's expense and replaced with the pre-approved controller needed to meet the requirements of these project documents.

E. UMHHC owns and maintains an existing Siemens Desigo CC BACnet Advanced Workstation (B-AWS). This software is installed on application servers- located in the HITS data center. Desigo client workstations are located in University Hospital, Systems Monitoring, Room B2C204. All MSC installations shall be integrated into this front-end thru BACnet IP over UMH HITS's network. Qualified personnel shall be provided to work with the UMH HITS and Systems Integrator personnel as needed to provide a fully functional system.

F. The project shall provide a fully functional MCS comprised of BACnet Building Controllers (B-BC), advanced application controllers (B-AAC), application specific controllers (B-ASC) and Smart Sensors (B-SS), Smart Actuators (B-SA) and Operators Displays (B-OD). The MSCC shall configure, program and commission all controllers to provide the required functionality as defined in the sequence of operation located on the MCS drawings.

G. The MSCC will be responsible to configure B-BC's to serve BACnet data to BACnet Clients installed on the HITS network. Each B-BC shall be configured and programmed to expose all BACnet Objects associated with controllers supervised by the B-BC. The MSCC shall configure the B-BC's to utilize a Change of Value subscription with the Desigo client (and other clients that may reside on the HITS network). Change of Value increments shall be set (tuned) to minimize HITS network traffic.

H. All MCS communication to the Desigo BACnet Client requires the use of BACnet Broadcast Distribution Device configuration (BBMD). UMHHC maintains a BBMD server and will expand the BACnet Distribution Table (BDT) as needed for the project. Submit project requirements as detailed below to facilitate the BDT entries. Coordinate with UMH HITS to determine the proper server level setup for proper communication. The MSCC shall provide proper personnel skilled at BBMD and IT configuration to work with the UMH FPD personnel as needed.

I. The role of Systems Integrator shall be performed by UMH Systems Monitoring staff, or an integration contractor hired by Systems Monitoring. All contracts for Systems Integration, if needed, shall be at the discretion of UMH Systems Monitoring staff and shall be direct contracts with UMH, external to the construction contract.

1.2 DEFINITIONS

A. BMS: Building Management System

B. BTL: BACnet Testing Labs http://www.bacnetinternational.net/btl/

C. B-AAC: BACnet Advanced Application Controller

D. B-ASC: BACnet Application Specific Controller

E. B-AWS: BACnet Advanced Workstation

F. B-OD: BACnet Operators Device

G. B-BC: BACnet Building Controller

H. B-SA: BACnet Smart Actuator

I. B-SS: BACnet Smart Sensor

J. BBMD: BACnet Broadcast Management Device

K. BDT: BACnet Distribution Table

L. DDC: Direct Digital Control

M. FLN: Field Level Network

N. FPD: Facilities Planning and Development (Hospital)

O. HITS: Health Information Technology & Services

P. MSCC: Mechanical Systems Controls Contractor

Q. MCS: Mechanical Control System

R. SI: Systems Integrator

S. Systems Monitoring: UMHHC department responsible for owning & operating the hospital's Building Management System

T. TC: Temperature Controls

U. UMHHC: University of Michigan Hospitals and Health Centers

1.3 RELATED DOCUMENTS

A. Drawings and general provisions of the Contract, Standard General and Supplementary General Conditions, Division 1 Specification Sections, and other applicable Specification Sections including the Related Sections listed below, apply to this Section.

B. Related Sections

1. Division 26: Electrical
2. 220523 Valves
3. 233600 Air Terminal Units
4. 230910 VAV Fume Hood Laboratory Air Flow Controls

1.4 SCOPE OF WORK

A. The complete control system work shall be split between the Mechanical Systems Controls Contractor, the Systems Integrator and UMH's HITS department as described below and under section 1.5 "Related Work by Others". As it relates to the extent of responsibility for work within this specification section, "provide" shall mean the identified party both furnishes and installs such item(s). "Furnish" shall mean the identified party furnishes the item for installation by others.

B. The Mechanical Systems Controls Contractor shall be a direct Subcontractor to the Contractor.

SPEC WRITER NOTES: EDIT SCOPE OF WORK TO SUIT THE SPECIFIC NEEDS OF THE PROJECT

C. Summary of work by the Mechanical Systems Controls Contractor shall include, but not be limited to:

1. Providing a native BACnet-based (latest version of ANSI/ ASHRAE 135) MCS consisting of programmable and application specific DDC controllers, electronic sensors, pneumatic actuators, electronic to pneumatic transducers, relays, switches, control panels, power supplies, twisted shielded pair (TSP)network cabling and all associated control wiring (excluding Ethernet network wiring) and low voltage conduit systems.

2. Providing control panels for all DDC controllers and an auxiliary control panel for all ancillary control devices (electric and pneumatic relays, EP switches, contactors, etc.)
3. Provide application specific controllers (B-ACS) or advanced application controllers (B-AAC) for terminal units (VAV, Dual Duct, Fan Coil Units etc.) including associated room temperature sensors, room temperature sensors with LED display, room temperature sensors with bias adjustment, and CO2 sensors.
4. Create BACnet object names and tags according to UMHHC's point naming standard outlined at in Section 3 – Execution.

SPEC WRITER NOTES: DRAWINGS SHOULD INDICATE LOCATION AND TYPE OF COMMUNICATION CONNECTION SHOWING NECESSARY CONDUIT TO THAT LOCATION (NEAREST DDC PANEL FOR EXISTING BUILDINGS OR NEAREST HITS CLOSET FOR NEW BUILDINGS).

5. Final connection of control panels to the HITS Network from patch panels to the B-BC to permit communication between B-BC's to the existing Building Management System (BMS) server(s) via BACnet/IP. MSCC shall provide and install data connection raceway from panel to facility cable tray. UMHHC HITS department will provide network drops using biscuit jacks inside the control panels to patch panels installed in HITS Telecommunication Rooms. MSCC shall provide and install MS/TP communication trunk for BACnet AAC's, ASC's, SA's and SS's.
6. Install UM Utilities furnished data acquisition panel for utility metering. Provide Ethernet connection of Utility Meters to host computer. MSCC shall provide and install data connection raceway from panel to facility cable tray. Provide wiring from meters and transmitters to utility data acquisition panels. Provide communication wiring to utility data acquisition panels. Terminations inside panels by UM Utilities.
7. Engineering, submittals, as-built drawings, and operation and maintenance manuals.
8. Provide an auxiliary temperature control panel adjacent to each DDC panel. Provide additional auxiliary panels as required to house the required quantity of control components. Small control installations with limited future expansion may be allowed to forego an aux panel and install all devices in a single DDC panel- contact project engineer for approval. Auxiliary panels shall not be smaller than 24"x24", and shall have a 1' high by minimum 2' wide (but not less than panel width) contiguous clear area which can be used for future expansion. Provide all wiring between the DDC panel and the auxiliary panel(s).
9. Provide a local Human Machine Interface (HMI) device mounted in the door of the auxiliary DDC panel that is BTL listed as a B-OD. HMI shall display controller status and critical system parameters (AHU discharge temperature, differential pressure, supply & return temperatures, etc) relevant to the equipment the DDC controller is controlling. Provide all wiring, accessories required to enable HMI to function as specified.
10. Provide and mount all airflow measuring station/ flow meter LCD readout panels on wall adjacent to DDC panels.

11. Mount UPS on wall directly under or to the side of the DDC enclosure. Installations in electrical & telecommunication rooms shall mount the UPS exposed. Installations elsewhere (i.e. mechanical rooms) shall mount the UPS in a ventilated panel enclosure. Provide all interconnecting power wiring between the DDC panel power supply and the UPS panel duplex receptacle.
12. Provide a 6"x 6" wiring trough extending over and between each DDC, auxiliary temperature control, and LPI panel. Provide 1" conduit from trough to cable tray, bonded to tray, for HITS network connection (coordinate routing with HITS).
13. Provide and install DDC panel and UPS enclosures.
14. Provide pneumatic thermostats (where applicable), control valves, dampers, operators, meters, control air tubing, etc.
15. Provide gauges, indicating devices, electric and electronic control accessories, and other control system devices.
16. Provide calibration and start-up services of all DDC and non-DDC temperature control systems.
17. Termination of all wires for input/output (I/O) devices, including, but not limited to: DDC controllers, sensors, H/O/A switches, hard-wired safeties, start-up relays, etc., RTS's, Field Level Network (FLN), and any other field devices.
18. Termination of all wires inside auxiliary panels.
19. Provide site supervision of temperature control work and coordination with related, pneumatic, electrical, fire alarm work and packaged controls.
20. Provide all control wiring and electrical components necessary for each system to permit automatic or interlocked operation, such as: air cooled condensing units, high level alarm circuits, damper end switches, fuel oil pumping/monitoring systems, chiller control/interface panels, boiler control/interface panels, early break contacts on disconnects to VSD's, cooling tower vibration switches, etc.
21. The MSCC shall be responsible for completely removing and decommissioning all existing control devices, wiring, controllers, panels, supports, etc that are being affected by the project's control modifications, including decommissioning any existing DDC control programming on UMH's Siemens, Honeywell, Johnson Controls, or ASI DDC systems that are from points/ devices/ controllers removed or modified under the scope of the MSCC's work. The MSCC's decommissioning work shall include updating the vendor's engineering database, located on UMH central servers, from devices removed under the MSCC's scope of work as well as coordinating removed devices/ points with UMH Systems Monitoring so that the front end can be updated accordingly.
22. Re-establish and validate existing DDC controller communication modified by the scope of work.
23. All other work and components required for complete and operational temperature control systems as specified herein, excluding work specified below in section 1.5 that is to be provided or furnished by the Systems Integrator.
24. Start-up, calibration, and checkout of sensors, transducers, thermostats, control valves, dampers/damper operators, meters, and all other components provided.

25. Commission all mechanical controls provided. Provide a detailed list of every control point installed to the project Commissioning Authority (CxA), and verify proper operation of each component prior to commissioning the controls with the CxA. Include, in checklist format, a detailed procedure to verify all aspects of the controls' Sequence of Operation.
26. Participation in point-to-point verification with Systems Integrator for all control points.
27. Coordination with Systems Integrator, UMHHC's HITS and Systems Monitoring groups.
28. Training of UMHHC personnel to familiarize operations staff with the configuration and operation of this project's MCS installations.

SPEC WRITER NOTES: FUME HOOD MONITORS ARE TYPICALLY NOT PROVIDED BY THE MSCC ON UMH PROJECTS, BUT ARE RATHER PROVIDED WITH THE FUME HOOD. FOR RARE OCCASIONS WHERE THE MSCC WILL PROVIDE THE FUME HOOD MONITOR, CHANGE THE FOLLOWING PARAGRAPH FROM HIDDEN TEXT.

29. Provide fume hood monitors except in rooms with VAV hoods, including combination sash fume hoods.

1.5 RELATED WORK BY OTHERS

A. BMS related work by the Systems Integrator:

1. BACnet device and object discovery.
2. BACnet object instantiation (creation of object classes, naming and location meta data)
3. Generation of Desigo system graphics, alarm summary pages and point/object trend views.
4. Removal/ decommissioning of all graphics, alarms, trends affected by DDC demolition.
5. Configure all required alarming and point/object trending at the Desigo CC frontend.
6. Generation of graphics and configuration of HMI at DDC panels.
7. Point-to-point verification with MSCC for all control points.

B. BMS related work by HITS:

1. Providing IP Layer 3 networking and addressing for all peer-to-peer communication of DDC Building Controllers, utility acquisition panels and the front-end. The MSCC shall be responsible for coordinating implementation of the MCS on the HITS network without disruption.
2. HITS will verify network connectivity and establish a TCP connection between the BMS server and the network drop termination and provide the network configuration settings for the installed hardware.
3. HITS will provide all required patch cables. MSCC shall be responsible for connecting all patch cables at respective controllers/ UPS's.

C. BMS related work by Systems Monitoring:

1. Management of existing and assignment of new:
   a. IP addresses
   b. BACnet Device Instance and Network numbers

c. BACnet Broadcast Management Device (BBMD) and Broadcast Distribution Table (BDT)
d. MS/TP MAC Addresses

D. BMS related work by UM Utilities

1. Provide utility meter data acquisition panels. Panels installed and wired by MSCC. UM Utilities to terminate all I/O wiring and data connections, as well as start-up, configure and commission the panel.

1.6 ACCEPTABLE MECHANICAL SYSTEMS CONTROLS CONTRACTORS

A. The following MSCCs are acceptable for the furnishing and installation of pneumatic, electric and DDC components as specified in this section:

1. Siemens Building Technologies
2. Honeywell, Inc.
3. Fontanesi & Kann (ASI Controls)

EDITOR: CONTACT THE UM DESIGN MANAGER TO DETERMINE WHICH OF THE ABOVE CONTROLS INSTALLATION CONTRACTORS ARE TO BE LISTED AS ACCEPTABLE FOR YOUR SPECIFIC PROJECT.

1.7 QUALITY ASSURANCE

A. Manufacturers and Products: The products and manufacturers specified in this Section establish the standard of quality for the Work. Subject to compliance with all requirements, provide specified products from the manufacturers named in Part 2.

B. Reference Standards: Products in this section shall be built, tested, and installed in compliance with the specified quality assurance standards; latest editions, unless noted otherwise.

1. Electrical Standards: Provide electrical products that have been tested, listed and labeled by UL and comply with NEMA standards as well as NFPA 70 (National Electric Code).
2. NEMA Compliance: Comply with NEMA standards pertaining to components and devices for electrical control systems.
3. NFPA Compliance: Comply with NFPA 90A "Standard for the Installation of Air Conditioning and Ventilating Systems" where applicable to controls and control sequences.
4. Install all BMS components, panels, and wiring in compliance with NEC and all local electrical codes.
5. DDC devices shall use the latest version of ANSI/ASHRAE Standard 135 "BACnet- Building Automation and Control Networking Protocol" standard for communications and have passed BTL certification as available.
6. UL Compliance: DDC Controllers for this project shall comply with UL916 Standard for Energy Management Equipment. DDC Controllers associated with equipment utilized in a smoke control application shall also comply with UUKL-UL 864 "Standard for Control Units and Accessories for Fire Alarm Systems".
7. National Institute of Standards and Technology (NIST), NIST IR 6392 Annex B: Profiles of Standard BACnet Devices.
8. Electronics Industries Association (EIA)

a. EIA-232: Interface Between Data Terminal Equipment and Data Circuit-Terminating Equipment Employing Serial Binary Data Interchange
b. EIA-485: Standard for Electrical Characteristics of Generator and Receivers for Use in Balanced Digital Multi-Point System

1.8 COORDINATION

A. Coordinate with UMHHC's HITS and Systems Monitoring groups as specified in this section. All correspondence with Systems Monitoring shall be directed to Byron Anderson, byronca@med.umich.edu , (734) 232-0126.

B. Coordinate with Systems Integrator. All correspondence with Systems Integrator shall be directed to Byron Anderson, byronca@med.umich.edu, (734) 232-0126. See section 3.10 for more details on coordination requirements with the SI.

C. All correspondence with HITS, Systems Monitoring & SI shall be coordinated thru the owner's project manager.

D. Ensure installation of components is complementary to installation of similar components in other systems.

E. Coordinate installation of system components with installation of other mechanical system equipment.

F. Coordinate control wiring requirements with mechanical equipment manufacturers.

SPEC WRITER NOTES: FUME HOOD MONITORS ARE TYPICALLY NOT PROVIDED BY THE MSCC ON UMH PROJECTS, BUT ARE RATHER PROVIDED WITH THE FUME HOOD. FOR RARE OCCASIONS WHERE THE MSCC WILL PROVIDE THE FUME HOOD MONITOR, CHANGE THE FOLLOWING PARAGRAPH FROM HIDDEN TEXT.

G. Coordinate with laboratory equipment suppliers (constant flow fume hoods, etc.) regarding dimensions and mounting location for alarm monitors and assure proper accommodation is made for the installation of other devices related to laboratory airflow controls.

1.9 SUBMITTALS

A. Prior to submitting shop drawings to the AE of record, the MSCC shall request BMS address assignments from UMH Systems Monitoring, including:

1. IP addresses for new devices and the necessary IP addresses of other BACnet IP devices (for the BACnet Broadcast Distribution Table)
2. BACnet Device Instance and Network numbers
3. BACnet BBMD (when required) and BDT
4. MS/TP MAC addresses

MSCC shall utilize the BMS Addressing Template available through the URL https://umich.box.com/BMS-Addressing-Template for all devices needing BMS addressing.

MSCC shall submit initial shop drawings to the Systems Integrator for coordination. MSCC shall also submit the approved submittal package to the Systems Integrator before construction begins so that front-end integration work at the central BMS server(s) may be performed while the Mechanical Controls System is being constructed.

B. Submit shop drawings to the project AE of record for their review and approval.

C. No work shall be done until the final submittals are approved by project AE.

D. Shop drawings shall contain, as a minimum, the following:

1. UMH BMS Addressing Template pre-filled in with all project specific DDC devices needing BMS addressing assignments.
2. Schematic diagrams of all systems being controlled and/or monitored indicating all DDC points or BACnet objects, BACnet instance numbers, IP addresses, MS/TP MAC addresses, object names/numbers (using UMHHC standard point naming conventions), sensors, relays, controllers, valves, dampers, complete control wiring schematics (including starter, VSD, DX system, etc. wiring diagrams), pneumatic tubing, DDC panel maps, etc.
3. Clearly indicate if DDC points are analog inputs (AI), analog outputs (AO), digital inputs (DI) or digital outputs (DO).
4. Wiring of each point to the DDC panels, including terminal block numbers.
5. Layout of all auxiliary devices and panels, and wiring of relays, contacts, etc. Include terminal block numbers at all control panels, at all mechanical equipment, and at all control devices.
6. Complete Sequence of Operation for each system being controlled, including set points, etc. in written (text) format. Identify each piece of equipment that the sequence of operation applies to utilizing the equipment tags from the engineer's equipment schedules.
7. Schematic diagram of the total DDC system layout, including all panels, trunk cables, peripheral devices, locations, etc.
8. Pneumatic compressed air supply equipment, risers, and major tubing runs.
9. Complete bill of materials to identify and quantify all devices and controllers.
10. Protocol Implementation Conformance Statements (PICS) for all native BACnet controllers and BACnet IP routers.
11. Location/ identification of BBMD including configuration details.
12. A schedule of all nameplates and associated wording.
13. An index of sheets for ease of access.
14. Wiring diagrams and locations of power supplies.
15. Additional submittal items required for any room designated as a lab:
    a. Equipment schedule for each room or zone, with the following information:
        1) Equipment tag, room served, occupied/unoccupied min., max., and offset CFM; lab subnet description, name, and network address; network and power trunk identifier.
        2) Model number of each control component.

3) Function of each terminal airflow unit and control component

E. Submit, as a minimum, the following design data schedules indicating:

1. Airflow Measuring Probes:
   a. Device tag.
   b. Equipment served/function.
   c. Model number.
   d. Size, type, and location.
   e. Station area in square feet.
   f. Max/Min Range.
   g. Magnehelic scale range.
   h. Velocity pressure range.
2. Air and water pressure sensors:
   a. Device tag.
   b. Equipment served/function.
   c. Model number.
   d. Size, type, and location.
   e. Max/Min Range.
3. Control Dampers:
   a. Damper tag.
   b. Equipment served/function.
   c. Model number.
   d. Blade configuration and orientation.
   e. Size in width, height, and blade width.
   f. Pressure drop.
   g. Type of seals (blade and edge).
   h. Normal position.
   i. Size, quantity, type, and model number of actuators.
   j. Method of actuator mounting and actuation.
4. Control Valves:
   a. Valve tag.
   b. Equipment served/function.
   c. Valve flow rate (GPM).
   d. Line size.
   e. Specified valve pressure drop (ft. head).
   f. Valve size.
   g. Valve Cv.
   h. Actual valve pressure drop (ft. head).
   i. Valve normal position.
   j. Valve spring range.
   k. Valve shut-off rating (ft. head).
   l. Valve body pressure/temperature rating.
   m. Valve type/model number.
   n. Actuator type/model number.
5. DDC Controllers:
   a. Device tag.
   b. Equipment served/function.
   c. Model number and application code.
   d. Associated sensor location/tag.
   e. Size, control values, etc.

F. Submittal Requirements

1. Shop drawings shall be 8-1/2" x 11" and 11" x 17" size.

2. All schematics and drawings shall be done on CAD. The electronic files shall be in the latest version of AutoCAD (or as noted otherwise)
3. Product data shall include description and complete engineering data for each control system component. Data sheets shall be organized behind sheet tabs. Each sheet tab shall indicate the category or component name (i.e. valves, dampers, relay & switches, thermostats, temperature transmitters, pressure transmitters, air flow stations, controllers, etc.).
4. Since many items are interrelated and should be checked concurrently, all of the MSCC's DDC related shop drawings shall be submitted at one time. No consideration will be given to partial submittals, except valve and damper submittals on approval only. Any partial submittals must be included in the complete submittal package.

G. Project Record Documents

1. Submit Project Record Documents to Systems Monitoring at the time of substantial completion.
2. Revise shop drawings to reflect actual installation and operating sequences and provide final electronic files in PDF.
3. PDFs shall contain the following files in the indicated format:
   a. As-built drawings in PDF format (separate file for each system's related drawings/sheets).
   b. Sequences of operation in PDF. Provide separate files for each system's sequence of operation.
   c. Product data and catalog specification sheets in PDF format (separate file for each product).
4. List of all BACnet IP and MSTP devices installed with their network IP addresses, BACnet Device Instance numbers and associated BACnet network numbers. MSCC shall be responsible for uploading the completed, as-builted BMS Addressing Template required under section 1.9.A upon project substantial completion.
5. All files shall be dated and shall contain the UMHHC project RTN number and UM AEC P100 number when applicable.

H. Operation and Maintenance Manuals

1. The MSCC shall provide the specified number of copies of complete operation and maintenance instructions for all system components furnished.
2. Include hard-copies of all Project Record Documents described above in paragraph G.
3. Indicate final set points, settings, and adjustments of all components.
4. Include project specific catalog cuts and data sheets indicating installation, operation, maintenance, repair, wiring diagrams, calibration, calibration tolerances, inspection period, cleaning methods and cleaning materials for all components.

I. Posted Operating Instructions

1. Provide panel related as-built documents in protective binder or clear plastic display envelope for each control panel. These instructions shall include such items as as-built control diagrams and sequences of operation, simplified narrative instructions and materials necessary to aid in the operation of the equipment at the local control panels.

1.10 DELIVERY, STORAGE AND HANDLING

A. Shipping and storage protection shall be provided by manufacturer to insure that the interior and exterior of components are completely protected from damage, dirt or weather. Components shall be continuously covered with plastic or other durable means, until just prior to installation. Maintain protection after installation to protect against on-going construction activities.

1.11 WARRANTY

A. The Building Management System shall be guaranteed for a period of one year after final approval has been granted by the Owner and the project Architect/Engineer. The warranty shall be provided for a completely installed system, including all components, parts and assemblies. The warranty shall cover parts, materials and labor to correct any defects in materials and workmanship.

B. The MSCC shall initiate the warranty period by formally transmitting to the Owner commencement notification of the period for the system and devices accepted.

C. Provide 24 hour per day emergency service during warranty period, with maximum next-day response. Provide phone number(s) for quick assistance by a Service Engineer regarding hardware or software problems.

D. Provide any software or firmware revisions which are released by the DDC system manufacturer during the warranty period, at no additional cost to the Owner. Revisions that require updates at the central BMS server(s) will be coordinated with the SI at no additional cost to the Owner.

E. The MSCC shall provide programming modifications necessary to fine tune equipment sequences during the warranty period, consistent with achieving the sequence of operation and design intent, at no additional cost to the Owner.

PART 2 - PRODUCTS

2.1 ACCEPTABLE PRODUCT MANUFACTURERS

A. All pneumatic devices, valves, damper operators, EP relays, PE switches, low temperature detection thermostats, etc. shall be as manufactured by Honeywell, Johnson Controls or Siemens, unless noted otherwise in following sections. See "Products" for acceptable manufacturers for sensors, etc.

EDITOR: CONTACT THE UMHHC FPD DESIGN MANAGER TO DETERMINE WHICH OF THE FOLLOWING DDC SYSTEM MANUFACTURERS ARE TO BE LISTED AS ACCEPTABLE FOR THE PROJECT.

B. DDC controllers and related software shall be in accordance with the pre-approved parts list as manufactured by the respective MSCC listed under section 1.7.

2.2 GENERAL DDC CONTROL ARCHITECTURE

A. BACnet Building Controllers (B-BC) and IP capable Advanced Application Controller (B-AAC) shall provide IP routing capabilities to allow communication over UMH HITS's network (layer 3 IP) and between controllers. A secondary field level network (FLN) shall allow data to be exchanged between B-BC's and Advanced Application Controllers (B-AAC) and Application Specific Controllers (B-ASC) via BACnet MS/TP communication. BACnet objects shall be routed from the new MCS installation to the existing central BMS server(s) that reside on the HITS network. The SI will utilize these BACnet objects to generate system graphics at the existing BMS server(s).

B. The complete Mechanical Control System (MCS) shall consist of the following:

1. Data integration to UMHHC's existing BACnet AWS servers and operator work stations.
2. Peer-to-peer B-BC's communicating with other B-BC's and B-AAC (where IP capable) and UMHHC's existing BACnet AWS over the HITS layer 3 IP network.
3. Peer-to-peer B-AAC, B-ASC, B-SS, B-SA and B-OD's communicating with each other over a MS/TP FLN provided by the MSCC.
4. Sensors, transducers, thermostats, actuators, wiring, etc. directly wired to their respective DDC controller for a complete and operational MCS.

C. BACnet Broadcast Management shall be facilitated by one B-BC per IP Subnet and incorporate a BACnet Distribution Table, provided by System's Monitoring. B-BC's that handle BBMD's and I/O functionality shall be properly sized to handle memory & processing requirements.

D. Terminal units (VAV, FCU, etc) that do not need the global command functionality that a B-BC could provide are allowed to be integrated to the Desigo B-AWS via the use of a BACnet IP Router. Router shall convert BACnet MS/TP to BACnet IP and function as a BBMD.

E. The system shall be modular in nature and shall permit expansion of both capacity and functionality through the addition of sensors, actuators, Building Controllers, Advanced Application Specific Controllers, Application Specific Controllers, expansion modules and operator devices.

F. System architectural design shall eliminate dependence upon any single device for control execution. Each DDC controller shall operate independently by performing its own specified control, operator I/O and data collection. The failure of any single component or network connection shall not interrupt the execution of control strategies at other operational devices. Data collection that requires a single mechanism for user notification or viewing is strictly prohibited.

G. All controllers within a building shall be able to access any data from, or send control commands directly to, any other DDC controller or combination of controllers in the same building without dependence upon a central processing device (peer-to-peer).

H. UMH's HITS Layer 3 Network is the preferred primary network communication means and will be required for communication between all Building Controllers (B-BC), IP capable B-AAC's and the BMS B-AWS, via BACnet IP. The use of MS/TP communications for interconnecting the said IP capable devices is strictly prohibited. HITS shall provide and install the primary network, based on coordination with the MSCC.

I. The secondary FLN shall utilize the Master-Slave/Token-Passing (MS/TP) protocol, as acknowledged by the ANSI/ASHRAE 135 standard. This secondary network shall be provided and installed by the MSCC. Proprietary RS-485 or equivalent links will not be considered unless otherwise noted. The MS/TP link shall operate at a 38.4 Kbps minimum, and utilize no more than 2 repeaters in any instance. Multi-channel repeaters will not be permitted.

J. All BACnet IP routers connected to the HITS network, whether integral to a controller or not, must support BACnet Broadcast Management Device (BBMD) service. Multi-casting or global broadcasting will not be permitted without the use of a BBMD.

K. FLN data communications media shall be provided by a shielded twisted pair conductor.

L. The FLN shall allow shared point and control information between BACnet DDC controllers. All required MS/TP repeaters, hubs, active links, gateways, etc. and associated power supplies shall be provided as required to provide shared point and control information between DDC controllers. Ethernet IP network devices and path shall be provided by UMH's HITS.

M. Failure of any individual FLN installed BACnet controllers shall not cause the loss of communications between peer controllers.

N. All data transmitted must be positively acknowledged as received or negatively acknowledged as not received. Negative acknowledgments shall cause a retransmission of the data. Network connected devices must send a "Heartbeat" message at a configurable time interval. Lack of a "Heartbeat" message after successive retries shall constitute a device failure and shall be recognized as such by the network and be reported as a network alarm at the BMS B-AWS.

O. Error recovery and communication initialization routines shall be resident in each network connected device.

P. UL864 controllers and devices installed for equipment utilized in a smoke control sequence shall not be on the same MS/TP network segment as non-UL864 controllers and devices. These devices shall be on their own MS/TP network segment.

Q. The MSCC shall provide an IP connected DDC controller in the same room as the equipment it serves, unless the contract documents explicitly direct otherwise. Designs that situate controllers in different rooms or on other floors than the equipment being served (ie remote I/O) shall not be allowed without special permission by FPD Engineer. IP connectivity to every DDC controller is preferred, however in an instance where multiple pieces of equipment are within a common room, a MS/TP bus of up to 5 MS/TP controllers shall be allowed.

1. Exceptions to this are the use of MS/TP connected DDC controllers for equipment that functions as a system, ie chiller plants utilizing chillers and cooling towers shall utilize an IP connected controller in the chiller plant and a MSTP subnetwork to a secondary controller serving the cooling towers on the roof. MS/TP controllers are preferred to remote I/O modules for these types of applications. Use of remote I/O shall not be allowed without special permission by FPD engineer.

SPEC WRITER NOTES: INCLUDE THE FOLLOWING PARAGRAPH "R" FOR ALL INPATIENT I-2 FACILITIES AND ANY OTHER CRITICAL FACILITIES (IE DATA CENTERS, ETC). OTHERWISE DELETE PARAGRAPH "R" BELOW.

R. In general, the MSCC shall provide a fault tolerant BMS architecture such that the loss of a single DDC controller does not inhibit the continued, automatic operation of that utility service (ie chilled water, heating hot water, airflow, etc). BMS architecture does not need to be fully redundant, but rather be capable of continuing to provide a partial capacity of the utility being produced. For example, do not control the entire facility chilled water plant (multiple chillers, pumps and towers) off a single DDC controller. Provide multiple (minimum of two) DDC controllers for all critical, major mechanical systems, including but not limited to:

1. Minimum of two (2) DDC controllers per chilled water plant (chillers, pumps, cooling towers, etc).
2. Minimum of two (2) DDC controllers per heating hot water plant (boilers, heat exchangers, pumps, etc).
3. A maximum of two (2) air handling units (AHU) on a single DDC controller. AHU's sharing a DDC controller shall not be designed as backup for one another, i.e. thru a header system or common SA or RA ductwork.
4. Air handling units (AHU) serving operating rooms (OR's) are required to utilize a dedicated DDC controller per AHU.

2.3 GENERAL DDC CONTROLLER REQUIREMENTS

A. Stand-alone microprocessor board with ROM and fully custom programmable RAM, EPROM, and/or EEPROM memory, integral interface equipment and power surge protection. DDC controllers shall be connected directly to sensors, controlled devices and the communication network.

B. All DDC controllers shall use the latest version of ANSI/ASHRAE Standard 135 BACnet standard for communications, have passed BTL certification as available and be listed as compliant with UL916 Standard for Energy Management Equipment. DDC controllers used in smoke control applications must also be listed as compliant with UL864 Standard for Control Units and Accessories for Fire Alarm Systems.

C. Controllers shall be listed by BACnet Testing Laboratories (BTL) as conforming to the required standard device profile and support all of the minimum required BACnet Interoperability Building Blocks (BIBBs) associated with this device profile.

D. The "Present_Value" property of all analog output and binary output objects shall be writable so that Systems Monitoring personnel have the capability to override all system outputs from the central BMS server(s).

E. Each DDC controller shall support firmware upgrades without the need to change hardware.

F. Each DDC controller shall continuously perform self-diagnostics, communication diagnosis, and diagnosis of all panel components. The DDC controller shall provide both local and remote annunciation of any detected component failures, low battery conditions or repeated failure to establish communication for any system.

G. DDC controller types shall be one of three types, a BACnet Building Controller (B-BC), a BACnet Advanced Application Specific Controller (B-AAC) or a BACnet Application Specific Controllers (B-ASC).

1. Building Controllers (B-BC) shall be used for all major mechanical equipment and/or systems (i.e. chilled water, heating hot water, large AHU's, etc.).
2. Advanced Application Specific Controllers (B-AAC) shall be used, as an extension of a B-BC's performance & capacity, for control of all medium and small mechanical systems and/or terminal equipment.
3. Application Specific Controllers (B-ASC) shall only be allowed to be used on terminal equipment including VAV boxes, FCU's, etc.

H. See Table 1 under section 3.13 at the end of this specification, which compares integration functionality of the Desigo B-AWS to the various MSCC BACnet controllers. MSCC shall be responsible for ensuring minimum BIBB performance per Table 1.

SPECIFICATION EDITOR: UMH REQUIRES ALL BACNET BUILDING CONTROLLERS (B-BC) TO BE INTEGRATED TO THE DESIGO CC FRONT END DIRECTLY OVER THE HITS NETWORK. AE SHALL PROVIDE A HITS DATA DROP AT ALL B-BC LOCATIONS TO FACILITATE BACNET IP INTEGRATION TO FRONT END.

I. BACnet Building Controller (B-BC):

1. Provide controllers conforming to the latest version of ANSI/ASHRAE 135 BACnet Building Controller (B-BC) standard device profile and support all of the minimum required BACnet Interoperability Building Blocks (BIBBs) associated with this device profile.
2. Controllers shall support Internet Protocol (IP) for communications to other BC's and the BMS front-end and MS/TP communication to B-AAC's and B-ASC's.
3. Controllers shall have a 32 bit processor with an EEPROM, flash driven operating system. They shall be multi-tasking, multi-user, real-time digital control processors and permit I/O expansion for control / monitoring of up to 48 I/O. Controller size shall be sufficient to fully meet the requirements of this specification. Controllers shall be fully programmable while supporting standard energy management functions, including but not limited to:
   a. Alarm detection and reporting
   b. Automatic Daylight Saving Time switchover
   c. Calendar-based scheduling
   d. Closed loop PID control
   e. Duty cycling
   f. Economizer control
   g. Equipment scheduling, optimization and sequencing
   h. Event scheduling

i. Historical trend collection
j. Holiday scheduling
k. Logical programming
l. Reset schedules
m. Night setback control
n. Peak Demand Limiting (PDL)
o. Start-Stop Time Optimization (SSTO)
p. Temperature-compensated duty cycling
q. Temporary schedule override

4. Provide controller with integral power switch. If an integral switch is not provided by the manufacturer, the MSCC shall provide a separate dedicated transformer and switch within each enclosure for each controller present.
5. The operator shall have the ability to manually override automatic or centrally executed commands at the Building Controller via local, point discrete, hand/off/auto operator override switches for digital control type points and gradual switches for analog control type points. These override switches shall be operable whether the panel processor is operational or not.
6. Controllers shall provide local LED status indication for power, communications, status and each digital output for constant, up-to-date verification of all point conditions without the need for an operator I/O device.
7. All points associated with a given mechanical system (i.e., an air handling unit) will be controlled from a single Building Controller or point expansion panel(s) from the respective master. All expansion modules shall be located in the building controller enclosure or an attached enclosure. No points from a given mechanical system may be distributed among multiple panels - points must be run back to a single Building Controller dedicated to that mechanical system. Multiple mechanical systems shall be allowed on a single controller Closed-loop control must never depend upon network communications. All inputs, program sequences, and outputs for any single DDC control loop shall reside in the same Building Controller.
8. A variety of historical data collection utilities shall be provided for manual or automatic sampling, storing and displaying system point data.
   a. Building Controllers shall store point history data for selected analog and digital inputs and outputs:
9. Building Controllers shall also provide high resolution sampling capability for verification of control loop performance. Operator-initiated automatic and manual loop tuning algorithms shall be provided for operator-selected PID control. Provide capability to view or print trend and tuning reports.
      1) Loop tuning shall be capable of being initiated either locally at the Building Controller or from a network workstation. For all loop tuning functions, access shall be limited to authorized personnel through password protection.
10. Provide controllers that, upon full system power recovery, all clocks shall be automatically synchronized, and all controlled equipment shall be automatically re-started based on correct clock time and sequence of operation.

11. Provide additional controllers or I/O modules if necessary in each DDC panel so that each panel has at least 20% spare universal I/O capacity for connection of future points. Provide all processors, power supplies, and communication controllers so that the implementation of adding a point to the spare point location only requires the addition of the appropriate expansion modules, sensors/actuators and/or field wiring/tubing.
12. Controllers shall provide at least one data communication port for operation of operator I/O devices such as portable laptop operator's terminals. Controllers shall allow temporary use of portable devices without interrupting the normal operation of permanently connected printers or terminals. A USB port shall alternatively be available to support local HMI tools connection.
13. Field bus adaptors may be used, as an extension of the B-BC, to facilitate communication between the B-BC and remote field devices (sensors, actuators). Adaptors shall be microprocessor based and utilize advanced diagnostics and configuration. Adaptor shall be housed in panel or junction box enclosure.

J. BACnet Advanced Application Specific Controller (B-AAC):

1. Provide controllers conforming to the latest version of ANSI/ASHRAE 135 BACnet Advanced Application Specific Controller (B-AAC) standard device profile and support all of the minimum required BACnet Interoperability Building Blocks (BIBBs) associated with this device profile.
2. Controllers shall support MS/TP communication to B-BC's and other B-AAC's and B-ASC's. Also acceptable are B-AAC controllers that support Internet Protocol (IP) for communications to other BC's/ AAC's and the BMS front-end and MS/TP communication to B-AAC's/ ASC's.
3. Controller shall be a microprocessor-based, 32 bit, multi-tasking, real-time digital control processor capable of stand-alone operation for medium sized mechanical systems and/ or control of roof-top units, VAV terminal units, CAV terminal units, dual-duct terminal units, fan-coil units, heat pump units.
   a. If the hardware point requirements of any medium-sized system should exceed the I/O configuration of available B-AAC offerings then a B-BC must be used. Control of one piece of mechanical equipment may not be performed by more than one controller.
4. Controllers shall be peer-to-peer devices with hand/off/auto switches for each digital output. Switch position shall be supervised in order to inform the system that automatic control has been overridden. Switches will only be required for non-terminal applications (not required for VAVs, CAV's and other above terminal devices). All inputs and outputs shall be of the universal type, allowing for additional system flexibility
5. Each controller shall support its own real-time operating system. Controllers without real-time clock functionality will only be permitted for use on terminal or unitary equipment such as VAV boxes, fan coil units and auxiliary monitoring and control.

6. Provide each controller with sufficient memory to accommodate point databases and operating programs. All databases and programs shall be stored in non-volatile EEPROM. The controllers shall be able to return to full normal operation without user intervention after a power failure of unlimited duration.
7. Controllers must be fully programmable. All programs shall be field-customized to meet the user's exact control strategy requirements. Controllers utilizing pre-packaged or canned programs shall not be acceptable.
8. All points used for a single mechanical system shall be connected to the same B-AAC. Points used for control loop reset based on outside air, or space/zone temperature, or extremely remote differential pressure sensors on slow acting control loops are exempt from this requirement.
9. Provide spare additional I/O such that future use of spare capacity shall require providing only the field device, field wiring, point database definition and operational sequence programming changes as required. Additional point modules may be required to implement use of these spare points.
    a. Provide at least one (1) spare universal input and one (1) spare universal output or 15% spare I/O of the total capacity of each B-AAC whichever is greater.
    b. If B-AAC I/O is not universal then provide at least one (1) spare analog input, one (1) spare digital input, one (1) spare analog output and one (1) spare digital output or 15% spare I/O of the total capacity for each point type of each B-AAC whichever is greater.

K. BACnet Application Specific Controller (B-ASC):

1. Provide controllers conforming to the latest version of ANSI/ASHRAE 135 BACnet Application Specific Controller (B-ASC) standard device profile and support all of the minimum required BACnet Interoperability Building Blocks (BIBBs) associated with this device profile.
2. Controllers shall support MS/TP communication to B-BC's, B-AAC's and other B-ASC's.
3. Controller shall be a microprocessor-based, 32 bit, multi-tasking, real-time digital control processor capable of stand-alone operation for control of mechanical terminal units, ie VAV terminal units, CAV terminal units, air terminal units, dual-duct terminal units, fan-coil units, heat pump units and roof-top units.
4. Each controller shall be capable of sharing point information with other B-BC, B-AAC, or B-ASC on a peer-to-peer basis via the BACnet network.
5. Controllers shall include all point inputs and outputs necessary to perform the specified control sequences. All inputs and outputs shall be of the universal type (outputs may be utilized either as modulating or two-state). Analog outputs shall be industry standard signals such as 24V floating control and 0-10VDC allowing for interface to a variety of modulating actuators.

6. Provide each controller with sufficient memory to accommodate point databases and operating and application programs. All databases and programs shall be stored in non-volatile EEPROM. The controllers shall be able to return to full normal operation without user intervention after a power failure of unlimited duration.
7. Each controller shall perform its primary control function independent of other DDC controller communications, or if communication is interrupted. Reversion to a fail-safe mode of operation during network interruption is not acceptable. Controller shall receive its real-time data from the Building Controller time clock to insure network continuity.
8. Each controller shall include algorithms incorporating proportional, integral and derivative (PID) values for all applications. All PID values and biases shall be field-adjustable by the user via operator terminals. Controllers that incorporate proportional and integral (PI) control algorithms only, without derivative (D) control algorithms, shall not be acceptable.
9. Controllers shall provide diagnostic LEDs for power, communications and processor status. The controller shall continually check the status of its processor and memory circuits
10. All points used for a single mechanical terminal unit shall be connected to a dedicated B-ASC. Points used for control loop reset based on outside air, or space/zone temperature, or extremely remote differential pressure sensors on slow acting control loops are exempt from this requirement.
11. Controllers shall perform and manage historical data collection. Minimum sampling time shall be configurable with a minimum sample rate of once per second. Controller shall store point history files for all analog & binary I/O's.

L. Controllers used for air terminal units (VAV's, CAV's, dual-duct mixing boxes):

1. Provide electronic damper operators compatible with the controller and the air terminal units provided. Actuator shall utilize a brushless DC operator, min 35 in-lbs of torque, floating control (unless noted otherwise).
2. Controllers shall have an internal differential pressure transducer(s) capable of utilizing the total and static pressure signals from the air terminal unit's velocity sensor. Transducer shall be capable of 5% accuracy throughout its range of 0-1"wc. Associated velocity sensor shall be furnished by air terminal unit manufacturer.
3. Each controller shall have electronic outputs compatible with the electronically operated air terminal unit tempering coil control valve and perimeter radiation control valve where applicable.
4. Provide a discharge air sensor, mounted on the discharge of the terminal box reheat coil and/ or the outlet of dual duct mixing boxes, interfaced with the controller.
5. DDC terminal controllers used in the following critical pressurized rooms shall not be permitted to modulate the terminal unit damper as part of a regular calibration cycle:
   a. Operating Rooms/ Procedure Rooms/ Delivery Rooms (UMH Infection Control Room Type 1 and 2)
   b. Cardiac Cath/ Angiography/ Interventional Radiology Rooms (UMH Infection Control Room Type 3)

c. Airborne Infection Isolation Room
d. Protective Environment Rooms
e. Pharmacies
f. Labs
g. Central Sterile Processing/ Instrument Processing
h. Autopsy Rooms

MSCC shall provide alternate controllers, proportional actuators and/or auxiliary devices (ie an 'auto-zero' auxiliary device(s) which functions to temporarily disengaging the transducer from the air velocity sensor so that a 0 cfm air volume reading is forced without changing the damper position) when serving these spaces to prevent negatively affecting room pressurization.

6. If coordinated with mechanical contractor, controllers shall be furnished to the unit manufacturer for factory mounting; otherwise, controls shall be field installed.
7. MSCC shall provide controllers with metal enclosure, complete with conduit knockouts.

M. Provide wall-mounted space sensors for each controller performing space temperature control. Sensor shall be thermistor, 55°F-85°F range, +/-0.18°F resolution and capable of being field calibrated. Provide sensor with auxiliary communications port to allow remote connection to VAV controller(s) with a laptop computer, to facilitate configuration and commissioning of controllers.

1. Space Sensors in private spaces (i.e. office, exam, patient room, etc.):
   a. Provide with digital LCD temperature display
   b. High accuracy set point adjustment
   c. Flush mounted override button (only on systems where this function exists)
2. Space Sensors in public areas (i.e. corridors, waiting rooms, dining areas, etc.):
   a. Provide without digital LCD temperature display, no adjustment or override button.
3. Space Sensors where occupant safety is a concern (i.e. psych. patient areas):
   a. Install wall-mounted, blank-faced, stainless-steel temperature sensors with tamper-proof screws.
4. Space Sensors in areas subject to abuse (i.e. utility corridors, central sterile, OR's/ Procedure Rooms, etc.):
   a. Provide appropriate sensor per above with 2-piece crash guard, consisting of heavy gauge, bent stainless sheet steel securely anchored to wall on either side of sensor, consistent with guards used thru ought medical campus.
5. Zone Sensors shall not be located on perimeter walls. Where explicitly indicated on drawings to do so and/or in locations near exterior walls and/or subject to drafts, sensors shall have insulated mounting bases to prevent false room temperature readings.

N. BACnet IP Routers:

1. BACnet router between MS/TP and B/IP (BACnet over IP) as well as a BBMD (BACnet Broadcast Management Device) for transportation of BACnet broadcasts over an IP network with several subnets.

2. Router shall comply with latest version of ASHRAE Standard 135 for communications.
3. Routers shall be UL864 listed when connected to BACnet MS/TP network segments that contain UL864 listed devices being used in a smoke control application.
4. Device shall be capable of routing BACnet packets over layer 3 IP network and shall support both the router and BACnet Broadcast Management Device (BBMD) networking options. BBMD shall support registrations by Foreign Devices.
5. 24 VAC power supply required for router(s) shall be provided by the MSCC. Supply from UPS source at DDC controller panel.
6. Device shall be password protected with customizable password and security settings.
7. Acceptable Manufacturers: Loytec, Cimetrics.

SPECIFICATION EDITOR: SYSTEMS (AHU'S CHILLER, ETC) THAT ARE FED FROM EMERGENCY POWER SOURCES SHALL HAVE THEIR ASSOCIATED DDC CONTROLLERS AND DDC DEVICES FED FROM THE SAME EMERGENCY POWER SOURCE. A/E TO INDICATE PROPER CIRCUITS ON DOCUMENTS.

O. Controller Power Supplies:

SPECIFICATION EDITOR: THE AE SHALL CLEARLY INDICATE SOURCE OF POWER FOR ALL DDC CONTROLS. POWER SOURCE (NORMAL VS EMERGENCY) & PRIORITY SHALL MEET OR EXCEED THAT OF THE EQUIPMENT BEING CONTROLLED.

1. Power to controllers and associated controlled devices shall be 24 VAC, provided by the MSCC. Power source (i.e. normal vs. emergency power & emergency power priority) shall match that of the equipment and/ or system being controlled.

SPECIFICATION EDITOR: IN GENERAL, UPS'S SHOULD BE PROVIDED FOR ALL CONTROLLERS, TO PROTECT AGAINST DAMAGE DUE TO POWER QUALITY AND TO MINIMIZE DISRUPTION. THE EXCEPTIONS ARE CONTROLLERS SERVING NON-CRITICAL INFRASTRUCTURE IN OFFSITE/ OUTPATIENT FACILITIES. DISCUSS WITH FPD ENGINEER AND EDIT BELOW ACCORDINGLY.

2. Controllers powered from emergency power as well as non-emergency powered controllers serving critical front-end infrastructure (i.e. chiller plants, AHU's) shall be provided with a UPS- see UPS specification below.
3. Provide each DDC panel with a line filter, surge suppressor, electrical disconnect, control fuse, and control transformer. All sized and provided by the MSCC.
4. Provide fully enclosed power supplies located inside control enclosures with external 24 Vac terminals, on/off control, equipment overcurrent protection, power indication, high/low voltage separation, and convenience 120VAC outlets.
5. Provide insulated, modular, feed-through, clamp-style terminal blocks suitable for rail-mounting with end plates and partitions for the termination of all field wiring in control enclosures. Field wiring to equipment with integral terminals and/or unitary equipment (i.e., VAV's, EF"s, etc.) shall not be required to have terminal blocks.

Provide a minimum of 72 battery backup hours for complete system RAM memory and clock, with automatic battery charger. The backup power source shall have sufficient capacity to maintain volatile memory in event of an AC power failure.

SPECIFICATION EDITOR: DESIGNER SHALL CLEARLY DELINEATE ON THE PROJECT DRAWINGS WHICH SPACES ARE LABORATORIES. UMH REQUIRES ALL LAB CONTROLS TO BE INTEGRATED TO THE DESIGO CC FRONT END DIRECTLY OVER THE HITS NETWORK. AE SHALL PROVIDE A HITS DATA DROP AT ALL LAB INTEGRATION LOCATIONS.

2.4 LABORATORY CONTROLS

A. Provide laboratory controls for any space designated as a laboratory and where indicated, except for rooms with VAV fume hoods and hoods with combination sashes. System shall include: temperature, pressure, and other sensors/transmitters; control valves; control, network, and power wiring; power supplies; routers, servers, and all other devices required for a complete system.

1. The system shall utilize conventional terminal air flow units for supply and general room exhaust and venturi style terminal air flow units for constant volume fume hoods and any other constant volume exhaust point. Refer to related section 233600.
2. Provide programming of all laboratory controls.
3. The system shall function to achieve the sequences of operation detailed on the drawings.
4. Each room or zone shall have a dedicated control system. Systems shall be independent and stand-alone from the Owner's BMS. Failures of the BMS system or network communications between the BMS and the system (cut communication cables, router or server failures, etc.) shall have no impact on individual laboratory control.
5. The system shall perform the following control functions:
   a. Pressurization Control: Control supply and auxiliary/general exhaust at a volumetric offset to maintain lab pressurization (positive, negative, or neutral). Controller shall maintain a constant offset (adjustable) between the sum of the room's total exhaust and the make-up/supply air volumes. This offset shall represent the volume of air that will transfer to or from the corridor or other adjacent rooms. Pressurization control shall consider networked devices, non-networked devices, and any number of constant volume devices.
   b. Lab Temperature Control: Regulate lab space temperature through a combination of supply air volumetric control and control of reheat coils and other auxiliary temperature control devices, in response to temperature sensor(s).
   c. Occupancy Control: Reset minimum volume settings and/or temperature control set points, based upon external signals from occupancy detectors, local over-ride buttons, and similar devices.
   d. Constant volume fume hoods and other constant volume exhaust points (excluding general room exhaust): The self-actuated Constant Volume Venturi (CVV) Terminal Airflow Unit shall maintain a constant airflow set point.
   e. Fume Hood Monitoring: Alarm unsafe condition at each fume hood.
   f. Other control functions as indicated on the drawings.
   g. Interface with the Owner’s BMS thru BACnet IP.

BELOW PARAGRAPH INDICATES THAT POWER SUPPLIES SHOULD BE INSTALLED ABOVE DOORS TO LABS. DESIGNATE THE LOCATION OF THIS EQUIPMENT ON THE DRAWINGS. WORK WITH ELECTRICAL ENGINEER TO DESIGNATE THE RECEPTACLE PANEL CIRCUITS TO FEED LAB CONTROL POWER SUPPLIES. DEPENDING ON LOAD, MULTIPLE POWER SUPPLIES MAY BE FED FROM A SINGLE 120 VAC CIRCUIT.

B. Install power supplies secured to a wall and mounted above the doors to labs, unless indicated otherwise. Utilize receptacle panel circuits designated for powering lab control power supplies.

C. Provide power supplies for lab airflow controls in NEMA 1 metal enclosures, adequately ventilated to prevent overheating of the equipment, with exterior labeled "Laboratory Airflow Controls Power Supply", and listing the room numbers served. Maximum cabinet projection from wall shall be 8 inches. Label each secondary circuit inside the cabinet with the room number(s) served.

1. Control transformers shall be rated NEC Class 2 and shall meet all the requirements and recommendations of the laboratory airflow controls manufacturer.
2. No more than five pressurization zones shall be served from a single control transformer. No control transformer shall exceed 500 VA.
3. Each pressurization zone shall be powered by a dedicated (isolated) secondary circuit. Each secondary circuit shall include a disconnect switch, "power on" indicator, and be current limited with a slow blow fuse or circuit breaker.

D. Provide a disconnect switch, with shielded terminations, for line side power (one per control transformer). Locate inside the power supply enclosure.

SPEC WRITER NOTES: FUME HOOD MONITORS ARE TYPICALLY NOT PROVIDED BY THE MSCC ON UMH PROJECTS, BUT ARE RATHER PROVIDED WITH THE FUME HOOD. FOR RARE OCCASIONS WHERE THE MSCC WILL PROVIDE THE FUME HOOD MONITOR, CHANGE THE FOLLOWING PARAGRAPH FROM HIDDEN TEXT. ***CONSIDER IF OTHER LABORATORY EQUIPMENT WOULD BENEFIT FROM BEING EQUIPPED WITH A FUME HOOD MONITOR AND INDICATE THAT EQUIPMENT ACCORDINGLY. EXAMPLES: EXISTING FUME HOODS, BIO-SAFETY CABINETS.***

E. Provide fume hood monitors for constant volume fume hoods and for other laboratory equipment where indicated.

1. Monitor shall include audible alarm, visual LED alarm, and a common (single) alarm silence button.
2. The fume hood monitor shall provide an alarm indication for the following conditions:
   a. Low fume hood face velocity as detected by:
      1) Insufficient differential static pressure as detected by the TAU- CVV pressure switch (Phoenix CVV Terminal Air Flow Units).
      2) Insufficient air volume, as detected by the air flow station (Siemens CVV Terminal Air Flow Units).
      3) Sash raised above sash stop position.

b. When an alarm condition is detected, audible and visual alarm indicators shall activate. Pushing the alarm silence button shall mute the alarm for an adjustable time delay, initially set at 10 minutes. Alarm shall re-sound after the time delay, until alarm condition clears. Visual alarm shall remain lit until alarm conditions clears.

3. Sash position shall be sensed by using a vertical sash position sensor. The vertical sash sensor shall consist of a precision 10-turn potentiometer mechanically coupled to a constant tension spring reel. Resolution shall be +/- 1/2 inch or better. A stainless steel, burr and snag-free cable shall be attached to the spring reel. Expected lifetime based on manufacturer's tests shall be over 200,000 full height sash movements. Sash sensor shall be installed in a location on the fume hood easily accessible for service.
4. Fume hood monitor shall be suitable for surface mounting on the front of the fume hood.
5. Approved fume hood monitors:
   a. Phoenix FHM530 Controller (Provide for Phoenix CVV Terminal Air Flow Units)
   b. Siemens (Provide for Siemens CVV Terminal Air Flow Units)

2.5 UNINTERRUPTABLE POWER SUPPLIES (UPS)

SPECIFICATION EDITOR: UMH REQUIRES ALL UPS'S TO BE INTEGRATED TO THE DESIGO CC FRONT END DIRECTLY OVER THE HITS NETWORK. AE SHALL PROVIDE A HITS DATA DROP AT ALL UPS LOCATIONS AND NETWORK COMM CARD INTEGRAL TO ALL UPS'S (SEE BELOW SPEC) TO FACILITATE SNMP INTEGRATION TO FRONT END.

A. Provide local tower UPS for DDC Controllers and associated controlled devices. UPS shall meet the following minimum requirements:

1. UPS shall be sized for continuous full load use of all components served plus an additional 25% for a period of at least 5 minutes. Minimum size shall be 300 VA.
2. UPS features:
   a. Audible alarm when main power is not available
   b. Automatic internal bypass
   c. Provide with a network communication card for remote monitoring by Web/SNMP thru UMH's layer 3 network.
   d. RF noise filtering.
   e. Over-voltage protection.
   f. Four outlet receptacles minimum.
   g. Visual status alert light.
   h. Sealed maintenance-free hot-swappable batteries.
3. UPS installations within electrical & telecommunication rooms free from dirt/ dust & damage shall mount the UPS exposed, with brackets securely anchoring the UPS to the wall. Installations elsewhere (i.e. mechanical rooms) shall mount the UPS in a dedicated, ventilated panel enclosure. Provide panel with filtered supply fan (Dayton 2RTE8, 120V, 3"dia, 40 CFM) powered from UPS with filter guard assembly (Dayton 4YD95) and 3" dia. aluminum screened outlet opening (Dayton 4YD77).
4. Provide with and install UPS interface power control module, Functional Devices PSM2RB10. Do not cut plug head off UPS cords.

5. Integrate UPS into the MCS via dedicated HITS network connection.
6. Approved Manufacturers:
    a. Eaton PW9130 with Network MS Communication Card

2.6 ELECTRONIC SENSORS, INDICATORS, TRANSDUCERS AND COMPONENTS

A. Temperature and Humidity Sensors:

1. Temperature sensor assemblies used with Loop Power Indicators (LPI's) shall consist of a Resistive Temperature Device (RTD's) with a 4-20 mA 2-wire transmitter and gasketed utility box enclosure. All other temperature sensor assemblies shall match the requirements of the associated temperature controller and shall be based upon 10k or 20k thermistors. Sensors using 4-20 mA transmitters are preferred and specified herein, however sensors utilizing voltage signal transmitters (i.e. 0-5 VDC) are allowed if required by controller input requirements and sensor accuracy is not affected by sensor cable length. Sensing element shall be platinum with 100 ohms resistance at 32°F. Accuracy shall be +/- 1/2°F over the entire range.
    a. Single point duct temperature sensor shall be rigid bulb type with stainless steel (SS) sheath, aluminum tip, and have a calibrated span of 20-120 deg. F or 30-250 deg. F for heating applications.
    b. Averaging element duct mounted temperature sensor shall have a minimum 25 ft. long continuous element sensor along the entire length, and have a calibrated span of 20-120 deg. F or 30-250 deg. F for heating applications.
    c. Rigid averaging element duct mounted temperature sensor shall have a brass case, bendable sheath, continuous element sensor along the entire length, and have a calibrated span of 20-120 deg.
    d. Outside air sensor shall be designed to mount on a conduit, include an elbow type enclosure, sun shield, and have a calibrated span of -58-122 deg.
    e. Liquid immersion temperature sensors shall have 5 1/2" long probe with SS well, and weather tight enclosure. Transmitters for chilled water shall have a calibrated span of 20-120 deg. F or 30-250 deg. F for heating applications.
    f. Surface mount thermal-ribbon flexible sensor for pipe mounting shall have SS braid over lead wires, use pressure sensitive adhesive, must be properly insulated, and have a calibrated span of 30-250 deg. F.
    g. Room temperature sensors (non-VAV) shall have a span of 20-120 deg. F, locking covers and when pneumatic, shall match the pneumatic thermostats used.
    h. Adjustable room temperature sensors (non-VAV) shall have a digital temperature display, high accuracy set point slide, flush mounted override button, and a temperature range of 55-85 deg. F.
    i. Approved Manufacturers:
        1) TCS
        2) Siemens
        3) Honeywell
        4) Johnson Controls

5) Minco
6) ASI
7) ACI (Automation Components Inc)

2. Outside Air Master Temperature and Humidity Sensors - Dual System:
   a. Single point outside air temperature RTD shall be 1000-ohm thin film platinum resistor sensor with 4-20 mA 2-wire output transmitter with solar shield.
   b. Outside air humidity sensor shall be thin film alumina substrate capacitance signal generating sensor with 4-20 mA 2-wire output transmitter with 0-100% relative humidity range within +/- 1% RH.
   c. Approved Manufacturers:
      1) Vaisala
3. High Precision Temperature Sensors: (for temperature inputs used for BTU calculations)
   a. Temperature transmitter with 100 ohm platinum RTD sensor and 4-20 mA 2-wire DC output. Zero and span shall be continuously adjustable. Sensor and transmitter shall be a matched assembly. Accuracy shall be +/- 0.1% of calibrated transmitter span, including combined effects of repeatability, hysteresis and linearity. Calibrated range shall be 20 to 120 deg. F. Both CHWS and CHWR sensor/transmitter assemblies shall have the same span and shall be factory calibrated as a matched pair.
   b. Liquid immersion sensors shall have welded stainless steel thermowell. Transmitters shall be of the potted type or shall have a thermally isolated watertight enclosure. Length of sensor and thermowell shall be selected based on the diameter of the pipe to provide accurate, reliable and homogeneous sensing of the liquid temperature.
   c. Approved Manufacturers:
      1) TCS
      2) Minco
4. Humidity Sensors:
   a. Sensor element shall be thin film capacitive type or bulk polymer resistance type, accuracy of +/- 2% RH, range of 0-100% RH with 4-20 mA 2-wire linear output. Factory calibrate for maximum accuracy at mid-range of normal operating humidity. All humidity sensors shall be resistant to chlorine and other cleaning agents.
   b. Room Sensors shall have locking cover.
   c. Duct Sensors shall have duct probe and mounting plate.
   d. Approved Manufacturers- Critical Applications (OR's/ Procedure Rooms, AHU's serving patient care, Central Sterile, animal research):
      1) Vaisala
   e. Approved Manufacturers- Non-critical Applications:
      1) Siemens
      2) TCS
      3) General Eastern
      4) Vaisala
      5) Honeywell
      6) ACI (Automation Components Inc)
5. Vivarium Temperature and Humidity Sensors: (for wet service)

a. Room temperature RTD shall be 100 ohm platinum sensor with 4-20 mA 2-wire output transmitter. Transmitter shall be waterproof or shall be remote mounted.
b. Room humidity sensor shall have a 4-20 mA 2-wire output transmitter, 0-100% relative humidity range, accuracy of +/- 2% RH, shall be waterproof, and shall be resistant to chlorine and other cleaning agents.
c. Combination units shall comply with the above, but shall be mounted in a single enclosure, and shall be protected by a SS "U"-shaped guard firmly attached to the wall.
d. All vivarium sensors shall have rust proof and waterproof covers and be protected by a SS "U"-shaped guard firmly attached to the wall.
e. Approved Manufacturers:
    1) Vaisala
    2) TCS
    3) General Eastern
    4) Siemens

SPCIFICATION EDITOR: LOOP POWERED INDICATORS, WHICH REQUIRE RTD SENSORS, ARE NOT TYPICALLY REQUIRED FOR NEW INSTALLATIONS, ONLY FOR MODIFICATIONS TO EXISTING LPI INSTALLATIONS. USE HUMAN MACHINE INTERFACE PANEL (HMI), SPECIFIED ELSEWHERE IN THIS SECTION, FOR AN OPERATOR INTERFACE AT ALL DDC PANEL INSTALLATIONS.

B. Loop-Powered Indicators

1. All analog sensors (i.e., temperature, humidity, CO2, CO, etc.) shall be provided with a Loop-Powered Indicator (LPI) mounted on a separate dedicated LPI panel, except those sensors that are provided with a local display. Local displays shall be mounted at the DDC panel array.
2. Indicator shall be designed to display any 4-20 mA transmitter signal directly in the engineering unit of the measured media. The display shall be powered directly by the measured 4-20 mA signal without requiring an additional power supply. Indicator shall not impose impedance on the current loop beyond the capability of the transmitter.
3. Display shall have minimum 5/16" LCD digits, with 3-1/2 digit capability selectable decimal point and selectable scale. Accuracy of indication shall be 0.1% of scale.
4. Indicator shall be provided with a lettered plate indicating appropriate engineering units.
5. Approved Manufacturer:
    a. R. E. Technologies, Inc. (Kele Assoc.)

C. Pressure and Flow Sensors

1. Air Differential Pressure Transducer:
    a. Variable capacitance type with ranges not exceeding 150% of maximum expected input. Transducer shall have zero and span adjustment. Output shall be 2-wire 4-20 mA with 24 VDC input.
    b. Safe over pressure rating shall be minimum 5 times the range.
    c. Temperature compensated with thermal error of not greater than 0.04% of full scale in temperature range of 40 to 100 deg. F.
    d. Accuracy shall be 1% of full scale.

e. For pressure transducers used to measure room differential pressure, see "Room Differential Pressure Transmitter", specified further on in this specification.
f. Approved Manufacturers:
1) Air Monitor
2) Setra
3) Modus
4) Ashcroft
5) ACI (Automation Components Inc)

2. Air Static Pressure Sensors:
a. Duct mounted sensors shall be easily removable for cleaning, have multiple sensing ports, and fabricated of aluminum, copper, or SS. Sensors used in outdoor or condensing environments shall not be copper.
b. Wall or ceiling mounted sensors shall be shielded, suitable for surface or flush mounting, complete with multiple sensing ports, contain a pressure impulse suppression chamber, and fabricated of aluminum, paintable steel, or SS as required.
c. Outside air mounted sensors shall be shielded, complete with multiple sensing ports, maintain sensing accuracy regardless of wind flow direction or pattern, and fabricated of aluminum or SS.
d. Accuracy shall be 1% of actual pressure value.
e. Provide a companion 4" Magnehelic gauge, mounted at auxiliary panel, of appropriate span for each sensor. Gauges shall be graduated in inches W.C. Provide a phenolic identification tag for each gauge.
f. Approved Manufacturers:
1) Air Monitor
2) Siemens
3) Dwyer
4) Honeywell
5) ACI (Automation Components Inc)
6) Setra

3. Airflow Sensors:

SPECIFICATION EDITOR: UMH HAS FOUND THAT TRADITIONAL AIRFLOW TRAVERSE PROBE ASSEMBLIES (IE PICKUP ARRAY MOUNTED IN THE BELL OF THE FAN) INDUCE SUBSTANTIAL PRESSURE DROP AND INCREASED MOTOR HP. DO NOT USE UNLESS AIRFLOW MEASUREMENT IS INTEGRATED INTO THE FAN BELL HOUSING, AS SPECIFIED IN PARAGRAPH "A" BELOW. IF USED, THIS DETAIL SHOULD BE REFLECTED IN THE FAN SPECFICATION. INSTEAD, SPECIFY THERMAL DISPERSION TYPE AFMS UNDER PARAGRAPH B BELOW.

a. Airflow Traverse Probe Type:
1) Provide where indicated amplified signal airflow traverse probe(s) or airflow stations, capable of continuously monitoring the fan or duct capacities (air volumes) it serves.
2) Each airflow array shall contain multiple total and static pressure sensors integrated into the bell housing of the fan, and interconnected by their respective averaging manifolds.
3) Sensors shall not protrude beyond the surface of the fan bell housing so as not to induce a "system affect", nor shall be adversely affected by particle contamination normally present in building airflow systems.

4) Accuracy shall be a minimum of 3 percent of actual airflow over the designed range of flow.
5) Provide a companion 4" magnehelic gauge, mounted at auxiliary panel, of appropriate span for each sensor array. Gauges shall be graduated in CFM for airflow measurement. Provide a phenolic identification tag for each gauge.
6) Approved Manufacturers:
   a) Air Monitor
   b) Tek-Aire
   c) Dietrich-Standard
   d) Ramsey Air

b. Thermal Dispersion Type:
1) Sensors: Thermal mass flow, temperature and pressure compensating type.
   a) Each sensor shall have an accuracy of +/-2% of reading over the entire operating airflow range. Each temperature sensor shall have an accuracy of +/-0.15 degree F (+/-0.07 degree C) over the entire operating temperature range. Each sensor assembly shall be calibrated to standards of the National Institute of Standards and Technology (NIST).
   b) The combined accuracy of all components that make up the air measuring device shall meet the performance requirements specified above throughout the measurement range.
   c) Multiple sensor circuits shall be equally weighted and averaged by the sensor multiplexing unit and communicate digitally to the control transmitter.
   d) The operating temperature range for the sensor assembly shall be -20 degree F to 160 degree F (-29 degree C to 71 degree C). The operating humidity range for the sensor assembly shall be 0-99% RH (non-condensing).
   e) The number of sensors for each probe array shall be:

Duct or Plenum Area (sq.ft)	Total # of Sensors /Location
<2	4
2 to <4	6
4 to <8	8
8 to <16	12
> = 16	16

   f) Fan Inlet Sensor Probe Assemblies shall either be contoured, low profile sensor housings mounted on the fan inlet bell to reduce pressure drop and effect on fan performance or shall be a face mount probe and bracket spanning the fan bell opening. Designs mounted in the throat of the fan bell are not allowed. The operating airflow range shall be 0 to 10,000 fpm.

g) Duct/ Plenum mounted assemblies shall utilize bead-in-glass sensors/ elements housed in an anodized aluminum tube, suitable for duct/ plenum mounting. The operating airflow range shall be 0 to 5,000 fpm.

2) Accessories: Include probe mounted transmitter junction box, connecting cables, transmitter and system electronic enclosure with a velocity profiler with digital display. Provide analog (4-20mA, 0-10VDC) transmitter outputs for interface with DDC BMS.

3) Approved Manufacturers:
   a) Fan Inlet Assemblies: Ebtron GOLD Series
   b) Duct/ Plenum Assemblies: Ebtron GOLD Series, Air Monitor "Electra-flo"

4. Steam/Liquid Differential Pressure Transducers: (flow only)
   a. Each differential pressure transducer shall be selected and calibrated for operations between 0 and 125% of the normal differential pressure and up to 150-psig line pressure. The calibration point shall be rounded upward to the nearest 10 inches WC (for spans less than 200" WC) or to the nearest 5 psi for larger spans. Calibration date shall be included on an embossed tag attached to each transmitter.
   b. The accuracy, including linearity, hysteresis and repeatability, of the transducer for measuring differential pressure shall be better than 0.25% of the span stated above throughout a minimum of a 6:1 turndown. Turndown ratio shall be based on the actual flow span.
   c. The transducer shall not be damaged by pressures of up to 500 psig on either side of the transducer and all wetted parts shall be inert in the presence of up to a 40% concentration of ethylene or polypropylene glycol in water.
   d. Provide a drain valve for each side of the pressure chamber. Furnish and install mounting brackets appropriate for the installation location.
   e. Span and zero shall be individually adjustable.
   f. Shall be 2-wire and 4-20mA output.
   g. Approved manufacturers:
      1) Tobar
      2) ITT Barton
      3) Dietrich - Standard
      4) ABB
      5) Siemens
      6) Rosemont/Fischer
      7) Honeywell

5. Steam/Liquid Differential Pressure Transducers: (pressure only)
   a. Each differential pressure transducer shall be selected and calibrated for operations between 0 and 200% of the normal differential pressure. The calibration point shall be rounded upward to the nearest 10 inches WC (for spans less than 200" WC) or to the nearest 5 psi for larger spans. Calibration date shall be included on an embossed tag attached to each transducer.

b. The accuracy, including linearity, hysteresis and repeatability, of the transducer for measuring differential pressure shall be better than 2% of the span stated above throughout a minimum of a 4:1 turndown. Turndown ratio shall be based on the actual differential span.
c. The transducer shall not be damaged by pressures of up to 500 psig on either side of the transducer and all wetted parts shall be inert in the presence of up to a 40% concentration of ethylene or polypropylene glycol in water.
d. Provide a drain valve for each side of the pressure chamber. Furnish and install mounting brackets appropriate for the installation location.
e. Span and zero shall be individually adjustable.
f. Shall be 2-wire and 4-20 mA output.
g. Approved manufacturers:
    1) Tobar
    2) ITT Barton
    3) Dietrich - Standard
    4) ABB
    5) Siemens
    6) Setra

6. Indication Gauges for Steam/Liquid Pressure Transducers:
a. Each transducer shall come with an indicating gauge that reads in GPM for flow measurement or inches WC for pressure sensing. The gauge shall be analog differential pressure type piped in parallel to the transducer.
b. The analog pressure gauge shall be selected and calibrated for the same span as the transducer it serves.
c. The accuracy, including linearity, hysteresis and repeatability, of the gauge for measuring differential pressure shall be better than 3% of the span stated above throughout its span. Calibration data shall be included on an embossed tag attached to each gauge.
d. The gauge shall not be damaged by pressures of up to 500 psig on either side of the gauge and all wetted parts shall be inert in the presence of up to 40% concentration of ethylene or polypropylene glycol in water.
e. Scale shall be a minimum of 4.5" diameter. Furnish and install two bleed fittings for each gauge and mounting brackets appropriate for the installation location.
f. Gauges shall be field mounted. Provide a LPI for readout at the DDC panel array. Provide a phenolic identification tag for each gauge and indicator.
g. Approved manufacturers:
    1) Beckman
    2) Moore
    3) Testoterm
    4) Dwyer
    5) Transducer manufacturer’s gauge

7. Steam/Liquid Flow Sensors: (differential pressure type)
a. Uni-directional sensors shall be of the venturi type or velocity pressure type. They shall be constructed of stainless steel, sized to the system's range of flow, and have an accuracy of 0.5%.

b. Bi-directional sensors shall be of the velocity pressure type. They shall be constructed of stainless steel, sized to the system's range of flow, and have an accuracy of 0.5%.

c. Approved Manufacturers
   1) Preso
   2) Gerand
   3) Dietrich-Standard (Annubar Diamond II)

8. Three Valve Manifolds for Steam/Liquid Pressure Transducers:
   a. Provide a three-valve manifold for each transducer. Pressures of up to 500 psig shall not damage the manifold. All wetted parts shall be inert in the presence of up to a 40% concentration of ethylene or polypropylene glycol in water.
   b. The manifold shall be designed for direct mounting on the transducer it serves and utilizes two quarter turn valves to provide zeroing, blocking and normal service modes.
   c. Approved Manufacturers:
      1) D/A Manufacturing
9. Liquid Flowmeters: (Electro-Magnetic Type)
   a. The meter system shall consist of a primary flow sensor and transmitter. The flow sensor shall be equipped with 150-lb. flanges. The meter system shall be installed with all necessary grounding components and gaskets per manufacturer's instructions. The meter shall be capable of bi-directional operation. The meter shall be sized appropriately for the range of flow for the system. The electrodes shall be SS or Hasteloy C. The transmitter shall be provided with a remote mounting bracket, cable, integral LCD display, NEMA 4X housing, shall indicate flow rate and totalize flow, shall have an isolated 2-wire 4-20 mA linear output flow rate signal, and shall have a pulsed output signal for totalization. The transmitter shall be capable of being field calibrated and reprogrammed from the outside housing via magnetic probe or security protected integral keypad menu switching. Unit electronics shall have noise immunity. The primary flow sensor and transmitter shall be mounted in accessible locations. Unit shall have the capability to maintain flow total in non-volatile memory. The flowmeter and transmitter as a unit shall have the following minimum characteristics:
      1) Flowmeter Liner:
         a) Heating hot water, domestic hot water, and other water systems operating at or above 110°F: Teflon
         b) Chilled water, domestic cold water, and other water systems operating below 110°F: Polyurethane
         c) Steam condensate: Teflon to 300°F, Ceramic over 300°F, and as suitable for the expected fluid conditions.
      2) Accuracy:
         a) At 1 to 33 feet per second velocity: ±0.5% of rate.
         b) At 0.3 feet per second velocity: ±2% of rate.

3) Each unit shall be factory calibrated for the specified flow and shall be calibrated in both directions if the application is bi-directional. Calibration shall be a minimum of three point. Specific performance test data shall be furnished with the meter.
4) Each meter shall provide two analog 4-20 mA signals or a single 4-20 mA signal and a digital contact closure on reverse flow.
5) Meters for steam condensate shall be capable of sensing with condensate conductivity down to 6 µS/cm.

b. Provide a phenolic tag for each transmitter to identify service and meter ID number (i.e. SECONDARY CHILLED WATER FLOW, FM-1, etc.).

c. Approved Manufacturers (Water)
1) ABB
2) Siemens
3) EMCO
4) Rosemount
5) Krohne

d. Approved Manufacturers (Steam Condensate)
1) Rosemount
2) Krohne
3) ABB

10. Steam (Vapor) Flowmeters (Vortex-shedding type):

a. The meter system shall consist of a primary flow sensor and transmitter. The flow sensor body and wetted parts shall be SS, and shall be flanged and suitable for the service rating. The meter shall be installed with all necessary grounding components and gaskets per manufacturer's instructions. The transmitter shall be provided with a remote mounting bracket and cable, integral LCD display, NEMA 4X housing, shall indicate flow rate, totalized flow, shall have an isolated 2-wire 4-20 mA linear output flow signal and a pulsed output signal for totalization. The transmitter shall be capable of being field calibrated and reprogrammed from the outside housing via magnetic probe or security protected integral keypad menu switching. Unit electronics shall have noise immunity. Unit shall have the capability to maintain flow total in non-volatile memory. The primary flow sensor and transmitter shall be mounted in accessible locations. The flowmeter and transmitter as a unit shall have the following minimum characteristics:
1) Temperature range shall be -40-750°F.
2) Accuracy shall be 1.0% of rate and 0.1% of full scale.
3) Repeatability shall be 0.15% of flow rate.
4) Each meter shall be factory calibrated for the specified flow range prior to shipment and specific performance test data shall be furnished with the meter.
5) Meter range shall accommodate the minimum and maximum expected flow for the steam pressure at the installed location.
6) Meter shall be equipped with a temperature and pressure compensation feature.

b. Provide a phenolic tag for each transmitter to identify service and Meter ID number (i.e. MEDIUM PRESSURE STEAM FLOW - LSI BUILDING, etc.).

c. Approved Manufacturers
   1) Rosemount
   2) Krohne
   3) ABB

11. Steam (Vapor) Flow Meters (Differential-pressure type)
   a. The meter system shall consist of a differential pressure primary flow element, a differential pressure transmitter (or transmitters), and a flow monitor/computer. The flow sensor body and wetted parts shall be SS, and shall be equipped with 150-lb. flanges. The transmitter(s) and flow computer shall be provided with a remote mounting bracket and cable, integral LCD display, and NEMA 4X housing. Flow computer shall indicate flow rate and totalized flow, shall have an isolated 2-wire 4-20 mA linear output signal and a pulsed output signal for totalization. Unit electronics shall have noise immunity. The transmitter shall be capable of being field calibrated and reprogrammed from the outside housing via magnetic probe or security protected integral keypad menu switching. Unit shall have the capability to maintain flow total in non-volatile memory. The flowmeter and transmitter as a unit shall have the following minimum characteristics:
      1) Temperature range shall be -40-750°F.
      2) Accuracy shall be 1.0% of rate or better and 0.1% of full scale.
      3) Repeatability shall be 0.15% of flow rate.
      4) Each meter shall be factory calibrated for the specified flow range prior to shipment and specific performance test data shall be furnished with the meter.
      5) Meter range shall accommodate the minimum and maximum expected flow for the steam pressure at the installed location.
      6) Meter shall be equipped with a temperature and pressure compensation feature.
      7) V-cone horizontal pilot lines shall be pitched back to steam lines and shall not trap condensate.
   b. Provide a phenolic tag for each meter to identify service and Meter ID number (i.e. MEDIUM PRESSURE STEAM FLOW - LSI BUILDING, FM-1 etc.).
   c. Approved Manufacturers
      1) McCrometer (V-cone-style meter)
      2) Preso (Venturi-style meter)
      3) Gerand Engineering (Venturi-style meter)

TWO METHODS OF CALCULATING ENERGY CONSUMPTION (BTUS), WITH THE RESPECTIVE EQUIPMENT REQUIRED, ARE SPECIFIED BELOW: (1) BY THE DDC SYSTEM OR (2) BY A "BTU METER". 12.b IS USED WHEN UTILITY (REVENUE) BILLING OF A SYSTEM IS PLANNED. 12.a IS USED WHEN ENERGY CONSUMPTION IS COLLECTED FOR INFORMATIONAL PURPOSES ONLY. ASSURE THE CONTROL DRAWINGS INDICATE WHICH METHOD, IF ANY, IS TO BE USED FOR EACH SYSTEM.

12. BTU Metering
   a. DDC BTU metering shall be accomplished using the following equipment at each metering point:
      1) One (1) liquid flowmeter unit with transmitter as specified elsewhere in this section.

2) Two (2) high-precision matched temperature sensor assemblies with transmitters as specified elsewhere in this section. Sensor with SS well shall be installed in each respective supply and return pipe as shown on project drawings.
3) These devices shall be wired to a local DDC panel. Calculations for instantaneous and totalized load shall be incorporated into the panel control code, and the necessary virtual points shall be created to allow remote monitoring and trending via the DDC system.

b. When a BTU meter is indicated on the control drawings, provide a flow/BTU computer which is programmable for various flow meter types including linear, square law, or multi-point linearization data interpretation.
1) Inputs shall include:4-20ma flow from flow meter and 4-20ma from two temperature sensors.
2) Flow and temperature inputs shall be simultaneously connected to this computer and looped to the local DDC panel.
3) Flow/ BTU computer shall operate in an environment of 0 to 50 C, shall include a keypad for data input and retrieval, and an EEPROM/nonvolatile RAM. Unit shall calculate and provide:
a) Two 4-20ma analog outputs indicating btu, mass or volume flow rate, temperature 1, temperature 2, delta temperature, pressure, density, and peak demand.
b) One isolated pulse output indicating btu, mass or volume total
c) Two NC/NO relay outputs assignable to trip according to various rate, total, temperature or pressure readings, programmable as latching or non-latching, or as pulsed output of a total.
4) Outputs shall be stored in a battery backed data logger, selectable for continuous or periodic log modes.
5) Unit shall have a real time clock and shall date stamp logged data. Unit shall have an RS-232 port and shall be capable of setup from a laptop computer. The supplier shall set up and verify BTU measurement and shall train U of M personnel in all aspects of BTU computer setup and operation.
6) Computer shall calculate and display heat, mass or Volume flow rate, resettable total, non-resettable total, temperature input 1, temperature input 2, delta temperature, density, pressure, peak demand, and time/date stamp.
7) Provide a phenolic tag for each transmitter and flow computer (as applicable) to identify service and ID number (i.e. CHILLED WATER BTU METER – LSI BUILDING, etc.).
8) Mount Flow/BTU computer in a NEMA 4 enclosure: Minimum size 16” (H) x 14” (W) x 8” (D), hinged cover, padlockable latch, and stainless steel hinge. Provide cutout in enclosure face and mount computer in face. Where multiple computers are supplied, they may be mounted in a common enclosure.

9) Approved Manufacturers and Models for Flow/BTU Computer:
a) Kessler-Ellis Supertrol II with MS816 enclosure.

D. Electronic to Pneumatic Transducers

1. Provide transducers to convert electronic signals from the DDC analog output modules to linear proportional pneumatic signals for all DDC controlled modulating pneumatic devices. The transducer shall be a panel-mounted device, with hand/auto switch, override dial for manual override control, and a 0-30 psig output gauge. Supply voltage shall be 19-26 VAC. Control signal shall be 0-10 VDC or 4-20 mA. Output accuracy shall be 1/4 psig at 75 Deg. F, producing a 0-15 psig pneumatic signal. Output repeatability shall be .05 psig maximum. Transducers shall be high capacity non-bleed devices with a minimum output capacity of 500 SCIM, except special circumstances that require a constant bleed controller with branch exhaust on signal loss.
2. Approved Manufacturers:
a. Non-bleed Type:
1) Siemens
2) ACI - EPC
3) Kele
4) Mamac
b. Bleed Type:
1) ACI - EPC

E. Pressure to Electronic Transducers

1. Provide transducers to convert linear proportional pressure signals to DDC analog input modules. The transducer shall be a panel-mounted device, with input pressure snubber, as required, and gauge. Supply voltage shall be 19-26 VAC. Control signal shall be 4-20 mA. Accuracy shall be 1 percent full scale. Thermal effect shall be less than 1 percent full scale on zero and less than 1 percent of reading on span. Transducer shall have elastomer seals and SS wetted parts.
2. Approved Manufacturers:
a. Siemens
b. Setra
c. Modus
d. ACI
e. Dwyer

F. Carbon Dioxide Sensors:

1. Carbon dioxide sensing cell shall consist of a nondispersive infrared carbon dioxide gas cell that uses a pulsed source and has no free air optical path. Output shall be linearized 4-20 mA for use with 24 VDC input. The unit shall be specifically designed for the wall or duct application specified. Duct aspiration boxes shall be by the manufacturer. Unit shall have span adjustment. The unit shall have no moving parts.
2. Minimum requirements:
a. Range: 0-2,000 ppm
b. Accuracy: 3 % of full scale
c. Repeatability: 1% of full scale
d. Power Consumption: less than 3 watts
e. Zero Drift at Constant Temp.: 100 ppm per 24 hrs(random not cumulative)

f. Max. allowable Drift in 1 year: 20 ppm

3. Unit shall not require calibration for a period of 1 year or more.
4. Approved Manufacturers:
   a. Valtronics
   b. GE/ Telaire

G. Carbon Monoxide and Combustible Gas Sensors:

1. Sensors shall be a micro-processor-based system for continuous monitoring and use catalytic, electro-chemical, diffusion cell, or solid-state type sensing. Output shall be linearized 4-20 mA for use with 24 VDC input with green LED normal operation indicator. Unit shall provide a SPDT pilot duty low voltage alarm contact with an adjustable set point. The unit mounting shall be wall, duct aspiration, or ceiling to suit application. The unit shall specifically designed for the application and shall be explosion proof, as required. Unit shall have single point set point and span adjustment. The unit shall have no moving parts. Units mounted outdoors shall be waterproof and rustproof.
2. Minimum requirements:
   a. Range: as required for application; ppm, %, %L.E.L.
   b. Accuracy: 3-5% of full scale
   c. Repeatability: 1% of full scale
   d. Power Consumption: 5 watts or less
   e. Relay contact rating: 5 amp at 24 VDC, 150 VA max. inductive
   f. Zero Drift at Constant Temp.: 0 per 24 hrs (random not cumulative)
   g. Max. allowable Drift in 1 year: 1% of full scale.
3. Approved Manufacturers:
   a. Draegar
   b. Honeywell Analytics (Vulcain)

H. Current Sensing Relays

1. Provide current sensors with donut transformers capable of monitoring AC current, maximum input current ranges from 20 to 300 amp, peak, with digital output signals having adjustable high and low current trips. An LED shall provide visual indication and shall not bleed through.
   a. Provide special current sensing relays designed to monitor belt breakage, when indicated or described in the Sequence of Operation.
2. Approved Manufacturer:
   a. Neilsen Kuljian
   b. Veris Industries
   c. ACI (Automation Components Inc)

I. Liquid Detectors

1. Liquid detectors shall utilize microchip technology for detection of conductive liquids through one of the following types of sensors: gold-plated probes, self-adhesive sensor tape with copper electrodes and durable cotton cover, or rope type sensor. Detectors shall be selected based on the best use for the application. Power requirement shall be 11-27 VAC or VDC and have a green LED normal operation indicator. Unit shall have a SPDT pilot duty low voltage alarm contact. Unit shall be waterproof and rustproof. A red LED shall indicate the presence of liquid. Unit shall have an adjustable set point.
2. Approved Manufacturers- Spot Detectors:
   a. DiversiTech "Wet Switch"
   b. Water Alert
3. Approved Manufacturers- Rope or Ribbon Detectors
   a. RLE Technologies
   b. Water Alert
   c. Kele

2.7 ELECTRIC COMPONENTS

A. Components shall be Honeywell, Johnson, or Siemens, unless listed otherwise.

B. Low temperature detection thermostats shall be duct type, fixed 5 deg. F differential, range 30 to 60 deg. F. Sensing element shall have a 20-foot long capillary tube responding to the lowest temperature sensed along any 12 inches of bulb length. Switch shall be SPDT 120 VAC, UL listed, rated for 10 amps at 120 VAC full load. Unit shall be manually reset. Provide one thermostat for every 20 square feet of coil surface.

C. High temperature detection thermostats shall be two-position type, range and element shall be suitable for the service, single or double pole, normally open or normally closed as required. Set point shall be adjustable over the full range. Switch shall be UL listed, rated for 10 amps at 120 VAC full load. Unit shall be manually reset.

D. Immersion electric thermostats shall be two-position type, range and element shall be suitable for the service, single or double pole, normally open or normally closed as required, with stainless steel separable well. Set point shall be adjustable over the full range. Switch shall be UL listed, rated for 10 amps at 120 VAC full load.

E. Remote-bulb electric thermostats shall be two-position type, range and element shall be suitable for the service, single or double pole, normally open or normally closed as required, with stainless steel separable well as required. Set point shall be adjustable over the full range. Switch shall be UL listed, rated for 10 amps at 120 VAC full load.

F. Wall-mounted electric thermostats shall be two-position type, range and element shall be suitable for the service, single or double pole, normally open or normally closed as required. Set point shall be adjustable over the full range. Switch shall be UL listed, rated for 10 amps at 120 VAC full load.

G. Strap-on electric thermostats shall be two-position type, range and element shall be suitable for the service, single or double pole, normally open or normally closed as required. Set point shall be

adjustable over the full range. Switch shall be UL listed, rated for 10 amps at 120 VAC full load.

H. Differential Pressure Switches:

1. Shall provide electrical switching action upon a sensed pressure differential increase between two points. Sensitivity shall be suitable for the application. Set point shall be adjustable over the full range of the device. Switching action shall SPDT. Electrical switch rating shall be 10 amps at 120 VAC, minimum.
2. Pressure rating of switch and connecting tubing:
   a. Fan - Rated for 12 inches WC.
   b. Pump – Maximum deadhead system pressure.
3. Switches used for safety shutdown applications shall be of the manual reset type.
4. Approved Manufacturers:
   a. Honeywell
   b. Siemens
   c. Dwyer
   d. Cleveland Airflow

I. Limit Switches:

1. Limit switches shall be oil tight type with appropriate operator to provide required function.
2. Approved Manufacturers:
   a. Honeywell
   b. Siemens
   c. Allen-Bradley
   d. GE
   e. Square D

J. Control Relays and Contactors:

1. Relays shall be a minimum DPDT, of proper coil voltage, with neon indicator light, and of sufficient rating for specified purpose. Relay base shall be of the screwed terminal type.
2. Contactors shall be definite purpose type, have adequate number of poles, of proper coil voltage, and of sufficient rating for specified purpose. Contactors used for DDC interface control shall contain a Hand-Off-Auto switch.
3. Approved Manufacturers:
   a. Dayton
   b. Siemens
   c. Allen-Bradley
   d. GE
   e. Square D
   f. Functional Devices- RIB
   g. IDEC
   h. Omron

K. Selector Switches:

1. Switches shall be multiple position type, oil-tight, watertight, dust-tight, have the adequate number of contact blocks, capable of additional contact blocks, and of sufficient rating for specified purpose. Nomenclature plate shall be provided with appropriate wording, units, etc.
2. Approved Manufacturers:

a. Dayton
b. Siemens
c. Allen-Bradley
d. GE
e. Square D

L. Push Buttons and Pilot Lights:

1. Push button switches and pilot lights shall be, oil-tight, watertight, dust-tight, have the adequate number of contact blocks, capable of additional contact blocks, and of sufficient rating for specified purpose. Nomenclature plate shall be provided with appropriate wording, units, etc.
2. Pilot lights shall be neon or LED, push-to-test type with replaceable lens. Lens shall be of the appropriate color for application served.
3. Approved Manufacturers:
   a. Dayton
   b. Siemens
   c. Allen-Bradley
   d. GE
   e. Square D

M. Fuse Holder/Disconnects:

1. Fuse holder/disconnects shall be provided for all control circuits inside auxiliary control panels, and shall be of appropriate size/type for service.
2. Approved Manufacturers:
   a. Little Fuse
   b. Dayton
   c. Buss
   d. GE

N. Terminal Blocks:

1. Terminal blocks shall be modular, barrier type, direct mount, single pole, and snap together to any required number of poles. Units shall be rated for 300 volts, 20 amp., handle wire sizes from 22-12 AWG, and have a marking strip for identification.
2. Approved Manufacturers:
   a. Cooper-Bussman
   b. Weidmuller
   c. Kele
   d. Buss
   e. GE

O. Toggle Switches:

1. A toggle switch shall be provided for every auxiliary and local control panel that utilizes a 120 VAC power source as a means to turn off the power to that panel and shall be of appropriate size/type for service. Toggle switches shall be rated 120/277 volts, 20 amps, SPDT, specification grade, extra-heavy duty, back and side wired, with brown handles.
2. Approved Manufacturers:
   a. Leviton
   b. Pass & Seymor
   c. Hubbell
   d. Arrow Hart

e. Bryant

2.8 ELECTRICAL ACCESSORIES

A. Wiring and Conduit

1. The MSCC shall provide all DDC and related control wiring, conduit, and J-hook cable hanging system. Wire and cable shall be pulled from device or control point to the DDC, Auxiliary, UPS, or LPI panels and run between DDC, Auxiliary, UPS, or LPI panels, with 6'-0" spare coiled at the panel. All wire and cable shall be labeled and tagged 4 inches down from the point at which the wire enters the cabinet with the corresponding point number.
2. All wiring carrying voltages greater than 24 volts shall be run in conduit.
3. All wiring carrying voltages 24 volts nominal or less shall be run as follows:
   a. Wiring routed in shafts, walls, below grade, and in any concealed or inaccessible space, or above ceilings requiring the use of a tool to access or held in place by clips or similar devices: run wiring in conduit.
   b. Wiring routed in exposed locations such as mechanical and electrical rooms or in rooms without ceilings (i.e. exposed to deck above): run in conduit.
   c. Network wiring: run in conduit to nearest cable tray.
   d. DDC wiring above accessible lay-in ceiling areas: Utilize J-hook hangers and/ or utilize facility cable tray.
      1) Provide UL Listed zinc electro-plated steel or plastic J-hooks, sky blue color, plenum use approved, with minimum 1-inch wide cable support area, rated for the cable type being supported. Provide with integral cable retainer strap to provide containment of cables within the hanger.
      2) Install J-hooks with J-hook bottoms a minimum of 10 feet A.F.F. and no less than 2 feet above the ceiling.
      3) Space hangers at maximum 5 foot intervals, with additional hangers located a maximum of 3 feet from both sides of any change in direction. Wiring shall not sag more than 12 inches between J-hooks. Install wiring and J-hooks in a neat and workman-like manner, routed parallel or perpendicular to the building column lines.
      4) Install to protect wire from damage and to allow for wire replacement. Do not exceed 50 % of the wire capacity specified by the J-hook manufacturer (first installation), or route control wiring in non-control-wiring J-hooks.
   e. Wiring to wall mounted devices such as room sensors, switches, and similar devices:
      1) NEW CONSTRUCTION: Route wiring in wall in minimum 1/2 inch conduit. Stub conduit up/down into accessible ceiling space, terminating conduit with a 90 degree bend and a strain relief to prevent wire damage. Install wall box for device mounting.

2) RETROFIT (EXISTING WALL CONSTRUCTION): Route wiring in wall, no conduit is required. Install wall box for device mounting.

f. Wiring to perimeter radiation valves and similar control devices requiring wiring to be routed in walls: Route wiring in wall in minimum 1/2 inch conduit. Stub conduit up/down into accessible ceiling space, terminating conduit with a 90 degree bend and a strain relief to prevent wire damage. Provide maximum 12 inch long flexible metal conduit for the final connection to the device.

4. Conduits shall be sized on a maximum fill of 40% capacity.
5. Four separate conduit systems shall be provided:
   a. DO/DI and 120 VAC control wiring.
   b. AO/AI wiring.
   c. Pneumatic tubing.
   d. Network cables.

   Exception: DO's, DI's, AI's, and AO's (including pneumatic tubing) installed between VSD's and DDC panels may share the same conduit.
6. All junction boxes and couplings on conduit containing DDC related wiring or pneumatic tubing shall be painted sky blue color. Alternative: Allied Tube True Color® EMT, color blue, may be used in lieu of painted fittings and junction boxes.
7. All exposed DDC wiring shall utilize a sky blue insulation outer jacket color.
8. Data transmission cabling and equipment grounding procedures shall meet the latest FCC guidelines for electromagnetic field generation.
9. All control wiring sizes and types shall meet the equipment manufacturer's recommendations.
10. All control wiring shall have insulation rated for 300 volts minimum, and be installed per NEC requirements. Exposed wiring running in return plenums, air handling devices, and where required by code shall be plenum rated.
11. Wiring Requirements For Controllers on Air Terminal Units:
    a. Provide all necessary 24 VAC transformers, 24 VAC power distribution wiring, etc. to controllers for a complete operating system. Transformers shall have primary and secondary fuse protection and shall be mounted in an electrical closet, auxiliary panel or other suitable accessible location with disconnecting means. Provide a pilot light for each transformer, to indicate the presence of load power.
    b. Terminal fittings or insulating bushings shall be used to protect wiring associated with controllers at enclosures, junction boxes, etc.

B. Provide all necessary 24 VAC transformers, 24 VAC power distribution wiring, etc. for a complete operating system. Transformers shall have primary and secondary fuse protection and shall be mounted in an electrical closet, auxiliary panel or other suitable accessible location with disconnecting means. Provide a pilot light for each transformer, to indicate the presence of load power.

C. Provide conduit and wiring to power all 120 VAC control accessories such as flow meters, BTU meters, and actuators. Feed this power from an auxiliary control panel, with a separate disconnect and fuse, located in the auxiliary panel.

D. For air terminal controllers, provide 120 VAC conduit and wiring between electrical panels and controller power supply transformers. Power for terminal controllers shall be from a dedicated 20A power circuit, as shown on construction documents (CD's). In general, only one circuit shall be allowed per electrical closet, unless otherwise directed by project engineer.

1. For renovation work, MSCC shall utilize existing dedicated circuit when available and either utilize existing transformer if adequate or provide new transformer(s). When an existing dedicated circuit is not available, provide new per above and as shown on construction documents. When not shown on CD's, request proper circuiting by project engineer.

SPECIFICATION EDITOR: THE AE SHALL CLEARLY INDICATE SOURCE OF POWER FOR ALL DDC CONTROLS. POWER SOURCE (NORMAL VS EMERGENCY) & PRIORITY SHALL MEET OR EXCEED THAT OF THE EQUIPMENT BEING CONTROLLED.

E. Power source (i.e. normal vs. emergency power & emergency power priority) to all controllers and associated controlled devices shall match that of the equipment and/ or system being controlled.

2.9 AUTOMATIC CONTROL VALVES AND ACTUATORS

A. General:

1. With the exception of air terminal controllers, actuators shall be pneumatic unless specifically noted otherwise on the drawings.
2. Valve bodies 2 inches IPS and smaller shall be single seated bronze and shall have screwed end connections. Valve bodies 2-1/2 inches IPS and larger shall be cast iron and shall have flanged end connections. Valve stem packing shall be tetrafluorethylene, spring-loaded, self-adjusting. Packless construction is acceptable. Valve linkage shall have an adjustment for valve lift. Valve to have rising stem, renewable seat and disc, repackable under pressure.
3. Valve rangeability shall be no less than 50:1 for valve $C_v \leq 1$, no less than 100:1 for valve $C_v > 1$.
4. When indicated, provide separate SPDT limit switches which actuate at the full open and full closed valve position.

B. High performance butterfly valves may be used when approved for valves 2-1/2" and larger and shall be full lug, have carbon steel body, 316 stainless steel offset disc, one-piece stainless steel shaft and bearings with thrust surfaces, PTFE seat, Teflon stem packing and rated for 150 psi and 450 degrees F, and in compliance with Related Section "Valves".

STEAM CONTROL VALVES: REVISE THE VALVE PRESSURE DROP SPECIFIED BELOW TO THAT APPROPRIATE FOR YOUR PROJECT. FOR EXAMPLE, FOR LOCATIONS CLOSE TO THE CENTRAL POWER PLANT, A PRESSURE DROP HIGHER THAN THE INDICATED 4 PSIG WOULD BE APPROPRIATE. ALSO NOTE THAT THE BELOW VALVE SIZING CRITERIA ASSUMES THAT THE STEAM PRESSURE REQUIREMENT FOR THE EQUIPMENT SERVED BY THE CONTROL VALVE IS 1 PSI OR LESS. ALWAYS VERIFY THE EQUIPMENT PRESSURE REQUIREMENT AND MODIFY THE BELOW ACCORDINGLY.

C. Steam valve bodies and trim shall be rated for scheduled saturated steam service pressures. Steam valve replaceable plugs and seats shall be stainless steel, hardened to not less than 500 Brinnel. Valves shall have modified linear characteristics and shall be sized based on a 5 psig inlet pressure and a maximum drop of 4 psig.

ALTHOUGH AVAILABLE UP TO 4", BALL VALVES SHOULD TYPICALLY ONLY BE USED FOR SMALL CONTROL VALVE APPLICATIONS, E.G. FAN COILS. THIS SPECIFICATION IS ONLY FOR BALL VALVES UP TO 3/4" DIAMETER. DESIGNER SHALL SPECIFICALLY NOTE ON THE DESIGN DRAWINGS WHERE BALL STYLE CONTROL VALVES WITH ELECTRIC ACTUATORS ARE TO BE USED. BE AWARE OF THE MAXIMUM DIFFERENTIAL PRESSURE RATING (E.1.H) FOR THESE TYPE VALVES. NOTE THAT THE MINIMUM FLUID TEMP. RATING IS 35˚F; THIS BALL VALVE SPEC IS NOT SUITABLE FOR LOW TEMP SERVICE, HOWEVER LOW TEMP TRIM IS AVAILABLE, CONSULT MFR.S.

D. Ball Style Control Valve and Actuator Assembly (permitted only where specifically noted on the design drawings):

1. Control Valve Body: Quarter turn ball valves, 2-way and 3-way configuration as indicated, for 2 position or modulating service, with the following features:
   a. 1/2" or 3/4" valve size.
   b. Forged brass body with female NPT end connections.
   c. Nickel or chrome plated brass ball, with Teflon reinforced EPDM O-ring seals.
   d. Blow-out proof brass stem with double O-ring EPDM seals.
   e. Shall provide safe and reliable operation in water or in up to 50% glycol/water solutions, at fluid temperatures between 35°F and 212°F and static pressures up to 300 psi.
   f. Ball and stem seals shall be formulated to prevent degradation by typical water treatment chemicals and Chloramines.
   g. Minimum close-off rating: 200 PSI.
   h. Differential pressure rating (valve operating): 30 PSID maximum.
   i. Downstream leakage: maximum of 0.01% of design flow at rated close-off differential pressure.
   j. 0 - 90 degree angle of rotation.
   k. Valves for modulating service shall be equipped with a characterized ball (glass filled polymer flow insert) that provides an equal percentage flow characteristic.
   l. Valves for two position control shall be reduced port type as required for the appropriate valve Cv.
   m. Provide valves with the flow coefficient indicated, or if not indicated, subject to engineer's approval, with a Cv appropriate for good control and considering the system differential pressure available.
2. Actuators: UL listed electronic rotary actuator designed for operation with the ball type control valve, with the following features:
   a. The actuator shall be of the same manufacturer as the valve body and shall be integrally mounted to the valve at the factory.
   b. For direct coupling to the valve shaft without the use of linkages, to an ISO-style mounting pad.
   c. Minimum cycle life: 60,000 full strokes at maximum rated torque.

d. Torque: as required for smooth positioning and closure of the valve against a maximum differential pressure of 30 PSI and to provide close-off up to 200 PSI.
e. Motor runtime to rotate the valve ball 90°: 90 seconds maximum, 20 seconds minimum.
f. Spring return runtime to rotate the valve ball 90°: 90 seconds maximum, 20 seconds minimum.
g. For use with a 24VAC power supply with the ability to operate off the same power supply required for the temperature controller.

MODIFY THE NEXT TWO PARAGRAPHS TO MATCH THE CONTROL TYPE (MODULATING OR TWO POSITION) AND FAILURE MODE REQUIRED.

h. 2-pipe fan coils: Normally open spring return actuation, for use with 0-10Vdc output proportional plus integral room controllers, fully compatible with the specified temperature controller.
i. 4-pipe fan coils: For use with 0-10Vdc output proportional plus integral room controllers, fully compatible with the specified temperature controller.
   1) Heating coil: Normally open spring return actuation.
   2) Cooling coil: Normally closed spring return actuation.
j. Electronic stall detection/overload protection. Actuator shall sense that maximum rotational position has been reached even when control signal is still applied and stop rotating prior to actuator damage.
k. Rotation mechanically limited by adjustable integral limit stops.
l. Mechanical range adjustment.
m. Valve position indicator.
n. Actuator/actuator housing: Brushless DC motor design, NEMA type 1 or 2 enclosure, die-cast aluminum alloy or UL 94 listed plastic housing, lubricated gears, with a thermal barrier to prevent condensation on the actuator parts when used for chilled water applications. It shall be possible to rotate the actuator to any of four rotational angles in 90° increments, relative to the valve body.
o. Ambient temperature operating range: -20°F and 120°F.
p. Maximum actuator noise level, running or spring return: 40 dBA.

3. 2 year unconditional warranty, parts and labor. 5 year unconditional parts warranty.

E. Hydronic system valve bodies and trim shall be rated for service pressures through 125 psig at 250 deg. F, globe style. Hydronic system valves shall have replaceable plugs and seats of SAE 72 brass or AISI 300 series stainless steel, selected for maximum lift under application conditions. Maximum pressure drop across any hydronic system valve at maximum flow and valve size shall be as indicated. Two-way valves shall have equal percentage characteristics for heating and cooling applications, either linear or equal percentage for other applications as appropriate, linear for three-way valves. When not indicated, valves shall be sized for a pressure drop of 3 psig for chilled water and 4 psig for hot water.

F. Standard Valve Actuators:

1. Pneumatic, rolling diaphragm, spring loaded, piston type.
2. Spring range shall be as required for non-overlapping sequencing or as indicated on drawings.
3. Ratio relays or cumulators used for sequencing valves are not acceptable unless specifically indicated on the drawings.
4. Valves shall spring return to normal position as indicated.
5. Select with sufficient close-off power for system pressure, pump shut off head, highest operating torque, and torque requirements of valves that may stick because of infrequent use.
6. Select to provide smooth proportioning control under operating conditions normal to the system.

G. Butterfly Valve Actuators:

1. Pneumatic actuators shall be rotary type with rack and pinion to provide constant output torque rated for at least 125 percent, pilot positioner with gauges, spring return, adjustable travel stops, factory tested, factory lubricated, self-draining body, integral pneumatic parting, localized mechanical position indicator readable at 25 feet, 0-90 deg. reversible operation, capable of operating in any valve mounting attitude, capable of being mounted in line or transverse to pipeline, and bolt directly to valve top plate. Valves shall be actuated with 60-psig air and 3-15 psig pilot service. Valves used for isolation do not require pilot positioners. Actuator shall include a manually operated hand wheel for manual override.

SPECIFICATION EDITOR: WHEN THE USE OF ELECTRIC ACTUATORS IS PLANNED THE METHOD OF GETTING POWER TO THOSE ACTUATORS MUST BE CONSIDERED. READ THE BELOW SPEC SECTION CAREFULLY AND NOTE THE SIZE RANGE FOR VARIOUS ACTUATOR VOLTAGES. THE CONTROLS CONTRACTOR SHALL NOT RUN POWER WIRING ABOVE 120V. THEREFORE:

FOR 120V ACTUATORS, POWER TO SUCH ACTUATORS IS THE RESPONSIBILITY OF THE CONTROLS CONTRACTOR AND IS TO BE ROUTED FROM THE DDC AUXILIARY PANEL (SEE SECTION 2.8). IF YOUR PROJECT HAS A LARGE NUMBER OF 120V ACTUATORS THE STANDARD (2) 20 AMP CIRCUITS RUN TO THE DDC AUX. PANEL MAY NOT BE ENOUGH. DETERMINE THE TOTAL AMPERAGE OF SUCH ACTUATORS AND DIRECT THE ELECTRICAL DESIGNER TO DESIGNATE ADDITIONAL 120V CIRCUITS TO THE DDC AUX. PANEL, IF REQUIRED.

FOR 208V OR 480V ACTUATORS, POWER TO THE ACTUATORS SHALL BE DESIGNATED AS THE RESPONSIBILITY OF THE ELECTRICAL CONTRACTOR. FOR THESE HIGH VOLTAGE ACTUATORS, DIRECT THE ELECTRICAL DESIGNER TO INDICATE POWER TO EACH ACTUATOR ON THE ELECTRICAL DRAWINGS. THIS POWER SHALL NOT BE RUN OUT OF OR THROUGH THE DDC AUXILIARY PANEL.

2. Electric actuators shall have permanent split capacitor, reversible electric motor which drives a compound epicyclic gear, thermal overload protection, factory tested, factory lubricated, localized mechanical position indicator readable at 25 feet, 0-90 degree reversible operation, bolt directly to valve top plate. Housing shall be weatherproof and suitable for outdoor location. Provide thermostatically controlled heater for prevention of condensation at low temperatures. Actuator voltage shall be 120 VAC through 12" and 208 or 480 VAC above 12". 120V actuators shall be fed out of the auxiliary panel with a separate disconnect and fuse. Disconnect and fuse to

be located in the auxiliary panel. 208V or 480V actuator power shall be provided to 208/480V actuators by others. In all cases the MSCC shall provide the required control wiring to the actuators. Actuator ambient temperature range shall be -20 deg. F to +140 deg. F. Actuator shall include a manually operated hand wheel for manual override of the valve position.

H. Electronic valve actuators used with air terminal controllers shall be 24 VAC and use 3-position floating control, 7/32" (5.5 mm) stroke minimum, shall be direct-coupled to valve bodies without the use of tools, shall have sufficient power to prevent valves from lifting off their seats, shall provide visual position indication, shall include manual override knob, and shall be UL-listed for plenum installations. Actuators shall be fail-safe or fail-in place as follows:

1. Actuators shall be fail-safe open for perimeter heating applications.
2. Actuators shall be fail-in-place for reheat control valves and cooling coil valves.

I. Typical valve body/actuator control actions shall be as follows:

1. Heating coil valves (non-vivarium) shall be normally open to flow through the coil.
2. Heating coil valves (vivarium) shall be normally closed to flow through the coil.
3. Heat exchanger valves (steam or water) shall be normally open to flow through the heat exchanger.
4. Cooling coil valves shall be normally closed to flow through the coil.
5. Humidifier valves shall be normally closed to flow through the humidifier.
6. Condenser water valves shall be normally open to flow through the cooling tower.
7. Isolation valves shall be normally open.
8. Drain valves shall be normally closed.

J. Approved Manufacturers:

1. All control valves except butterfly type:
   a. Siemens
   b. Honeywell
   c. Johnson Controls
   d. Belimo (Ball Style Control Valve & Actuator only)
2. High performance butterfly valves:
   a. Jamesbury - 815L
   b. Watts - QF series X
   c. Dezurik – BHP
   d. Grinnell – WINN
   e. Xomox Pliaseal
   f. Bray – Braylok Series 41

CONTROL DAMPERS SHALL BE SCHEDULED ON THE DRAWINGS. INDICATE THE DAMPER STATIC PRESSURE AND VELOCITY RATING IN THE SCHEDULE.

2.10 AUTOMATIC CONTROL DAMPERS

A. Multi-blade type. Provide with parallel blades for two-position, throttling, and modulating service unless noted otherwise. Provide required drive axles, linkage, jackshafts, and accessories for proper damper operation. Damper blades, frames, linkages, jackshafts and other parts of the damper actuation system shall not distort or rack during operation. Dampers shall close tightly, and operate in a smooth, hesitation and slack-free manner over the entire range of travel, at the maximum air pressure and velocity at the mounting location. Additionally, multiple section dampers shall operate in unison section-to-section.

B. Face and bypass dampers shall each be capable of passing 100% of unit rated CFM. Pressure drops shall be approximately the same in either extreme position, including the pressure drops of coils and bypass components.

C. All automatic control dampers shall conform to these specifications, including those provided by equipment manufacturers.

D. All control dampers shall be low leakage type and shall meet the following minimum requirements:

1. Leakage: 6.0 CFM/sq. ft. max. at 3" WC.
2. Frames: 13 gauge (minimum) galvanized steel, minimum 2 inches in frame depth, welded or riveted with corner reinforcement.
3. Blades: 16 gauge (minimum) galvanized steel or aluminum airfoil type, maximum blade size 8 inches wide, 48 inches long. Axles and axle extensions shall be minimum 1/2 inch solid galvanized steel. Dampers which are required to have a static pressure rating over 4" WC shall have minimum 3/4 inch solid galvanized steel axles/axle extensions.
4. Blade Seals: Synthetic elastomeric or neoprene, inflatable type, mechanically attached, field replaceable.
5. Jackshafts: Provide to drive adjacent vertical sections of multiple damper assemblies to ensure uniform operation. Minimum 3/4 inch solid or 1" hollow (minimum 1/8 inch wall thickness) galvanized steel. Where jackshafts penetrate air handling casing walls, provide greasable ball bearing supports sleeved and sealed to prevent casing leakage. Provide intermediate greasable ball bearing supports bolted to damper frames for jack shafts extending across multiple damper sections.
6. Jamb Seals: Stainless steel.
7. Bearings: Oil impregnated sintered bronze or lubricant free, solid stainless steel. Provide thrust washers at bearings for all dampers that are to be mounted with blades in the vertical position.
8. Linkages: Deflection and slack-free. Zinc plated, fully exposed, connected to blade faces (located in the air stream). Linkages may be located in-jamb for single damper flange mounting arrangements, provided linkage is external to the duct and easily accessible for maintenance.
9. Static pressure Rating: As scheduled on the drawings, or provide dampers rated for the maximum pressure to be encountered at the mounting location but not less than 4" WC.
10. Velocity Rating: As scheduled on drawings, or provide dampers rated for the maximum velocity to be encountered at the mounting location.

11. Temperature Limits: -40 to 200 deg. F.
12. Provide through-bolted connections for connecting axle or jackshaft extensions. Set screw arrangements are not allowed.
13. Selection and sizing criteria: Damper selection and sizing shall be based on damper schedule shown on the drawings. For dampers that are not scheduled on the drawings, selection and sizing shall be based on the procedure contained in Engineering Manual of Automatic Control, Honeywell, Inc., 1988.

E. For dampers located in stainless steel ductwork, PVC coated ductwork, fume hood exhaust ductwork, and exhaust fan outside air bleed-in ductwork, fabricate and size as indicated above, with the following additional requirements:

1. Frames, blades, blade axles and extensions, blade seals, jackshafts, linkages, and all other components exposed to the airstream: Type 316 stainless steel.
2. Bearings: Solid stainless steel.
3. Damper operators shall be mounted outside of air stream. Extend damper axles and jackshafts to permit mounting outside of air stream.

F. Approved Manufacturers:

1. Honeywell
2. Ruskin
3. Vent Products
4. American Warming & Ventilating
5. Arrow United Industries
6. White Environmental
7. Johnson Controls

2.11 DAMPER OPERATORS

A. General:

1. With the exception of air terminal units, operators shall be pneumatic unless specifically noted otherwise on the drawings.
2. Provide smooth, proportional control with sufficient power for air velocities 20% greater than maximum design velocity and to provide tight seal against maximum system pressures. Provide spring return to normal position. Damper operators shall be installed in accessible locations. Damper operators shall not be installed inside ducts or air units that convey hazardous exhaust.

B. Pneumatic Operators: Rolling diaphragm piston type with 8-13# spring range, as indicated on drawings, or as required to achieve specified performance.

C. Electric Operators: Maintenance free electric actuator, reversible, with push rod and bracket for swivel mounting and for the transmission of power. Synchronous motor with load independent running time providing parallel operation of several operators. Gear train with low noise level. Magnetic hysteresis coupling with magnetic transmission of torque, with no mechanical contact between the coupling members. The actuator shall be safe against blocking and overload proof even when operated continuously.

D. Electronic Operators: Maintenance free, 24 or 120 VAC, 4-20 mA or 0-10 VDC input, reversible, direct-drive or push rod and bracket, metal or aluminum housing, brushless DC motor with stall protection, quiet, low-power operation, have visual position indicator, and manual override.

E. Electronic damper operators used with air terminal unit controllers shall be 24 VAC 3-position floating control type and utilize a 90-degree rotation. Operators shall be direct-drive, have sufficient power to operate the damper against system pressures, provide visual position indication, have manual override, and shall be UL-listed for plenum installations. Operators shall be of the fail-in-place type.

F. Provide operator mounting brackets. Provide devices to connect operator drive shafts to dampers, damper linkages, and jackshafts.

G. Quantity of operators: Provide a sufficient number to achieve unrestricted movement throughout damper range, such that one operator does not operate more than the maximum square footage of damper area as recommended in standard catalog of manufacturer. Provide sufficient number so dampers close tightly, operate in a smooth, hesitation and slack-free manner over the entire range of travel at the maximum air pressure and velocity at the mounting location, and so that multiple section dampers operate in unison section-to-section.

H. Approved Manufacturers:

1. Honeywell
2. Johnson
3. Siemens
4. Belimo

2.12 PNEUMATIC COMPONENTS

A. Components shall be Honeywell, Johnson, or Siemens, unless listed otherwise.

B. Electric-pneumatic relays shall be two-position, have a metallic body, can be field or panel mounted, have a 120 VAC coil, and 3 or 4 ports. Only Johnson E.P. relays are acceptable.

C. Pressure-electric switches shall be two-position, appropriate range and element, suitable for the service, single or double pole, normally open or normally closed as required. Set point shall adjustable over the full range. Switch rating shall be 8.0 amps at 120 VAC, minimum.

D. Differential pressure transmitter shall be one-pipe, 3-15 psig output, capable of measuring pressure differentials of positive or negative type, operate on the force-balance principal, have an overpressure rating of 30" WC, accuracy of 5 percent full scale, and of the range suitable for the service.

E. Pneumatic room thermostats shall be direct acting, dual (minimum 5°F dead band – 2 output branch lines) or single setpoint, 2-pipe, large capacity, adjustable proportioning type, containing dual or single bi-metallic elements, adjustable differential, minimum setting no greater than 1-1/2 deg. F over a range of 55 to 85 deg. F. Provide tamperproof covers with exposed setpoint indicator in black lettering, exposed thermometer, exposed setpoint adjustment in non-public areas and key operated setpoint adjustment in public areas.

F. Pneumatic humidistats shall be of the adjustable proportioning, 2-pipe type, duct or wall mounted, reverse acting, adjustable sensitivity, sensitive hydroscopic membrane, temperature compensated, 20-90% RH range room, 25-65% RH range for duct, and 55-95% RH range for high-limit applications. Room type shall have tamperproof cover. Duct type shall come mounted inside a galvanized duct mounting box.

G. Temperature transmitters shall be one pipe, directly proportional output signal to measured variable, linearity within plus or minus 1/2% of range for 200 deg. F span and plus or minus 1% for 50 deg. F span, with appropriate 50, 100, 200 deg. F temperature range, compensated bulb, averaging capillary, rod and tube or room transmitter operating on 20 psig input pressure and 3 to 15 psig output. Room transmitter shall be provided with cover and wall plate.

H. Humidity transmitters shall be one pipe, directly proportional output signal to measured variable, linearity within plus or minus 1% of range, temperature compensated, sensitive hydroscopic membrane, room or duct mounted, operating on 20 psig input pressure and 3 to 15 psig output. Room transmitter shall be provided with cover and wall plate.

I. Receiver-controllers shall be single or dual input models direct or reverse acting with mechanical set point adjustment, calibrated proportional band adjustment, and calibrated authority adjustment. Provide proportional control mode for temperature control applications, and proportional plus integral control mode for differential pressure control applications. Proportional band shall extend from 2 to 40% of primary sensor span, authority from 0 to 200% of primary sensor span and integral time from 1/2 to 20 minutes. Suitable for input signal of associated transmitter and output signal required by controlled device.

J. Signal selector relays shall be capable of receiving two or more input signals and transmitting the highest or lowest pressure, with 1:1 input/output ratio.

K. Booster relays shall be proportional type for increasing the volume capacity of an input signal to a directly proportional output signal.

L. Pneumatic switching relays shall be snap acting, switching type with adjustable switching setpoint and fixed differential, single or double pole, and metallic body, for connecting a common port to either of two other ports based on the switching signal.

M. Pneumatic multi-purpose relays shall be two-valve design, high accuracy, high repeatability, metallic body, internal relief, high capacity, proportional, with adjustable set point, capable of being used as direct or reverse acting, amplifying, signal advancing, minimum pressure output, or lower pressure transfer. Removal of main air to the relay causes the branch line output to go to zero.

N. Pneumatic gradual position switches shall provide regulated pressure to a controlled device, with knob and pointer for manual adjustment, graduated scale plate with appropriate markings, suitable for surface or flush mounting on wall or panel as indicated.

O. Pneumatic selector switches shall be two or three position with metallic bodies, have indicating plates with appropriate markings, and suitable for panel or wall mounting. Switches installed in finished rooms shall be recessed in wall and provided with faceplate.

P. Field Mounted Gauges:

1. Provide 1-1/2" air pressure gauges on branch lines of pneumatic systems at controllers, transmitters, valve and damper operators, relays, switches, regulators; and DDC output points. Accuracy shall be 2.5 percent of full scale for the middle half of scale and 3.5 percent elsewhere. At dampers or devices that utilize multiple actuators, a single gauge in a readily visible location is acceptable.

Q. Panel Mounted Pneumatic Gauges:

1. All transmitters shall be provided with receiver gauges.
2. Door mounted analog indicator gauges shall be 3-1/2" diameter with 1% accuracy.
3. Sub-panel mounted analog indicator gauges shall be 2-1/2" diameter with 1% accuracy.
4. A 1-1/2" gauge shall be provided on the main air supply inside each control panel.

2.13 LOCAL, AUXILIARY, UPS AND LPI CONTROL PANELS

A. Unitized cabinet type for each system under automatic control with relays and controls mounted in cabinet and temperature indicators, pressure gauges, pilot lights, push buttons and switches flush on cabinet panel face, or as detailed on drawings.

B. Doors shall be removable, right or left hand hinged, locking, keyed alike and to other U-M control panels.

C. Removable perforated subpanel to permit mounting of controls without drilling holes.

D. Wall mounted or support kit or unistrut type frame for floor mounting.

E. Unit shall have knockouts, NEMA Type 1, and listed under UL508 Industrial Control Panel Enclosures.

F. LPI panel minimum size shall be 19-1/2" high by 16-3/8" wide by 5-3/4" deep.

G. UPS panel minimum size shall be 19-1/2" high by 20" wide by 10" deep. Confirm with UPS dimensions & clearances

2.14 AHU SAFETIES ENCLOSURES

A. Enclosures shall utilize a standard 4-11/16" x 4-11/16" square electrical box and blank clover. One half of the blank cover shall be painted red and the other blue. A red neon indicator light shall be installed in the red half of the cover and a blue neon indicator light shall be installed in the blue half of the cover. A terminal strip shall be installed inside the electrical box with two terminals in one half, labeled "H1" and "H2" (for HVAC use), and two additional terminals in the other half, labeled "F1" and "F2" (for fire alarm use). The red neon indicator shall be wired to the F terminals and the blue neon indicator to the H terminals.

2.15 ROOM DIFFERENTIAL PRESSURE MONITOR

A. Room pressure monitors/ controller shall be capable of measuring the differential pressure between the corridor and adjacent spaces at all locations shown on the prints. Each room shall have its own controller capable of stand-alone operation. Each monitor shall be capable of both visual and audible alarms.

B. Each monitor shall use direct pressure measurement utilizing industrial quality differential pressure transducer technology. Implied pressure measurement systems utilizing thermal hot wire or thermal mass air velocity measurement are not acceptable.

C. Room pressurization monitoring system shall consist of a differential pressure transducer, wall-mounted display, wall/ ceiling-pickups with stainless steel trim kits and tubing.

D. Supply voltage shall be 24V AC. Monitors shall be capable of wipe down cleaning.

E. Each monitor shall have the ability to zero and set up the transducer as well as configure the alarm delay from the local interface.

INCLUDE BELOW IF MONITOR WILL BE USED TO MONITOR (2) SEPARATE ROOMS, OTHERWISE DELETE.

F. Monitor shall be capable of monitoring up to (2) two separate rooms (i.e. Patient Room and Ante-Room) with separate room pressure readings for each.

INCLUDE BELOW PARAGRAPH "G" AND DELETE PARAGRAPH "H" IF MONITOR WILL BE USED IN C&W FACILITY, WHERE THE DESIRE IS TO MATCH EXISTING. OTHERWISE USE A COLOR TOUCHSCREEN MODEL DESCRIBED IN THE FOLLOWING PARAGRAH "H" (AND DELETE PARAGRAPH "G"). EDIT ACCEPTABLE MANUFACTUERS LISTING ACCORDINGLY.

G. Provide a surface mounted wall monitor with a LCD screen indicating room pressure (of primary patient room and secondary ante room if relevant) and mode (i.e., Normal Patient Room or Isolation/ Protective Environment Room). Monitor shall incorporate a 2-position key switch to allow user to set room to Patient Room (disables alarm) or Negative Pressure (or Positive Pressure- see drawings) (enables alarm). LED's on monitor shall give visual indication of status: green for normal and red for alarm.

H. Provide a monitor with a full color TFT/ QVGA touchscreen interface, min. size of 4" corner to corner, set to monitor room pressure(s). Monitors with color touchscreen displays shall be flush/ semi-flush mounted and user programmable. Home screen graphics shall indicate one of two room modes, non-pressurized "standard" patient room or pressurized mode (i.e. Isolation Room- Negative Pressure, Protective Environment Room- Positive Pressure) and respective room pressure(s) (for both patient room and ante room, where relevant). Display shall provide a change of color for visual indication of status: green for normal, orange for warning alarm (with notice on monitor to close door) and red for alarm. Monitor settings shall be accessed via password protected touch screen. Room/ monitor mode (i.e. Normal Patient Room or Isolation/ Protective Environment Room) shall be set by the user (clinician) thru touchscreen password access.

I. Monitor shall generate a local visual alarm upon loss of room pressure after a 10 minute alarm delay. Monitors used on patient rooms shall have their audible alarms silenced. Alarm criteria shall conform to the following:

Criteria	**Set points**	
	Green (Normal)	**Red (Alarm)**
Room Pressure	≥0.01"	<0.01"

J. DDC interface: Device shall be integrated to the BMS front-end via BACnet MS/TP to indicate an analog space pressure and monitor mode (Normal Patient Room or Isolation/ Protective Environment Room).

K. Monitors for Isolation Rooms and Protective Environment Rooms shall be provided with a separate remote mounted monitor panel, located at the respective nurse's station- see drawings. Remote panel shall be flush mounted LCD screen, set to monitor and alarm (visual only) multiple room pressure monitors. Panel shall be capable of indicating respective room's status (isolation/protective vs. normal patient room) and alarm.

L. Provide panel with Room Differential Pressure Transmitter, specified herein.

M. Approved Monitor Manufacturers (key switch models):

1. Siemens

N. Approved Monitor Manufacturers (color touchscreen models):

1. Critical Room Control (CRC-RPM)

2.16 ROOM DIFFERENTIAL PRESSURE TRANSMITTER

A. Provide room differential pressure transmitter and wall/ ceiling-shielded static air probes with trim kits and tubing.

B. Transducer accuracy shall be minimum ±0.4% full scale including the effects of linearity, hysteresis and repeatability. The transducer max change shall be ≤0.5% per year. Provide with bidirectional range of +/- 0.10 in wc. Each transducer shall be digitally compensated using an application specific integrated circuit (ASIC). The transducer shall have an integral LED power/status indicator. The room pressure transducer shall be factory calibrated with NIST traceable standards. Span and zero shall be individually adjustable.

C. Provide with aluminum or stainless steel flush mounted, shielded static air probes, complete with pressure impulse suppression chamber and airflow shielding. Probe shall be capable of sensing static pressure within 1% of actual pressure value while being subjected to airflow at 1,000 FPM. Air Monitor model "SAP".

D. Acceptable Room Differential Pressure Transmitter Manufacturers:

1. Ashcroft CXLdp

2.17 HUMAN MACHINE INTERFACE PANEL(HMI)- DDC PANEL

SPECIFICATION EDITOR: UMH DESIRES TO UTILIZE A LOCAL INTERFACE TO SIMPLY DISPLAY CRITICAL INFRASTRUCTURE POINTS (IE AHU DISCHARGE AIR TEMPERATURES, DIFFERENTIAL PRESSURE, SUPPLY & RETURN WATER TEMPERATURES, ETC) AT THE TEMPERATURE CONTROL PANEL TO PROVIDE A QUICK VISUAL ON THE STATUS OF A SYSTEM. OLDER INSTALLATIONS HAVE USED LOOP POWER INDICATORS IN COMBINATION WITH RTD SENSORS (SPECIFIED ELSEWHERE IN THIS SPEC). NEW INSTALLATIONS SHALL UTILIZE HUMAN MACHINE INTERFACE PANELS AS SPECIFIED BELOW.

A. The MSCC shall install a 7" TFT LCD industrial color touchscreen in the cover of the DDC control panel. The HMI shall be custom configured by the Systems Integrator to display controller status and critical system parameters (AHU discharge temperature, differential pressure, supply & return temperatures, etc) relevant to the equipment the DDC controller is controlling. Standard default view shall be a read only display.

B. HMI shall utilize BACnet MS/TP direct to DDC controller as well as IP thru the HITs network for management and configuration of the device.

C. HMI shall at a minimum satisfy BACnet Operator Device (OD) functionality as a local MS/TP device.

D. HMI shall be suitable for operation in un-conditioned equipment room (32°F-122°F, 30%-90%RH).

E. Approved Manufacturers:

1. Loytec LVIS-3ME7-G2 with mounting frame

2.18 HUMAN MACHINE INTERFACE PANEL (HMI)- OPERATING ROOMS, PROCEDURE ROOMS, CARDIAC CATH/ IR ROOMS (INFECTION CONTROL ROOM TYPES 1 THRU 3)

A. HMI shall consist of a semi-recessed, wall-mounted screen assembly and a remote mounted differential pressure transmitter and associated pressure pick-ups, tubing, etc. Panel shall be capable of wipe-down cleaning.

B. Wall-mounted panel shall consist of a full color LCD touchscreen interface, min. size of 7" corner to corner, set to monitor room pressure, room temperature (current state & setpoint), room humidity, room air change rate, door status and occupied/ unoccupied mode. Panel shall allow user to adjust space temperature only. Temperature adjustment shall not require password access. Display shall provide a change of color for visual indication of status: light blue for normal and red for alarm. Provide with BACnet MS/TP integration for interface with MCS.

C. MSCC shall configure HMI to generate a local visual alarm upon the following criteria (monitor shall have their local audible alarm silenced):

Criteria	**Set points**	
	Blue (Normal)	**Red (Alarm)**
Room Pressure (1)	≥0.01"	<0.01"
Room Air Change Rate	≥15AC's	<15AC's
Humidity	60%RH-20%RH	>60%RH or <20%RH
Temperature (2)	NA	
Occupancy Status (3)	NA	
Door Status (4)	NA	

(1) Time average room pressurization over 15 minutes.

(2) Temperature adjustment shall be limited to 62°F min- 80°F max.

(3) Occupancy status via confirmation from (2) occupancy sensors in room.

(4) A door status of "open", via door switch per below, shall initiate a visual banner on the HMI that states: "Door Status: Open". When door status is open and room pressure setpoint is below alarm setpoint, HMI shall provide a local pressurization alarm, however BMS room pressurization alarm shall be disabled.

D. All alarm set points shall be managed thru the DDC BMS. Local alarm set points in the HMI are not allowed.

E. Provide panel with Room Differential Pressure Transmitter specified under section 2.15.

F. Provide with door contact switch(es) for all doors into room. See construction documents for details. When not shown on construction documents, request clarification from project engineer.

1. Powered sliding doors shall utilize a relay in the door actuator as proof of door status, coordinate with door hardware.

2. Hinged doors shall utilize a concealed, hermetically sealed magnetic reed switch, field mounted in the top of the door frame and correspondingly in the top of the door. Contact housing color shall match door frame. Contacts shall be UL listed, GE Sentrol Industrial series or CRC Solutions door contact.

G. Approved Manufacturers (color touchscreen models):

1. Critical Room Control (CRC-MultiVIEW)

2.19 PNEUMATIC ACCESSORIES

THE UNIVERSITY'S HIGH PRESSURE AIR SUPPLY IS AVAILABLE ON CENTRAL CAMPUS VIA THE STEAM TUNNEL SYSTEM AND IS DELIVERED AT -50 DEG. F DEW POINT. THEREFORE CONTROLS USING THIS AIR SUPPLY SHOULD NOT NORMALLY REQUIRE REFRIGERATED OR DESICCANT AIR DRYERS, EVEN WHEN EXPOSED TO OUTDOOR AIR CONDITIONS.

A. Control Air Supply

1. Control air supply shall be from the University's high-pressure (steam tunnel) air supply or from a temperature control compressed air station as indicated on the project documents. System shall be sized for expected use, including air usage of laboratory airflow units or process control actuators (whether this equipment is provided by the MSCC or not), plus 10 percent extra capacity. When providing a control compressed air station, provide a Refrigerated Air Dryer if none of the pneumatic tubing or pneumatic components are exposed to outside air conditions. Provide a Regenerative Desiccant Air Dryer when pneumatic tubing or pneumatic components are exposed to outside air conditions. For projects utilizing the University's high pressure air supply, unless indicated otherwise on the drawings, no air dryers are required.

B. Compressed Air Station

1. Temperature control air compressors shall be reciprocating oil type through 25 HP, rotary screw over 25 HP, specifically designed for pneumatic controls, shall be of the simplex or duplex type, tank or base mounted unit assemblies, have combination intake filter/silencer, and totally enclosed belt guards. Compressors shall be sized based on no more than 1/3 run time with an appropriately sized tank and an average tank pressure of 70 psig for optimum performance. Simplex units shall only be used when backing up another control air supply.
2. Tank shall be of adequate size and contain a shut-off ball valve, ASME safety relief valve, pressure switch operated start/stop control, 120 VAC electronic automatic drain with manual bypass and air pressure gauge.
3. Duplex models shall be complete with NEMA 1 enclosure, starters, disconnects, automatic alternator, H-O-A switches (left H position spring return for test only), low oil shutdown switch, push-to-test pilot lights, and 3-position switch for selection of: compressor 1 only/automatic alternate/compressor 2 only operation. PRV/filter/dryer assemblies may be mounted to the compressor/tank assembly.

INCLUDE BELOW PARAGRAPH "4" FOR CRITICAL INSTALLATIONS REQUIRING COMPRESSED AIR REDUNDANCY WITHOUT CONNECTIONS TO THE UNIVERSITY'S HIGH PRESSURE AIR SUPPLY, OTHERWISE DELETE. EDIT ABOVE ACCORDINGLY

4. Provide (2) two fully redundant simplex or duplex air compressors, each sized for 100% of the total demand, per above requirements. Provide compressor alternating switch and associated piping and 120V power to automatically alternate lead compressor (similar to Ingersoll-Rand "Alternator Switch").
5. Approved Manufacturers:
   a. Quincy
   b. ACP
   c. Divilbis
   d. Ingersol-Rand

C. Tubing

1. Copper tubing shall be new hard drawn, air grade, ASTM B75 for 3/8 inch and smaller or type L, ASTM B68 for 1/2 inch and larger, with solder joint or compression type fittings, at the option of the MSCC.
2. Plastic tubing (all sizes) shall be black virgin, polyethylene, ASTM D1248, Type 1, Class C, Grade 5, meeting crack test performance required by ASTM D1693 and be fire retardant (FR) rated. Multi-tube harness material shall be as specified above with a polyester film barrier and vinyl jacket not less than 0.062 inches thick. All non-metallic tubing shall be 1/4" O.D. minimum; micro-sleeve is not acceptable.

D. Pressure Reducing Valves:

1. Pressure reducing valves (PRV) shall be diaphragm operated, self-relieving, designed to provide precision control of air supply pressures, and shall be located after any filters or dryers.
2. PRV shall be capable of being mounted in any position, shall have locking set point handle, and SS inlet strainer.
3. PRV shall have metal or plastic body and shall be provided with 2-1/2" gauge of appropriate units.
4. PRV's that are not self-relieving shall be provided with a separate relief valve of appropriate range.
5. Approved Manufacturers:
   a. Wilkerson
   b. Hankison
   c. Parker
   d. Van-Air
   e. Johnson
   f. Honeywell
   g. Siemens

E. DDC/Auxiliary/Local Control Panel Air Filters:

1. Provide an in-line air filter for main air supply to all DDC, auxiliary and local control panels capable of removing solids and petroleum-based oils.
2. Filter efficiency shall be 99.9% of 0.5 micron particles.
3. Filter element shall be visible and shall change color to indicate when to be replaced.
4. Minimum capacity shall be 500 SCIM and 30 psig.
5. Approved Manufacturers:

a. Wilkerson
b. Hankison
c. Parker
d. Van-Air

F. Coalescing Air Filters:

1. Provide a duplex set of coalescing air filters for the main air supply to all building temperature controls.
2. Duplex assembly shall include upstream and downstream pressure gauges and isolation ball valves for each filter.
3. Filter shall have a replaceable cartridge and drain port.
4. Filter shall be designed to remove oil and water droplets down to 0.01 microns and particulates down to 0.08 microns. Minimum capacity shall be 10 SCFM and 150 psig.
5. Coalescing filters shall be located downstream of refrigerated air dryers and upstream of chemical or desiccant dryers.
6. Approved Manufacturers:
   a. Wilkerson
   b. Hankison
   c. Parker
   d. Van-Air

G. Particulate Air Filters:

1. Whenever chemical or desiccant dryers are used, provide a duplex set of particulate air filters for the main air supply to all building temperature controls located downstream of chemical or desiccant dryers.
2. Duplex assembly shall include upstream and downstream pressure gauges and isolation ball valves for each filter.
3. Filter shall have a replaceable cartridge and drain port.
4. Filter shall be designed to remove particulates down to 0.1 microns. Minimum capacity shall be 10 SCFM and 150 psig.
5. Approved Manufacturers:
   a. Wilkerson
   b. Hankison
   c. Parker
   d. Van-Air

H. Refrigerated Air Dryers:

1. Provide a 120 VAC air-cooled refrigerated dryer capable of providing 35 deg. F dew point air.
2. Unit shall have power on light, high temperature light, valved air bypass piping, and air-to-air precooler/reheater.
3. Heat exchanger to be non-fouling, tube-in-tube, self-cleaning with smooth surfaces.
4. Compressor shall have hot gas bypass, as required, and shall be protected by thermal and current overloads.
5. Condenser fan shall have thermal overload protection.
6. Approved Manufacturers:
   a. Wilkerson
   b. Hankison
   c. Parker
   d. Van-Air

I. Regenerative Desiccant Air Dryers:

1. Provide a 120 VAC regenerative type desiccant dryer of the optimal size to ensure sufficient contact time and capable of providing –40 deg. F dew point air at 150 psig.
2. Units shall have an adjustable solid-state timer and purge flow economizer valve, on/off switch, power on light, separate fill and drain ports for ease of desiccant replacement without piping removal, heavy duty purge exhaust mufflers for quiet operation, non-lubricated air control valves, Teflon seated check valves, visible moisture indicator, visible purge flow indicator, pressure relief valve, ASME code constructed/stamped pressure vessels, SS support screens and air diffusers, tower pressure gauges, structural floor frame and stand for large sizes, wall mounting brackets and supports for small sizes, pre-piped and wired, and complete with air bypass piping.
3. Approved Manufacturers:
   a. Wilkerson
   b. Hankison
   c. Parker
   d. Van-Air

J. In-line Desiccant Air Dryers:

1. Provide an in-line desiccant dryer of the optimal size to ensure sufficient contact time and capable of providing 4,000 cubic feet of –40 deg. F dew point air at 150 psig with a dryer inlet temperature of 68 deg. F.
2. Units shall have a removable bowl or fill port for ease of desiccant replacement without piping removal, visible moisture indicator, and air bypass piping.
3. Not to be used as a substitute for Regenerative Desiccant Air Dryers when providing a control compressed air station.
4. Approved Manufacturers:
   a. Wilkinson
   b. Hankison
   c. Parker
   d. Van-Air

2.20 IDENTIFICATION AND LABELS

A. The MSCC shall provide black phenolic nameplates with engraved white minimum 1/4" high lettering, for each DDC or auxiliary panel, panel door mounted devices, and all LPI's, permanently attached, to identify field panel number, building, area, service, etc.

B. Labelling convention for DDC Panels shall follow that set forth under Field Device Identification, 3.6.E and shall include a list of systems controlled/ monitored/ alarmed by that field device. Examples of this include:

1. 0316-PNL1 services 0316-AHU-0202 and FCU-B2345
2. 0517-PNL2-IO1 services 4th Floor VAV boxes (indicates a remote I/O module off PNL2)

C. MSCC shall label panel power supply with power circuit and electrical panel information.

D. All control devices located within auxiliary panels shall be labeled with legible identification that corresponds with the as-built drawings via black permanent marker. Use plastic or metal tags when it is not possible to mark directly on the device.

E. Provide typed labels on all point terminals on DDC controllers, indicating point name and type.

F. All wiring and pneumatic tubing shall be suitably identified by thermal print labels at controller and input/output device.

PART 3 - EXECUTION

SPECIFICATION EDITOR: ONLY USE THE FOLLOWING PARAGRAPH FOR ADDITION & RENOVATION PROJECTS. REMOVE THE FOLLOWING PARAGRAPH FOR NEW, STAND-ALONE FACILITIES.

3.1 DEMOLITION

A. All existing control panels, devices, wiring and tubing that are to be abandoned as part of renovation work shall be demolished completely by the MSCC.

B. All demolished controllers or control devices that are still in working condition shall be returned to UMHHC's HVAC maintenance department.

C. Abandoned wiring shall be demolished back to the nearest connection point or junction box.

D. Abandoned pneumatic tubing shall be demolished back to the nearest main-line tap and shall be capped with a mechanical fitting.

E. The MSCC shall be responsible for completely removing and decommissioning all DDC control programming on UMH's Siemens, Honeywell, Johnson Controls, or ASI DDC systems that are from points/ devices/ controllers removed or modified under the scope of the MSCC's work. The MSCC's decommissioning work shall include updating the vendor's engineering database, located on UMH central servers, from devices removed under the MSCC's scope of work.

F. MSCC shall ensure that existing DDC panel communications are maintained after all demolition work.

3.2 INSTALLATION

A. Install all system components as recommended by the manufacturer, including air compressors, dryers, filters, etc.

B. Thermostats, room temperature sensors, push-buttons, and other adjustable devices meant for room occupant operation shall be mounted 44" to center above the finished floor. This requirement does not apply to control panels and devices mounted in penthouses, mechanical rooms, and other spaces normally inaccessible to room occupants.

C. Zone thermostatic controls used to control both heating and cooling, e.g. a variable volume terminal unit also controlling a reheat coil and/or fin tube radiation, shall be programmed (DDC systems) or set up (non-DDC systems) with a heating setpoint of 71°F and cooling setpoint of 76°F, and a dead-band of 5°F, unless indicated otherwise on the Drawings.

D. System I/O's shall not be split between different DDC panels.

E. AHU safeties enclosure shall be mounted at the wiring/tubing DDC panel array interface trough.

F. Install all conduit, wiring, cable, tubing and equipment in a first-class manner, using proper tools, equipment, hangers, and supports, and in locations as required for a neat, attractive installation. No material shall be exposed if it is possible to conceal it. Exposed materials shall be installed only with consent of the Owner. Conduit shall not be supported from work of other trades.

G. Support all sensors and devices as recommended by the manufacturer. Space sensors shall be mounted on an electrical box.

H. Provide a control air shut-off valve for each panel.

I. Panels and meter enclosures shall be rigidly mounted.

J. Plastic tubing may be used in all locations, except in mechanical rooms, shafts, or exposed locations, unless run in conduit.

K. Tubing shall not be attached to conduits with current carrying conductors or fire protection piping. It shall be adequately supported with no noticeable sagging between supports, and protected from abrasion and galvanic corrosion. All pneumatic tubing shall be concealed in finished areas.

L. A PRV shall be installed on each floor to provide control air supply.

M. All wiring to devices installed inside auxiliary/local panels shall enter/exist via terminal strips, except twisted/shielded sensor wiring.

N. Provide a pouch or other containing method inside each control panel and insert a copy of the corresponding system control drawings.

O. Provide supplemental Hand-Off-Auto switches and contactors, as required, to permit automatic operation of equipment from the DDC system (i.e. single phase equipment which uses fractional motor starters, etc.).

P. Extreme care shall be used in making connections to other equipment to see that the safeties on this equipment are not inadvertently bypassed or overridden by the DDC.

Q. All equipment having moving parts and controlled by the DDC shall be provided with warning labels no less than 2 in. in height, and in bright warning color, stating that the equipment is remotely started by automatic controls. Such labels shall be posted clearly in the area of any moving parts, such as belts, fans, pumps, etc. The University of Michigan will furnish and install these warning labels.

R. Ensure all dampers, valves, thermowells, flow meters, and other miscellaneous control components are located and installed correctly so that the specified and intended performance and the Sequence of Operation is achieved, including components supplied and installed by others.

S. Limit switches used on dampers shall be set at approximately 95% of full stroke (opened and closed). Where a single limit switch is indicated, set at approximately 75% of full stroke.

T. MSCC shall provide all necessary equipment, test gases, etc. for calibration, and shall calibrate all sensors (i.e. CO2, CO, combustible gas, etc.) in accordance with the manufacturer's recommendations. Specialized equipment, test gases, etc. shall be turned over to owner upon completion and acceptance.

U. Flow meters shall be installed with at least 10 diameter of straight pipe length upstream and five diameter of straight pipe length downstream. Power supply to flow meters and BTU meters shall be 115 VAC from the auxiliary DDC panel, and power connection for each device shall be installed with a lockable local service disconnect. Flow meter transmitters/ displays and BTU meters, shall be mounted 4 feet above finished floor and shall be located at the DDC panel array unless the maximum available cable length is exceeded. All meter components, including sensors, shall be mounted in accessible locations.

V. Airflow sensors shall be installed with the appropriate upstream and downstream clearances per manufacturer's instructions.

W. Remove any unused items that are part of renovations or demolition, including, but not limited to: conduit, wire, tubing, controllers, controlled devices, relays, enclosures, etc. Do not abandon in place.

X. DDC sensor cabling shall not be spliced.

Y. DDC Wiring shall be terminated at DDC sensors, relays, transducers, switches and control panels. Intermediate stops or terminations at any other terminal strips are not acceptable.

Z. Locate all control components and accessories such that they are easily accessible for adjustment, service and replacement.

AA. Participate in the commissioning process in accordance with the project commissioning documents.

BB. For fan coil controllers and similar programmable electronic controllers, obtain approval of programmable settings from the Engineer and Commissioning Authority prior to programming. Revise settings as required during commissioning.

CC. Install constant flow fume hood sash position sensors and sash travel limit brackets in a neat and workmanlike manner. Install cables and wires in a manner which avoids contact by the user during normal use, and allows vertical sashes to be positioned without binding, twisting or tangling.

DD. Devices and wiring installations within panels shall be neat and concise.

1. All wire and pneumatic tubing within the controls enclosure shall be neat and suitably bundled and contained in "Panduit" wire duct, or equivalent, parallel and/or perpendicular with enclosure. Free-hanging, loose installations are not acceptable.
2. All panels, enclosures, sub-panels, junction boxes, pull boxes, troughs, trays, etc. shall not exceed 70% maximum conductor fill.
3. Each input/output device shall be controlled from a dedicated 2-pair conductor.
4. Each input/output device requiring power shall have a dedicated power wire run to the control enclosure and shall be terminated to a dedicated terminal strip.

EE. Except as specified otherwise, throttling ranges, proportional bands, and switching differentials shall be centered on the associated set point.

FF. All set points, unless otherwise indicated, are adjustable and shall be programmable for all control loops.

GG. Where any sequence or occupancy schedule calls for more than one motorized unit to start simultaneously, the system start commands shall be staggered by 60-second (adj.) intervals to minimize inrush current.

HH. Optimal start/stop programs shall be applied to all regularly scheduled mechanical and electrical systems.

II. Configure modular DDC panel terminations such that analog inputs and analog outputs terminate on separate modules, do not intermix analog outputs and inputs on the same module.

JJ. Provide temporary programming to provide building heating or cooling during construction.

KK. Programming lines shall be grouped into subparts and explained with comment fields. The comment fields shall include the related part of the project sequence of operation that each program subpart is intended to accomplish.

LL. MSCC shall be responsible for adding all DDC devices, logic, project files, etc. in the project scope of work to the UMHHC managed vendor specific engineering software to allow UMHHC to fully manage system code/logic, network settings, definitions, parameters, etc.

SPEC WRITER NOTES: FUME HOOD MONITORS ARE TYPICALLY NOT PROVIDED BY THE MSCC ON UMH PROJECTS, BUT ARE RATHER PROVIDED WITH THE FUME HOOD. FOR RARE OCCASIONS WHERE THE MSCC WILL PROVIDE THE FUME HOOD MONITOR, CHANGE THE FOLLOWING PARAGRAPH FROM HIDDEN TEXT.

MM. Install constant flow fume hood monitors surface mounted on the front of the fume hood. Furnish exact dimensions and location to the fume hood factory to allow for concealed wiring to the monitor.

3.3 ROOM DIFFERNTIAL PRESSURE MONITOR

A. MSCC shall provide Room Differential Pressure Monitors for the following room types, or as shown on contract documents:

a. Airborne Infection Isolation Room
b. Protective Environment Rooms

c. Pharmacies
d. Labs
e. Central Sterile Processing/ Instrument Processing
f. Autopsy Rooms

B. MSCC shall integrate monitor to the BMS. MSCC shall power monitors from an emergency power source, as shown on contract documents.

C. Flush-mount monitor adjacent to the door into each space, in the corridor wall. For rooms with an anteroom, mount monitor in corridor wall, outside anteroom.

3.4 ROOM DIFFERENTIAL PRESSURE TRANSMITTER INSTALLATIONS

A. Transmitters provided with Room Differential Pressure Monitors shall be mounted in a wall mounted panel enclosure above the ceiling on the corridor side of the door into the space. Confirm mounting location with project engineer.

B. Standalone transmitters (without monitor) shall be remotely mounted within a panel enclosure next to the terminal VAV box serving the space. Label pickup tubing connections at transducer with reference point locations (ie "From Corridor B1G405Z"). Confirm mounting location with project engineer.

3.5 UNINTERRUPTABLE POWER SUPPLIES (UPS) INSTALLATIONS

SPECIFICATION EDITOR: THE AE SHALL CLEARLY INDICATE ON CD'S WHERE LOCAL UPS'S ARE REQUIRED TO POWER DDC PANELS. IN GENERAL, UPS'S SHOULD BE PROVIDED FOR ALL CONTROLLERS, TO PROTECT AGAINST DAMAGE DUE TO POWER QUALITY AND TO MINIMIZE DISRUPTION. THE EXCEPTIONS ARE CONTROLLERS SERVING NON-CRITICAL INFRASTRUCTURE IN OUTPATIENT FACILITIES OR MEDICAL OFFICE BUILDINGS.

A. Provide local UPS per section 2.5 for all DDC panel installations.

B. Rigidly mount and anchor UPS to wall, either in ventilated panel enclosure or on wall brackets, per specification section 2.5. Do not mount UPS on floor.

C. Connect HITS provided patch cable at UPS and configure network communication card to facilitate communication and SNMP integration to the Desigo frontend.

3.6 LOCAL HUMAN MACHINE INTERFACE PANEL(HMI)- DDC PANEL-INSTALLATIONS

SPECIFICATION EDITOR: THE AE SHALL EDIT BELOW AND CLEARLY INDICATE ON CD'S WHERE LOCAL DDC PANEL HMI'S ARE REQUIRED. IN GENERAL, DDC HMI'S SHOULD BE PROVIDED FOR ALL CONTROLLERS SERVING THE EQUIPMENT IDENTIFIED BELOW IN ALL INPATIENT FACILITIES AND AMBULATORY SURGERY CENTERS. INSTALLATIONS WITHIN OUTPATIENT BUILDINGS OR MEDICAL OFFICE BUILDINGS TYPICALLY DO NOT WARRANT THE NEED FOR DDC PANEL HMI'S.

A. Provide local HMI in all DDC panels, per section 2.18, serving the following type of equipment, and/ or as indicated on contract documents:

1. Air handling units
2. Chiller Plants
3. Heating Plants

B. HMI-DDC shall be provided with a network connection to the HITs network as well as a connection to the local DDC controller.

C. MSCC shall be responsible for providing and installing the HMI-DDC, including all required power, communication and associated raceway. MSCC shall validate proper IP & MS/TP communication to HMI.

D. Systems Integrator (SI) shall be responsible for the configuration and generation of graphics on the HMI-DDC.

3.7 BACNET OBJECT / CONTROL POINT NAMING

A. The contractor shall use the BMS point naming convention outlined below. In instances where character restrictions prohibit use of this convention, or for other unique systems not covered below, contact Colin Murphy in Systems Monitoring for direction (ctmurphy@med.umich.edu).

B. The contractor shall provide a submittal for owner review and approval for the specific point naming convention proposed on the project. This shall be included in the BMS Temperature Controls submittal.

C. All control points shall include three sections with decimal point separation: 4 digit UM Building number, system identification, point description identification. See the example below:

1. 0316.AHU22.DAT = Discharge Air Temperature on air handler AHU-22 in the University Hospital Building (ID #0316).

D. UM Building Number

Obtain the 4 digit UM building number from UMHHC Systems Monitoring.

E. Field Device Identification

1. All field device identification shall include three sections with decimal point separation: 4 digit UM Building number, device identification and sequential number, and room where device is located. See the example below:
   a. 0316.PNL1.3000M = DDC Panel #1 in room 3000M in the University Hospital Building (ID #0316).
2. Device abbreviations shall conform to the following:
   a. FCU = Terminal fan coil unit controller
   b. HMI = Human Machine Interface Panel
   c. MON = Terminal controller with monitoring points only
   d. PNL = DDC Panel (Controller)
   e. RTR = Router (BACnet IP)
   f. UPS = Uninterruptable Power Supply
   g. VAV = Terminal VAV box controller
   h. PM = General Power Meter
   i. PQ = Power Quality Meter
   j. ATS = Automatic Transfer Switch
   k. STS = Static Transfer Switch
   l. GW = Gateway

F. System Identification

1. The point system identification shall associate a point with the system it is directly related to. A system shall be an air handling unit, a heating system, a chilled water system, a VAV box, etc.

2. System and equipment designations shall match those set forth on the equipment schedules in the project documents. When not clearly defined, systems shall be abbreviated in the point name as follows:
   a. AHU = Air Handling Unit
   b. CHW = Chilled Water and Primary Chilled Water Loop
   c. CRAC = Computer Room Air Conditioning unit
   d. CW = Condenser Water
   e. DHW = Domestic Hot Water
   f. FCU = Fan Coil Unit
   g. HHW = Heating Hot Water
   h. PCHW = Process Chilled Water
   i. RTU = Rooftop Unit
   j. SCHW = Secondary Chilled Water
   k. TCHW = Tertiary Chilled Water
   l. UH = Unit Heater
   m. VAV = Variable or Constant Air Volume Box
3. If the system is one of multiple common systems in a building (AHU's, etc.), the System Identification shall include the system identifier. See the examples below:
   a. AHU01 = Air Handling Unit AHU-1
   b. AHUH52 = Air Handling Unit AHU-H5-2
   c. AHUOA1 = Outside Air Handling Unit AHU-OA-1
4. Terminal equipment, such as VAV boxes or fan coil units, shall include the room number of the space served in the System Identification. If the equipment serves multiple rooms, the primary room or room including the thermostat shall be used for this identification. For areas such as operating rooms, where the room ID would be more commonly used than the actual room number, the ID shall be used (ie. OR-5 instead of 1C204). Terminal equipment served by central equipment shall include the central equipment ID as a prefix to the System abbreviation. See the examples below:
   a. 12VAVB2C205 = VAV box serving room #B2C205 with ventilation supplied by AHU-12
   b. HS01VAVOR5 = VAV box serving operating room OR-5 with ventilation supplied by AHU-HS-01

G. Point Description Identification

1. The point description identification shall identify the specific point and its function in the system. A Point Description shall identify and describe the field or virtual device, sensor, setpoint, mode, etc. It is understood and accepted that many terminal equipment controllers for VAVs, etc., will include pre-programmed Point Descriptions that do not match the identifications below.
2. Descriptions shall be abbreviated in the point name as follows:
   a. BPV = Bypass Valve
   b. BTU = Energy Units Btu
   c. BTUH = Energy Rate Units Btu/hour
   d. CCT = Cooling Coil Leaving Air Temperature
   e. CCV = Cooling Coil Control Valve
   f. CFM = Air Volume Flowrate
   g. CH# = Chiller (ie. CH-1 is "CH1")
   h. CO2 = Carbon Dioxide
   i. CT# = Cooling Tower (ie. CT-1 is "CT1")
   j. CT#VFD = Cooling Tower VFD (ie. CT-1 VFD is "CT1VFD")

k. DAPRS = Discharge Air Static Pressure
l. DARH = Discharge Air Relative Humidity
m. DAT = Discharge Air Temperature
n. DECGPM = Decoupler Liquid Volume Flowrate
o. DIFCFM = Air Volume Flowrate Differential
p. DP = Differential Pressure
q. EAT = Exhaust Air Temperature
r. EODPRS = End of Duct Static Pressure
s. FLT = Filter Differential Pressure
t. FPM = Speed in Feet Per Minute
u. FRZ = Freezestat
v. GPM = Liquid Volume Flowrate
w. HCV = Heating Coil Control Valve
x. HUV = Humidifier Control Valve
y. HX# = Heat Exchanger (ie. HX-1 is "HX1")
z. KW = Kilowatt
aa. KWH = Kilowatt Hour
bb. LVL = Level
cc. MAD = Mixed Air Dampers
dd. MAT = Mixed Air Temperature
ee. OACFM = Outside Air Volume Flowrate
ff. OAE = Outside Air Enthalpy
gg. OARH = Outside Air Relative Humidity
hh. OAT = Outside Air Temperature
ii. OAW = Outside Air Humidity Ratio
jj. OCC = Occupied Mode
kk. OS = Occupancy Sensor
ll. P# = Pump (ie. P-12 is "P12")
mm. P#VFD = Pump VFD (ie. P-12 VFD is "P12VFD")
nn. PHT = Preheat Coil Leaving Air Temperature
oo. PRS = Static Pressure
pp. RACFM = Return Air Volume Flowrate
qq. RAE = Return Air Enthalpy
rr. RAFVFD = Return Air Fan VFD
ss. RAF = Return Air Fan
tt. RARH = Return Air Relative Humidity
uu. RAT = Return Air Temperature
vv. RAW = Return Air Humidity Ratio
ww. RETT = Return Temperature (water)
xx. RLA = % Rated Load Amps
yy. RMT = Room Temperature
zz. SACFM = Supply Air Volume Flowrate
aaa. SAFVFD = Supply Air Fan VFD
bbb. SAF = Supply Air Fan
ccc. SCV = Steam Control Valve
ddd. SUPT = Supply Temperature (water)
eee. TON = Cooling Load Tons
fff. UNOC = Unoccupied Mode
ggg. V# = Isolation/2-Position Valve (ie. V-12 is "V12")
hhh. VIBSW = Vibration Switch
iii. VLT = Voltage

3. Point description shall include an underscore and additional tag for extra description such as setpoint, alarm, etc. Description add-ons shall be abbreviated in the point name as follows:
a. _ALM = Alarm
b. _CMD = Command

c. _HLSP = High Limit Setpoint
d. _LLSP = Low Limit Setpoint
e. _SP = Setpoint
f. _STS = Status

H. See below for several examples of implementation of this point naming convention:

1. 0301.AHUC4.DAT_SP = Discharge air temperature setpoint for AHU-C4 in the Cancer Center.
2. 0316.AHU18.SAF_STS = Status of supply fan in AHU-18 in the University Hospital Building.
3. 5109.CHW.CH1SUPT = Chilled water supply temperature from Chiller CH-1 in the Cardiovascular Center.
4. 5109.CHW.SUPT = Main primary chilled water loop supply temperature.
5. 5109.SCHW.SUPT = Secondary loop chilled water supply temperature in the Cardiovascular Center.
6. 5173.HHW.HX1SCV = Steam control valve on heat exchanger HX-1 in the Heating Hot Water plant in the Children's & Women's Hospital.
7. 5173.SCHW.DP_SP = Secondary chilled water loop differential pressure setpoint in the Children's & Women's Hospital.
8. 5173.C9VAV9938.*"sub-points"* = Terminal DDC controller for a VAV box with a thermostat in room 9-938, served by Air Handling Unit AHU-C9 in the Children's & Women's Hospital. Terminal controller pre-programmed sub-points then follow in the Point Description Identification section.

3.8 TRENDING AND ALARMING

A. All system trending, equipment schedules, and point alarm definitions shall be configured by the SI in coordination with Systems Monitoring and UMHHC standards.

B. For all equipment where the MSCC has provided a command and status (ie fan, pump, valve with endswitch, etc), the MSCC shall program and broadcast a virtual point for alarming. Whenever the "enable" command does not match the status point, the virtual binary alarm point must change from normal to alarm.

C. For every indicated or implied setpoint, MSCC shall create a variation from setpoint alarm. Examples include air handler discharge temperature, chilled water temperature, end-of-line DP, etc.

1. MSCC shall disable variation from setpoint alarms when the associated equipment is not in use, i.e., disable discharge temperature alarm when the air handler is in unoccupied mode.

D. Unless specifically indicated, alarms are not required for air terminal unit controllers (VAV's, etc) controlling space temperature.

3.9 CONTROLLER ADDRESSING

A. Connection of new BACnet IP routers and B-BC Controllers to the HITS network shall be closely coordinated with HITS and the SI.

B. The MSCC shall obtain IP addresses for new devices and the necessary IP addresses of other BACnet IP devices (for the BACnet Broadcast Distribution Table) from the HITS group thru Systems Monitoring.

C. The MSCC shall obtain the BACnet Device Instance, Network numbers and MS/TP MAC address from the Systems Monitoring group.

D. The MSCC shall deliver a list of Device Instance Numbers and Network Numbers to the UMHHC Systems Monitoring group at the close of each project.

E. The MSCC shall begin Device Instance Numbers where they were left off on the last installation that the MSCC performed so that Device Instance Numbers are never duplicated. MSCC shall verify the next available Device Instance Number with UMHHC Systems Monitoring group prior to installation.

3.10 NETWORK CONNECTIONS

SPECIFICATION EDITOR: THE AE SHALL CLEARLY SHOW ON PROJECT CD'S WHERE HITS NETWORK CONNECTIONS/ JACKS ARE REQUIRED. LOCATIONS ON CD'S ARE REQUIRED SO AS TO COORDINATE HITS NETWORK REQUIREMENTS OF PROJECT.

A. New MCS installations shall communicate with the existing Siemens Desigo CC servers over the HITS layer 3 network via BACnet IP communication. The following device types shall be provided with HITs network connections:

1. DDC Controllers communicating BACnet IP (B-BC's and some B-AAC's)
2. UPS's
3. HMI-DDC
4. Routers (MS/TP to IP)
5. Utility Meters

B. The MSCC shall provide a single BACnet Broadcast Management Device (BBMD) per IP sub-net to properly broadcast a BACnet Distribution Table reflecting all BACnet devices connected to the BACnet network. This is required to permit streamlined and efficient integration with the BMS B-AWS. MSCC shall contact Systems Monitoring to determine if an existing BBMD is present or if new is required.

C. Devices connected to the HITS network must meet HITS minimum security requirements. The HITS group may request to perform a security scan on network devices at their discretion. Submit network devices and all relevant information to the HITS group upon request.

1. The MSCC shall remediate all critical, high and medium security vulnerabilities identified by the HITS security scan.

D. The MSCC shall obtain IP addresses for new devices and the necessary IP addresses of other BACnet IP devices (for the BACnet Broadcast Distribution Table) from the HITS group thru Systems Monitoring.

E. MSCC shall provide a 1" conduit from the DDC panel to the cable tray for network connectivity (cabling by HITS). In facilities where a cable tray system is not provided, the MSCC shall provide a 1" conduit raceway to the nearest Telecommunication Room. Coordinate routing with HITS thru Project Manager. HITS shall provide all network patch cables and biscuit jack inside the MCS enclosure; MSCC shall be responsible for connecting all patch cables at respective IP devices and establishing communication.

3.11 COORDINATION WITH SYSTEMS INTEGRATOR

A. The MSCC shall provide all necessary coordination with the Systems Integrator (SI) to achieve an operational front-end user interface for the project.

B. Provide all device PICS, a list of BACnet objects, approved submittals, as-built documents and all other relevant information to the SI before construction and at substantial completion as described in 1.9 "Submittals".

C. Coordinate with SI as necessary to ensure that all system alarms that are generated by the DDC Controllers are communicated to the central BMS server(s) properly.

SPECIFICATION EDITOR: THE NUMBER OF REQUIRED COORDINATION MEETINGS DURING CONSTRUCTION AND COMMISSIONING WILL DEPEND UPON THE SIZE AND COMPLEXITY OF THE PROJECT. (2) ONE HOUR MEETINGS, DURING CONSTRUCTION & POST-CONSTRUCTION, IS THE MINIMUM; ADJUST UP BASED ON PROJECT SIZE & COMPLEXITY. COORDINATE WITH THE UMHHC FPD DESIGN MANAGER.

D. The MSCC shall be required to coordinate and attend:

1. A (1) hour coordination meeting with the SI during construction. Meeting shall occur a minimum 2 weeks prior to releasing any points up to the Desigo CC front end and/or a minimum of 4 weeks prior to the scheduled substantial completion date.
2. A (1) hour coordination meeting with the SI after construction, during system commissioning.
3. All meeting requests shall be coordinated through the owner's project manager.

3.12 CALIBRATION AND START-UP

A. The MSCC will start-up the DDC panels and provide calibration and start-up for temperature control devices and systems, including compressors, dryers, etc.

B. After control components have been installed and connected, test, adjust and re-adjust as required all control components in terms of function, design, systems balance and performance. Control devices, linkages and other control components shall be calibrated and adjusted for stable and accurate operation in accordance with the design intent and to obtain optimum performance from the equipment controlled. MSCC shall utilize NIST calibrated devices for all device calibration/ verification. All control valves shall be stroked and spring ranges verified and set. All dampers shall be stroked to verify proper and smooth operation. Cause every device to automatically operate as intended to ensure its proper functionality. Make systems ready for acceptance tests.

C. Perform point-to-point verification for all control inputs and outputs to confirm that all hardwire points are terminated properly, ranges are calibrated and I/O's are functioning. MSCC shall schedule a verification exercise with the Systems Integrator for this exercise. Verification shall involve validating proper performance from device (i.e. sensor) to BMS graphic.

D. Work with the SI to confirm that all control inputs and outputs are reporting properly to the BMS server(s) and that Systems Monitoring personnel are able to override all system outputs.

E. After equipment has been accepted and operated in normal service for two weeks, check the adjustment of control components and recalibrate/replace where required.

SPEC WRITER NOTES: FUME HOOD MONITORS ARE TYPICALLY NOT PROVIDED BY THE MSCC ON UMH PROJECTS, BUT ARE RATHER PROVIDED WITH THE FUME HOOD. FOR RARE OCCASIONS WHERE THE MSCC WILL PROVIDE THE FUME HOOD MONITOR, CHANGE THE FOLLOWING PARAGRAPH FROM HIDDEN TEXT.

F. Set constant flow fume hood monitor alarms as follows:

1. Insufficient differential static pressure/air volume:
   a. Face velocity 80 FPM (standard hoods) or 60 FPM (Reduced Face Velocity Hoods.
2. Sash above the sash stop position.
   a. Time delay to re-alarm after silence button pushed: 10 minutes.
   b. Alarm shall clear when sash returned to sash stop position or lower.
   c. Floor mounted hoods: Alarm shall activate when any sash is above its sash stop position; time delay and alarm clear shall be same as above.

3.13 ACCEPTANCE PROCEDURE

A. Upon successful completion of start-up and recalibration as indicated in this section, commission all mechanical controls provided. Provide a detailed list of every control point installed to the project Commissioning Authority (CxA), and verify proper operation of each component prior to commissioning the controls with the CxA. Include, in checklist format, a detailed procedure to verify all aspects of the controls' Sequence of Operation.

B. Demonstrate, with the assistance of the Systems Integrator, operation of all control systems, including each individual component, to the University's Commissioning Agent.

C. Validate that all security vulnerabilities identified by the HITS security scan have been remediated.

D. After correcting all items appearing on the punch list, make a second written request to the University's Commissioning Agent for inspection and approval.

E. After all items on the punch list are corrected and formal approval of the control systems is provided by the Architect/Engineer, the MSCC shall indicate to UMHHC in writing the commencement of the warranty period.

3.14 OWNER INSTRUCTION AND TRAINING

SPECIFICATION EDITOR: THE REQUIRED AMOUNT OF TRAINING WILL DEPEND UPON THE SIZE AND COMPLEXITY OF THE PROJECT. FOR SMALLER, SIMPLER PROJECTS UMHHC MAY REQUIRE ONLY A LIMITED AMOUNT OF TRAINING (IE 8 HOURS) OR NO TRAINING AT ALL. FOR LARGER PROJECTS WITH COMPLEX SYSTEMS, UMHHC MAY REQUIRE SIGNIFICANT TRAINING HOURS (MIN 24 HOURS OF COMBINED ON-SITE &

CLASSROOM INSTRUCTION) FOR BOTH MAINTENANCE AND SYSTEMS MONITORING PERSONNEL. TRAINING MAY ALSO NEED TO TAKE PLACE IN SEPARATE SESSIONS FOR DIFFERENT SHIFTS OF PERSONNEL. COORDINATE REQUIREMENTS WITH THE UMHHC FPD DESIGN MANAGER IN THE DESIGN PROCESS AND MODIFY THE FOLLOWING PARAGRAPH AS NECESSARY.

A. Provide a minimum of eight (8) hours of on-site instruction and training to UMHHC Maintenance and Systems Monitoring personnel on the operation of the control systems for the installation.

B. Training shall be a dedicated effort and not combined with other close-out services like start-up and commissioning.

C. Instruction and training shall be performed by a competent Contractor representative familiar with the control systems operation, maintenance and calibration.

D. UMHHC may require that training hours be split amongst multiple groups or shifts of personnel. Coordinate division of training hours with UMHHC prior to beginning training.

3.13 TABLE 1- MINIMUM CONTROLLER BACNET BIBB PERFORMANCE

LEGEND	
Cells Represented ASHRAE BACnet Minimum BIBB Requirements	
n/a = not available or provided	
* = available or provided (exceptions are noted)	

BIBB Abbrev	BACnet Building Blocks (BIBB) Name	Siemens Desigo B-AWS		Siemens PX	Honeywell CP-PC-6A	ASI JASIC
		Read	Write / Ack			
Data Sharing						
DS-RP-A	Data Sharing-ReadProperty-A	*		*	*	*
DS-RP-B	Data Sharing-ReadProperty-B		*	*	*	*
DS-RPM-A	Data Sharing-ReadPropertyMultiple-A	*		*	*	*
DS-RPM-B	Data Sharing-ReadPropertyMultiple-B		*	*	*	*
DS-WP-A	Data Sharing-WriteProperty-A	*		*	*	*
DS-WP-B	Data Sharing-WriteProperty-B		*	*	*	*
DS-WPM-A	Data Sharing-WritePropertyMultiple-A	*		*	*	*
DS-COV-A	Data Sharing-Chang of Value (COV)-A	*		*	DS-COV-A DS-COV-B	*
DS-COVP-A, B	Data Sharing-Chang of Value, Property (COVP)-A, B			n/a	DS-COVP-A	n/a
DS-COVU-A, B	Data Sharing-Chang of Value, Unsolicited (COVU)-A, B			n/a	n/a	n/a
DS-V-A	Data Sharing - View - A	*		n/a	DS-V-A	*
DS-AV-A	Data Sharing - Advanced View - A	*		n/a	DS-AV-A	n/a
DS-M-A	Data Sharing - Modify - A	*		n/a	DS-M-A	*
DS-AM-A	Data Sharing - Advanced Modify - A	*		n/a	DS-AM-A	n/a
Scheduling						
SCHED-VM-A	Scheduling-View and Modity-A	*		n/a	SCHED-VM-A	*
SCHED-AVM-A	Scheduling-Advanced View and Modify-A	*		n/a	SCHED-E-B	n/a
SCHED-WS-A	Scheduling-Weekly Schedule-A	*		n/a	SCHED-WS-A	n/a
SCHED-I-B	Scheduling - Internal - B			Internal and External B	*	Internal and External B
Alarm and Event Management						
AE-N-A	Alarm and Event-Notification-A	*		*	AE-N-I-B	*
AE-ACK-A	Alarm and Event-ACK-A	*		*	AE-N-I-B + EBI AE-ACK-A AE-ACK-B	*
AE-ASUM-A	Alarm and Event-Alarm Summary-A	*		n/a	AE-ASUM-A AE ASUM-B	*
AE-INFO-A	Alarm and Event-Information-A	*		*	AE-INFO-A AE INFO-B	*
AE-LS-A	Alarm and Event-Life Safety - A	*		n/a	*	n/a
AE-ESUM-A	Alarm and Event-Enrollment Summary-A	*		*	AE-ESUM-A AE ESUM-B	*
AE-VM-A	Alarm and Event Management - View and Modify - A	*		n/a	n/a	*
AE-AVM-A	Alarm and Event Management - Advanced View and Modify - A	*		n/a	n/a	n/a
AE-VN-A	Alarm and Event Management - View Notifications - A	*			n/a	*
AE-AVN-A	Alarm and Event Management - Advanced View Notifications - A	*		n/a	n/a	n/a
AV-ELVM-A	Alarm and Event Management - Event Log View and Modify	*		n/a	n/a	n/a
AE-AS-A	Alarm and Event Management - Alarm View Summary	*		n/a	n/a	n/a
Trending						
T-V-A	Trending-Viewing and Modifying Trends-A	*		T-VMT-I-B; T-VMT-E-B	T-V-A; T-VMT-I-B	*
T-ATR-A	Trending-Automated Trend Retrieval-A	*		*	n/a	*
T-AVM-A	Trending-Advanced View and Modifty-A	*		*	T-AVM-A T-ATR-B	*
Network Management						
NM-CE-A	Network Management-Connection Establishment-A	*		n/a	n/a	n/a
NM-RC-B	Network Management-Router Configuration, B			n/a	*	n/a
Device Management						
DM-DDB-A	Device Management-Dynamic Device Binding-A	*		*	*	*
DM-DDB-B	Device Management-Dynamic Device Binding-B	*	*	*	*	*
DM-DOB-A	Device Management-Dynamic Object Binding-A	*		*	EBI DM-DOB-A	*
DM-DOB-B	Device Management-Dynamic Object Biding-B		*	*	*	*
DM-DCC-A	Device Management-DeviceCommunicationControl-A	*		*	*	*
DM-TM-A	Device Management-Text Message-A		*	n/a	n/a	n/a
DM-MTS-A	Device Management-Manual Time Synchronization-A	*		n/a	*	*
DM-ATS-A	Device Management-Automatic Time Synchronization-A	*		n/a	n/a	*
DM-TS-A	Device Management-TimeSynchronization-A	*		*	EBI A DM-TS-B	*
DM-UTC-A	Device Management-UTCTimeSynchronization-A	*		*	*	*
DM-RD-A	Device Management-ReinitializeDevice-A	*		*	EBI A DM-RD-B	*
DM-BR-A	Device Management-Backup and Restore-A	*		*	EBI DM-BR-B	*
DM-LM-A	Device Management-List Manipulation-A	*		n/a	*	*
DM-LM-B	Device Management-List Manipulation-B		*	*	EBI A DM-LM-B	*
DM-OCD-A	Device Management-Object Creation and Deletion-A	*		*	EBI DM-OCD-A DM-OCD-B	n/a
DM-ANIM-A	Device Management-Automatic Network Mapping-A	*		n/a		*
DM-ADM-A	Device Management-Automatic Device Mapping-A	*		n/a	EBI DM-ADM-A	*

END OF SECTION 230900

UNIVERSITY OF MICHIGAN
ARCHITECTURE, ENGINEERING AND CONSTRUCTION

ARCHITECTURE & ENGINEERING
326 East Hoover, Mail Stop B
Ann Arbor, MI 48109-1002
Phone: 734-764-3414
Fax: 734-936-3334

BuildingName
The Description of the Project
P00000000 0000

SPECIFICATION DIVISION 23

NUMBER SECTION DESCRIPTION

DIVISION 23 HEATING, VENTILATING AND AIR CONDITIONING (HVAC)
SECTION 230910 - VAV/COMBINATION SASH FUME HOOD LABORATORY CONTROLS-DDC

END OF CONTENTS TABLE

NEW SECTION: OCTOBER 2011.

JULY 2013: REVISED TO INDICATE THAT ALL PHOENIX CONTROLS SHALL BE LONWORKS® BASED AND THAT BACNET PROTOCOL IS NOT ACCEPTABLE, TO ASSURE PHOENIX CONTROL POINTS CAN BE MONITORED BY BAS. D. KARLE FOR HVAC MTT.

DECEMBER 2013: ADDED (ALL IN PART 3): DO NOT "CLIP" VALVES. LTAU VOLUME FOR VALVES SERVING HOODS WITH HORIZONTAL SASHES TO BE SET TO MAINTAIN THE REQUIRED FACE VELOCITY WITH THE SASHES IN THE POSITION THAT CREATES THE MAXIMUM FREE AREA OPENING. ALSO: ALARM SETTINGS FOR FLOOR MOUNTED HOODS. D. KARLE FOR HVAC MTT.

JUNE 2015: REVISED TO REQUIRE REHEAT COIL BE PROVIDED BY LCC, ADDED REHEAT COIL SPEC. ADDED REQUIREMENT FOR VALVE CALIBRATION CERTIFICATE UNDER SUBMITTALS, ADDED POST SUBMITTALS ARTICLE. IMPROVED DESCRIPTION OF VALVE OPERATION UNDER 2.3.A TO REQUIRE THAT CHARACTERIZED VALVE POSITION BE THE PRIMARY MEANS OF ACHIEVING AIR VOLUME SETPOINT, ADDED THAT ADDITIONAL OR FEWER AIR VALVES ARE THE RESPONSIBILITY OF THE CONTRACTOR TO PROVIDE IF A MANUFACTURER OTHER THAN THE DESIGN BASIS IS SUPPLIED SINCE FLOW RANGE V. VALVE DIAMETER VARIES BETWEEN MFR.S, REQUIRED THAT +/-5% VALVE ACCURACY BE OVER THE ENTIRE CATALOGED VOLUMETRIC OPERATING RANGE OF THE LTAU, REQUIRED FUME HOOD MONITORS BE PROVIDED WITH A COMMON ALARM SILENCE BUTTON SINCE SOME MFR.S WERE PROVIDING MULTIPLE SILENCE BUTTONS. REVISED BUILDING AUTOMATION INTERFACE REQUIREMENTS TO REQUIRE PHOENIX MACRO SERVER AND SIEMENS PXC. STRENGTHENED REQUIREMENT THAT LTAU INDICATED AIR VOLUME NOT TO BE ADJUSTED BASED UPON FIELD MEASUREMENTS (ART. 3.2). D. KARLE PER HVAC MTT.

JUNE 2016: DO NOT USE THIS SPECIFICATION WITHOUT DISCUSSION WITH THE HVAC AND CONTROLS MECH TECH TEAM. SPECIFICATION REVISED FOR APPLICABILITY TO HVAC LAB CONTROLS, BUT ONLY IN LABS WITH VARIABLE AIR VOLUME FUME HOODS, INCLUDING COMBINATION SASH HOODS. ALL OTHER LABS ARE INCLUDED IN SCOPE OF MS230900. REFER TO DESIGN GUIDELINE 230030 FOR ADDITIONAL GUIDANCE. D. APPEL

SEPT 2016: IMPROVED WORDING IN "SUMMARY", IMPROVED WORDING IN "DIVISION OF WORK" REGARDING WHERE THIS SPEC APPLIES, I.E. ALL LABS CONTAINING VAV OR COMBO SASH HOODS. PER HVAC MTT. D. KARLE

DIVISION 23 HEATING, VENTILATING AND AIR CONDITIONING (HVAC)
SECTION 230910 - VAV/COMBINATION SASH FUME HOOD LABORATORY CONTROLS-DDC

PART 1 - GENERAL

1.1 RELATED DOCUMENTS

INCLUDE PARAGRAPH 1.1.A AND B IN EVERY SPECIFICATION SECTION. EDIT RELATED SECTIONS 1.1.B TO MAKE IT PROJECT SPECIFIC.

A. Drawings and general provisions of the Contract, Standard General and Supplementary General Conditions, Division 01 Specification Sections, and other applicable Specification Sections, in particular the Related Sections listed below, apply to this Section.

CAREFULLY VERIFY, EDIT AND COORDINATE RELATED SECTIONS.

B. Related Sections:

1. Section 115313: Laboratory Chemical Fume Hoods
2. Section 233300: Air Duct Accessories and RGDs
3. Section 230900: Mechanical Systems Controls
4. Section 230593: Testing, Adjusting, and Balancing (TAB)
5. Division 26: Electrical

1.2 SUMMARY

A. Section Includes:

1. Controls and terminal airflow units for laboratories that contain variable air volume (VAV) and combination sash fume hoods, including controls for Laboratory Terminal Airflow Units (LTAUs), fume hoods, reheat coils, chilled beams, fin tube, and other devices to control laboratory (or other specialized spaces) pressurization, temperature, and other functions as indicated.
2. Reheat coils and sound attenuators for LTAUs.
3. Laboratory Control system interface with Owner's Building Automation System.

1.3 REFERENCES

A. Abbreviations, Acronyms, Definitions (partial list)

1. BAS: Owner's Siemens Apogee brand Building Automation System.
2. Owner: The University of Michigan.
3. Laboratory: For the purposes of this specification, a broad designation for any space served by laboratory controls.

1.4 DIVISION OF WORK

***IMPORTANT**: DESIGNER SHALL CLEARLY DELINEATE ON THE PROJECT DRAWINGS WHICH SPACES ARE TO BE SERVED BY 230910 "VAV/COMBINATION SASH FUME HOOD LABORATORY CONTROLS-DDC" (I.E. THIS SPECIFICATION) VERSUS 230900 "MECHANICAL SYSTEMS CONTROLS". MAKE A CLEAR DELINEATION ON THE CONTROL DRAWINGS. NORMALLY, LAB*

MECHANICAL CONTROL OF ANY SPACE NOT UTILIZING VAV FUME HOODS ARE INCLUDED IN THE SCOPE OF 230900, INCLUDING ANIMAL ROOMS.

A. The VAV fume hood Laboratory Controls Contractor (LCC) shall provide a complete lab control system as described in this specification.

1. Any space containing VAV or combination sash fume hoods shall be provided with the laboratory controls and terminal devices specified in this specification section.
2. All items specified shall be provided by the LCC, including items specified in Related Sections, except where explicitly indicated otherwise.
3. The LCC shall be an installer authorized by the laboratory controls manufacturer.
4. Provide supervision and instruction to insure proper installation of all furnished laboratory control components.

B. The LCC shall furnish LTAUs, LTAU sound attenuators, and LTAU reheat coils to the mechanical contractor. The mechanical contractor shall install in the duct work.

C. The mechanical contractor shall provide duct transitions to connect to LTAUs/LTAU reheat coils, and all other components not specified in this specification section.

1.5 COORDINATION

A. Provide controls and control wiring compatible with equipment provided by others and with existing equipment and controls.

B. Coordinate the installation of controls with the installation of other project equipment.

C. Ensure all control components are located and installed correctly so that the specified and intended performance and the sequence of operation is achieved, including components supplied and/or installed by others.

D. Coordinate with laboratory equipment suppliers (fume hoods, etc.) regarding cut-out dimensions for alarm monitors and to assure proper accommodation is made for the installation of sash sensors and other devices related to laboratory airflow controls.

1.6 ITEMIZED QUOTATION

A. The Laboratory Controls Contractor shall submit with bid, an itemized cost breakdown listing all major components, labor cost (including subcontractor labor and material cost), and engineering costs, for base bid and for each alternate, for the entire work scope of the Laboratory Controls. When requested, provide the itemized breakdown to the Owner post bid, for review and approval.

1.7 SUBMITTALS

A. Submit the following for approval:

1. A separate schematic drawing and wiring diagram for each laboratory room or zone, with sequence of operation. Indicate all set points and alarm settings.

2. Equipment schedule for each room or zone, with the following information:
    a. Equipment tag, room served, occupied/unoccupied min., max., and offset CFM; lab subnet description, name, and network address; network and power trunk identifier.
    b. Model number of each LTAU and control component.
    c. Function of each LTAU and control component.
3. Equipment data sheets indicating performance, wiring diagram, dimensions, weights, required clearances, component locations, and location and size of each field connection.
    a. Data sheets shall be organized behind sheet tabs. Each sheet tab shall indicate the category or component name (i.e. LTAUs, control valves, sensors, etc.)
4. Accuracy certificate, certified by an officer of the company, indicating that LTAU control error will not exceed +/- 5% of flow set point, over the manufacturer's cataloged volumetric operating range of the LTAU.
5. Ductwork connection types and sizes.
6. Network diagram indicating routers, servers, and peripheral devices, including location of each device (room number) and indicating network connection points to Owner's BAS system.
7. Wiring diagrams for each network device.
8. Wiring diagrams and locations of power supplies.
9. Conduit and wire/cable data sheets.
10. Octave band and A-weighted sound power data for each LTAU, with and without sound attenuators.
11. Installation, operation, and maintenance instructions for each component. Include calibration method, calibration tolerance, inspection period, and cleaning method.

1.8 CLOSE-OUT SUBMITTALS

A. Submit the following as a condition of final payment:

1. As-built schematic drawings and wiring diagrams. Indicate set points, settings and adjustments of all components.
2. Calibration certificate, signed by an officer of the company, indicating that each LTAU was factory calibrated at a minimum of 48 points and that the factory determined calibration data was loaded into the LTAU's respective controller. Indicate if calibration data was loaded into the LTAU controller at the factory or in the field.

1.9 DELIVERY, STORAGE AND HANDLING

A. Mark each LTAU before factory shipment with a unique identifier corresponding to the LTAU drawing schedule.

B. Shipping and storage protection shall be provided by manufacturer to insure that the interior and exterior of components are completely protected from damage, dirt or weather. Components shall be continuously covered with plastic or other durable means, until just prior to installation. Maintain protection after installation to protect against on-going construction activities.

1.10 QUALITY ASSURANCE

A. Manufacturers and Products: The products and manufacturers specified in this Section establish the standard of quality for the Work. Subject to compliance with all requirements, provide specified products from the manufacturers named in Part 2.

B. Reference Standards: Products in this section shall be built, tested, and installed in compliance with the specified quality assurance standards; latest editions unless noted otherwise.

1. AMCA 610 Laboratory Method of Testing Airflow Measurement Stations for Performance Ratings.
2. AHRI Standard 410 "Forced-Circulation Air-Cooling and Air-Heating Coils.
3. AHRI 880 Performance Rating of Air Terminals.
4. NFPA 70 National Electric Code.
5. NFPA 90A Installation of Air-Conditioning and Ventilating Systems.
6. ASTM C916 Standard Specification for Adhesives for Duct Thermal Insulation.
7. ASTM E84 Standard Test Method for Surface Burning Characteristics of Building Materials
8. UL 916 Energy Management Equipment
9. Components shall be Underwriters Laboratories (UL) or Intertek (ETL) listed.

1.11 WARRANTY

A. Provide a complete parts and labor warranty for a minimum of 3 years from the date of Substantial Completion.

B. Provide 24 hour per day service during the warranty period, with a maximum response time from when service is requested of 24 hours.

PART 2 - PRODUCTS

2.1 MANUFACTURERS

A. Acceptable Laboratory Controls Manufacturers:

1. Phoenix Controls
2. Siemens (Direct Digital Control venturi valve solution)

2.2 GENERAL

A. Provide a complete laboratory control system for any space containing VAV or combination sash fume hoods. This shall include all devices specified in this section and programming, controllers, software; temperature, pressure, and other sensors/transmitters; control valves; control, network, and power wiring; routers, servers, and all other devices required for a complete system.

1. Laboratory control system shall be Direct Digital Control (DDC) type.
2. Laboratory control system shall function to achieve the sequences of operation detailed on the drawings.

3. Each laboratory shall have a dedicated laboratory control system. Laboratory control systems shall be independent and stand-alone from the Owner's BAS. Failures of the BAS system or network communications between the BAS and the Laboratory control system (cut communication cables, router or server failures, etc.) shall have no impact on individual laboratory control.
4. The laboratory control system shall perform the following control functions:
    a. Lab Pressurization Control: Control supply and auxiliary exhaust LTAUs at a volumetric offset to maintain lab pressurization positive, negative, or neutral. Controller shall maintain a constant offset (adjustable) between the sum of the room's total exhaust and the make-up/supply air volumes. This offset shall represent the volume of air that will transfer to or from the corridor or other adjacent rooms. Pressurization control shall consider networked devices, non-networked devices, and any number of constant volume devices.
    b. Lab Temperature Control: Regulate lab space temperature through a combination of supply air volumetric control and control of reheat coils and other auxiliary temperature control devices, in response to temperature sensor(s).
    c. Occupancy Control: Reset LTAU minimum volume settings and/or temperature control set points, based upon external signals from occupancy detectors, local over-ride buttons, and similar devices.
    d. Constant Volume Control: The LTAU shall maintain a constant airflow set point.
    e. Fume Hood Control: Control the face velocity of fume hoods indicated to be variable air volume (VAV) type.
    f. Fume Hood Monitoring: Alarm various conditions at each fume hood.
    g. Other lab control functions as indicated on the drawings.
    h. Interface with the Owner’s Siemens Apogee PPCL Building Automation System.
5. Input power requirements for laboratory control devices shall not exceed 120 VAC.
6. Each lab room shall include a labeled Room Differential Pressure Indicating Gauge to indicate room pressurization relative to the adjacent room or corridor. Provide an engraved POS/NEG label (with 3/8” high lettering) adjacent to the gauge labeled “Correct Room Pressure Offset: X, where X = “POS” (positive) or “NEG” (negative) as indicated by the room volumetric offset indicated on the design documents.

2.3 LABORATORY TERMINAL AIRFLOW UNITS

A. The laboratory terminal airflow unit shall be of venturi control type utilizing a cone shaped element. The position of the valve cone assembly shall be factory characterized to determine a position versus air flow volume relationship. Air flow control shall be achieved by moving the valve cone assembly to the factory characterized position that provides the required air volume. Air flow control shall not be achieved by air flow measurement. However, air flow measurement shall be permitted at inlet velocities 350 fpm and greater, for fine tuning valve cone assembly position after movement to the factory characterized position. Control shall be pressure independent, accomplished by the cone/spring element continuously adjusting position relative to the venturi orifice to compensate for duct pressure fluctuations.

B. Provide LTAUs of the diameter and volumetric range indicated on the drawings. Provide larger, smaller, fewer, or additional valves versus that indicated when necessary to match the volumetric range specified on the drawings (this may be necessary when providing valves from a mfr. other than the design basis).

1. Include all required costs to adjust duct layout and provide any required transition fittings or additional duct necessary to accommodate the particular valves provided.

C. LTAUs shall have an equal percentage flow characteristic to provide stable control at low flow values. Butterfly, opposed blade, or parallel blade style dampers or VAV boxes are not acceptable

D. LTAUs shall provide pressure independent air flow control and the scheduled air flows over a pressure range of 0.3" WG to 3.0" WG static pressure drop across the valve. LTAU shall respond within 1 second of a change in duct static pressure/flow change under all conditions.

E. Total LTAU control error (including the combined effects of nonlinearity, hysteresis, repeatability, temperature and drift over a one year period) shall not exceed +/- 5% of flow set point. Example: If the LTAU's current flow set point is 1000 CFM, the volume of air delivered by the LTAU shall be within +/- 50 CFM of that set point. This error shall not be exceeded regardless of duct inlet or exit configurations, over the entire manufacturer’s cataloged volumetric operating range of the LTAU, and at any pressure drop across the LTAU from 0.3" WG to 3.0" WG static pressure.

1. Systems using air flow sensors (Siemens):
   a. The +/- 5% control error specified above shall be achieved when one straight equivalent duct diameter is provided upstream of the inlet to the LTAU, regardless of LTAU exit conditions.
   b. Provide minimum one straight equivalent duct diameter upstream of the inlet to the LTAU. Transitions connecting to the inlet or outlet of the LTAU and associated reheat coils shall not exceed 30 degrees.
   c. Airflow sensors shall be constructed of corrosion proof material for room supply, return, and general exhaust air. Construct of 316L stainless steel (parts exposed to exhaust air) for all other exhaust applications.

F. Every LTAU shall be factory calibrated across the manufacturer's cataloged volumetric flow range using NIST traceable air flow stations and instrumentation with a combined accuracy of +/- 1 percent of signal over the entire range of measurement. Air flow shall be verified to be within an accuracy of +/- 5 percent of signal at a minimum of 48 different air flows. LTAU air flow shall be calibrated with 0.6" of static pressure across the LTAU. The resulting factory determined calibration data shall be loaded into the LTAU's respective controller, at the factory or in the field during installation. Provide factory calibration certificate for each valve, certified by an officer of the manufacturer.

G. LTAUs shall be constructed of minimum 16 gauge aluminum. Shaft and shaft support brackets shall be 316 stainless steel. Pivot arm and internal linkage shall be aluminum or stainless steel. Springs shall be spring-grade stainless steel. Shaft bearing surfaces shall be made of Teflon, polyester, or polyphenylene sulfide composite.

NOTE BELOW PARAGRAPH. IF LTAUS OTHER THAN FUME HOOD LTAUS (EXAMPLE: SNORKELS HANDLING CORROSIVE CHEMICALS) NEED CORROSION PROTECTION, BE SURE TO INDICATE THAT FACT ON THE DRAWINGS. NOTE THAT LTAUS SHOULD NOT BE USED ON THE EXHAUST OF CAGE AND RACK WASH EQUIPMENT BECAUSE EVEN LTAUS WITH ENHANCED COATING SYSTEMS HAVE NOT PROVEN TO HOLD UP TO THE CORROSIVE EFFECTS OF THE EXHAUST FROM THESE DEVICES. RATHER, CAGE OR RACK WASHERS SHOULD BE EXHAUSTED BY DEDICATED EXHAUST FAN(S).

1. Additional construction requirements for LTAUs connected to fume hood exhaust or where indicated on drawings:
   a. Coat LTAU with minimum 5.0 mil dry film thickness Heresite P403 coating material, applied and baked per coating manufacturer's recommendations.
   b. Shaft, pivot arm and linkage, and other internal metal parts (nuts, bolts, rivets, etc.) shall be stainless steel.
   c. Shaft shall be Teflon coated.
   d. Shaft bearing surfaces shall be made of Teflon or polyphenylene sulfide composite.

IF LOW LEAKAGE CONSTRUCTION IS REQUIRED, THE DESIGNER MUST SPECIFY THE MAXIMUM LEAK RATE PERMITTED FOR CASING LEAKAGE AND SHUT-OFF LEAKAGE. CONSULT MFR.'S CATALOGS TO DETERMINE AVAILABLE LEAKAGE PERFORMANCE OPTIONS.

H. Low Leakage Construction

1. Provide where indicated.
2. Provide low leak seal materials compatible with the severity of service indicated by the particular valve coating that has been specified.

I. Supply air LTAUs shall come factory insulated with minimum 3/8" thick flexible closed cell polyethylene insulation with a flame/smoke rating not to exceed 25/50, K value not to exceed 0.270 btu-in/hr-ft^2-°F @ 75°F mean temperature, and a permeability maximum of 0.08 Dry Cup. Perm-In. Rubatex Therma-Cel, AP/Armaflex, or equivalent. Insulation shall be installed per insulation mfr. recommendations using mfr. recommended adhesives and joint vapor barrier sealants.

DESIGNER SHALL PROVIDE PERFORMANCE DATA FOR THE SOUND ATTENUATORS ON THE DRAWINGS. DESIGNER MUST SPECIFICALLY INDICATE WHERE ATTENUATORS ARE REQUIRED. DESIGNER SHALL REVISE SPEC SECTION REFERENCE BELOW, IF REQUIRED.

2.4 LABORATORY TERMINAL AIRFLOW UNIT SOUND ATTENUATOR

A. Furnish sound attenuators only when specifically indicated.

B. Attenuator shall be properly matched to each individual LTAU to meet the sound performance scheduled. Provide stainless steel packless type attenuators for all fume hood and "wet" exhaust applications.

C. Attenuator pressure drop shall not exceed 0.20 in. w.c. at the LTAUs maximum rated flow, unless indicated otherwise on drawings.

D. Refer to Related Section "Sheet Metal Accessories" for additional attenuator specifications.

2.5 LTAU/LAB CONTROL

A. The control devices (controllers) shall be microprocessor-based DDC type and shall linearly regulate airflow based on digital control signals. The device shall generate a digital feedback signal that represents its airflow.

B. Laboratory controls shall be segregated into subnets at a lab room level. Provide commercially available routers to isolate each subnet from BAS communications, when required. All control points including all subnet points (both inputs and outputs) shall be available to the BAS for monitoring and trending. Laboratory control performance shall be unaffected by the quantity of points being monitored, processed, or controlled.

1. Phoenix Controls: All control shall be LONWORKS® based. BACnet protocol is not acceptable.

C. Speed of Response:

1. Labs with VAV fume hoods or where indicated:
   a. Speed of response shall be less than 1 second. High speed electronic actuators shall be provided.
      1) Phoenix Controls Accel II Venturi Valves/Celeris
      2) Siemens venturi style air valves with high speed actuators

D. The control devices shall store control algorithms in non-volatile, re-writeable memory. The device shall be able to stand-alone or be networked with other room-level digital airflow control devices using an industry standard protocol.

E. Room-level control functions shall be embedded in and carried out by the controllers using peer-to-peer distributed control architecture. Critical control functions shall be implemented locally.

F. The control devices shall use industry standard 24 VAC power.

G. It shall be possible to connect a notebook PC commissioning tool at each lab room and every point associated with that room's control shall be accessible from that connection point.

H. The control devices shall have built-in integral input/output connections ("points") that address all network and non-network sensors switches and control devices indicated on the drawings and as necessary to accomplish the required sequence of operation. Unless explicitly indicated otherwise in the sequence of operation, every device controlled shall be controlled by an output dedicated to that device. For example, multiple actuators **shall not** be controlled by the same 0 to 10 Vdc or 4 to 20 mA output. At a minimum, the airflow controller shall have:

1. Three universal inputs capable of accepting 0 to 10 Vdc, 4 to 20 mA, 0 to 65 K ohms, or Type 2 or Type 3 10 K ohm @ 25 degree C thermistor temperature sensors.
2. One digital input capable of accepting a dry contact or logic level signal input.
3. Two analog outputs capable of developing either a 0 to 10 Vdc or 4 to 20 mA linear control signal.
4. One Form C (SPDT) relay output capable of driving up to 1 A @ 24 VAC/VDC.

I. Provide any other devices necessary to accomplish the intended sequence of operation.

J. Control devices shall meet FCC Part 15 Subpart J Class A and be UL 916 listed.

K. Actuators

HIGH SPEED ELECTRONIC ACTUATORS CAN BE SET FAIL LAST POSITION AS WELL AS FAIL OPEN OR FAIL CLOSED.

1. High Speed Electronic:
   a. UL 916 listed high-speed electronic actuator with an actuator stroke speed of 1 second or less when positioning the valve to respond to a flow change of 5:1. Factory mounted to the valve. Loss of main power shall cause the valve to position itself in a failsafe state. This position shall be maintained constantly without external influence, regardless of external conditions on the valve (within product specifications). Failsafe states shall be as indicated on drawings. Where not indicated, supply LTAUs shall fail normally closed-minimum position, exhaust LTAUs shall fail normally open-maximum position.

2.6 VAV FUME HOOD CONTROL

A. The fume hood controller shall use a sash position sensor to measure sash opening to proportionally control the hood's exhaust airflow. Controller shall maintain an "average" constant face velocity to +/- 5% tolerance, over a minimum range of 20% to 100% of sash travel.

B. The hood exhaust airflow control device shall respond to a change in sash position by reaching 90% of the final commanded position within one (1) second of the sash reaching 90% of its final position, with no more than a 5% overshoot or undershoot, and with no noticeable oscillation. This shall be accomplished at any sash movement rate up to 1-1/2 feet per second.

C. The fume hood monitor shall receive sash position signals from sash sensors. The monitor shall compute the total open sash area and then output an exhaust airflow control command signal to the appropriate exhaust airflow control device (LTAU).

1. A vertical sash position sensor shall be employed to measure the height of each vertically moving fume hood sash. The vertical sash sensor shall consist of a precision 10-turn potentiometer mechanically coupled to a constant tension spring reel. Resolution shall be +/- 1/2 inch or better. A stainless steel, burr and snag-free cable shall be attached to the spring reel. Expected lifetime based on manufacturer's tests shall be over 200,000 full height sash movements. Sash sensor shall be installed in a location on the fume hood easily accessible for service.
2. A horizontal sash position sensor shall be provided for each horizontal sash. The horizontal sash sensor shall consist of magnetic bars or a sensor strip/actuator block. Resolution shall be +/- 1/2 inch or better.
3. Provide both vertical and horizontal sash position sensors for hoods with combination sashes.

2.7 FUME HOOD MONITORS

CONSIDER IF OTHER LABORATORY EQUIPMENT WOULD BENEFIT FROM BEING EQUIPPED WITH A FUME HOOD MONITOR AND INDICATE THAT EQUIPMENT ACCORDINGLY. EXAMPLES: EXISTING FUME HOODS, BIO-SAFETY CABINETS.

A. Provide fume hood monitors for all chemical fume hoods and for other laboratory equipment where indicated.

1. Monitor shall include audible alarm, visual LED alarm, and a common (single) alarm silence button.
2. The fume hood monitor shall provide an alarm indication for the following conditions:
   a. Low fume hood face velocity as detected by:
      1) Insufficient differential static pressure as detected by the exhaust airflow LTAU pressure switch (Phoenix).
      2) Insufficient air volume, as detected by the air flow station (Siemens).
      3) Sash raised above sash stop position.
      4) Signal loss between the exhaust airflow LTAU and the fume hood monitor (VAV hoods only).
   b. When an alarm condition is detected, audible and visual alarm indicators shall activate. Pushing the alarm silence button shall mute the alarm for an adjustable time delay, initially set at 10 minutes. Alarm shall re-sound after the time delay, until alarm condition clears. Visual alarm shall remain lit until alarm conditions clears.
3. Sash position shall be sensed by using a vertical sash position sensor. Vertical sash position sensor shall be as specified under the article "VAV Fume Hood Control".
4. Fume hood monitor shall be suitable for surface mounting on the front of the fume hood.
5. Approved fume hood monitors:
   a. Phoenix FHM430 Controller (Variable volume fume hoods)

b. Siemens

2.8 SENSORS/TRANSMITTERS

A. Except as noted below, sensors and transmitters shall comply with the requirements of Related Section "Mechanical Systems Controls", including approved manufacturers.

1. Room temperature sensors (RTS) shall have a digital temperature display, high accuracy temperature set point slide, and a minimum temperature range of 55-95˚F. 10K Type 2 thermistor, inaccuracy of ±0.5˚F or less between 55-95˚F. Provide with integral communications jack.
   a. Approved manufacturers: Phoenix, Siemens
   b. Provide combination room temperature/humidity sensors where indicated.
      1) Features: same as RTS.
      2) Temperature: Thermistor, same as RTS.
      3) Humidity transmitter: 4-20 mA output, inaccuracy ±2% or less between 15%-95% RH at 25˚C.
         a) Approved manufacturer: Phoenix.

2.9 CONTROL VALVES

A. Control valves shall comply with the requirements of Related Section "Mechanical Systems Controls", including approved manufacturers.

1. Unless noted otherwise, control valves for reheat coils, cooling coils, chilled beams, fin tube radiation, and other terminal devices shall utilize 3-position floating point electronic actuators as specified for "TECs" in Related Section Mechanical Systems Controls.
   a. Fail-last-position: Reheat and cooling coils; chilled beams.
   b. Fail open (maximum heat): Fin tube.
   c. Fail closed (zero heat): Reheat coils serving animal rooms or ventilated cage racks.

2.10 ROOM DIFFERENTIAL PRESSURE INDICATING GAUGES

A. Dial (4" dia.) in metal case, diaphragm actuated, black figures on white background, front recalibration adjustment, scale -0.25" WC to +0.25" WC, suitable for surface or flush mounting. Accuracy +/- 2% of full scale. With plastic gauge mounting plate for flush mounting and space pressure sensor consisting of pressure port, barbed tubing connection, and sensor plastic mounting plate suitable for mounting on a standard electrical junction box.

B. Approved Manufacturers:

1. Dwyer “Magnehelic” with A-465 pressure sensor and A-464 flush mounting plate (provide A-368 mounting bracket for surface mount applications)

2.11 MISCELLANEOUS COMPONENTS

A. Except as specified in this section, laboratory controls shall be provided in compliance with the requirements of Related Section "Mechanical Systems Controls", including approved manufacturers.

2.12 POWER SUPPLIES

A. Provide all necessary power supplies/control transformers, power distribution wiring, etc. for a complete operating system. This includes but is not limited to power supplies for lab airflow controls, sensors/transmitters, control valves, and network devices such as routers and servers.

BELOW PARAGRAPH INDICATES THAT POWER SUPPLIES SHOULD BE INSTALLED ABOVE DOORS TO LABS. DESIGNATE THE LOCATION OF THIS EQUIPMENT ON THE DRAWINGS. WORK WITH ELECTRICAL ENGINEER TO DESIGNATE THE RECEPTACLE PANEL CIRCUITS TO FEED LAB CONTROL POWER SUPPLIES. DEPENDING ON LOAD, MULTIPLE POWER SUPPLIES MAY BE FED FROM A SINGLE 120 VAC CIRCUIT.

B. Install power supplies secured to a wall and mounted above the doors to labs, unless indicated otherwise. Utilize receptacle panel circuits designated for powering lab control power supplies.

C. Provide power supplies for lab airflow controls in NEMA 1 metal enclosures, adequately ventilated to prevent overheating of the equipment, with exterior labeled "Laboratory Airflow Controls Power Supply", and listing the room numbers served. Maximum cabinet projection from wall shall be 8 inches. Label each secondary circuit inside the cabinet with the room number(s) served.

1. Control transformers shall be rated NEC Class 2 and shall meet all the requirements and recommendations of the laboratory airflow controls manufacturer.
2. No more than five pressurization zones shall be served from a single control transformer. No control transformer shall exceed 500 VA.
3. Each pressurization zone shall be powered by a dedicated (isolated) secondary circuit. Each secondary circuit shall include a disconnect switch, "power on" indicator, and be current limited with a slow blow fuse or circuit breaker.
4. Provide a disconnect switch, with shielded terminations, for line side power (one per control transformer). Locate inside the power supply enclosure.

D. Provide network power supplies of type and size recommended by lab control manufacturer.

THE UPS SHOULD BE CONNECTED TO A STANDBY POWER CIRCUIT (EMERGENCY GENERATOR) WHEN STANDBY POWER IS AVAILABLE IN THE BUILDING. COORDINATE WITH ELECTRICAL ENGINEER.

E. Provide an uninterruptible power supply (UPS) for any server provided to allow communication to the BAS system.

1. Provide a UPS large enough to operate the server for a minimum of 5 minutes upon a loss of normal power.

2.13 INTERFACE TO BUILDING AUTOMATION SYSTEM

A. The laboratory control system network shall digitally interface with the BAS system. The interface to the BAS shall be BACnet over IP/Ethernet communications protocol.

B. Every room-level point shall be available to the BAS for monitoring, trending and control, both inputs and outputs. The laboratory controls system shall maintain a cache of all points to be monitored by the BAS. The room-level airflow control devices shall update this cache continually.

C. Provide all equipment, including but not limited to routers, servers, software interface drivers, and network interface cards to allow communication between the laboratory airflow controls and the BAS.

DESIGNER MUST INDICATE ON THE DRAWINGS, THE QUANTITY OF FIELD LEVEL NETWORKS CONNECTING LAB CONTROLS TO THE U-M BAS, AND THE LOCATIONS WHERE THE NETWORKS CONNECT TO U-M BAS. TYPICALLY THIS WILL BE AT A DATA CLOSET OR AT BUILDING DDC PANELS. CONTACT THE U-M DESIGN MANAGER, WHO WILL OBTAIN A NETWORK RISER DIAGRAM FROM U-M PLANT DEPARTMENT FOR DESIGNER'S USE.

1. The LCC is responsible for providing the entire network up to and including final network connection to Owner's BAS via connection to an Ethernet switch at a building direct digital controller or data closet location(s), as indicated on the drawings.
2. Provide servers and routers specifically designed for the laboratory controls network and recommended by the laboratory control manufacturer.

THE NEXT PARAGRAPH SPECIFIES A "RMI (ROOM INTEGRATOR)" FOR PHOENIX AND A "PXC" SERVER FOR SIEMENS, WHICH ARE REQUIRED TO PROVIDE BACNET OVER IP/ETHERNET COMMUNICATION FOR CONNECTION TO U-M'S BAS SYSTEM. FOR RENOVATIONS, A MACROSERVER OR PXC MAY ALREADY EXIST THAT CAN BE UTILIZED FOR THE PROJECT. CONSULT WITH U-M PLANT ENGINEERING THROUGH THE DESIGN MANAGER TO DETERMINE, THEN EDIT THE NEXT PARAGRAPHS ACCORDINGLY.

a. Phoenix Controls Server: Provide Phoenix Controls RMI Room Integrator.
b. Siemens Server: Siemens model PXC100-E96.A BACnet IP controller with a PXC expansion module.
    1) Mount in a NEMA Type 1 metal control panel enclosure with removable door, right or left hand hinged, locking, with perforated subpanel, keyed to match other U-M control panels. Minimum size 19-1/2" x 16-3/8" x 5-3/4" deep. Provide 120 VAC service box, disconnect, power supply, UPS, and bus connection module. All components shall be in compliance with related articles of this specification.

BELOW PARAGRAPH INDICATES THAT NETWORK DEVICES SHOULD BE INSTALLED ABOVE LAB DOORS AND IN ELECTRICAL CLOSETS. DESIGNATE THE LOCATION OF THIS EQUIPMENT ON THE DRAWINGS. LAB CONTROL NETWORK EQUIPMENT SHOULD NOT BE INSTALLED IN BUILDING DATA CLOSETS DUE TO RESTRICTIONS ON THE PERSONNEL ALLOWED TO ACCESS DATA CLOSETS.

D. Install routers secured to a wall and mounted above the doors to labs, or where indicated.

1. Provide in a wall mounted metal enclosure, adequately ventilated to prevent overheating of the equipment, and separate from lab control power supply cabinets.
   a. Routers may be mounted in lab control power supply cabinets.
   b. Maximum cabinet projection from wall shall be 8 inches.

E. Install servers and server UPS in building electrical closets, or where indicated.

F. Label router and server cabinets "VAV Fume Hood Laboratory Controls Network" and with router/server tag number.

G. Provide communication cable types, connectors, termination devices, and other accessories recommended specifically for the lab control networks by the lab control manufacturer.

H. The Owner shall configure any BAS alarms, trending, or control commands at the BAS; LCC shall assist in trouble shooting the creation of such items for a period of one year after the final acceptance of the lab control system.

2.14 MISCELLANEOUS ELECTRICAL

A. Provide all wiring in conduit and J-hooks per Related Section Mechanical Systems Controls, except as noted below:

1. Wiring between occupancy sensors and lab controls shall be run in conduit at all locations.
2. J-hooks shall be painted bright white color.
3. Conduit fittings and junction box covers shall be painted bright white. Alternative: Allied Tube True Color® EMT, color white, may be used in lieu of painted fittings and junction boxes.

B. Provide 120 VAC wiring from receptacle panels to power supplies and to any other equipment associated with the laboratory airflow controls.

C. All electrical work shall conform to Related Sections Division 26 and Mechanical Systems Controls. Maintain all NEC clearances.

2.15 REHEAT COILS

A. Acceptable Manufacturers:

1. Trane, a business of Ingersoll Rand.
2. York by Johnson Controls.
3. McQuay International.
4. Aerofin.
5. Marlo DRS Technologies, Inc.
6. Coil Replacement Co.
7. Heatcraft Worldwide Refrigeration.
8. USA Coil & Air.

B. Provide coils factory-mounted to the LTAU, with capacities and characteristics as scheduled on the Drawings. Provide slip and drive or flanged connections to allow removal and reversal of coils in field.

C. Coils: Maximum of 10 fins per inch, minimum 2 rows, same side supply and return piping connections, enclosed in a sheet metal casing to match the size of the attached terminal airflow unit.

D. Coil Header and Connection Materials: Seamless copper with extruded tube holes to permit expansion and contraction without creating undue stress or strain. Copper connections.

E. Rated for 200 psi working pressure, 250 deg. F, with 3/8 inch copper tubing, minimum wall thickness of 0.016 inch, and mechanically bonded aluminum fins, 1/2 inch or larger solder connectors, and manual air vent on return. Hydrostatically test coils at 250 psi, or at 250 psi air pressure under water. Maximum pressure drop at design flow shall not exceed 10 feet or as scheduled. Hot water shall be equally distributed through all tubes by means of orifices or a header design.

PART 3 - EXECUTION

3.1 INSTALLATION

A. Install all components in strict compliance with component manufacturers' recommendations.

DESIGNER SHALL LAY OUT SHEET METAL DUCTWORK TO PROVIDE ONE STRAIGHT EQUIVALENT DUCT DIAMETER UPSTREAM OF THE INLET TO ALL LTAUS (REGARDLESS OF BASIS OF DESIGN MFR.).

B. Systems using air flow sensors (Siemens):

1. Provide one straight equivalent duct diameter upstream of the inlet to the LTAU. Transitions connecting to the inlet or outlet of the LTAU and associated reheat coils shall not exceed 30 degrees.

C. Install fume hood monitors surface mounted on the front of the fume hood. Furnish exact cut-out dimensions to the fume hood factory to allow for concealed wiring to the monitor.

D. Install the sash position sensors and sash travel limit brackets in a neat and workmanlike manner. Install cables and wires in a manner which avoids contact by the user during normal fume hood use, and allows horizontal and vertical sashes to be positioned in any combination without binding, twisting or tangling.

E. Terminate wiring at all devices.

F. No material shall be exposed if it is possible to conceal it. Exposed materials shall be installed only with consent of the Owner.

G. Installation shall also comply with Related Sections Mechanical Systems Controls and Division 26.

H. Install components so that they are easily accessible for service and in conformance with NEC clearance requirements.

DESIGNER: NOTE THE PARAGRAPH BELOW AND INCLUDE U-M STANDARD DETAIL "SUPPLY AIR LTAU CLEARANCE" ON THE DESIGN DRAWINGS.

I. Install LTAUs with proper NEC clearances at LTAU mounted controls, including at actuators.

3.2 SYSTEM START-UP

A. Program, start-up, calibrate, and test all laboratory controls.

B. Program, start-up, and test integration to the BAS system.

C. Adjust LTAU air volume to provide hood face velocity to within +/- 5% of required setpoint. Operate the lab controls to assist the TAB Contractor in verifying that correct airflow rates and alarm settings are within +/- 5% tolerance.

1. All adjustments to the LTAUs shall be done by the LCC, not the TAB contractor.
2. TAB contractor shall take flow readings to verify that the air flow volumetric flow rate indicated by the LTAU matches the measured air flow volume, and to assist in setting alarms. Assist the TAB contractor in verifying measured LTAU air flow against that reported by the LTAU controller, at design minimum and maximum CFM.
3. LTAU air flow shall not be adjusted based on field air flow measurements. If LTAU air flow verification indicates calibration is not within +/- 5% tolerance, do not field adjust. Notify Owner and return to factory for recalibration.

D. Unless indicated otherwise, set controls to maintain hood face velocities as follows:

1. VAV Hoods
   a. To maintain 100 fpm (standard hoods) and 70 FPM (Reduced Face Velocity Hoods) for the entire sash travel, for all vertical and horizontal sash positions. Note: The LTAU's capacity may be insufficient to maintain the required air flow velocity through the entire travel of the sash as it is raised above the sash stop. Do not "clamp" hood LTAU air flow, allow the LTAU to open as far as it can in an attempt to maintain face velocity, except limit travel to the extent necessary so that the room cannot become more negative than indicated; clamp valve if necessary to prevent room from going more negative.
      1) Hoods with Horizontal Sashes: Set controls to maintain the required face velocity with the sashes in the position that creates the maximum free area opening. Example:, If the sash has 4 horizontal sashes, the face velocity must be achieved with 2 sashes in the full open position (with the sash vertical position closed)

E. Set fume hood monitor alarms as follows:

1. Insufficient differential static pressure/air volume:
   a. Face velocity 80 FPM (standard hoods) or 60 FPM (Reduced Face Velocity Hoods.
   b. LTAU valve cone at maximum travel.
2. Sash above the sash stop position.
   a. Time delay to re-alarm after silence button pushed: 10 minutes.
   b. Alarm shall clear when sash returned to sash stop position or lower.

c. Floor mounted hoods: Alarm shall activate when any sash is above its sash stop position; time delay and alarm clear shall be same as above.

F. Set other control parameters/alarms to comply with the laboratory airflow control drawings.

3.3 COMMISSIONING

A. Perform the commissioning activities as outlined in the Division 01 Section Commissioning and other requirements of the Contract Documents.

B. Demonstrate that the laboratory controls perform per the sequence of operation and the design intent.

C. Demonstrate every fume hood monitor alarm set point.

D. Demonstrate that the laboratory control system communicates properly to the BAS system, including:

1. Every point specifically indicated on the drawings as to be monitored, logged, or controlled by the BAS.
2. For each pressure zone, a minimum of 10% of points. Specific points to be designated by the U-M Commissioning Authority (CxA).
3. If more than 20% of the demonstrated points fail to communicate correctly, demonstrate that every point on the system communicates correctly to the BAS

E. Demonstrate that UPS' support connected loads for the specified duration.

F. Perform other demonstrations as may be required by the CxA.

3.4 CLOSEOUT ACTIVITIES

A. Submit as-built documentation per article "Submittals". Obtain approval of as-built documentation prior to Owner training.

B. Provide on-site training to Owner's maintenance personnel. Familiarize personnel with location of LTAUs, controllers, system components, power supplies, and network devices. Review the control concept for each lab and room type.

END OF SECTION 230910

UNIVERSITY OF MICHIGAN
ARCHITECTURE, ENGINEERING AND CONSTRUCTION

ARCHITECTURE & ENGINEERING
326 East Hoover, Mail Stop B
Ann Arbor, MI 48109-1002
Phone: 734-764-3414
Fax: 734-936-3334

BuildingName
The Description of the Project
P00000000 0000

SPECIFICATION DIVISION 23

NUMBER SECTION DESCRIPTION

DIVISION 23
SECTION 230920 - LABORATORY AIRFLOW CONTROLS- ANALOG ELECTRONIC

END OF CONTENTS TABLE

DIVISION 23 HEATING, VENTILATING AND AIR CONDITIONING (HVAC)
SECTION 230920 - LABORATORY AIRFLOW CONTROLS-PNEUMATIC AND ANALOG ELECTRONIC

DECEMBER 2013: REVISED PART 1 TO MASTER SPEC TEMPLATE FORMAT. MOVED ITEMS IN PART 1 THAT BELONG IN PART 2. REVISED FUME HOOD MONITOR TO INCLUDE SASH ALARM, THE SAME AS REQUIRED FOR DDC LAB CONTROLS. REVISED 3.2 TO MATCH DDC LAB AIR FLOW CONTROLS SPEC. D. KARLE FOR HVAC MTT.

JUNE 2015: ADDED REQUIREMENT FOR VALVE CALIBRATION CERTIFICATE UNDER SUBMITTALS, ADDED POST SUBMITTALS ARTICLE. IMPROVED DESCRIPTION OF VALVE OPERATION UNDER 2.3.A TO REQUIRE THAT CHARACTERIZED VALVE POSITION BE THE PRIMARY MEANS OF ACHIEVING AIR VOLUME SETPOINT, ADDED THAT ADDITIONAL OR FEWER AIR VALVES ARE THE RESPONSIBILITY OF THE CONTRACTOR TO PROVIDE IF A MANUFACTURER OTHER THAN THE DESIGN BASIS IS SUPPLIED SINCE FLOW RANGE V. VALVE DIAMETER VARIES BETWEEN MFR.S, REQUIRED THAT +/- 5% VALVE ACCURACY BE OVER THE ENTIRE CATALOGED VOLUMETRIC OPERATING RANGE OF THE LTAU. STRENGTHENED REQUIREMENT THAT LTAU INDICATED AIR VOLUME NOT TO BE ADJUSTED BASED UPON FIELD MEASUREMENTS (ART. 3.2). D. KARLE PER HVAC MTT.

CAUTION: *ANALOG STYLE LTAUS TYPICALLY NOT AVAILABLE OR USED FOR CURRENT PROJECTS SO THIS SPECIFICATION SHOULD NOT NORMALLY BE USED, INSTEAD USE DDC VERSION (230910). IN THE UNUSUAL CONDITION THAT THIS SPEC IS USED, EDIT CAREFULLY TO MAKE PROJECT SPECIFIC.*

PART 1 - GENERAL

1.1 RELATED DOCUMENTS

INCLUDE PARAGRAPH 1.1.A AND B IN EVERY SPECIFICATION SECTION. EDIT RELATED SECTIONS 1.1.B TO MAKE IT PROJECT SPECIFIC.

A. Drawings and general provisions of the Contract, Standard General and Supplementary General Conditions, Division 01 Specification Sections, and other applicable Specification Sections, in particular the Related Sections listed below, apply to this Section.

CAREFULLY VERIFY, EDIT AND COORDINATE RELATED SECTIONS.

B. Related Sections:

1. Section 115313: Laboratory Chemical Fume Hoods
2. Section 233300: Air Duct Accessories and RGDs
3. Section 230900: Mechanical Systems Controls
4. Section 230593: Testing, Adjusting, and Balancing (TAB)
5. Division 26: Electrical

1.2 SUMMARY

A. Section Includes:

1. Laboratory Airflow Control (LAC) system, including controls for Laboratory Terminal Airflow Units (LTAUs), fume hoods, and other devices to control laboratory (or other specialized spaces) pressurization, temperature, and other functions as indicated.
2. Laboratory terminal airflow units.
3. Sound attenuators for LTAUs.

B. The Laboratory Controls Contractor shall be a direct Subcontractor to the Contractor.

1.3 REFERENCES

A. Abbreviations, Acronyms, Definitions (partial list)

1. Owner: The University of Michigan.
2. Laboratory: For the purposes of this specification, a broad designation for any space served by laboratory airflow controls.

1.4 DIVISION OF WORK

A. As it relates to the extent of responsibility for work within this specification section, "provide" shall mean the identified party both furnishes and installs such item(s). "Furnish" shall mean the identified party furnishes the item to the project site for installation by others.

***IMPORTANT**: DESIGNER SHALL CLEARLY DELINEATE ON THE PROJECT DRAWINGS WHICH SPACES ARE TO BE SERVED BY 230920 "LABORATORY AIRFLOW CONTROLS-DDC" (I.E. THIS SPECIFICATION) VERSUS 230900 "MECHANICAL SYSTEMS CONTROLS". MAKE A CLEAR DELINEATION ON THE CONTROL DRAWINGS. NORMALLY ANY SPACE UTILIZING LTAUS IS CONSIDERED LABORATORY CONTROL, BUT IN SOME CASES A SPACE MAY BE SERVED BY BOTH TYPES OF CONTROL (ANIMAL ROOMS ARE AN EXAMPLE WHERE THIS FREQUENTLY OCCURS). SUCH SPACES REQUIRE SPECIAL CARE TO INDICATE THE BOUNDARIES OF THE SPLIT.*

B. The Laboratory Controls Contractor (LCC) shall provide a complete LAC system as described in this specification.

1. Any space designated as a laboratory, served by LTAUs, or where indicated, shall be provided with a LAC system.
2. All items specified shall be provided by the LCC, including items specified in Related Sections, except where explicitly indicated otherwise.
3. The LCC shall be an installer authorized by the laboratory controls manufacturer.
4. Provide supervision and instruction to insure proper installation of all furnished laboratory control components.
5. Furnish and install all control wiring and pneumatic tubing related to laboratory controls, including interconnection tubing and wiring to thermostats, switches, etc. Temperature Control Contractor (TCC) shall provide and install the control air main tubing to the lab area to be used by the LCC. TCC shall also provide and install all room level control components, including thermostats, control valves (on LTAU reheats, fin tube, chilled beams, etc.), switches, etc.

6. Furnish and install differential pressure gauges at locations indicated on the drawings to indicate (visually) the room pressurization.

C. The LCC shall furnish LTAUs and LTAU sound attenuators to the mechanical contractor. The mechanical contractor shall install in the duct work.

D. The mechanical contractor shall provide reheat coils, duct transitions to connect to LTAUs/LTAU reheat coils, and all other components not specified in this specification section.

1.5 COORDINATION

A. Provide supervision and instruction to insure proper installation of all laboratory airflow components installed by others.

B. Coordinate work with Temperature Controls Contractor (TCC).

C. Coordinate work with Air Balancing Contractor.

D. Coordinate with Architectural Trades regarding location and exact dimensions of recessed components.

E. Provide controls and control wiring compatible with equipment provided by others and with existing equipment and controls.

F. Coordinate the installation of controls with the installation of other project equipment.

G. Ensure all control components are located and installed correctly so that the specified and intended performance and the sequence of operation is achieved, including components supplied and/or installed by others.

H. Coordinate with laboratory equipment suppliers (fume hoods, etc.) regarding cut-out dimensions for alarm monitors and to assure proper accommodation is made for the installation of sash sensors and other devices related to laboratory airflow controls.

1.6 ITEMIZED QUOTATION

A. The Laboratory Controls Contractor shall submit with bid, an itemized cost breakdown listing all major components, labor cost (including subcontractor labor and material cost), and engineering costs, for base bid and for each alternate, for the entire work scope of the Laboratory Controls. When requested, provide the itemized breakdown to the Owner post bid, for review and approval.

1.7 SUBMITTALS

A. Submit the following for approval:

1. A separate schematic drawing and wiring diagram for each laboratory room or zone, with sequence of operation. Indicate all set points and alarm settings.
2. Equipment schedule for each room or zone, with the following information:

a. Equipment tag, room served, occupied/unoccupied min., max., and offset CFM.
b. Model number of each LTAU and control component.
c. Function of each LTAU and control component.

3. Equipment data sheets indicating performance, wiring and tubing diagram, dimensions, weights, required clearances, component locations, and location and size of each field connection.
   a. Data sheets shall be organized behind sheet tabs. Each sheet tab shall indicate the category or component name (i.e. LTAUs, controllers, sensors, etc.)
4. Accuracy certificate, certified by an officer of the company, indicating that LTAU control error will not exceed +/- 5% of flow set point, over the manufacturer's cataloged volumetric operating range of the LTAU.
5. Ductwork connection types and sizes.
6. Wiring diagrams and locations of power supplies.
7. Conduit and wire/cable data sheets.
8. Octave band and A-weighted sound power data for each LTAU, with and without sound attenuators.
9. Installation, operation, and maintenance instructions for each component. Include calibration method, calibration tolerance, inspection period, and cleaning method.

1.8 CLOSE-OUT SUBMITTALS

A. Submit the following as a condition of final payment:

1. As-built schematic drawings and wiring diagrams. Indicate set points, settings and adjustments of all components.
2. Calibration certificate, signed by an officer of the company, indicating that each LTAU was factory calibrated at a minimum of 48 points and that the factory determined calibration data was loaded into the LTAU's respective controller. Indicate if calibration data was loaded into the LTAU controller at the factory or in the field.DELIVERY, STORAGE AND HANDLING

1.9 DELIVERY, STORAGE AND HANDLING

A. Mark each LTAU before factory shipment with a unique identifier corresponding to the LTAU drawing schedule.

B. Shipping and storage protection shall be provided by manufacturer to insure that the interior and exterior of components are completely protected from damage, dirt or weather. Components shall be continuously covered with plastic or other durable means, until just prior to installation. Maintain protection after installation to protect against on-going construction activities.

1.10 QUALITY ASSURANCE

A. Manufacturers and Products: The products and manufacturers specified in this Section establish the standard of quality for the Work. Subject to compliance with all requirements, provide specified products from the manufacturers named in Part 2.

B. Reference Standards: Products in this section shall be built, tested, and installed in compliance with the specified quality assurance standards; latest editions unless noted otherwise.

1. AMCA 610 Laboratory Method of Testing Airflow Measurement Stations for Performance Ratings.
2. AHRI 880 Performance Rating of Air Terminals.
3. NFPA 70 National Electric Code.
4. NFPA 90A Installation of Air-Conditioning and Ventilating Systems.
5. ASTM C916 Standard Specification for Adhesives for Duct Thermal Insulation.
6. ASTM E84 Standard Test Method for Surface Burning Characteristics of Building Materials
7. UL 916 Energy Management Equipment
8. Components shall be Underwriters Laboratories (UL) or Intertek (ETL) listed.

1.11 WARRANTY

A. Provide a complete parts and labor warranty for a minimum of 3 years from the date of Substantial Completion.

B. Provide 24 hour per day service during the warranty period, with a maximum response time from when service is requested of 4 hours.

PART 2 - PRODUCTS

2.1 MANUFACTURERS

A. Acceptable Laboratory Controls Manufacturers:

1. Phoenix Controls

2.2 GENERAL

A. All control components except for pneumatic actuators shall be strictly analog electronic in nature.

B. All laboratory airflow controls and laboratory terminal airflow unit system components shall be products of a single manufacturer.

2.3 FUME HOOD MONITORS AND CONTROLS

A. Monitors

1. Monitor shall include emergency exhaust control switch and LED (VAV hoods only), audible alarm, visual alarm, and alarm silence switch.
   a. VAV system - Phoenix FHM430 Controller
   b. CAV system - Phoenix FHM530 Controller
2. Normal operation and alarm conditions
   a. The fume hood monitor shall provide an alarm indication for the following conditions.
      1) Insufficient differential static pressure as detected by the exhaust airflow LTAU pressure switch.
      2) Signal loss between the exhaust airflow LTAU and the fume hood monitor(VAV hoods only).
      3) Sash raised above sash stop position.

b. When an alarm condition is detected, audible and visual alarm indicators shall activate. Pushing the alarm silence button shall mute the alarm for an adjustable time delay, initially set at 10 minutes. Alarm shall re-sound after the time delay, until alarm condition clears. Visual alarm shall remain lit until alarm conditions clears.
   1) Sash position shall be sensed by using a vertical sash position sensor. Vertical sash position sensor shall be as specified under the article "VAV Fume Hood Controls".

B. VAV Fume Hood Controls

1. The fume hood controller shall use a sash position sensor to measure sash opening to proportionally control the hood's exhaust airflow. Controller shall maintain an "average" constant face velocity to +/- 5% tolerance at all sash positions.
2. Signal
   a. The fume hood monitor shall receive the sash opening signals from the sash sensors. The monitor shall compute the total open sash area and then output an exhaust airflow control command signal to the appropriate exhaust airflow control device.
   b. Vertical Sash Sensor
      1) A vertical sash sensor shall be employed to measure the height of each vertically moving fume hood sash. The vertical sash sensor shall consist of a precision 10-turn potentiometer mechanically coupled to a constant tension spring reel. A stainless steel, vinyl coated cable shall be attached to the spring reel. Expected lifetime based on manufacturer's component data and tests shall be over 200,000 full height sash movements. Sash sensor shall be installed in an easily accessible location on the fume hood for service.
         a) Phoenix VSS
   c. Horizontal Sash Sensor
      1) A horizontal sash sensor shall be provided for each pair of horizontal or overlapping sashes that are located on horizontal, combination or walk-in sash fume hoods. The horizontal sash sensor shall consist of two long flat bars for each pair of overlapping sashes. The first bar shall contain a magnetic element to send magnetic flux to the second bar. The second bar shall contain a multitude of magnetic sensors spaced every .75" or less. The bars shall be mounted at the top of each sash, one per sash. As the two sashes slide past each other, the bars shall overlap to determine the total amount of sash opening.
         a) Phoenix HSS
   d. Combination Horizontal & Vertical Sash Sensor
      1) Provide the required combination of vertical and horizontal sash sensors as required by the types of fume hoods to be controlled.
         a) Phoenix CSS
3. Emergency Exhaust

a. An emergency exhaust capability shall be provided to override the sash sensor and command maximum exhaust airflow. A push-to-start, push-to-stop, push button switch shall initiate this mode.

4. The fume hood control system shall respond to a step change in sash position by reaching 90% of the final position CFM value within 3 seconds with no more than a 5% overshoot or undershoot and with no noticeable oscillation.

C. Mounting of Monitor

a. Fume hood monitor shall be suitable for surface or fully recessed mounting on the front of the fume hood.

2.4 LABORATORY TERMINAL AIRFLOW UNITS (LTAU)

A. Description

1. The laboratory terminal airflow unit (LTAU) shall be of venturi control type utilizing a cone shaped element. The position of the valve cone assembly shall be factory characterized to determine a position versus air flow volume relationship. Air flow control shall be achieved by moving the valve cone assembly to the factory characterized position that provides the required air volume. Air flow control shall not be achieved by air flow measurement. Control shall be pressure independent, accomplished by the cone/spring element continuously adjusting position relative to the venturi orifice to compensate for duct pressure fluctuations. All LTAUs shall have an equal percentage flow characteristic to provide stable control at low flow values. Butterfly, opposed blade, or parallel blade style damper or VAV boxes are not acceptable.

B. Accuracy

1. Total LTAU control error (including the combined effects of nonlinearity, hysteresis, repeatability, temperature and drift over a one year period) shall not exceed +/- 5% of flow set point. Example: If the LTAU's current flow set point is 1000 CFM, the volume of air delivered by the LTAU shall be within +/- 50 CFM of that set point. This error shall not be exceeded regardless of duct inlet or exit configurations, over the entire manufacturer’s cataloged volumetric operating range of the LTAU, and at any pressure drop across the LTAU from 0.3" WG to 3.0" WG static pressure..

C. Calibration

1. Every LTAU shall be factory calibrated across the manufacturer’s cataloged volumetric flow range using NIST traceable air flow stations and instrumentation with a combined accuracy of +/- 1 percent of signal over the entire range of measurement. Air flow shall be verified to be within an accuracy of +/- 5 percent of signal at a minimum of 48 different air flows. Provide factory calibration certificate for each valve, certified by an officer of the manufacturer.

D. Construction

EDITOR: IF VALVES OTHER THAN FUME HOOD VALVES (FOR EXAMPLE SNORKELS (THOUGH COATING IS NOT ALWAYS REQUIRED FOR SNORKELS)) NEED TO BE COATED VALVES, BE SURE TO INDICATE SO ON THE DRAWINGS.

1. LTAUs shall be constructed of heavy gauge aluminum. All bearing surfaces related to the control of airflow shall be made of Teflon or Teflon coated aluminum.
2. Supply air LTAUs shall come factory insulated with minimum 3/8" thick flexible closed cell polyethylene insulation with a flame/smoke rating not to exceed 25/50, K value not to exceed 0.270 btu-in/hr-ft^2-°F @ 75°F mean temperature, and a permeability maximum of 0.08 Dry Cup. Perm-In. Rubatex Therma-Cel, AP/Armaflex, or equivalent. Insulation shall be installed per mfg. recommendations using mfg. recommended adhesives and joint vapor barrier sealants.
3. LTAUs on fume hoods or as indicated on drawings shall be coated with at least two baked coats of Heresite P403 coating material. The shaft and other exposed metal parts shall be made of 316 stainless steel. Stainless steel shaft stall be Teflon coated.
4. LTAUs used on cage or rack washer equipment shall be coated with two coats on all surfaces, including body, cone, shaft and hardware. Coating shall be suitable to eliminate corrosion for each installation application.

E. Electronically Controlled LTAUs:

1. Description
   a. Valves shall be pressure independent and use closed loop control to regulate air volume linearly proportional to a 0-10 volt DC analog electronic control signal. Valves shall also generate a 0-10 volt DC feedback signal linearly proportional to valve airflow for internal volume control, monitoring, or airflow tracking control. Signal shall be factory calibrated using NIST traceable instrumentation.
2. Actuator
   a. A pneumatic actuator shall be factory mounted to the LTAU body to vary the position of the internal cone from its minimum to maximum flows. Provide electronic "stops" to set maximum and minimum controllable airflows. Loss of control signal or power shall cause the units to fail to the position indicated on drawings. Fail-in-last-position actuators are not acceptable.
3. Flow Measuring Devices
   a. No electronic (hot wire, thermistor, etc.) flow measuring devices may be used.
4. Power Supply to LTAU
   a. Unless power supply is integral to a wall mounted control panel, provide a unit mounted power supply and disconnect switch on same side of LTAU as controller for each LTAU.
5. Static Pressure Switch:
   a. Fume hood exhaust LTAUs shall include a unit-mounted static pressure switch to sense and alarm on a reduction in airflow below set point. The switch shall operate by measuring the pressure drop across the unit's orifice.

F. Pneumatically Controlled LTAUs:

1. Description

a. LTAUs shall be pressure independent and shall have two factory calibrated min/max flow set points in the form of mechanical stops. Valves shall reposition between min/max flow set points based on a switched 0 to 20 psi pneumatic signal. Where required, LTAU shall generate a 0 to 10 volt feedback signal linearly proportional to LTAU airflow. Signal shall be factory calibrated to a stated CFM per volt scale factor using NIST traceable instrumentation.

2. Actuator
   a. A pneumatic actuator shall be factory mounted to the unit body to vary the position of the internal cone from its minimum to maximum flows. Loss of pneumatic supply air shall cause the units to fail to the position indicated on the drawings. Fail-in-last-position actuators are not acceptable.
3. Flow Measuring Device
   a. No electronic (hot wire, thermistor, etc.) flow measuring devices may be used.

G. Constant Volume Airflow Control Valves:

1. Valve Description:
   a. Valve shall be pressure independent and shall maintain a constant volume set point. Valves shall be factory calibrated, NIST traceable and set for the desired airflow rate. Valves shall also be field adjustable to allow for future changes of airflow rate.

2.5 VAV FUME HOOD ROOM CONTROLLER

A. Make-up/supply air and exhaust air controller shall control the airflow balance of the laboratory. The controller shall be unit mounted or wall mounted, as indicated on drawings. If no indication is given on drawings, provide wall-mounted controller.

B. Controller shall maintain a constant offset (adjustable) between the sum of the room's total exhaust and the make-up/supply air volumes. This offset shall represent the volume of air that will transfer to or from the corridor or other adjacent rooms.

C. The controller shall generate signals linearly proportional to the airflow of each exhaust LTAU as indicated by the calibrated input signals. Similar outputs signals shall also be provided for the supply, other general exhaust (where appropriate), and total exhaust airflow volume signals.

D. An integral power supply for each wall-mounted controller shall power the complete laboratory airflow control system from one (1) 120 volt AC line connection. Provide a labeled disconnect switch at each 120 volt AC connection. Locate switch above ceiling.

2.6 ENHANCED TRACKING CONTROL SYSTEM

EDITOR: ENHANCED TRACKING CONTROL REQUIRES MORE EXPENSIVE VALVES FOR PHOENIX SYSTEMS (AND FOR PHOENIX IS TYPICALLY CHARACTERIZED BY "MAV" AND "EXV" VALVE COMBINATIONS) AND IS TYPICALLY USED ONLY IN VAV FUME HOOD APPLICATIONS OR WHERE THERE IS A HIGH

PROBABILITY VAV FUME HOODS WILL BE USED IN THE FUTURE. SINCE IT REQUIRES MORE EXPENSIVE PHOENIX VALVES IT SHOULD NOT BE INDISCRIMINATELY SPECIFIED BY THE DESIGNER OR ACCEPTED FROM PHOENIX.

A. Tracking controller shall control the operation of electronically controlled supply, exhaust, or return air LTAUs to provide proper room pressurization and airflow balance. Provide this system only when specifically indicated on the design drawings, and where VAV type fume hoods are indicated.

B. The tracking controller shall be unit mounted and shall accept one input signal (multiple sources summed as one input) and produce one output signal.

C. Tracking controller shall maintain a constant offset between the room's exhaust (return) and make-up/supply volumes. This offset shall be electronically adjustable.

D. It shall be possible to electronically scale and calibrate the input and output signals. Both the minimum and maximum value of the tracking airflow shall be separately adjustable.

2.7 STANDARD TRACKING CONTROL SYSTEM

EDITOR: STANDARD TRACKING CONTROL CAN BE USED FOR MOST APPLICATIONS AND FOR PHOENIX IS TYPICALLY CHARACTERIZED BY "BSV" AND "EXV" VALVE COMBINATIONS.

A. Tracking controller shall control the operation of supply, exhaust, or return air LTAUs to provide proper room pressurization and airflow balance. Provide this system unless specifically noted otherwise on the drawings. One LTAU within the system shall be electronically controlled; the other shall be pneumatically controlled with a feedback potentiometer.

B. The tracking controller shall be unit mounted and shall accept one input signal (multiple sources summed as one input) and produce one output signal.

C. Tracking controller shall maintain a constant offset between the room's exhaust (return) and make-up/supply volumes.

D. Both the minimum and maximum value of the tracking airflow shall be separately adjustable.

2.8 LABORATORY TERMINAL AIRFLOW UNIT SOUND ATTENUATOR

EDITOR: DESIGNER SHALL PROVIDE PERFORMANCE DATA FOR THE SOUND ATTENUATORS ON THE DRAWINGS. DESIGNER MUST SPECIFICALLY INDICATE WHERE ATTENUATORS ARE REQUIRED. DESIGNER SHALL REVISE SPEC SECTION REFERENCE BELOW, IF REQUIRED.

A. Sound attenuator shall be furnished by the LTAU manufacturer. Attenuator shall be properly matched to each individual LTAU to meet sound performance as scheduled. Provide packless type stainless steel attenuators for all fume hood and "wet" exhaust applications. Provide attenuators only where specifically indicated.

B. Refer to other Division 23 sections for additional attenuator specifications.

2.9 FUME HOOD CALIBRATION BLAST GATE

A. Refer to other Division 23 sections for specifications for the blast gate used for low flow alarm calibration.

2.10 HOOD OCCUPANCY SENSOR

A. Provide manufacturer' standard occupancy sensors when specifically indicated on the drawings.

2.11 DIFFERENTIAL PRESSURE GAUGE

A. Provide where indicated. Dwyer Series 2000 Dual Scale (-0.25" to 0.25" W.G.)

2.12 ELECTRICAL

A. Provide all necessary power supplies/control transformers, power distribution wiring, etc. for a complete operating system. This includes but is not limited to power supplies for lab airflow controls, sensors/transmitters, etc.

BELOW PARAGRAPH INDICATES THAT POWER SUPPLIES SHOULD BE INSTALLED ABOVE DOORS TO LABS. DESIGNATE THE LOCATION OF THIS EQUIPMENT ON THE DRAWINGS. WORK WITH ELECTRICAL ENGINEER TO DESIGNATE THE RECEPTACLE PANEL CIRCUITS TO FEED LAB CONTROL POWER SUPPLIES. DEPENDING ON LOAD, MULTIPLE POWER SUPPLIES MAY BE FED FROM A SINGLE 120 VAC CIRCUIT.

B. Install power supplies secured to a wall and mounted above the doors to labs, unless indicated otherwise. Utilize receptacle panel circuits designated for powering lab control power supplies.

C. Provide power supplies for lab airflow controls in NEMA 1, metal, adequately ventilated to prevent overheating of the equipment, with exterior labeled "Laboratory Airflow Controls Power Supply", and listing the room numbers served. Maximum cabinet projection from wall shall be 8 inches. Label each secondary circuit inside the cabinet with the room number(s) served.

1. Control transformers shall be rated NEC Class 2 and shall meet all the requirements and recommendations of the laboratory airflow controls manufacturer.
2. No more than five pressurization zones shall be served from a single control transformer. No control transformer shall exceed 500 VA.
3. Each pressurization zone shall be powered by a dedicated (isolated) secondary circuit. Each secondary circuit shall include a disconnect switch, "power on" indicator, and be current limited with a slow blow fuse or circuit breaker.
4. Provide a disconnect switch, with shielded terminations, for line side power (one per control transformer). Locate inside the power supply enclosure.

D. Conduit fittings and junction box covers shall be painted bright orange.

PART 3 - EXECUTION

3.1 INSTALLATION

A. Install all components in strict compliance with component manufacturers' recommendations.

B. Install fume hood monitors surface mounted on the front of the fume hood. Furnish exact cut-out dimensions to the fume hood factory to allow for concealed wiring to the monitor..

C. Install the sash position sensors and sash travel limit brackets in a neat and workmanlike manner. Install cables and wires in a manner which avoids contact by the user during normal fume hood use, and which allows both the horizontal and vertical sashes to be opened and closed in any combination without binding, twisting or tangling.

D. Terminate wiring at all devices.

E. No material shall be exposed if it is possible to conceal it. Exposed materials shall be installed only with consent of the Owner. Installation shall also comply with Related Sections Mechanical Systems Controls and Division 26.

F. Install components so that they are easily accessible for service and in conformance with NEC clearance requirements.

DESIGNER: NOTE THE PARAGRAPH BELOW AND INCLUDE U-M STANDARD DETAIL "SUPPLY AIR LTAU CLEARANCE" ON THE DESIGN DRAWINGS.

G. Install LTAUs with proper NEC clearances at LTAU mounted controls.

3.2 SYSTEM START-UP

A. Program, start-up, calibrate, and test all laboratory airflow controls.

B. Adjust LTAU air volume to provide hood face velocity to within +/- 5% of required setpoint. Operate the lab airflow controls to assist the TAB Contractor in verifying that correct airflow rates and alarm settings are within +/- 5% tolerance.

1. All adjustments to the LTAUs shall be done by the LCC, not the TAB contractor.
2. TAB contractor shall take flow readings to verify that the air flow volumetric flow rate indicated by the LTAU matches the measured air flow volume, and to assist in setting alarms. Assist the TAB contractor in verifying measured LTAU air flow against that reported by the LTAU controller, at design minimum and maximum CFM.
3. LTAU air flow shall not be adjusted based on field air flow measurements. If LTAU air flow verification indicates calibration is not within +/- 5% tolerance, do not field adjust. Notify Owner and return to factory for recalibration.

C. Unless indicated otherwise, set controls to maintain hood face velocities as follows:

1. VAV Hoods
    a. To maintain 100 fpm (standard hoods) and 70 FPM (Reduced Face Velocity Hoods) for the entire sash travel, for all vertical and horizontal sash positions. Note: The LTAU's capacity may be insufficient to maintain the required air flow velocity through the entire travel of the sash as it is raised above the sash stop. Do not "clamp" hood LTAU air flow, allow the LTAU to open as far as it can in an attempt to maintain face velocity, except limit travel to the extent necessary so that the room cannot become more negative than indicated; clamp valve if necessary to prevent room from going more negative.
        1) Hoods with Horizontal Sashes: Set controls to maintain the required face velocity with the sashes in the position that creates the maximum free area opening. Example:, If the sash has 4 horizontal sashes, the face velocity must be achieved with 2 sashes in the full open position (with the sash vertical position closed)
2. CAV Hoods
    a. To maintain 100 fpm (standard hoods) and 70 FPM (Reduced Face Velocity Hoods) at sash stop position.

D. Set fume hood monitor alarms as follows:

1. Insufficient differential static pressure/air volume:
    a. Face velocity 80 FPM (standard hoods) or 60 FPM (Reduced Face Velocity Hoods.
    b. LTAU valve cone at maximum travel (VAV hoods).
2. Sash above the sash stop position.
    a. Time delay to re-alarm after silence button pushed: 10 minutes.
    b. Alarm shall clear when sash returned to sash stop position or lower.
    c. Floor mounted hoods: Alarm shall activate when any sash is above its sash stop position; time delay and alarm clear shall be same as above.

E. Set other control parameters/alarms to comply with the laboratory airflow control drawings.

3.3 COMMISSIONING

A. Perform the commissioning activities as outlined in the Division 01 Section Commissioning and other requirements of the Contract Documents..

B. Demonstrate that the laboratory controls perform per the sequence of operation and the design intent..

C. Demonstrate every fume hood monitor alarm set point.

D. Perform other demonstrations as may be required by the CxA.

3.4 CLOSEOUT ACTIVITIES

A. Submit as-built documentation per article "Submittals". Obtain approval of as-built documentation prior to Owner training.

B. Provide on-site training to Owner's maintenance personnel. Familiarize personnel with location of LTAUs, controllers, system components, power supplies, and network devices. Review the control concept for each lab and room type.

END OF SECTION 230920

UNIVERSITY OF MICHIGAN
ARCHITECTURE, ENGINEERING AND CONSTRUCTION

ARCHITECTURE & ENGINEERING
326 East Hoover, Mail Stop B
Ann Arbor, MI 48109-1002
Phone: 734-764-3414
Fax: 734-936-3334

BuildingName
The Description of the Project
P00000000 0000

SPECIFICATION DIVISION 23

NUMBER SECTION DESCRIPTION

230930
SECTION 230930 – REFRIGERANT DETECTION AND ALARM

END OF CONTENTS TABLE

DIVISION 23
SECTION 230930 – REFRIGERANT DETECTION AND ALARM

REMOVED THE STATEMENT THAT U-M PROVIDES THE REFRIGERANT MONITOR AND CALIBRATES IT. PART 1 UPDATED TO THE CURRENT U-M MASTER SPEC FORMATTING TEMPLATE. PART 2 UPDATED TO PROVIDE TECHNICAL DETAIL ON REFRIGERANT MONITORS. PART 3 UPDATED TO REQUIRE FINAL SETUP AND CALIBRATION OF MONITOR BY A FACTORY SERVICE REP. D. KARLE FOR HVAC MTT OCT. 2014

AUGUST 2015: REVISED TO DELETE HORNS, LIGHTS, TUBING, WHICH WILL NOW BE PROVIDED BY THE MECHANICAL SYSTEMS CONTROLS CONTRACTOR (MSCC). REVISED TO DELETE CHILLGARD MODEL LE BECAUSE OR ONGOING RELIABILITY ISSUES REPORTED BY PLANT. D.KARLE FOR STEAM/HYDRONICS MTT.

PART 1 - GENERAL

1.1 RELATED DOCUMENTS

A. Drawings and general provisions of the Contract, including Standard General Conditions, Supplemental General Conditions, Division 01 Specification Sections, and other applicable Specification Sections, apply to this Section.

B. Related Sections:

1. Section 018113 - Sustainable Design Requirements
2. Section 019110/019100 - Commissioning
3. Section 221113 - Piping Materials and Methods
4. Section 220500 - Common Work Results for Mechanical
5. Section 230900 – Mechanical Systems Controls
6. Division 26: - Electrical.

1.2 SUMMARY

A. Refrigerant monitor/controller and accessories for detecting refrigerant leaks, controlling equipment, and providing local and remote alarms.

1.3 SUBMITTALS

A. Product Data: Include manufacturer, catalog illustrations, model, rated capacities, performance, dimensions, component sizes, rough-in requirements, materials of construction, and operating and maintenance clearance requirements. Additionally include::

1. Project specific wiring diagram indicating inputs and outputs to the refrigerant monitor/controller.
2. Installation, operation, and maintenance instructions for all devices.

1.4 QUALITY ASSURANCE

A. Manufacturers and Products: The products and manufacturers specified in this Section establish the standard of quality for the Work. Subject to compliance with all requirements, provide specified products from the manufacturers named in Part 2.

B. Reference Standards: Products in this section shall be built, tested, and installed in compliance with the specified quality assurance standards; latest editions, unless noted otherwise.

1. Michigan Mechanical Code.
2. ASHRAE Standard 15: Safety Standard for Refrigeration Systems (ANSI Approved).
3. ASHRAE Standard 34: Designation and Classification of Refrigerants.
4. UL 2075: UL Standard for Safety Gas and Vapor Detectors and sensors.

1.5 DELIVERY, STORAGE, AND HANDLING

A. Store materials and accessories raised off the floor or ground on pallets and protected with coverings to prevent damage or contamination due to weather and construction activities. Provide temporary protective caps on pipe or tubing ends. Store in areas that prevent damage due to freezing and extreme temperatures or sunlight. Protect from damage, dirt and debris at all times.

1.6 WARRANTY

A. Provide a complete parts and labor warranty for a minimum of one year from the date of Substantial Completion.

PART 2 - PRODUCTS

DESIGNER TO PROVIDE REFRIGERANT DETECTION, ALARM, AND VENTILATION SYSTEM THAT COMPLIES WITH ASHRAE STANDARD 15 AND THE BUILDING CODE.

INDICATE ON THE DESIGN DRAWINGS THE NUMBER AND LOCATION OF WARNING HORNS AND LIGHTS THAT ARE ACTIVATED WHEN A REFRIGERANT LEAK IS DETECTED, AND THE NUMBER AND LOCATION OF SAMPLE POINTS.

PROVIDE A CONTROL DRAWING INDICATING THAT THE REFRIGERANT MONITOR PLACES THE MACHINERY ROOM INTO THE CODE REQUIRED VENTILATION MODE UPON DETECTION OF A REFRIGERANT LEAK. USE U-M STANDARD DETAIL D15635001 "REFRIGERANT MONITOR CONTROL DIAGRAM" (FUTURE NUMBER D230930001) FOR THIS PURPOSE, REVISED TO BE PROJECT SPECIFIC AND TO INDICATE THE REFRIGERANT TYPE(S) TO BE MONITORED ALONG WITH THE CORRESPONDING ALARM SET POINTS. THE LOW ALARM SET POINT SHALL BE 1/10 THE OEL, THE HIGH ALARM SET POINT SHALL BE 1/2 THE OEL, WHICH ARE LISTED IN CHAPTER 11 OF THE MICHIGAN MECHANICAL CODE, EXCEPT R123 SHALL BE SET FOR ≥ 30 PPM (LOW) AND ≥ 50 PPM (HIGH).

2.1 REFRIGERANT MONITOR (CHILLGARD-RT)

A. Provide Chillgard RT photoacoustic infrared technology refrigerant monitor and controller by MSA, capable of detecting the refrigerant types in the machinery room.

1. Minimum detection limit: ±1 ppm
2. Accuracy: 0-50 ppm, ±1 ppm; 51-1000 ppm, ±10% of reading
3. 4-20mA isolated output indicating refrigerant concentration
4. Manual alarm reset
5. Capable of sensing the number of locations indicated on the design documents.
6. With alarm beacon and horn mounted on the monitor cabinet.
7. Capable of sampling up to 500 feet with 3/16” I.D. copper tube.
8. Provide end of line sample tube filters, quantity to match the number of sensing locations indicated.
9. 120 VAC power supply

B. Provide remote relay modules and a multipoint sequencer, as required to accomplish the design intent expressed in the contract documents. At minimum provide outputs to provide the following functionality:

1. A low alarm which activates by latching a normally open Form C contact.
2. A high alarm which activates by latching a normally open Form C contact.
3. A refrigerant monitor fault alarm, which de-energizes a normally closed contact to indicate there is problem with the refrigerant monitor system. The same contact shall de-energize upon a loss of power to the monitor.
4. A reset switch that resets the high and low alarm states if the condition that caused the alarm has abated.

PART 3 - EXECUTION

3.1 INSTALLATION

A. Installation shall comply with the refrigerant monitor manufacturer's recommendations and the contract documents.

3.2 FIELD QUALITY CONTROL

A. Provide a factory trained service technician to perform start-up services. The service technician shall perform the following:

1. Verify correct installation of the monitor.
2. Perform set-up and calibration of the monitor. Calibrate monitor using a NIST traceable test mixture, and demonstrate an error of no larger than plus or minus 5 PPM. Attach a calibration sticker on the monitor listing date of calibration and calibration details.
3. Participate in the commissioning of the refrigerant monitor system.
4. Provide a written service report prepared on site and submitted at the time of the service visit (with copies immediately provided to the Owner and Commissioner). Report shall indicate services provided and list all controller settings and alarm setpoints.

3.3 COMMISSIONING

A. Perform the commissioning activities as outlined in the Division 1 Section titled Commissioning and other requirements of the Contract Documents.

END OF SECTION 230930

UNIVERSITY OF MICHIGAN
ARCHITECTURE, ENGINEERING AND CONSTRUCTION

ARCHITECTURE & ENGINEERING
326 East Hoover, Mail Stop B
Ann Arbor, MI 48109-1002
Phone: 734-764-3414
Fax: 734-936-3334

BuildingName
The Description of the Project
P00000000 0000

SPECIFICATION DIVISION 23

NUMBER SECTION DESCRIPTION

DIVISION 23 HEATING, VENTILATING AND AIR CONDITIONING (HVAC)
SECTION 231113 - FUEL OIL SYSTEMS

END OF CONTENTS TABLE

DIVISION 23 HEATING, VENTILATING AND AIR CONDITIONING (HVAC)
SECTION 231113 - FUEL OIL SYSTEMS

REVISIONS:

PART 1 - GENERAL

1.1 RELATED DOCUMENTS

INCLUDE PARAGRAPH 1.1.A AND B IN EVERY SPECIFICATION SECTION. EDIT RELATED SECTIONS 1.1.B TO MAKE IT PROJECT SPECIFIC.

A. Drawings and general provisions of the Contract, Standard General and Supplementary General Conditions, Division 1 Specification Sections, and other applicable Specification Sections including the Related Sections listed below, apply to this Section.

1.2 SCOPE OF WORK:

A. This Section includes fuel oil piping system and equipment, including:

1. Piping, fittings, and specialties.
2. Oil transfer equipment.
3. Oil storage tanks and accessories.

SPEC EDITOR: LIST ONLY MATERIALS IN THIS PROJECT WHICH THE READER MAY EXPECT TO FIND IN THIS SECTION. VERIFY THAT LISTED SECTIONS ARE INCLUDED IN THIS PROJECT SPECIFICATION AND THAT THEIR TITLES ARE CORRECTLY INDICATED HERE.

1.3 DEFINITIONS

A. Pipe sizes used in this Specification are Nominal Pipe Size (NPS).

1.4 QUALITY ASSURANCE

A. Qualify welding processes and welding operators in accordance with ASME "Boiler and Pressure Vessel Code," Section IX, "Welding and Brazing Qualifications."

B. Regulatory Requirements: Comply with provisions of the following codes:

1. NFPA 31 - Standard for the Installation of Oil Burning Equipment, for oil piping materials and components, oil piping installations, and inspection, and testing of fuel oil piping systems.

SPEC EDITOR: MODIFY BELOW BY SUBSTITUTING PLUMBING CODE ENFORCED BY THE AUTHORITY HAVING JURISDICTION. INSERT THE EDITION IN FORCE.

2. BOCA Basic National Mechanical Code.

C. UL Compliance: Provide fuel oil piping components and storage tanks which are listed and labeled by UL.

1.5 SEQUENCING AND SCHEDULING

A. Coordinate the size and location of concrete ballast pads and fill and sounding boxes for underground storage tanks, and housekeeping equipment pads for oil transfer pumps. Cast anchor bolt inserts into pad. Concrete reinforcement and formwork requirements are specified in Division 3.

1.6 WARRANTY

SPEC EDITOR: BE CAUTIOUS NOT TO REDUCE THE PROTECTION THE OWNER MIGHT OTHERWISE BE ENTITLED TO, BY INCLUDING UNINFORMED REQUIREMENTS FOR WARRANTIES. SEE EVALUATIONS AND DIVISION 1 SECTION "WARRANTIES AND BONDS."

SPEC EDITOR: RETAIN THIS ARTICLE WHEN SPECIFYING STEEL TANKS WITH STI-P3 CATHODICALLY PROTECTED TANKS.

A. Special Product Warranty: Submit a written warranty for the underground fuel oil storage tanks, executed by the manufacturer, agreeing, at the manufacturer's option, to repair the failure, replace the failed tanks limited to delivery of new tank to the site of original installation, or refund the original purchase price of the tanks, provided the tanks are installed in accordance with the manufacturer's instructions. Warranty shall protect the Owner for a period of 30 years from the date of original purchase, against structural failures of the tanks, including cracking, breakup, or collapse; and failure of the tanks due to external corrosion, and internal corrosion when the tanks are used for storage of fuel oils at temperatures not exceeding 150 deg. F. This warranty shall be in addition to, and not a limitation of, other rights the Owner may have against the Contractor under the Contract Documents.

SPEC EDITOR: USE THE ARTICLE BELOW WHEN SPECIFYING GLASS-FIBER REINFORCED PLASTIC TANKS.

B. Special Project Warranty: Submit a written warranty for the underground fuel oil storage tanks, executed by the manufacturer, agreeing, at the manufacturer's option, to repair the failure, replace the failed tanks limited to delivery of new tank to the site of original installation, or refund the original purchase price of the tanks, provided the tanks are installed in accordance with the manufacturer's instructions. Warranty shall protect the Owner for a period of 30 years from the date of original purchase, against failure of the tanks due to external corrosion, and internal corrosion when the tanks are used for storage of fuel oils at temperatures not exceeding 150 deg. F. This warranty shall be in addition to, and not a limitation of, other rights the Owner may have against the Contractor under the Contract Documents.

PART 2 - PRODUCTS

2.1 MANUFACTURERS

A. Vertical Ball Check Valves:

1. Keystone
2. Milwaukee
3. Grinnell
4. APCO
5. Crane
6. Stockham

B. Strainers:

1. Armstrong Machine Works.
2. Hoffman Specialty ITT; Fluid Handling Div.
3. Metraflex Co.
4. R-P&C Valve; Div. White Consolidated Industries, Inc.
5. Spirax Sarco.
6. Trane Co.
7. Victaulic Co. of America. (low pressure applications only)
8. Watts Regulator Co.

C. Oil Transfer Pumps:

1. ITT Marlow.
2. Roper Pump Co.
3. Viking Pump Div.; Houdaille Industries, Inc.
4. Webster Electric Co; Sub. of Sta-Rite Industries, Inc.

D. Oil Piping Specialties:

1. McDonald Mfg. Co., A.Y.
2. OPW Division; Dover Corp.

E. Steel Underground Oil Storage Tanks:

1. Adamson Co., Inc.
2. Buffalo Tank, Div. Bethlehem Steel Corp.
3. Highland Tank & Mfg. Co.
4. Modern Welding Co., Inc.

F. Glass Fiber Reinforced Plastic Underground Oil Storage Tanks:

1. Lifetime Fiberglass Tank Co.
2. Owens-Corning Fiberglas Corp.
3. Xerxes Fiberglass Inc.

2.2 PIPE AND TUBE MATERIALS

SPEC EDITOR: SELECT ONE - ANNEALLED COPPER IS NOT TO BE USED INDOORS.

A. Steel Pipe: ASTM A 120, Schedule 40, seamless, black steel pipe, with beveled ends, with threaded joints and fittings for 2 inch and smaller, and with welded joints for 2-1/2 inch and larger.

B. Copper Tubing: ASTM B 88, Type L, hard drawn copper tubing with wrought copper fittings and brazed joints for 2 inch and smaller, above ground, within building. Use Type K, annealed copper tubing for 2 inch and smaller without joints, for underground installations.

2.3 FITTINGS

SPEC EDITOR: FITTINGS BELOW ARE ALSO AVAILABLE IN CLASS 250.

A. Cast-Iron Threaded Fittings: ANSI B16.4, Class 125, standard pattern, for threaded joints. Threads shall conform to ANSI B1.20.1.

SPEC EDITOR: FITTINGS BELOW ARE ALSO AVAILABLE IN CLASS 300.

B. Malleable Iron Threaded Fittings: ANSI B16.3, Class 150, standard pattern, for threaded joints. Threads shall conform to ANSI B1.20.1.

C. Steel Fittings: ASTM A 234, seamless or welded, for welded joints.

D. Wrought-Copper Fittings: ANSI B16.22, streamlined pattern.

SPEC EDITOR: FLANGES BELOW ARE ALSO AVAILABLE IN CLASS 250.

E. Cast-Iron Threaded Flanges: ANSI B16.1, Class 125; raised ground face, bolt holes spot faced. Threads shall conform to ANSI B1.20.1.

SPEC EDITOR: BELOW FLANGES AND FITTINGS ARE AVAILABLE IN SEVERAL CLASSES, MATERIALS, FACINGS, AND END CONNECTIONS. VERIFY WITH PROJECT REQUIREMENTS.

F. Steel Flanges and Flanged Fittings: ANSI B16.5, including bolts, nuts, and gaskets of the following material group, end connection and facing:

1. Material Group: 1.1.
2. End Connections: Butt Welding.
3. Facings: Raised face.

2.4 JOINING MATERIALS

A. Brazing Filler Metals: AWS A5.8, Classification BAg1 (silver).

B. Gaskets for Flanged Joints: Gasket material shall be full-faced for cast-iron flanges and raised-face for steel flanges. Select materials to suit the service of the piping system in which installed and which conform to their respective ANSI Standard (A21.11, B16.20, or B16.21). Provide materials that will not be detrimentally affected by the chemical and thermal conditions of the fluid being carried.

2.5 PIPING SPECIALTIES

A. Y-Pattern Strainers: 125 psig working pressure; cast-iron body conforming to ASTM A 126, Class B; flanged ends for 2-1/2 inch and larger, threaded connections for 2 inch and smaller, bolted cover, perforated stainless steel screen, and plugged blow-down drain.

SPEC EDITOR: THE FOLLOWING ARE FOR 1-1/2 INCH PIPE AND SMALLER.

B. Flexible Connectors: minimum 150 psig working pressure, maximum 250 deg F operating temperature; stainless steel bellows with woven flexible bronze wire reinforcing protective jacket. Connectors shall have flanged or threaded end connections to match equipment connected; and shall be capable of 3/4 inch misalignment.

2.6 GENERAL DUTY VALVES

A. General duty valves (i.e., gate, globe, ball, and butterfly valves) are specified in Division 22 Section " Valves". Special duty valves are specified in this Article by their generic name. Refer to Part 3 below, Article "VALVE APPLICATION" for specific uses and applications for each valve specified.

2.7 SPECIAL DUTY VALVES

SPEC EDITOR: INTEGRAL RELIEF VALVE ON OIL TRANSFER PUMP MAY BE SUFFICIENT TO ELIMINATE INLINE SAFETY RELIEF VALVES.

A. Oil Safety Valves: 250 psig maximum working pressure, 550 deg. F. maximum operation temperature; ASTM B 61 bronze body and bronze bases and discs, and field adjustable cadmium-plated carbon steel springs factory-set at 20 percent above operating pressure. End connections shall be inside threaded with threads conforming to ANSI B1.20.1. Valve shall be UL-listed for flammable or volatile liquids.

B. Vertical Ball Check Valves: Class 200, 400 psig maximum operating pressure, 2-piece bronze construction with threaded end connections; integral bronze seats and replaceable stainless steel ball.

2.8 FUEL OIL TRANSFER PUMPS AND ACCESSORIES

SPEC EDITOR: CAPACITY IN GPM MAY BE PRESENTED IN A SCHEDULE IF THERE ARE SEVERAL PUMPS WITH VARIOUS CAPACITIES, OR MAY BE SPECIFIED HERE. ALSO AVAILABLE WITH FLANGE MOUNTING MANY OPTIONAL FEATURES AVAILABLE TO SUIT UNIQUE PROJECT REQMTS, CONSULT MFR LITERATURE.

A. General Description: single-stage, positive displacement rotary type, with the following features and accessories; foot-mounted, cast-iron housing, steel gears, bronze bearings, steel shaft, standard mechanical seals; built-in pressure relief bypass; steel base; and drive coupling. Provide pumps with capacities and electrical characteristics as scheduled for number 2 or 3 fuel oil. Pumps shall be constructed in accordance with UL 343, and be UL-listed and bear the UL label.

SPEC EDITOR: SELECT FROM THE FOLLOWING 2 DRIVE OPTIONS.

B. Drive: V-belt drive, with belt guard.

C. Drive: direct drive, close coupled.

D. Motor: Split phase for single-phase motors; capacitor-start, induction-run, totally enclosed for 3-phase motors.

2.9 STEEL UNDERGROUND STORAGE TANKS AND ACCESSORIES

SPEC EDITOR: SELECT ONE OF 2 OPTIONS BELOW. INDICATE SIZE AND CAPACITY ON THE DRAWINGS.

A. General Description: single-wall factory-fabricated and tested, cathodically-protected, and bearing UL and sti-P3 labels. Fabricate wall and headers using hot-rolled carbon steel plates or sheets, as specified in UL 58. Size and capacity as indicated.

B. General Description: double-wall, factory-fabricated and tested, cathodically-protected, and bearing UL and sti-P3 labels. Fabricate inner and outer walls and headers using hot-rolled carbon steel sheets or plates, as specified in UL 58. Size and capacity as indicated.

C. Fabrication: Tanks shall be fabricated for operation at atmospheric pressure; to store liquids with specific gravities up to 1.1, and with maintained temperatures of up to 150 deg. F. Fabricate shell and head joints, lifting lugs, manholes, masonry supports, and pipe connections in accordance with UL 58. Fabricate tanks for the following internal and external loads:

1. External Hydrostatic Pressure: 3'-0" depth of bury from top of tank and hole fully flooded; withstand general buckling with safety factor of 2:1.
2. Surface Loads: H-20 axle loads when installed in accordance with manufacturer's installation instructions.

D. Tank Fittings and Accessories: Provide storage tank with the following factory-installed fittings and accessories:

SPEC EDITOR: INCLUDE TANK DETAILS ON DRAWINGS INDICATING LOCATION OF FITTINGS. FLANGED FITTINGS ARE ALSO AVAILABLE.

1. Tank Manhole: 24 inch diameter, bolted, flanged, and gasketed manhole, with extension collar, for access to inside of tank.
2. Threaded pipe connection fittings on top of tanks, for fill, supply, return, vent, gages, heating coils, and hot-well in locations and of sizes as indicated. Provide cast-iron plugs for shipping.

3. Anchor Straps: Provide manufacturer's standard anchoring system (straps, cables, turnbuckles, etc.) with the strength of at least 1-1/2 times the maximum uplift force of the empty tank without backfill in place.
4. Lifting Lugs: Provide lifting lugs to facilitate handling and installation.

SPEC EDITOR: IF PARAGRAPH BELOW IS RETAINED, INDICATE LADDER LOCATION ON TANK DETAIL ON DRAWINGS.

5. Ladders: Provide carbon steel ladder inside tank, anchored to top and bottom, and located as indicated.
6. Masonry Supports: (2) 6" x 6" x 3/8" steel angles 6' - 0" long located longitudinally on each side of the manhole and continuously welded in place.

SPEC EDITOR: SELECT FROM 2 OPTIONS BELOW, BUT ONLY FOR HEAVY OIL STORAGE TANKS. HOT-WELLS ARE USED IN SOME AREAS IN LIEU OF HEATING COILS FOR HEAVY OIL. EDIT AS DESIRED. SCHEDULE HEATING CAPACITY OR INDICATE ON DRAWINGS.

7. Heating Coils: Provide heating capacity as scheduled. Coils shall be continuous spiral having a 3 inch slope, made of Type K soft annealed copper with no joints within the tank.
8. Hot-Wells: Provide 8 inch diameter hot-well extending from 4 inch above tank top to 4 inch above tank bottom. Provide tappings above tank for connection of oil suction and return piping. Provide 2 inch hole in well, just below top of tank, for venting.
9. Supply Tube: Provide extension of transfer pump suction line fitting into tank, terminating 6 inch above tank bottom and cut at 45 degree angle.
10. Vent Cap: cast iron threaded tee inlet; 40 mesh brass wire cloth screen.
11. Fill Box: Flush heavy duty, waterproof, cast iron body and top cap, and brass inner cap with lock with key wrench.
12. Remote Oil Gages: Balanced hydraulic type providing a true volumetric indication. Gage volume range to suit capacity storage; UL-listed and labeled.

SPEC EDITOR: RETAIN ONLY ONE OF THE 3 PARAGRAPHS BELOW, DEPENDING UPON REQUIREMENTS WITHIN YOUR LOCAL AREA. AUTHORITY HAVING JURISDICTION MAY WAIVE THE REQUIREMENTS FOR CORROSION PROTECTION WHERE EVIDENCE IS PROVIDED THAT SUCH PROTECTION IS NOT NECESSARY.

E. Corrosion Protection System: Tanks and their piping shall be protected by a properly engineered, installed, and maintained corrosion protection system in accordance with the Steel Tank Institute of Standard No. sti-P3 "System for External Corrosion Protection of Underground Steel Storage Tanks." Provide means monitoring cathodic protection by either "Protection Prover 1" or "Protection Prover 2" monitoring system.

2.10 SOURCE QUALITY CONTROL

A. Perform tests at the factory after fabricating and prior to shipment in accordance with sti-P3.

2.11 GLASS-FIBER-REINFORCED POLYESTER UNDERGROUND STORAGE TANKS

A. General Description: double-wall factory-fabricated and tested, in conformance with ASTM D 4021; bearing UL label. Tanks shall be designed to be vented and operated at atmospheric pressure; designed to store liquids with specific gravities up to 1.1, and with maintained temperatures of up to 150 deg F; and shall be chemically inert to petroleum being stored, plus their additives.

SPEC EDITOR: COORDINATE ELECTRICAL CONNECTIONS.

B. Hydrostatic Monitoring System: Include a brine antifreeze solution, UL listed reservoir sensor, and UL listed electronic control panel to monitor leaks in inner and outer tank walls. Controls shall operate with 120 volts A.C.

C. Tank Fittings and Accessories: Provide storage tank with the following factory-installed fittings and accessories:

SPEC EDITOR: INCLUDE TANK DETAILS ON DRAWINGS INDICATING LOCATION OF FITTINGS. FLANGED FITTINGS ARE ALSO AVAILABLE.

1. Tank Manhole: 24 inch diameter, bolted, flanged, and gasketed manhole, with extension collar, for access to inside of tank.
2. Threaded pipe connection fittings on top of tanks, for fill, supply, return, vent, gages, heating coils, and hot-well in locations and of sizes as indicated. Provide cast-iron plugs for shipping.
3. Anchor Straps: Provide manufacturer's standard anchoring system (straps, cables, turnbuckles, etc.) with the strength of at least 1-1/2 times the maximum uplift force of the empty tank without backfill in place.
4. Lifting Lugs: Provide lifting lugs to facilitate handling and installation.

SPEC EDITOR: IF BELOW IS RETAINED, INDICATE LADDER LOCATION ON TANK DETAIL ON DRAWINGS.

5. Ladders: Provide carbon steel ladder inside tank, anchored to top and bottom, and located as indicated.

SSPEC EDITOR: ELECT FROM 2 OPTIONS BELOW, BUT ONLY FOR HEAVY OIL STORAGE TANKS. HOT-WELLS ARE USED IN SOME AREAS IN LIEU OF HEATING COILS FOR HEAVY OIL. EDIT AS DESIRED.

6. Heating Coils: Provide spiral type heating coil of capacity as scheduled, installed in tank manhole.
7. Hot-Wells: Provide 8 inch hot-well extending from 4 inch above tank top to 4 inch above tank bottom. Provide tappings above tank for connection of oil suction and return piping. Provide 2 inch hole in well, just below top of tank, for venting.
8. Supply Tube: Provide extension of transfer pump suction line fitting into tank, terminating 6 inch above tank bottom and cut at 45 degree angle.
9. Vent Cap: cast iron threaded tee inlet; 40 mesh brass wire cloth screen.
10. Fill Box: Flush heavy duty, waterproof, cast iron body and top cap, and brass inner cap with lock with key wrench.

11. Remote Oil Gages: Balanced hydraulic type providing a true volumetric indication. Gage volume range to suit capacity storage; UL-listed and labeled.

2.12 GRADE MANHOLE

A. Precast Concrete Manhole Sections: ASTM C478, base and concentric cone sections with integral ladder.

B. Cast-Iron Ring and Cover: heavy-duty, water-resistant, cast-iron manhole frame, gasket, and bolted lid; 24 inch diameter inside opening dimension; 8 inches overall height.

PART 3 - EXECUTION

3.1 PIPE INSTALLATIONS

A. General: Refer to Section 221113 - Piping Materials and Methods" for basic piping installation instructions.

B. Install supply, return, fill, and vent piping at a uniform grade of 1/4 inch in ten feet downward in the direction of the storage tank.

3.2 UNDERGROUND TANK INSTALLATION

A. Perform air pressure test on tanks prior to placing into excavations. Test pressure shall not exceed 5 psi. Apply a soap solution to joints.

B. Excavate to a sufficient depth for a minimum of 3 foot earth cover from top at tank to grade; allowing for cast-in-place, reinforced concrete ballast pad, plus 6 inches of sand or pea gravel between ballast pad and tank. Excavation shall extend one foot around the perimeter of the tank.

SPEC EDITOR: BALLAST PAD SIZE AND REINFORCING SHOULD BE SUFFICIENT TO HOLD DOWN EMPTY TANK COMPLETELY SUBMERGED IN WATER.

C. Place reinforcing and concrete as specified in Division 03. Excavation floor and walls may serve as forms. Use ASTM C150 Portland Cement concrete, Type I, with normal weight aggregate conforming with ASTM C33, and having a 28 day compressive strength at 3,000 psi.

D. Set tiedown eyelets for hold-down straps in concrete ballast pad and tie to reinforcing steel.

E. Place 6 inches of clean sand or pea gravel on top of ballast pad.

F. Set tank on fill materials.

SPEC EDITOR: RETAIN BELOW FOR STEEL TANKS.

G. Protect anodes during tank placement and backfilling operations.

H. Install holddown straps.

I. Make piping connections.

J. Backfill excavation with clean sand or pea gravel. Tamp backfill to consolidate.

3.3 FIELD QUALITY CONTROL

A. Test oil piping in accordance with NFPA 31.

B. Remake leaking joints and connections using new materials.

3.4 COMMISSIONING

A. Test and adjust controls and safeties. Replace damaged or malfunctioning controls and equipment.

B. Train Owner's maintenance personnel on procedures and schedules related to start-up and shut-down, troubleshooting, servicing, and preventative maintenance.

C. Review data in Operating and Maintenance Manuals. Refer to Division 01 section "Project Closeout."

1. Schedule training with Owner through the Architect, with at least 7 days advance notice.

D. Before activating system perform these steps:

1. Open valves to full open position. Close bypass valves.
2. Remove and clean strainer screens.
3. Check pump for proper direction of rotation.
4. Fill oil storage tank with proper fuel type.
5. Check operating controls of fuel burner units.
6. Check operation at automatic bypass valves.
7. Check and set operating temperature controls on oil heaters.
8. Check corrosion monitoring systems for proper operation.

END OF SECTION 231113

UNIVERSITY OF MICHIGAN
ARCHITECTURE, ENGINEERING AND CONSTRUCTION

ARCHITECTURE & ENGINEERING
326 East Hoover, Mail Stop B
Ann Arbor, MI 48109-1002
Phone: 734-764-3414
Fax: 734-936-3334

BuildingName
The Description of the Project
P00000000 0000

SPECIFICATION DIVISION 23

NUMBER SECTION DESCRIPTION

DIVISION 23 HEATING, VENTILATING AND AIR CONDITIONING (HVAC)
SECTION 231123 - FACILITY NATURAL-GAS PIPING

END OF CONTENTS TABLE

DIVISION 23 HEATING, VENTILATING AND AIR CONDITIONING (HVAC)
SECTION 231123 - FACILITY NATURAL-GAS PIPING

REVISIONS:
8-1-99: CONTENT APPROVED AS NEW MASTER
8-11-99: REVISED TO VBS.DOT TEMPLATE

PART 1 - GENERAL

1.1 RELATED DOCUMENTS

INCLUDE PARAGRAPH 1.1.A AND B IN EVERY SPECIFICATION SECTION. EDIT RELATED SECTIONS 1.1.B TO MAKE IT PROJECT SPECIFIC.

A. Drawings and general provisions of the Contract, Standard General and Supplementary General Conditions, Division 1 Specification Sections, and other applicable Specification Sections including the Related Sections listed below, apply to this Section.

1.2 SCOPE OF WORK:

A. Provide piping, fittings, and specialties for Natural Gas Systems

1.3 WORK BY OTHERS - UTILITY COMPANY:

SPEC EDITOR: GAS METERS ARE TYPICALLY FURNISHED AND INSTALLED BY THE MICHCON, WITH CHARGES BILLED DIRECTLY TO THE OWNER. IF OTHER THAN MICHCON, CONTACT THE UTILITY SERVING THE SITE FOR INFORMATION AND COORDINATE WITH CONSTRUCTION MANAGEMENT. VERIFY AVAILABLE PRESSURE WITH MICHCON AND REQUIRED PRESSURE AT APPLIANCES. MICH CON GENERALLY LIMITS PRESSURE TO 14"WC UNLESS YOU CAN PROVE THE NEED FOR HIGHER PRESSURE.

A. Gas meter, pressure regulator and related valves will be furnished and installed by MichCon.

B. All gas piping outside the building, upstream of the gas meter is provided by MichCon.

C. Contractor shall coordinate installation of meter and related components with MichCon and owner.

D. Expenses and fees for MichCon work shall be paid for by the owner.

1.4 QUALITY ASSURANCE:

A. Comply with the requirements of NFPA 54 - National Fuel Gas Code, for gas piping materials and components, and gas piping systems installation, inspection, testing, and purging.

PART 2 - PRODUCTS

2.1 GAS LINE PRESSURE REGULATORS:

SPEC EDITOR: DO NOT SPECIFY APPLIANCE PRESSURE REGULATORS HERE IF THEY ARE SPECIFIED TO BE INTEGRAL WITH GAS APPLIANCE IN EQUIPMENT SECTION. GAS LINE PRESSURE REGULATORS ARE NORMALLY FURNISHED BY GAS SUPPLIER, AND BY GAS-FIRED EQUIPMENT MANUFACTURER. ADDITIONAL PRESSURE LIMITING AND RELIEF VALVES ARE NOT REQUIRED IN ALL CASES. CONSULT NFPA 54 AND GAS SUPPLIER.

SPEC EDITOR: IF USED, INCLUDE SCHEDULE OR OTHERWISE INDICATE INLET AND OUTLET PRESSURES AND FLOW

A. Single stage, steel jacketed, corrosion-resistant gas pressure regulators; with atmospheric vent, elevation compensator; with threaded ends for 2 inch and smaller, flanged ends for 2-1/2 inch and larger; for inlet and outlet gas pressures, specific gravity, and volume flow indicated.

SPEC EDITOR: VEN WILL ADD NAMES BELOW

B. Manufacturers:

1. _____
2. _____
3. _____
4. Etc…

2.2 LUBRICATED PLUG VALVES:

SPEC EDITOR: THIS GAS ISOLATION VALVE IS TYPICALLY SPECIFIED FOR LARGER PIPING ONLY, AT BOILERS ETC. FOR LAB ISOLATION, USE BALL VALVES SPECIFIED IN 220523. DELETE PARAGRAPH 2.2.A IF BALL VALVES ARE SPECIFIED FOR 2" AND LESS IN SECTION 220523.

A. Gas Cocks 2 Inch and Smaller: 150 psi WOG, bronze body, straight-away pattern, square head, threaded ends.

B. Gas Cocks 2-1/2 Inch and Larger: MSS SP-78; 175 psi, lubricated plug type, semi-steel body, single gland, wrench operated, flanged ends.

C. Manufacturers: Jenkins Bros., Lunkenheimer Co., NIBCO, Inc., Powell Co., Stockham

2.3 MASTER GAS SHUT OFF VALVE AND VALVE BOX

SPEC EDITOR: THIS WAS REQUIRED ON LABS AT ONE TIME, BUT IS NO LONGER. SPECIFIC APPLICATIONS MAY WARRANT ITS USE. ADDITIONAL RESEARCH SHOULD BE DONE PRIOR TO SPECIFYING. CONSIDER CHEMTROL.

A. Master gas shut off valve shall be bronze body ball valve. Recessed valve box constructed of extruded aluminum with aluminum back plate and frame cover. Assembly shall include clear flexible window with emergency pull ring. Permanently affix the following to the window:

CAUTION: MASTER GAS SHUT OFF VALVE
a) CLOSE ONLY IN EMERGENCY

B. Manufacturers: Ohmeda

PART 3 - EXECUTION

SPEC EDITOR: DELETE ARTICLE 3.1 AND 3.2 FOR NEW PROJECTS.

3.1 PREPARATION:

A. Precautions: Before turning off gas, turn off all equipment valves. Perform a leakage test to determine that all equipment is turned off.

3.2 HANDLING FLAMMABLE LIQUIDS:

A. Remove and legally dispose of liquid from drips in existing gas piping. Handle cautiously to avoid spillage or ignition.

3.3 NATURAL GAS PIPING INSTALLATION REQUIREMENTS:

A. See Section 221113 for piping materials and installation requirements.

B. Install, inspect, test, and purge natural gas systems in accordance with NFPA 54, and local utility requirements.

C. See Section 220523 for valve installation requirements.

SPEC EDITOR: INDICATE ON THE DRAWINGS, THE ROUTING AND TERMINATION LOCATION OF THE CONDUIT VENT PIPE.

D. Gas piping in air plenum ceilings shall be continuously welded or installed in air-tight conduit constructed of Schedule 40 seamless black steel pipe with welded joints. Vent conduit to the outside and terminate with a screened vent cap. Valves shall not be installed in plenums.

E. Drips and Sediment Traps: Install a drip leg at inlet to terminal equipment, points where condensate may collect, and at the outlet of the gas meter. Do not install drips where condensate is likely to freeze. Construct drips using a tee with plugged or capped bottom outlet. Drip shall be minimum of 3 pipe diameters long, same size as pipe. Locate drips to permit cleaning and emptying.

3.4 GAS LINE PRESSURE REGULATOR INSTALLATION:

SPEC EDITOR: REFER TO NFPA 54 FOR OVERPRESSURE PROTECTION.

A. Install a gas isolation valve upstream of each gas pressure regulator. Where two gas pressure regulators are installed in series in a single gas line, a valve is not required at the second regulator.

B. Install pressure relief or pressure limiting devices so they can be readily operated to determine if the valve is free; so they can be tested to determine the pressure at which they will operate; and examined for leakage when in the closed position.

C. Install vent line from pressure regulators to outdoors.

3.5 ELECTRICAL BONDING AND GROUNDING:

A. Install above ground portions of gas piping systems, upstream from equipment shutoff valves electrically continuous and bonded to a grounding electrode in accordance with NFPA 70 - "National Electrical Code."

B. Do not use gas piping as a grounding electrode.

C. Conform to NFPA 70 - "National Electrical Code," for electrical connections between wiring and electrically operated control devices.

END OF SECTION 231123

UNIVERSITY OF MICHIGAN
ARCHITECTURE, ENGINEERING AND CONSTRUCTION

ARCHITECTURE & ENGINEERING
326 East Hoover, Mail Stop B
Ann Arbor, MI 48109-1002
Phone: 734-764-3414
Fax: 734-936-3334

BuildingName
The Description of the Project
P00000000 0000

SPECIFICATION DIVISION 23

NUMBER SECTION DESCRIPTION

DIVISION 23 HEATING, VENTILATING AND AIR CONDITIONING (HVAC)
SECTION 232116 - HYDRONIC PIPING SPECIALTIES

END OF CONTENTS TABLE

DIVISION 23 HEATING, VENTILATING AND AIR CONDITIONING (HVAC)
SECTION 232116 - HYDRONIC PIPING SPECIALTIES

REVISIONS:
8-1-99: CONTENT APPROVED AS NEW MASTER
8-11-99: REVISED TO VBS.DOT TEMPLATE
02-25-04: LAST SPEC TEAM REVISION

06-03-08: ADDED TACO

AUGUST 2016: REVISED TO ADD THRUSH AS APPROVED MFR. FOR COALESCING SEPARATORS. D. KARLE PER FP/PLMG MTT.

JANUARY 2017: IMPROVED COALESCING SEPARATOR SPEC. M. MAU FOR FP/PLMG MTT.

PART 1 - GENERAL

1.1 RELATED DOCUMENTS

INCLUDE PARAGRAPH 1.1.A AND B IN EVERY SPECIFICATION SECTION. EDIT RELATED SECTIONS 1.1.B TO MAKE IT PROJECT SPECIFIC.

A. Drawings and general provisions of the Contract, Standard General and Supplementary General Conditions, Division 1 Specification Sections, and other applicable Specification Sections including the Related Sections listed below, apply to this Section.

1.2 SCOPE OF WORK:

A. Provide hydronic specialties for the following systems:

1. Chilled Water System
2. Condenser Water System
3. Hot Water Heating System
4. Process Cooling Water System

PART 2 - PRODUCTS

2.1 AUTOMATIC AND MANUAL AIR VENTS:

SPEC EDITOR: INCLUDE THE U-M STANDARD DETAILS FOR AIR VENTS ON THE PROJECT DOCUMENTS.

A. Manual air vents shall be ¾" ball valve per Section 220523.

B. Automatic air vents shall be non-ferrous, rated for 150 psig maximum operating pressure.

1. Manufacturers:
   a. For pipe sizes 2" and less. Bell & Gosset model 87, Armstrong model 75, Taco Hy-Vent
   b. For pipe sizes 2 ½" and larger. Hoffman model 78, Armstrong model 75.

2.2 SUCTION DIFFUSERS:

A. Provide angle pattern suction diffusers rated at 175 psig, 250 F., having cast iron or ductile iron body, with flanged (grooved piping if grooved piping is specified for system) connections. Provide a stainless steel combination diffuser-strainer cylinder with 3/16" or 1/8" diameter perforations, stainless steel flow straightening inlet vanes, a 16 mesh bronze start-up strainer, a permanent magnet and an adjustable support foot.

B. Manufacturers: Bell & Gossett, Armstrong, Wheatley, Taco

2.3 TRIPLE DUTY VALVE:

A. Provide a straight or angle pattern combination bubble tight shut-off, calibrated balancing and non-slam check valve rated at 175 psig working pressure and 250 degrees F. Body shall be cast iron or ductile iron, with flanged or grooved piping connections.

B. Valve shall have a bronze seat, replaceable bronze disc with EDPM seat insert, stainless steel stem and spring. Provide brass readout valves with integral check valves to measure differential pressure readings across the orifice.

C. Valve design shall permit re-packing under full system pressure.

D. Manufacturers: Bell & Gossett model 3D or 3DS, Armstrong, Wheatley, Taco

2.4 WATER PRESSURE REGULATING/REDUCING VALVE:

SPEC EDITOR: THIS IS USED ON LASER COOLING WATER AND MAKE UP TO CLOSED HEATING & COOLING SYSTEMS, 1/2" THROUGH 3"

A. Bronze valve body, renewable stainless steel seat. Adjustable reduced pressure range, built-in bypass, diaphragm type with spring cage and orifice. Pressure to be adjustable from a top screw on the valve.

B. Manufacturers: Watts model 223BHP, Bell & Gossett, Hoffman

2.5 WATER PRESSURE RELIEF VALVE:

SPEC EDITOR: THIS IS USED WITH REGULATOR LISTED ABOVE

A. ASME rated, sized for the full installed capacity of the low pressure side of the regulating station. Factory set valve at not more than 20% above low side pressure. Furnish seat material suited for the service.

B. Manufacturers: Consolidated, ITT Bell & Gossett, ITT McDonnell Miller, Watts

2.6 COALESCING SEPARATOR:

A. Provide coalescing type air/dirt or dirt separator, type and sized to match main system piping or as indicated on the drawings. Air/dirt separator shall include separate air chamber for air removal and a lower vessel extension for dirt separation.

B. Separator shall be welded carbon steel fabricated with ANSI B16.5 flange connections and rated for 150 psig design pressure and 250F design temperature. Separator shall include an internal assembly of rigidly constructed vertical tubes of stainless steel or copper wire matrix designed to coalesce microbubbles out of solution and form larger air bubbles that rise to the top of the vessel and to separate dirt particles that collect at the bottom.

C. Separators shall include manufacturer's integral high capacity air vent or cast iron air vent as specified in Section 2.1, flanged lower head to allow coalescing media removal, side tap valve to facilitate system filling and bottom drain connection with ball valve for draining.

D. Separators shall be capable of removing 100% of the free air, 100% of the entrained air, and up to 99.6% of the dissolved air in the system fluid. Dirt separation shall be at least 80% of all particles 30 micron and larger within 100 passes.

E. Approved Manufacturers:

1. Spirotherm
2. Thrush Aar-O-Vent

2.7 EXPANSION TANKS:

SPEC EDITOR / DESIGNER: INCLUDE THE U-M STANDARD DETAIL FOR EXPANSION TANKS ON THE PROJECT DOCUMENTS.

A. Provide expansion tank, constructed of welded steel with butyl rubber bladder, replaceable and full acceptance volume, ASME stamped for 125 psig at 240F. Tank shall have capacity, size and operating pressures as shown on drawings.

B. Manufacturer: Bell & Gossett, Wessels, Amtrol, Armstrong or Taco.

2.8 CENTRIFUGAL SOLID SEPARATOR:

SPEC EDITOR: THIS IS FOR REMOVAL OF HEAVY SOLIDS (RUST, SCALE, DIRT ETC.), PRIMARILY IN OPEN LOOP CONDENSER WATER WITH PLATE AND FRAME HEAT EXCHANGERS. PERFORMANCE MUST BE SCHEDULED ON DRAWINGS, PIPING CONNECTIONS SHOULD BE DETAILED.

A. Provide centrifugal solids separator, with efficiency of 98% to 40 microns, as scheduled and detailed on drawings. Body shall be steel, ASME stamped for 125 psig, with flanged connections and factory painted exterior. Provide 4"x6" cleanout for lower section, and flanged upper dome for easy maintenance access.

B. Provide automatic recovery tank with bag filter (solids collection vessel) as scheduled and detailed. Controlled continuous flow, 25 micron solids collection bag, 600 cubic inches capacity, manual isolation valves, sight glass for flow verification and differential pressure switch, Annunciator in an independent junction box, contacts rated for 4 amps at 115 volts, set at 10 psid with a range of 4 to 25 psid.

C. Manufacturers: LAKOS, Griswold Controls

2.9 IN –LINE FILTER:

A. Cartridge type impingement filter, with replaceable 100 micron or 300 micron filter media. Size and capacity shall be as indicated on drawings.

B. Manufacturers: Bruner, Culligan, Cuno, Dollinger, Honeywell.

PART 3 - EXECUTION

3.1 INSTALLATION OF AUTOMATIC & MANUAL AIR VENTS

INCLUDE THE U-M STANDARD DETAILS FOR AIR VENTS ON THE PROJECT DOCUMENTS.

A. Install automatic air vents at high points (where pipe drops in direction of flow) in hydronic systems. Isolate the auto air vent with an isolation valve.

B. Where manual air vents are indicated, they shall consist of an isolation valve terminated with an elbow, threaded hose connection, and hose cap.

3.2 INSTALLATION OF SUCTION DIFFUSERS:

A. Install to allow complete removal of strainer elements. Remove 16 mesh bronze start-up mesh after system start-up and flushing is complete. Replace with standard operating strainer. Adjust support foot to carry weight of suction piping (to inertia pad where applicable).

3.3 INSTALLATION OF EXPANSION TANK:

INCLUDE THE U-M STANDARD DETAIL FOR EXPANSION TANKS ON THE PROJECT DOCUMENTS

A. See drawings for locations, support and piping details. Document initial and operating pressures, and temperature, and submit report for approval.

END OF SECTION 232116

UNIVERSITY OF MICHIGAN
ARCHITECTURE, ENGINEERING AND CONSTRUCTION

ARCHITECTURE & ENGINEERING
326 East Hoover, Mail Stop B
Ann Arbor, MI 48109-1002
Phone: 734-764-3414
Fax: 734-936-3334

BuildingName
The Description of the Project
P00000000 0000

SPECIFICATION DIVISION 23

NUMBER SECTION DESCRIPTION

DIVISION 23 HEATING, VENTILATING AND AIR CONDITIONING (HVAC)
SECTION 232123 - PLUMBING AND HYDRONIC PUMPS

END OF CONTENTS TABLE

DIVISION 23 HEATING, VENTILATING AND AIR CONDITIONING (HVAC)
SECTION 232123 - PLUMBING AND HYDRONIC PUMPS

THIS SECTION SPECIFIES CENTRIFUGAL PUMPS FOR HVAC SYSTEMS (CHILLED WATER, CONDENSER WATER, HEATING HOT WATER), PROCESS COOLING, AND DOMESTIC HW RETURN PUMPS. STEAM CONDENSATE PUMPS AND RECEIVERS, SMALL HVAC CONDENSATE PUMPS, CW BOOSTER PUMP PACKAGES, AND HEAT TRANSFER PACKAGES, SUMP PUMP, FIRE PUMPS ARE SPECIFIED ELSEWHERE.

7/16/12: ADDED THAT PUMP SEALS SHALL BE UNAFFECTED BY CHLORAMINES. ADDED NSF 61 REFERENCE UNDER QUALITY ASSURANCE.

2014-01-06: IMPROVED LEAD FREE REQUIRMENTS TO REFLECT U.S SAFE DRINKING WATER ACT REQUIREMENTS THAT WENT INTO EFFECT JAN. 4, 2014. D.KARLE FOR MTT.

2016-10-31: ADDED TO PART 2 - WET ROTOR, ECM VARIABLE SPEED IN-LINE CIRCULATOR PUMP FURNISHED AS AN ASSEMBLY WITH SPEED CONTROLS. WPG FOR HYDRONICS/STEAM MTT.

PART 1 - GENERAL

1.1 RELATED DOCUMENTS

INCLUDE PARAGRAPH 1.1.A AND B IN EVERY SPECIFICATION SECTION. EDIT RELATED SECTIONS 1.1.B TO MAKE IT PROJECT SPECIFIC.

A. Drawings and general provisions of the Contract, Standard General and Supplementary General Conditions, Division 1 Specification Sections, and other applicable Specification Sections including the Related Sections listed below, apply to this Section.

B. Related Sections:

1. Section 220513: Motors.
2. Section 220548: Vibration Control
3. Division 26: Electrical.

1.2 SUMMARY

A. Includes pumps for hydronic and domestic hot water return service. Includes process pumps except those covered in other specification sections.

1. Does not include steam condensate, domestic booster package, sump, or fire pumps.

1.3 SUBMITTALS

A. Submit the following product data for approval:

1. Manufacturer information.
2. Dimensions and elevations.
3. Performance data/pump curves.
4. Materials of construction.

5. Motor data including motor manufacturer.
6. Vibration isolation and inertia bases

1.4 QUALITY ASSURANCE:

A. Manufacturers and Products: The products and manufacturers specified in this Section establish the standard of quality for the Work. Subject to compliance with all requirements, provide specified products from the manufacturers named in Part 2.

B. Reference Standards: Products in this section shall be built, tested, and installed in compliance with the following quality assurance standards; latest editions, unless noted otherwise.

1. Hydraulic Institute Compliance: Design and manufacture pumps in accordance with ANSI/ Hydraulic Institute Standards.
2. National Electrical Code Compliance: Provide components complying with NFPA 70 National Electrical Code.
3. UL Compliance: Provide HVAC pumps which are listed and labeled by UL, and comply with UL Standard 778 "Motor Operated Water Pumps."
4. Pumps used for potable water service: National Sanitation Foundation NSF/ANSI-61 (potable drinking water) and NSF-61 Annex G (listed as ≤ 0.25% weighted average lead content) (and/or NSF/ANSI-372) and Annex F.
5. Pumps used for potable water service: U.S Safe Drinking Water Act.

C. Single Source Responsibility: Obtain pumps from a single manufacturer.

SPEC EDITOR: REVISE WARRANTY PER PROJECT. LONGER WARRANTY PERIOD MAY BE APPROPRIATE FOR CERTAIN TYPES OF WORK. INCLUDE THIS ARTICLE IN EVERY SPECIFICATION SECTION.

1.5 WARRANTY

A. Provide a complete parts and labor warranty for a minimum of one year from the date of Substantial Completion.

PART 2 - PRODUCTS

2.1 GENERAL PUMP REQUIREMENTS:

A. Unless noted otherwise, provide pumps meeting these general requirements.

SPEC EDITOR: NOTE THE GENERALIZED PUMP AND SEAL T/P RATINGS AND THE NOTATION "SUITABLE FOR SERVICE," INDICATED BELOW. EDIT THE SPECIFIC PUMP SECTIONS IF YOUR PROJECT HAS SEVERE SERVICE OR MORE DEMANDING T/P REQUIREMENTS.

B. Suitable for the service, rated for the temperature and pressure indicated. When not indicated, pump and pump seals shall be rated for not less than 175 psig working pressure and 225 degrees F continuous water temperature. Provide pumps with capacities and performance as scheduled on the Drawings.

C. Pumps shall have steel shaft, cast iron case, and cast bronze or stainless steel impeller. Flanged pumps shall have suction and discharge taps in flanges, and drain and vent taps in the volute. Piping connections shall be flanged for connection sizes 2 1/2 inches and larger.

D. Pumps shall have statically and dynamically balanced impeller, with a constantly dropping head curve from shutoff to cutoff, and shall not overload their respective motors on any point throughout the head capacity curve. Key and lock impeller to shaft.

E. Motors shall be factory coupled to pump and comply with requirements of Related Section Motors, with rpm, voltage and HP as scheduled. Single phase motors shall have built-in overload protection.

F. Where flexible coupling is specified, coupling shall be EPDM, center dropout type, capable of absorbing torsional vibration and shaft misalignment, complete with ANSI B15.1/OSHA 1910.219 coupling guard.

G. Pumps for domestic water systems shall be lead free (less than 0.25 percent lead by weight in all wetted surfaces) all bronze or stainless steel construction.

SPEC EDITOR: FOR PUMPS USED FOR GLYCOL SERVICE, SILICON CARBIDE SEALS SHOULD BE SPECIFIED. HOWEVER, ENGINEER MUST VERIFY WHICH MFR.S CAN OFFER SILICON CARBIDE SEALS, AND THEN EDIT THE SPEC ACCORDINGLY.

H. Pump seals shall be unaffected by chloramines.

I. Pumps used for glycol shall have seals rated for glycol service.

J. Pump selection:

1. Select pumps so an impeller/volute is sized to accommodate 10 percent more head than at duty point, unless noted otherwise on pump schedule.
2. Select pump no greater than 85 percent of end of curve flow.
3. Select pump at the point of best efficiency for a given impeller-casing combination. Deviations shall be within 3 percent of maximum efficiency point on the increasing capacity side of the maximum efficiency point.
4. Maximum Pump Suction velocity:
   a. Inline: 12 fps.
   b. End Suction: 13 fps.
   c. Double Suction: 15 fps.

K. Balance pumps per ANSI / Hydraulic Institute procedures. Perform electronic vibration analysis for all pumps 1/2 hp and above. Unless noted otherwise, the maximum allowable RMS (filter in) velocity at maximum pump motor speed, measured at each pump and motor bearing, shall not exceed 0.13 inches/sec in the vertical, horizontal and axial directions. For pumps to be applied in variable speed applications, balance and test to assure this vibration limit is not exceeded at any pump speed. Pumps may be field tested after installation by an independent testing agency. Any pump found to exceed the specified vibration limits shall be corrected to perform within those limits without cost to the Owner.

2.2 IN-LINE CIRCULATORS

SPEC EDITOR: GENERALLY NOT RECOMMENDED FOR MORE THAN 1/2HP. SYSTEM LUBRICATED/NO OILING. 3-PIECE OIL LUBE MODELS TO BE PHASED OUT. TYPICAL CONSTRUCTION HAS MOTOR CARTRIDGE REPLACEABLE WITH ROTOR ATTACHED. SLEEVE TYPE BEARINGS IN LIEU OF BALL TYPE. NO MECHANICAL SEAL. AVAILABLE METALLURGY CI BODY W/ BRONZE IMPELLER; CI BODY W/ STAINLESS STEEL IMPELLER. THESE PUMPS ARE USUALLY SUPPORTED BY THE PIPE; DO NOT USE INLET/OUTLET FLEXIBLE PIPE CONNECTORS. THEY COME IN STANDARD SIZES; IMPELLER TRIMMING IS NOT DONE; SINGLE PHASE MOTORS.

A. Domestic Hot Water: Close coupled, single suction, lead free bronze or stainless steel impeller and body. System-lubricated, ceramic shaft. Permanently lubricated, bronze or carbon sleeve bearings.

B. Hydronic Systems: Close coupled; single suction bronze or stainless steel impeller. System-lubricated, alloy steel shaft, Cast iron body. Permanently lubricated sleeve bearings.

C. Rated for 150 psig working pressure, minimum.

D. Acceptable Manufacturers:

1. ITT Bell & Gossett.
2. Armstrong.
3. Grundfos.
4. Weinman.
5. Taco In-Line Circulators.

NOTE THAT FACTORY-ASSEMBLED ECM CIRCULATORS WILL NOT COMPLY WITH UM MASTER SPEC REQUIREMENTS FOR MOTORS AND VARIABLE SPEED DRIVES.

2.3 IN-LINE WET ROTOR VARIABLE SPEED ECM CIRCULATORS

THE FOLLOWING SECTION COVERS SMALL CAPACITY AND HEAD SINGLE PHASE FRACTIONAL TO 1 HORSEPOWER, SINGLE PHASE, ELECTRONICALLY-COMMUTATED MOTOR DRIVEN SINGLE STAGE CIRCULATING PUMPS. TYPICAL CONSTRUCTION HAS BUILT-IN, FACTORY ASSEMBLED VARIABLE SPEED DRIVE AND CONTROLS FURNISHED AS AN ASSEMBLED PRODUCT. SLEEVE TYPE BEARINGS TYPICAL V. BALL TYPE. NO MECHANICAL SEAL. THESE PUMPS ARE USUALLY SUPPORTED BY THE PIPE; TYPICALLY DO NOT USE INLET/OUTLET FLEXIBLE PIPE CONNECTORS. EDIT THIS SECTION CAREFULLY FOR THE SPECIFIC APPLICATION.

A. Factory-assembled and tested, self-regulating, in line wet rotor type circulator pump, with synchronous, permanent-magnet type motor and integrated variable speed electronically commutated motor.

Construction Features:

1. Single phase, 120 VAC or 208-230 VAC as scheduled, 60 Hz.
2. Pump Shaft: Stainless steel.
3. Bearings. Metal impregnated carbon sleeve or ball bearing type.
4. Connection Style: Flanged
5. Rating: 145 psig at 230 F

B. Domestic Hot Water: Lead free bronze, glass-filled polypropylene engineered composite or stainless steel impeller; lead free bronze or stainless steel body.

C. Hydronic Systems: cast iron, glass-filled polypropylene engineered composite, or stainless steel impeller. System-lubricated, cast iron body.

D. Electrical Components, Devices, and Accessories: Listed and labeled as defined in NFPA 70, by a qualified testing agency, and marked for intended location and application. UL 778 listed for motor-operated water pumps, including protection against over/under voltage, thermal over-load (motor and electronics), over current, and protection for locked rotor and dry run/no-load condition.

E. Terminal Box to include gasketed cover, NPT power cable/conduit connection, with coded terminal strip indicating common/neutral/ground.

F. Controls: Single Phase Electronic Control Converter.

SPEC EDITOR: SELECT THE APPROPRIATE CONTROL SCHEME BELOW. EDIT FOR PROJECT-SPECIFIC PUMP CONTROL REQUIREMENTS. SOME PUMPS PROVIDE THE LISTED FUNCTIONS WITH THE ON-BOARD CONTROLLER VIA INTERNAL ALGORITHM OR SENSOR, SOME REQUIRE AN EXTERNAL SIGNAL, AND SOME CAN ACCOMMODATE EITHER. SOME LISTED FUNCTIONS ARE NOT OFFERED BY ALL THE LISTED MFRS. FURTHER, THE CHOSEN CONTROL SCHEME WILL DICTATE WHETHER THE PRODUCT REQUIRES A DIGITAL RS-485 COMMUNICATION CONNECTION (BACNET, MODBUS, OR LONWORKS), A 4-20MA EXTERNAL SIGNAL, OR CAN USE A SENSORLESS METHOD. CONTROL VIA DIGITAL COMMUNICATIONS WOULD LIKELY REQUIRE AN ADDITIONAL CONTROL MODULE.

1. Sensorless Control: Integral electronic variable speed controller shall provide the following user selectable modes of operation without the use of external(remote)sensors:
   a. Proportional Pressure/Maintain Flow Set Point.
   b. Constant Differential Pressure/Maintain Pressure Set Point.
   c. Constant Speed.
   d. Constant Temperature/Maintain Temperature Set Point
   e. Constant Temperature Rise/Differential
   f. Proportional P-T/Maintain Pressure Proportional to Varying Temperature
2. Sensor Control: The integral electronic variable speed controller shall accept an external sensor input of 4-20 mA and provide the following user selected modes of operation:
   a. Proportional Pressure/Maintain Flow Set Point.
   b. Constant Differential Pressure/Maintain Pressure Set Point.
   c. Constant Temperature/Maintain Temperature Set Point
   d. Constant Temperature Rise/Differential
   e. Proportional P-T/Maintain Pressure Proportional to Varying Temperature
3. Remote Communication and Local Display: Provide single port BACnet 3-wire communication cable CAT 5/6 connection. The local display shall be field adjustable for horizontal of vertical position, allow control mode and set point changes, and display the following information:
   a. Operating Status – On/Off.

b. Control Mode.
c. Current Set Point Parameter.
d. Fault and Warning Signals.

SPEC EDITOR: BASIS OF DESIGN: GRUNDFOS MAGNA 3; WILO STRATOS; B & G ECOCIRC XL.

G. Acceptable Manufacturers:

1. ITT Bell & Gossett.
2. Wilo.
3. Grundfos.

2.4 IN-LINE HORIZONTAL CLOSE COUPLED PUMPS - HANGER SUPPORTED

SPEC EDITOR: SIZE GENERALLY 1/4 TO 3HP. KEEP MOTOR IN HORIZONTAL POSITION WHERE POSSIBLE, BUT UNIVERSAL MOUNT MOTOR ALLOWS FOR ANY PIPE ORIENTATION. SUPPORT PUMP VIA PIPES, NOT MOTOR. TYPICALLY DO NOT USE FLEXIBLE COUPLINGS. CONSIDER ADDING CAST IMPELLER (VS STAMPED) AS REQUIRED.

A. Close/rigid coupled, single suction impeller. Ceramic mechanical seal. Permanently sealed, permanently lubricated.

B. Domestic Hot Water: Lead free.

C. Pump shall be equipped with an internally flushed seal assembly.

D. Provide universal mount motors that meet NEMA specifications and of size, voltage and enclosure indicated on Drawings. Motor shall be provided with heavy-duty, permanently lubricated ball bearings rated for the maximum load for which the pump is designed.

E. Acceptable Manufacturers:

1. ITT Bell & Gossett Series 60.
2. Armstrong.
3. Grundfos.
4. Weinman.
5. Taco Series 1600.

2.5 FLOOR-MOUNTED, VERTICAL IN-LINE SPLIT COUPLED PUMPS

SPEC EDITOR: GENERALLY, FOR SIZES MORE THAN 3HP; TO 1000 HP. TYPICAL SPLIT-COUPLED PUMPS CAN BE DIRECT-COUPLED OR FLEXIBLE-COUPLED. CONSTRUCTION HAS BALL BEARINGS, MECHANICAL SEAL; THESE PUMPS ARE SUPPORTED/ANCHORED TO CONCRETE PAD, WITH INLET/OUTLET FLEXIBLE PIPE CONNECTORS. CONSIDER ADDING REQUIREMENT FOR FLEXIBLE COUPLING (DODGE, OMEGA, DURA - FLEX) FOR SEPARATE REMOVAL/REPLACEMENT OF LARGER (+15 HP) MOTORS. USE SLOWER SPEEDS 1800/1200 RPM FOR HIGH FLOW, LOW HEAD APPLICATIONS. VERTICAL MOTOR ORIENTATION OFFERS LOWER VIBRATION/NOISE, LOWER IMPELLER/SHAFT LOADING (LESS PRESSURE IMBALANCE), LOWER CAVITATION POTENTIAL. NO SUCTION DIFFUSER REQUIRED.

A. Split-coupled, single suction enclosed impeller. Mechanical seals. Carbon graphite throttle bushing.

B. Pump shall be equipped with an externally flushed seal assembly with manual air vent valve.

C. Provide universal mount motors that meet NEMA specifications and of size, voltage and enclosure indicated on Drawings. Motor shall be provided with heavy-duty, greaseable or permanently lubricated ball bearings rated for the maximum load for which the pump is designed.

D. Acceptable Manufacturers:

1. ITT Bell & Gossett Series 80-SC.
2. Armstrong.
3. Grundfos.
4. Weinman.
5. Taco KS Vertical Split coupled.

2.6 FLOOR MOUNTED, DOUBLE SUCTION PUMPS

SPEC EDITOR: THIS SECTION CAN BE USED FOR VERTICAL OR HORIZONTAL SPLIT CASE. EDIT TO SUIT PROJECT REQUIREMENTS. VERTICAL SPLIT CASE PUMPS SAVE SPACE BUT ARE SINGLE SOURCE AND SHALL ONLY BE SPECIFIED WITH THE PERMISSION OF THE U-M DESIGN MANAGER.

A. Single stage, double suction centrifugal, bronze fitted, base mounted, flexibly coupled pump.

B. Vertical or horizontal split case as indicated, cast iron volute with integrally cast feet, gauge ports at nozzles, vent, and drain ports. Horizontal shaft unless specifically indicated otherwise.

C. Stainless steel shaft designed for less than 0.002 inch deflection, with mechanical seals suitable for temperature and service scheduled, with re-greaseable bearings. Bearing life shall be L10 50,000 hr. life minimum. Bearing grease shall be rated to 700 Deg F and resist water/condensation washout.

D. Mechanical carbon face seal rotating against a stationary silicon carbide face.

E. Pump shall be equipped with an internally flushed seal assembly.

F. Impeller shall be of the enclosed double suction type made of low zinc silicon brass or bronze, hydraulically and dynamically balanced and keyed to shaft.

G. The pump bearings and mechanical seals shall be serviceable without disturbing the upper casing half, piping connections or electrical motor connections.

H. Base: Pump and motor shall be mounted on a single, rigid, groutable, welded, structural steel frame.

I. Acceptable Manufacturers Vertical Split Case Pumps:

1. ITT Bell & Gossett VSX.

J. Acceptable Manufacturers Horizontal Split Case Pumps.

1. ITT Bell & Gossett.
2. Armstrong.
3. Weinman.
4. Paco.

2.7 END-SUCTION, CLOSE-COUPLED PUMPS

SPEC EDITOR: BASIS OF DESIGN: SERIES 1531 BELL & GOSSETT. OCCASIONALLY USED FOR HYDRONIC SERVICE, OFTEN USED FOR DOMESTIC BOOSTERS.

A. Single stage, end suction centrifugal, bronze fitted, close-coupled with base plate.

B. Provide lead free when used for domestic water service.

C. Mechanical seals with ceramic seal seat and carbon seal ring. Oil or grease lubricated, bronze sleeve bearings. Provide slinger on motor shaft between motor and seals to prevent liquid that leaks past pump seals from entering the motor bearings.

D. Back pull-out design to allow pump bearings and seals to be serviced without disturbing piping.

E. Provide universal mount motors that meet NEMA specifications and of size, voltage and enclosure indicated on Drawings.

F. Acceptable Manufacturers:

1. ITT Bell & Gossett.
2. Armstrong.
3. Weinman.
4. Taco.

2.8 FLOOR-MOUNTED, END-SUCTION, FLEXIBLY-COUPLED PUMPS

SPEC EDITOR: BASIS OF DESIGN: SERIES BELL & GOSSETT 1510

A. Single stage, end suction centrifugal, bronze fitted, base mounted pump, flexibly-coupled.

B. Vertical split case back pull-out design to allow pump bearings and seals to be serviced without disturbing piping connections or electric motor connections.

C. Wear Rings (if provided as standard): Replaceable, bronze.

D. Mechanical seals with ceramic seat and carbon seal ring. Oil or grease lubricated, bronze sleeve bearings.

E. Base: Pump and motor shall be mounted on a single, rigid, groutable, welded, structural steel frame.

F. Acceptable Manufacturers:

1. ITT Bell & Gossett.
2. A-C Pump - ITT Corp.
3. Armstrong.
4. Weinman.
5. Taco.

PART 3 - EXECUTION

3.1 GENERAL PUMP INSTALLATION

A. Install the pump as recommended by the manufacturer and as shown on the Drawings. Provide adequate clearance for service access.

B. Independently support piping from the pump casing, regardless of what is recommended by the manufacturer. Demonstrate to the Commissioner that the piping is independently supported.

C. Fill and vent the system of all air. Purge the pump of air as recommended by manufacturer; check for proper rotation.

D. Place the pump in service and check for proper operation. When required by the Commissioner, record voltage and amperage draw (separate from the T&B contractors work) and provide report to Commissioner.

3.2 IN-LINE PUMP INSTALLATION

A. Install suction and discharge flexible connectors as recommended by the manufacturer and as shown on the drawings.

B. Verify pump is designed for the intended orientation; horizontal versus vertical motor/shaft orientation.

C. Support the pump as recommended by manufacturer. Do not attach supports to motor.

3.3 FLOOR-MOUNTED PUMP INSTALLATION

A. Set pump base level, using stainless steel shims and metal blocks designed for leveling machinery bases. Anchor/attach to base as recommended by the manufacturer. Pre-align, connect piping, re-check alignment, and then grout with non-shrink grout.

B. Provide final alignment in field via laser alignment device, by the manufacturer's representative. Submit alignment test data for approval. If report indicates pump cannot be aligned properly, correct conditions and re-laser-align.

3.4 COMMISSIONING

A. Perform the commissioning activities as outlined in the Division 01 Section Commissioning and other requirements of the Contract Documents.

3.5 MANUFACTURER INSPECTION AND START-UP

A. For all floor mounted pumps and for all inline pumps greater than 3 HP, after installation and prior to operation, pump manufacturer’s factory trained field representative shall inspect the pumps for proper installation and lubrication, final align pump/motor/coupling using laser alignment, conduct start-up, and submit written report.

END OF SECTION 232123

UNIVERSITY OF MICHIGAN
ARCHITECTURE, ENGINEERING AND CONSTRUCTION

ARCHITECTURE & ENGINEERING
326 East Hoover, Mail Stop B
Ann Arbor, MI 48109-1002
Phone: 734-764-3414
Fax: 734-936-3334

BuildingName
The Description of the Project
P00000000 0000

SPECIFICATION DIVISION 23

NUMBER SECTION DESCRIPTION

DIVISION 23 HEATING, VENTILATING AND AIR CONDITIONING (HVAC)
SECTION 232216 - STEAM AND CONDENSATE PIPING SPECIALTIES

END OF CONTENTS TABLE

DIVISION 23 HEATING, VENTILATING AND AIR CONDITIONING (HVAC)
SECTION 232216 - STEAM AND CONDENSATE PIPING SPECIALTIES

REVISIONS:
8-1-99: CONTENT APPROVED AS NEW MASTER
3-29-05: LAST SPEC TEAM REVISION
1-05-07:UPDATED PER STEAM & HYDRONICS COMMITTEE MTG JAN 07
06-03-08: ADDED WATON-MCDANIEL TO FLASH TANK

PART 1 - GENERAL

1.1 RELATED DOCUMENTS

INCLUDE PARAGRAPH 1.1.A AND B IN EVERY SPECIFICATION SECTION. EDIT RELATED SECTIONS 1.1.B TO MAKE IT PROJECT SPECIFIC.

A. Drawings and general provisions of the Contract, Standard General and Supplementary General Conditions, Division 1 Specification Sections, and other applicable Specification Sections including the Related Sections listed below, apply to this Section.

1.2 SCOPE OF WORK:

A. Furnish and install piping, fittings, and specialties for the following systems:

1. Low pressure steam and condensate systems (nominal 5 to 15 psig
2. Medium pressure steam and condensate systems(nominal 60 psig)
3. Pumped condensate

PART 2 - PRODUCTS

SPEC EDITOR: FOR ALL TRAPS, PROVIDE A SCHEDULE ON DRAWINGS WITH MAKE AND MODEL NUMBER.

2.1 FLOAT AND THERMOSTATIC TRAPS:

SPEC EDITOR: F&T TRAPS ARE FOR LOW PRESSURE STEAM, 25 PSI AND UNDER. THEY ARE SUBJECT TO DAMAGE IF WATER HAMMER, EXCESSIVE TEMPERATURES OR PRESSURES ARE PRESENT. THEY CAN BE USED FOR 60 PSIG STEAM.

A. Cast iron body, bolted cap, renewable, stainless steel internal components, balanced pressure thermostatic air vent. Internal parts shall be accessible without disturbing piping.

B. Capable of discharging condensate, air and other non-condensable gasses at pressures from 125 psig to 25 inches of vacuum without loss of steam.

C. Manufacturers: Armstrong A and B series, ITT Hoffman, Spirax-Sarco, Watson McDaniels.

2.2 INVERTED BUCKET TRAPS:

SPEC EDITOR: BUCKET TRAPS ARE INFREQUENTLY USED. USE WHERE CONDENSATE MUST BE LIFTED, AND FOR 60 PSIG TRAPS

A. ASTM A 278, class 30 cast iron body and cap, pressure rated for 250 psi; stainless steel head and seat; stainless steel valve retainer, lever, guide pin assembly, brass or stainless steel bucket.

B. Manufacturers: Armstrong Series 800, ITT Hoffman, Spirax-Sarco, Watson McDaniels

2.3 CONDENSATE FLASH TANK:

SPEC EDITOR: FOR USE WITH 60 PSIG STEAM ONLY.

A. Provide condensate flash tank of size and with openings as shown on drawings. Tank shall be ASME constructed and stamped for 125 PSIG.

B. Manufacturers: Cemline, Spirax-Sarco, Wessels, Watson Mcdaniel.

2.4 VACUUM BREAKERS:

SPEC EDITOR: PSIG. IS THIS THE MINIMUM ? 125 0R 150 PSIG ?

A. Brass body, stainless steel retainer tube, ball and spring, rated for 365F, 300 psig.

B. Manufacturers: Hoffman, Spirax-Sarco, Bell & Gossett

SPEC EDITOR: USED TYPICALLY WHEN VENTING STEAM.

2.5 DRIP PAN ELBOWS:

A. Cast iron construction, ASTM A126, Class B, rated for 250psig, 450F.

B. Manufacturers: Keckley, Spence, Spirax-Sarco.

2.6 GATE VALVE - CAST STEEL (FOR USE IN CENTRAL POWER PLANT ONLY):

SPEC EDITOR: USED ONLY IN POWER PLANT WORK.

A. Cast steel body, bolted bonnet, rising stem, seal-welded seat rings, flanged connections, with chromium stainless steel trim, O.S. & Y class 150, type 410 stainless steel hard facing seating surfaces, rated for steam at 1000 F.

B. Valves 10" and larger shall be positively proven to be new with a dated certificate of manufacture from the manufacturer.

C. Manufacturers: Manufacturers: Crane No: 47XU, Stockham No: J1009B8F, Nibco, Grinnell.

2.7 GATE VALVE - CAST IRON (FOR USE AT BUILDING BOILERS ONLY):

SPEC EDITOR: REVISE TO MEET BOILER CODE WITH INTERGRAL DRAIN.

SPEC EDITOR: USED ONLY AT THE DISCHARGE FROM STEAM BOILERS.

A. Cast iron body ASTM A126 class B or class C, bolted bonnet, rising stem, flanged connections, bronze trim with bronze seat rings, nickel plate steel stem, wedge disk type gate, O.S.& Y. class 125.

B. Manufacturers: Crane Fig. 465, Grinnell 6020A, NIBCO F-637-31, Stockham

2.8 GLOBE VALVE:

SPEC EDITOR: ONLY USED FOR STEAM PRV BYPASS.

A. Through 2": 150 pound rated, bronze body, threaded, Teflon disc, rising stem. Manufacturer: Crane No. 7TF, Grinnell No. 3240, Nibco, Stockham B-22-T.

B. 1/2" and larger": 125 pound rated, iron body, bronze trim, renewable seat and disc. Manufacturer: Crane No. 351, Grinnell No. 6200A, Nibco, Stockham G-512.

2.9 SAFETY RELIEF VALVES:

SPEC EDITOR: IF SAFETY RELIEF VALVES ARE REQUIRED, ADD TEXT TO SPECIFICATIONS. USE THIS RELIEF VALVE WITH PRV INSTALLATION. BOILER RELIEF VALVES SHOULD BE SPECIFIED WITH THE BOILER.

SAFETY RELIEF VALVES IN FLASH TANKS - VM/RP TO ADD SPECS.

2.10 PRESSURE REDUCING VALVES:

SPEC EDITOR: VERIFY SECO METAL DISC.

A. Pressure reducing valves shall be single seated, flanged, ASA 250 lb.; cast iron body, stainless steel diaphragm, Seco metal disc, stainless steel stem, and carbon steel main spring. Valves shall be normally closed type and designed for dead end service. Steam velocity through the valve shall be limited to 7,000 fpm.

B. Provide muffling orifice required to limit sound level to 85 dba, 3 feet from the valve.

C. Manufacturers: Armstrong, Leslie, Spirax-Sarco, Spence.

PART 3 - EXECUTION

3.1 PIPING INSTALLATION:

A. See Section 221113 for piping materials and installation requirements.

B. Do not raise gravity condensate return pipe unless authorized by the engineer.

SPEC EDITOR: DRIP LEG AND ALL THE TRAP LOCATIONS SHALL BE INDICATED IN DRAWINGS

C. Drip and Trap: At end of steam mains, at the end of horizontal runs, prior to control valves (where condensate will collect behind valve when closed), at low points (where steam pipe rises in direction of flow), at intervals of no less than 200 feet for continuous pipe, and where noted on the drawings, provide drip leg and connect to gravity condensate return piping through float and thermostatic, minimum 3/4". See drawings for drip size and detail.

3.2 STEAM TRAP SELECTION AND INSTALLATION:

SPEC EDITOR: INSTALLATIONS AND PIPING ARRANGEMENTS VARY WITH EQUIPMENT SERVED, STEAM PRESSURES, TRAP TYPE AND MANY OTHER CONSIDERATIONS. CONSULT MANUFACTURER'S REPRESENTATIVE FOR PROPER APPLICATION AND INSTALLATION DETAILS.

A. Unless noted otherwise, select traps for three times design load for coils, and two times design load for converters. Install steam traps in accessible locations as close as practical to connected equipment. Locate trap below outlet of equipment served to minimize condensate accumulation in equipment. See drawings for installation requirements.

3.3 PRESSURE REDUCING STATION INSTALLATION:

SPEC EDITOR: DRIP PAN ELBOW IS REQUIRED ON RELIEF VALVE INSTALLATION WHERE DISCHARGE MUST GO UP AFTER COMING OUT OF RELIEF VALVE. SHOW ROUTING OD RELIEF VALVE ON DRAWINGS. ROUTE TO SAFE LOCATION, WHERE DISCHARGE WILL NOT POSE A HAZARD TO PEOPLE.

A. Provide single stage PRV stations where indicated and as scheduled on drawings. Each station shall consist of steam pressure reducing valves, strainers, relief valves, isolation gate valves, globe style bypass valves, pressure gauges etc. as detailed.

3.4 BYPASS AND DRAIN INSTALLATION:

SPEC EDITOR: THIS IS USED TO SLOWLY ACTIVATE STEAM LINES, AND TO REDUCE WATER HAMMER. IT IS NOT REQUIRED AT TERMINAL CONNECTION (ABSORPTION CHILLERS). IT IS USED PRIMARILY IN MAIN VALVES. INDICATE REQUIRED LOCATIONS ON DRAWINGS.

A. Provide bypass and drain connection for steam valves 8" and larger. Comply with MSS SP-45 bypass and drain connections.

3.5 PRESSURE REDUCING STATION INSTALLATION:

A. Install drip pan elbow as close as possible to relief valve. Extend drains for drip pan elbow to indirect waste at floor drain.

B. Extend relief valve discharge as indicated on drawings.

C. Set valves to relieve at 15 psig.

D. Properly hang, guide and anchor all related piping to secure the pipe during PRV operation.

3.6 SAFETY RELIEF INSTALLATION:

A. Install in vertical upright position as close as possible to the pressure reducing valve.

B. The installation shall comply with all manufacturer's recommendations.

3.7 FLASH TANK INSTALLATION:

A. Install as detailed and per manufacturer's recommendation.

END OF SECTION 232216

UNIVERSITY OF MICHIGAN
ARCHITECTURE, ENGINEERING AND CONSTRUCTION

ARCHITECTURE & ENGINEERING
326 East Hoover, Mail Stop B
Ann Arbor, MI 48109-1002
Phone: 734-764-3414
Fax: 734-936-3334

BuildingName
The Description of the Project
P00000000 0000

SPECIFICATION DIVISION 23

NUMBER SECTION DESCRIPTION

DIVISION 23 HEATING, VENTILATING AND AIR CONDITIONING (HVAC)
SECTION 232300 - REFRIGERANT PIPING

END OF CONTENTS TABLE

DIVISION 23 HEATING, VENTILATING AND AIR CONDITIONING (HVAC)
SECTION 232300 - REFRIGERANT PIPING

REVISIONS:
8-1-99: CONTENT APPROVED AS NEW MASTER
8-11-99: REVISED TO VBS.DOT TEMPLATE

PART 1 - GENERAL

1.1 RELATED DOCUMENTS

INCLUDE PARAGRAPH 1.1.A AND B IN EVERY SPECIFICATION SECTION. EDIT RELATED SECTIONS 1.1.B TO MAKE IT PROJECT SPECIFIC.

A. Drawings and general provisions of the Contract, Standard General and Supplementary General Conditions, Division 1 Specification Sections, and other applicable Specification Sections including the Related Sections listed below, apply to this Section.

1.2 SCOPE OF WORK

A. Provide refrigerant piping and accessories used for air conditioning applications.

1.3 QUALITY ASSURANCE

A. Regulatory Requirements: Comply with provisions of the following codes:

1. ANSI B31.5: ASME Code for Pressure Piping - Refrigerant Piping.
2. ANSI/ASHRAE Standard 15: Safety Code for Mechanical Refrigeration.
3. ASHRAE Standard 34: Number Designation and Safety Classification of Refrigerants.
4. EPA requirements in Section 608: Prohibition of Venting and Regulation of CFC Requirements

1.4 ACCEPTABLE MANUFACTURES

A. Refrigerant Valves and Specialties: Alco Controls Div., Emerson Electric., ASCO, Danfoss Electronics, Inc., EATON Corporation, Control Div., Henry Valve Company, Parker-Hannifin Corporation, Refrigeration and Air Conditioning Division, Sporlan Valve Company.

PART 2 - PRODUCTS:

2.1 REFRIGERANT PIPING

A. Refer to Section 221113 for piping, fittings, and joints.

2.2 REFRIGERANT VALVES

A. General: Complete valve assembly shall be and designed to conform to ARI 760.

B. Globe: 450 psig maximum operating pressure, 275 deg. F maximum operating temperature; cast bronze body, with cast bronze or forged brass wing cap and bolted bonnet; replaceable resilient seat disc; plated steel stem. Valve shall be capable of being repacked under pressure. Valve shall be straight through or angle pattern, with solder-end connections.

C. Check Valves - Smaller Than 7/8 Inch: 500 psig maximum operating pressure, 300 deg. F maximum operating temperature; cast brass body, with removable piston, Teflon seat, and stainless steel spring; straight through globe design. Valve shall be straight through pattern, with solder-end connections.

D. Check Valves - 7/8 inch and Larger: 450 psig maximum operating pressure, 300 deg. F maximum operating temperature; cast bronze body, with cast bronze or forged brass bolted bonnet; floating piston with mechanically retained Teflon seat disc. Valve shall be straight through or angle pattern, with solder-end connections.

SPEC EDITOR: REVIEW SOLENOID VALVES CAREFULLY, SELECT VOLTAGE AND NORMAL POSITION

E. Solenoid Valves: UL-listed, 250 deg. F temperature rating, 400 psig working pressure; forged brass, with Teflon valve seat, two-way straight through pattern, and solder end connections. Provide manual operator to open valve. Furnish complete with NEMA 1 solenoid enclosure with 1/2 inch conduit adapter, holding coil, voltage to meet controls requirements.

F. Thermal Expansion Valves: thermostatic adjustable, modulating type; size as required for specific evaporator requirements, and factory set for proper evaporator superheat requirements. Valves shall have copper fittings for solder end connections; complete with sensing bulb, a distributor having a side connection for hot gas bypass line, and an external equalizer line.

G. Hot Gas Bypass Valve: adjustable type, sized to provide capacity reduction beyond the last step of compressor unloading; and wrought copper fittings for solder end connections.

H. Charging and Purging Valves:
Manufacturer: Henry Series.

I. Refrigeration Ball Valve:
Manufacturer: Henry Series 900,000

2.3 REFRIGERANT PIPING SPECIALTIES

A. General: Complete refrigerant piping specialty assembly shall be UL-listed and designed to conform to ARI 760.

B. Strainers: 500 psig maximum working pressure; forged brass body with monel 80-mesh screen, and screwed cleanout plug; Y-pattern, with solder end connections.

C. Moisture/liquid Indicators: 500 psig maximum operation pressure, 200 deg. F maximum operating temperature; forged brass body, with replaceable polished optical viewing window, and solder end connections.

SPEC EDITOR: CAREFULLY REVIEW AND EDIT PARAGRAPHS D, E AND F.

D. Filter-driers: 500 psig maximum operation pressure; steel shell, flange ring, and spring, ductile iron cover plate with steel capscrews, and wrought copper fittings for solder end connections. Furnish complete with replaceable filter-drier core kit, including gaskets, as follows:

SPEC EDITOR: SELECT FROM THE FOLLOWING TWO OPTIONS.

1. Standard capacity desiccant sieves to provide micronic filtration.
2. High capacity desiccant sieves to provide micronic filtration and extra drying capacity.

E. Suction Line Filter-Drier: 350 psig maximum operation pressure, 225 deg. F maximum operating temperature; steel shell, and wrought copper fittings for solder end connections. Permanent filter element shall be molded felt core surrounded by a desiccant for removal of acids and moisture for refrigerant vapor.

F. Suction Line Filters: 500 psig maximum operation pressure; steel shell, flange ring, and spring, ductile iron cover plate with steel capscrews, and wrought copper fittings for solder end connections. Furnish complete with replaceable filter core kit, including gaskets, as follows:

G. Flexible Connectors: 500 psig maximum operating pressure; seamless tin bronze or stainless steel core, high tensile bronze braid covering, solder connections, and synthetic covering; dehydrated, pressure tested, minimum 7 inch in length. Manufacturer: Anaconda

PART 3 - EXECUTION

3.1 REFRIGERANT PIPING INSTALLATION

A. General: Install refrigerant piping per Section 221113, and in accordance with ASHRAE Standard 15.

B. Arrange piping to allow normal inspection and servicing of compressor and other equipment. Install valves and specialties in accessible locations to allow for servicing and inspection.

C. Install branch tie-in lines to parallel compressors equal length, and pipe identically and symmetrically.

D. Slope refrigerant piping as follows:

1. Install horizontal hot gas discharge piping with 1/2" per 10 feet downward slope away from the compressor.
2. Install horizontal suction lines with 1/2 inch per 10 feet downward slope to the compressor, with no long traps or dead ends which may cause oil to separate from the suction gas and return to the compressor in damaging slugs.

3. Install traps and double risers where indicated, and where required to entrain oil in vertical runs.
4. Liquid lines may be installed level.

E. Install strainers immediately ahead of each expansion valve, solenoid valve, hot gas bypass valve, compressor suction valve, and as required to protect refrigerant piping system components.

F. Install moisture/liquid indicators in liquid lines between filter/driers and thermostatic expansion valves and in liquid line to receiver.

1. Install moisture/liquid indicators in lines larger than 2-1/8 inch OD, using a bypass line.

G. Install unions to allow removal of solenoid valves, pressure regulating valves, expansion valves, and at connections to compressors and evaporators.

H. Install flexible connectors at the inlet and discharge connection of compressors.

3.2 VALVE INSTALLATION

A. General: Install refrigerant valves where indicated, and in accordance with manufacturer's instructions.

B. Install globe valves on each side of strainers and driers, in liquid and suction lines at evaporators, and elsewhere as indicated.

C. Install a full sized, 3-valve bypass around each drier.

D. Install solenoid valves ahead of each expansion valve and hot-gas bypass valve. Install solenoid valves in horizontal lines with coil at the top.

1. Electrical wiring for solenoid valves is specified in Division 26 and 230900. Coordinate electrical requirements and connections.

E. Thermostatic expansion valves may be mounted in any position, as close as possible to the evaporator.

1. Where refrigerant distributors are used, mount the distributor directly on the expansion valve outlet.
2. Install the valve in such a location so that the diaphragm case is warmer than the bulb.

SPEC EDITOR: VERIFY PROPER LOCATION FOR BULB WITH VALVE MANUFACTURER.

3. Secure the bulb to a clean, straight, horizontal section of the suction line using two bulb straps. Do not mount bulb in a trap or at the bottom of the line.
4. Where external equalizer lines are required make the connection where it will clearly reflect the pressure existing in the suction line at the bulb location.

F. Install pressure regulating and relieving valves as required by ASHRAE Standard 15.

3.3 FIELD QUALITY CONTROL

A. Inspect, test, and perform corrective action of refrigerant piping in accordance with ASME Code B31.5, Chapter VI.

B. Repair leaking joints using new materials, and retest for leaks.

3.4 CLEANING

SPEC EDITOR: THIS ARTICLE IS REQUIRED WHERE OTHER THAN TYPE ACR TUBING IS ALLOWED.

A. Before installation of copper tubing other than Type ACR tubing, clean the tubing and fitting using following cleaning procedure:

1. Remove coarse particles of dirt and dust by drawing a clean, lint free cloth through the tubing by means of a wire or an electrician's tape.
2. Draw a clean, lint free cloth saturated with trichloro-ethylene through the tube or pipe. Continue this procedure until cloth is not discolored by dirt.
3. Draw a clean, lint free cloth, saturated with compressor oil, squeezed dry, through the tube or pipe to remove remaining lint. Inspect tube or pipe visually for remaining dirt and lint.
4. Finally, draw a clean, dry, lint free cloth through the tube or pipe.

3.5 ADJUSTING

A. Verify actual evaporator applications and operating conditions, and adjust thermostatic expansion valve to obtain proper evaporator superheat requirements.

B. Adjust controls and safeties. Replace damaged or malfunctioning controls and equipment with new materials and products.

3.6 CHECK, TEST AND START-UP

A. Charge system using the following procedure:

1. Install core in filter dryer after leak test but before evacuation.
2. Evacuate refrigerant system with vacuum pump; until temperature of 35 deg F is indicated on vacuum dehydration indicator.
3. During evacuation, apply heat to pockets, elbows, and low spots in piping.
4. Maintain vacuum on system for minimum of 5 hours after closing valve between vacuum pump and system.
5. Break vacuum with refrigerant gas, allowing pressure to build up to 2 psi.
6. Complete charging of system, using new filter dryer core in charging line. Provide full operating charge.

B. Train Owner's maintenance personnel on procedures and schedules related to start-up and shut-down, troubleshooting, servicing, and preventative maintenance of refrigerant piping valves and refrigerant piping specialties.

END OF SECTION 232300

UNIVERSITY OF MICHIGAN
ARCHITECTURE, ENGINEERING AND CONSTRUCTION

ARCHITECTURE & ENGINEERING
326 East Hoover, Mail Stop B
Ann Arbor, MI 48109-1002
Phone: 734-764-3414
Fax: 734-936-3334

BuildingName
The Description of the Project
P00000000 0000

SPECIFICATION DIVISION 23

NUMBER SECTION DESCRIPTION

DIVISION 23 HEATING, VENTILATING AND AIR CONDITIONING (HVAC)
SECTION 232513 – CHEMICAL WATER TREATMENT, CLOSED LOOP WATER SYSTEMS

END OF CONTENTS TABLE

DIVISION 23 HEATING, VENTILATING AND AIR CONDITIONING (HVAC)
SECTION 232513 – CHEMICAL WATER TREATMENT, CLOSED LOOP WATER SYSTEMS

SPEC EDITOR: THE CHILLED WATER SYSTEM AT UNIVERSITY HOSPITAL IS A HYBRID CLOSED/OPEN LOOP SYSTEM; THIS SPECIFICATION MUST BE SPECIALLY MODIFIED WHEN USED FOR WORK ON THAT SYSTEM. CONTACT THE U-M DESIGN MANAGER FOR DIRECTION.

JAN. 2017: ADDED U.S. WATER AS APPROVED CSP PER STM/HYDRONICS MTT. D. KARLE

SEPT. 2017: REMOVED GE WATER AS APPROVED CSP PER HYDRONICS AND STEAM MTT DUE TO POOR SERVICE. D. KARLE

PART 1 - GENERAL

1.1 RELATED DOCUMENTS

INCLUDE PARAGRAPH 1.1.A AND B IN EVERY SPECIFICATION SECTION. EDIT RELATED SECTIONS 1.1.B TO MAKE IT PROJECT SPECIFIC.

A. Drawings and general provisions of the Contract, Standard General and Supplementary General Conditions, Division 1 Specification Sections, and other applicable Specification Sections including the Related Sections listed below, apply to this Section.

SPEC EDITOR: IN 1 AND 2 BELOW, SELECT PROPER SPEC SECTION NUMBER BY PROJECT. DELETE SUSTAINABLE DESIGN / LEED IF NOT APPLICABLE TO THE PROJECT.

B. Related Sections:

1. Section 018113 - Sustainable Design Requirements
2. Section 019110/019100 - Facilities Commissioning
3. Section 220500 - Common Work Results for Mechanical
4. Section 221113 - Piping Materials and Methods
5. Section 220523 - Valves
6. Section 220519 – Thermometers, Pressure Gauges, and Accessories
7. Section 220553 - Mechanical Identification
8. Section 220719 - Mechanical Systems Insulation

1.2 SUMMARY

A. Products specified in this section include the following:

1. Chemical Inhibitors for Water
2. Chemicals for Inhibitors and cleaning
3. Shot Feeder
4. Corrosion Coupon Rack
5. Glycol Feed System
6. Ethylene Glycol

B. Provide a Chemical Services Provider (CSP) to perform the services described below.

C. Provide water treatment products and services including:

1. Chemicals for cleaning, passivation, and treatment of each system.
2. On-going treatment, chemicals, testing, certification, and reports to demonstrate effective water treatment is maintained at all times.
3. Start-up and operation of chemical treatment equipment.

D. Provide a complete chemical water treatment program during construction for all new and reused piping networks. This program shall begin from the point each system is filled during construction and extend until Substantial Completion or final Owner acceptance of each system, whichever occurs later. The program shall include water analysis, chemicals, testing, equipment, consulting and service for the following systems:

1. Heating Hot Water System
2. Chilled Water System
3. Dual Temperature Water System
4. Process Cooling System
5. Glycol System
6. All other closed loop systems

E. Attend project meetings as required to plan, schedule and coordinate above activities with other project contractors and the Owner.

F. Provide recommended testing procedures and chemical treatment schedule for Owner's personnel. This information shall be submitted to the owner in a Program Administration Manual.

1.3 SUBMITTALS

A. Product Data: Include rated capacities; water-pressure drops; shipping, installed, and operating weights; and complete data on furnished products listed below:

1. Shot Feeders
2. Coupon Racks
3. Glycol Feed System
4. Flow Indicators
5. Valves
6. Product specifications and MSDS’s for each chemical used
7. Cleaning Procedures
8. Passivation Procedures
9. Chemical Treatment Procedures
10. Shop Drawings

B. Shop Drawings to include detailed equipment assemblies indicating dimensions, weights, loads, required clearances, method of field assembly, components, and the location and size of each field connection as necessary to assist the mechanical contractor with proper system installations

C. Submit resume of water treatment personnel and name of Chemical Services Provider.

D. Service Reports as indicated under Part 2 below.

1.4 QUALITY ASSURANCE

A. Manufacturers and Products: The products and manufacturers specified in this Section establish the standard of quality for the Work. Subject to compliance with all requirements, provide specified products from the manufacturers named in Part 2.

B. Products in this section shall be built, tested, and installed in compliance with the specified quality assurance standards; latest editions, unless noted otherwise.

1. American Society for Testing and Materials (ASTM)
   a. D859 – Test Method for Silica in Water
   b. D1067 – Test Methods for Acidity/Alkalinity in Water
   c. D1068 – Test Methods for Iron in Water
   d. D1126 – Test Method for Hardness in Water
   e. D3370 – Practices for Sampling Water from Closed Conduits
   f. D4012 - Test Method for Adenosine Triphosphate (ATP) Content of Microorganisms in Water
   g. D5465 - Practice for Determining Microbial Colony Counts from Waters Analyzed by Plating Methods

C. Conform to all applicable Codes, Regulations, and Municipal requirements for the use and disposal of chemicals (including cleaning compounds) and waste to public sewer systems.

1. Wastewater shall be discharged to the sanitary sewer only if it has a pH between 5.0 and 10.0 and meets the requirements of the City of Ann Arbor Sewer Use Ordinance. For wastewater not meeting such criteria, contact U-M Occupational Safety and Environmental Health (OSEH) Hazmat at 734-763-4568 for proper disposal instructions. City of Ann Arbor Sewer Use Limitations can be found at the following website: http://www.municode.com/resources/gateway.asp?pid=11782&sid=22 or by contacting U-M OSEH Environmental Protection & Permitting Program (EP3) at 734-936-1920
2. Glycols (of any type) shall not be discharged to the sanitary sewer. Contact U-M OSEH HazMat at 734-763-4568 for proper disposal instructions.

D. Wastewater containing any chemical or sediment is prohibited from discharge to the storm water system. No chemical shall contain Chromates or Inorganic Phosphates.

1.5 DELIVERY, STORAGE, AND HANDLING

A. Package for delivery to best protect finished surfaces while using the least amount of single-use packaging as possible. Deliver equipment and components adequately packaged for lifting, skidding, or rolling into final position, according to manufacturer's instructions. If possible, package and ship products using reusable blankets and fabrics, or reusable cardboard and crate systems.

B. Store materials and equipment raised off the floor on pallets and protected with coverings to prevent damage due to weather and construction activities. Store in areas that prevent damage due to freezing and extreme temperatures or sunlight. Arrange coverings to provide air circulation to avoid damage from condensation or chemical build-up. Protect from damage, dirt and debris at all times.

C. Store chemicals in curb protected area. Such secondary containment areas must have the capacity to hold the volume of the largest container or 10% of the combined containers, whichever larger. If room has no floor drains, then the room itself may be considered sufficient secondary containment. If the room is considered the secondary containment ensure there is a lip at the door so no liquids can exit the room in the event of a leak. Verify field conditions before storing any chemicals

1. Provide temporary containment areas when permanent containment areas do not exist. Remove temporary containment at the end of construction.

1.6 WARRANTY

A. Provide a complete warranty for parts and labor for a minimum of one year from the date of Substantial Completion. This warranty does not include ongoing chemical treatment or monitoring.

1.7 ACCEPTABLE CHEMICAL SERVICE PROVIDERS (CSPS)

A. Approved CSPs

1. Chemtreat
2. Crown Solutions
3. Kroff
4. Mitco
5. Nalco
6. Rochester Midland
7. U.S. Water Services

PART 2 - PRODUCTS

2.1 GENERAL

A. CSP Services:

1. The CSP shall provide all cleaning and treatment chemicals, basic services, testing, equipment and materials necessary for a complete water treatment program.
2. The CSP shall perform an analysis of the supply water to determine the type and quantities of chemical treatment needed to maintain the required water quality to prevent corrosion, scaling, and biological growth. The CSP will at minimum provide weekly site visits to verify proper water treatment for the first month after any system or part of a system is treated. Provide monthly visits thereafter, or more often if required to assure performance requirements are being met, to analyze water samples, inspect equipment, and add additional chemicals as required to maintain proper water treatment, until final written Owner acceptance of the respective system.

3. At each site visit CSP shall analyze each system for corrosion inhibitors, pH, total iron, total copper, bacteria levels (provide monthly analytical laboratory analysis), and conductivity; inspect loss from corrosion coupons (provide analytical laboratory analysis every three months), record make-up meter readings, and perform any other tests necessary to validate that corrosion, scale, and organic growth is being prevented.
4. Reports:
    a. Submit a written startup test report for each system placed into service.
    b. A service report shall be prepared on site by the CSP, submitted at the time of each service visit (with copies immediately provided to the Owner and Commissioner), which shall include all required test results and recommendations.
    c. Additionally, provide final reports for approval to the Owner and Commissioner regarding each site service visit, certified by an Officer of the CSP, within one week of any water treatment activity. Such reports shall include the results of any field or lab tests. Reports shall clearly state if the required water quality and maximum corrosion rates are being achieved.
    d. At a minimum, each report shall include the following information:
        1) System Treated:
        2) Date
        3) Conductivity
        4) pH
        5) Total Iron
        6) Total Copper
        7) Bacteria(cfu) (monthly analytical laboratory analysis)
        8) Coupon Corrosion Rates (three month analytical laboratory analysis)
        9) Make-up Water Quantity since Last Visit
        10) Corrosion Inhibitor level (ppm)
        11) Silica level (ppm)
5. Conduct final on-site system turn over meeting with Owner and Commissioner. Present final validation report demonstrating that performance requirements have been achieved and that each system is currently properly treated.
6. When required by Part 3, train Owner's maintenance personnel in water treatment procedures.
7. Program Administration Manual:
    a. The CSP shall provide the Owner with two (2) Program Administration Manuals including sections covering program control, testing requirements, in plant logs, safety data and system information. Each section shall include the following:
        1) Program Control: Include a complete program outline with chemical descriptions, control ranges, and required action for “out of range” situations. Also include complete ordering instructions with applicable account numbers and phone numbers.

2) Testing Requirements: This section will include basic testing practices as well as detailed test instructions for each test to be performed.
3) In-Plant Logs: Include detailed testing log sheets for each system to be tested including room to record one (1) month's data on one (1) sheet and a section to log chemical inventory.
4) Safety Data: Include the CSP's 24-hour toll free safety hotline number as well as MSDS sheets for each chemical used.
5) System Information: Include any equipment manuals and related information.

2.2 TREATMENT PROGRAM – FLUSHING AND CLEANING

A. Cleaning chemicals shall be non-phosphate and non-acidic.

B. Flush and clean all new and reused piping.

C. Provide a flush/clean plan for approval. Provide and later remove all temporary bypasses, drains, vents, etc. required to flush and clean the system. Temporary components for flushing and cleaning are not indicated on the drawings.

D. Flush and clean systems per the general procedures specified in Related Sections; clean systems per the approved cleaning procedures submitted under this specification section. Provide and install all required cleaning chemicals.

E. Verify that adequate cleaning chemical was added, that cleaning was effective, and test that cleaning chemicals were properly rinsed from the system. Provide a report certifying that cleaning and rinsing, was properly executed.

F. Provide passivation and chemical treatment immediately after each system has been cleaned and flushed. Systems shall not stand filled with fluids for periods longer than 48 hours without beginning flushing and cleaning which shall immediately be followed by the passivation and chemical treatment procedures.

2.3 TREATMENT PROGRAM – CHEMICAL TREATMENT AND PASSIVATION

A. Provide passivation and chemical treatment per the approved chemical treatment procedures. Chemically treat new and reused piping networks using chemicals and treatment procedures compatible with the system being cleaned and the chemical treatment chemicals in existing piping systems being connected to. Test existing piping systems or otherwise determine chemical treatment in existing piping and validate compatibility. Note that existing systems may be silica based, adjust water treatment program accordingly.

SPEC EDITOR: WHEN CONNECTING INTO EXISTING ACTIVE SYSTEMS, DEVELOP A COORDINATION PLAN IN CONSULTATION WITH U-M PLANT AND REVISE THE BELOW SAMPLE PARAGRAPH ACCORDINGLY. THIS SPECIFICATION REQUIRES POLYMER BASED INHIBITORS, EXISTING SYSTEMS MAY BE SILICA BASED. IT MAY BE DESIRABLE TO CONVERT THE EXISTING PIPING NETWORK TO POLYMER BASED AS A PART OF YOUR PROJECT.

B. When connecting into active existing systems, treat piping networks installed or reused by the project and verify by lab analysis that the treatment levels per the treatment plan have been attained prior to connecting into the existing active system. Submit validating report for approval.

1. Do not connect into existing active system until report is approved by Owner.
2. Provide temporary valves, piping, and accessories as required to treat the project's piping prior to connection to the active system.

C. Provide passivation/chemical treatment at system startup or immediately upon operation of a system for temporary cooling and heating, whichever comes first.

D. Provide chemical treatment immediately after each system has been cleaned and flushed. Thereafter immediately begin the approved water treatment maintenance program to passivate and prevent corrosion, scale, and organic growth and to maintain treatment chemical levels. Note that systems or parts of systems will not typically be started at the same time; adjust treatment strategy accordingly.

E. Provide chemicals that comply with State and Federal regulations.

F. Chemical inhibitor shall be polymer based and contain azole in an amount appropriate for the percentage of internal copper surface area of the system piping. Provide products with PTSA (p-Toluenesulfonic acid) florescent tracer dyes. Molybdenum shall not be used as a tracer. Optionally, for hot water heating systems only, nitrite/azole based inhibitors may be used.

G. No chemicals shall contain chromates or inorganic phosphates.

H. Utilize non-oxidizing biocides in the event sterilization is required.

I. Adjust chemical concentrations as required to achieve the required performance

2.4 PERFORMANCE REQUIREMENTS

A. The water treatment programs proposed by the CSP shall maintain corrosion rates below 0.5 mils per year for mild steel and 0.1 mils per year for copper. These rates shall be verified with corrosion coupons provided by the CSP Coupons shall be analyzed in the CSP's analytical laboratory every three months, more often if required, to assure these levels are not exceeded.

B. Microbiological growth levels shall be maintained below 10,000 cfu's aerobic bacteria and 10 cfu's anaerobic bacteria. The CSP shall perform detailed microbiological culturing at the CSP's company's analytical laboratory monthly, more often if required, to assure these levels are not exceeded

2.5 EQUIPMENT

A. Provide all components required for a fully operational water treatment system. Provide components that are not adversely affected by the treatment chemicals employed.

CHEMICAL SHOT FEEDERS: OTHER MFR.S OF SHOT FEEDERS SUCH AS WINGERT AND VECTOR OFFER ONLY QUARTER-TURN STYLE TOPS WHICH U-M PLANT HAS DETERMINED TO BE UNSAFE. IF OTHER MFR.S CAN BE FOUND THAT INCLUDE ALL THE FEATURES LISTED BELOW, THEY MAY BE ADDED AS ACCEPTABLE MFR.S.

B. Chemical Shot Feeders:

1. Acceptable Manufacturers:
   a. Neptune
2. Provide shot feeders for each system. Provide steel 5-gallon minimum tank with interior and exterior epoxy coating, removable screwed and gasketed top (4" diam. minimum), pipe threaded inlet and outlet, dish bottom style with floor skirt, rated at 200 psi, 200°F.

C. Corrosion Coupon Rack:

1. Acceptable Manufacturers:
   a. Cannon Water Technology
   b. J.L. Wingert
   c. Vector Industries
2. Supply for each corresponding shot feeder:
   a. Chilled water: ¾" stainless steel coupon rack, with two coupon holders, inlet/outlet 316 stainless steel full port ball valves, and a ¼" sample valve. Include a 0-5 gpm nominal range variable area flow meter, rated 150 psig at 70°F, with graduated polysulfone or acrylic cylinder, with an accuracy of +/-5%. Provide mild steel and copper coupons.
   b. Heating hot water and dual temperature systems: ¾" stainless steel coupon rack, with two coupon holders, inlet/outlet 316 stainless steel full port ball valves, and a ¼" sample valve. Include a 0-5 gpm nominal range variable area flow meter, rated 100 psig at 250°F, graduated glass cylinder with stainless steel or brass connections, with an accuracy of +/-2%. Provide mild steel and copper coupons.

SPEC EDITOR: GLYCOL FEED SYSTEMS MUST BE INSTALLED WITHIN A CONTAINMENT AREA, CONTACT U-M DESIGN MANAGER FOR SPECIFIC REQUIREMENTS.

D. Glycol Feed System:

1. Acceptable Manufacturers:
   a. J.L. Wingert Co.
   b. Neptune Chemical Pump Co.
   c. Advantage Controls Inc.
   d. Wessels Co.
2. Provide a floor mounted packaged glycol feed system that is pre-wired and pre-plumbed, and includes a storage tank, control panel, controls, pump, piping, and valves, all supported on a steel frame.
3. Provide a 50-gallon minimum translucent polyethylene single wall tank with polyethylene cover. Minimum ¼ inch thick walls.

4. Provide a welded steel stand suitable for floor mounting and painted with two coat system consisting of oxide primer and alkyd enamel finish. Provide holes in the base for the installation of anchor bolts and leveling of equipment.
5. Provide a bronze gear pump, 120 V, single phase, and rated for a minimum of 1.5 gpm at 90 psig.
6. Valves and Piping: Pump suction shall include ball valve and Y-strainer. Pump discharge shall include silent check valve, pressure switch, pressure gauge, and 150 psi relief valve piped back to tank. All piping shall be Type L Copper. Connect pump suction and discharge with braided stainless steel or bronze flex connectors. All piping, valves and accessories shall conform to Related Sections.
7. Provide a NEMA 4X control panel with 8 foot, 120 V grounded power cord. Equip the panel with motor starter, 2-position main power switch with light, hand /off/ auto switch with light for gear pump, low level red light, low level audible alarm with push button silence switch, dry contacts for remote monitoring of alarm, and a 15 amp fuse.

SPEC EDITOR: PROVIDE THE PRESSURE SWITCH RANGE AND SET POINT EITHER IN THE BELOW PARAGRAPH OR ON THE PROJECT DRAWINGS.

8. Provide an adjustable pressure switch, selected with a range to match system operating pressure.
9. Provide electrical components that conform to Division 26 requirements. Provide all wiring in conduit. Loose, exposed or unprotected wire is not acceptable

SPEC EDITOR: REVISE CONCENTRATION IN ARTICLE BELOW AS REQUIRED: AT MINUS 15°F, A CONCENTRATION OF 30% IS RECOMMENDED FOR BURST PROTECTION, 45% FOR FREEZE PROTECTION. FREEZE PROTECTION CONCENTRATIONS ALLOW FLUID TO BE PUMPED. EDITOR SHOULD CAREFULLY DETERMINE IF THE CONCENTRATION IS FOR BURST PROTECTION OR FREEZE PROTECTION. AVOID SPECIFYING EXCESS CONCENTRATIONS SINCE FLUID HEAT TRANSFER RATE DECREASES AS CONCENTRATION INCREASES.

DO NOT SPECIFY ETHYLENE GLYCOL FOR SNOW MELTING SYSTEMS; USE PROPYLENE GLYCOL.

2.6 PREMIXED INHIBITED ETHYLENE GLYCOL

A. Acceptable Manufacturer and Product:

1. Dow Chemical – Dowtherm SR-1

B. Provide for hydronic systems as indicated on the drawings.

C. Provide inhibited ethylene glycol, factory pre-mixed with water at a concentration of 30% by volume Dowtherm SR1.

PART 3 - EXECUTION

3.1 EXAMINATION AND PREPARATION

A. Pre-Treatment Conference: Prior to treatment activities, meet with the Project Engineer, Commissioner and contractors to verify treatment procedures, discuss coordination with existing piping networks, and to coordinate treatment activities with construction schedule.

B. Flush and clean systems per Related Sections and Part 2 above.

3.2 INSTALLATION

A. Install all required components, and chemically passivate/treat and maintain the system as described in Part 2.

B. Use and dispose of chemicals and wastewater (including from existing piping networks) per the Quality Assurance section of this specification. All costs of disposal shall be borne by the contractor.

C. Provide and install all chemicals and all incidental components. Install equipment at locations shown on the Drawings. Follow the manufacturer's installation and startup instructions.

D. Passivate and chemically treat each system immediately after it has been cleaned and flushed.

E. Install shot feeders with openings no higher than 4' above finished floor. Pipe shot feeder drain to nearest floor drain. Install top coupon of corrosion coupon rack no higher than 6' above finished floor.

> ***SPEC EDITOR: SOME PROJECTS, SUCH AS HOSPITAL PROJECTS, MAY DESIRE THAT WATER TREATMENT SERVICES CONTINUE BEYOND SUBSTANTIAL COMPLETION, E.G. A ONE OR MORE YEAR SERVICE CONTRACT. CONTACT THE U-M DESIGN MANAGER FOR DIRECTION, AND IF NEEDED, REVISE THE PARAGRAPH BELOW TO INCLUDE THAT REQUIREMENT.***

F. The treatment program shall begin at system start-up or immediately upon first operation of the system by the contractor for temporary heating and cooling, whichever comes first. Continue the program until Substantial Completion.

3.3 INSTALLATION OF PREMIXED INHIBITED ETHYLENE GLYCOL SYSTEM

A. Following system flushing and cleaning, drain the entire piping system. Add premixed ethylene glycol/inhibitor solution into the system. Circulate system fluid, adding additional pre-mixed glycol/inhibitor as required until all air is purged from the system.

B. Sample fluid, measure concentration of glycol and inhibitor. Drain system fluid as required and add additional pre-mixed solution to achieve the design concentration of glycol and the manufacturer's recommended concentration of inhibitor. Submit report of activities, including volumes of all fluids used.

3.4 INSTALLATION OF GLYCOL FEED SYSTEM

A. Level and bolt Glycol Feed System to the floor within the containment area. Support all piping and conduits independent of the Glycol Feed Unit.

3.5 FIELD QUALITY CONTROL:

A. The CSP shall:

1. Verify that systems and equipment have been properly cleaned, flushed, and filled with water, and are fully operational before introducing operational chemicals for water-treatment systems.
2. Introduce and maintain chemical treatment to achieve the specified performance requirements.
3. Submit a written startup test report for each system placed into service.
4. Provide validation testing and required reports.
5. Attend final on-site system turn over meeting with Owner and Commissioner. Present final validation report demonstrating that performance requirements have been achieved and that each system is currently properly treated.

3.6 COMMISSIONING:

A. Perform Commissioning activities per Related Sections above.

SPEC EDITOR: CONSULT WITH THE U-M DESIGN MANAGER TO DETERMINE IF TRAINING IS DESIRED FOR YOUR PARTICULAR PROJECT; KEEP OR DELETE OR MODIFY THE ARTICLE BELOW ACCORDINGLY.

3.7 OWNER TRAINING

A. CSP shall train Owner's maintenance personnel on equipment operation, adding and maintaining proper chemical levels, trouble-shooting, servicing and preventative maintenance procedures. Do not conduct training until after start up and commissioning is completed. Provide training using documents including the Program Administration Manual and the approved Operations and Maintenance manuals. Provide these documents to the Owner at least two weeks prior to the training to allow sufficient time for review.

1. Provide 2 hours training minimum.

B. Schedule training at least 7 days in advance, at date and time approved by Owner.

END OF SECTION 232513

UNIVERSITY OF MICHIGAN
ARCHITECTURE, ENGINEERING AND CONSTRUCTION

ARCHITECTURE & ENGINEERING
326 East Hoover, Mail Stop B
Ann Arbor, MI 48109-1002
Phone: 734-764-3414
Fax: 734-936-3334

BuildingName
The Description of the Project
P00000000 0000

SPECIFICATION DIVISION 23

NUMBER SECTION DESCRIPTION

DIVISION 23 HEATING, VENTILATING AND AIR CONDITIONING (HVAC)
SECTION 232516 – CHEMICAL WATER TREATMENT – OPEN LOOP SYSTEMS

END OF CONTENTS TABLE

DIVISION 23 HEATING, VENTILATING AND AIR CONDITIONING (HVAC)
SECTION 232516 – CHEMICAL WATER TREATMENT - OPEN LOOP SYSTEMS

NEW MARCH 2013.

THIS SPECIFICATION IS DESIGNED FOR CHILLED WATER COOLING TOWER CONDENSER WATER SYSTEMS AND MAY NEED REVISION IF USED FOR OTHER OPEN LOOP SYSTEMS, SUCH AS EVAPORATIVE COOLERS AND AIR WASHERS.

THE CHILLED WATER SYSTEM AT UNIVERSITY HOSPITAL IS A HYBRID CLOSED/OPEN LOOP SYSTEM; THIS SPECIFICATION MUST BE SPECIALLY MODIFIED WHEN USED FOR WORK ON THAT SYSTEM. CONTACT THE U-M DESIGN MANAGER FOR DIRECTION.

ADDED SPEC FOR INJECTION QUILL. D. KARLE FOR HYDRONICS MTT 6/17/2013.

ENHANCED THE DESCRIPTION OF BROMINE TABLETS PER RECOMMENDATION FROM M. WILLET AND M. MAU. D. KARLE 9-5-2013.

JAN. 2017: ADDED U.S. WATER AS APPROVED CSP PER STM/HYDRONICS MTT. D. KARLE

SEPT. 2017: REMOVED GE WATER AS APPROVED CSP PER HYDRONICS AND STEAM MTT DUE TO POOR SERVICE. D. KARLE

PART 1 - GENERAL

1.1 RELATED DOCUMENTS

INCLUDE PARAGRAPH 1.1.A AND B IN EVERY SPECIFICATION SECTION. EDIT RELATED SECTIONS 1.1.B TO MAKE IT PROJECT SPECIFIC.

A. Drawings and general provisions of the Contract, Standard General and Supplementary General Conditions, Division 1 Specification Sections, and other applicable Specification Sections, in particular the Related Sections listed below, apply to this Section.

IN 1 AND 2 BELOW, SELECT PROPER SPEC SECTION NUMBER BY PROJECT. DELETE SUSTAINABLE DESIGN / LEED IF NOT APPLICABLE TO PROJECT. DELETE COMMISSIONING IF NOT APPLICABLE TO PROJECT.

B. Related Sections:

1. Section 019110/019100 - Commissioning
2. Section 220500 - Common Work Results for Mechanical
3. Section 221113 - Piping Materials and Methods
4. Section 220523 - Valves
5. Section 220553 - Mechanical Identification
6. Section 230900 – Mechanical Systems Controls
7. Section 26 – Electrical

1.2 SUMMARY

A. Products for chemical water treatment systems specified in this section include the following:

1. Chemical Inhibitors and Biocides for Water
2. Motor Operated Ball Valves
3. Chemical Feed Pumps
4. Bromine Feeder Tank
5. Chemical Treatment Controller with Conductivity Probe and flow switch.
6. Corrosion Coupon Rack
7. Solid Corrosion Inhibitor Dissolver
8. Clear Plastic Strainers
9. Flow Indicators
10. Ball Valves
11. Injection Quill Assembly
12. Chemical Solution Tubing

B. Provide a Chemical Services Provider (CSP) to perform the services described below.

C. Provide water treatment products and services including:

1. Chemicals for cleaning, passivation, and treatment of each system.
2. On-going treatment, chemicals, testing, certification, and reports to demonstrate effective water treatment is maintained at all times.
3. Start-up and operation of chemical treatment equipment.

D. Provide a complete chemical water treatment program during construction for all new and reused piping networks. This program shall begin from the point each system is filled during construction and extend until Substantial Completion or final Owner acceptance of each system, whichever occurs later. The program shall include water analysis, chemicals, testing, equipment, consulting and service for the following systems:

REVISE BELOW, THE SYSTEMS COVERED BY THIS SPEC FOR YOUR PARTICULAR PROJECT.

1. Chilled Water Condenser Water System

E. Attend project meetings as required to plan, schedule and coordinate above activities with other project contractors and the Owner.

F. Provide recommended testing procedures and chemical treatment schedule for Owner's personnel. This information shall be submitted to the owner in a Program Administration Manual.

1.3 SUBMITTALS

A. Product Data: Include rated capacities; water-pressure drops; shipping, installed, and operating weights; and complete data on furnished products listed below:

1. Product specifications and MSDS’s for each chemical used
2. Cleaning Procedures
3. Passivation Procedures
4. Chemical Treatment Procedures

5. Motor Operated Ball Valves
6. Chemical Feed Pumps
7. Bromine Feeder Tank and Piping Kit
8. Chemical Treatment Controller with Conductivity Probe
9. Corrosion Coupon Rack
10. Solid Corrosion Inhibitor Dissolver
11. Clear Plastic Strainers
12. Flow Indicators
13. Ball Valves
14. Injection Quill
15. Chemical Solution Tubing
16. PVC back-board

B. Schematic diagram of the water treatment system showing the arrangement of all components and piping connections.

C. Project specific wiring diagram reflecting wiring between all devices and connections to Owner's monitoring system.

D. Details regarding the construction, support, and arrangement of devices on the PVC back-board.

E. Submit resume of water treatment personnel and name of Chemical Services Provider.

1. Provide a current copy of CSPs State of Michigan Commercial Pesticide Applicators Category 5B certification.

F. Service Reports as indicated under Part 2 below.

G. Sequence of Operation: Provide a written sequence of operation detailing the operation of the chemical treatment system.

H. Program Administration Manual.

I. Passivation Confirmation Report(provide when passivation is specified): Verify passivation of galvanized-steel surfaces, and confirm this observation in a written report to the Architect and Construction Manager.

J. Shop Drawings to include detailed equipment assemblies indicating dimensions, weights, loads, required clearances, method of field assembly, components, and the location and size of each field connection as necessary to assist the mechanical contractor with proper system installations.

1.4 QUALITY ASSURANCE

A. Manufacturers and Products: The manufacturer listed as the "Basis of Design" establishes the standard of quality that shall be provided for the Work. Subject to compliance with all requirements indicated and the features provided by the Basis of Design, provide specified products from the manufacturers named in Part 2.

B. Products in this section shall be built, tested, and installed in compliance with the specified quality assurance standards; latest editions, unless noted otherwise.

1. American Society for Testing and Materials (ASTM)
   a. D859 – Test Method for Silica in Water
   b. D1067 – Test Methods for Acidity/Alkalinity in Water

c. D1068 – Test Methods for Iron in Water
d. D1126 – Test Method for Hardness in Water
e. D4012 - Test Method for Adenosine Triphosphate (ATP) Content of Microorganisms in Water
f. D5465 - Practice for Determining Microbial Colony Counts from Waters Analyzed by Plating Methods

2. NFPA 70 National Electric Code

C. CSP shall be currently certified by the State of Michigan for Commercial Pesticide Application Category 5B.

D. Chemicals shall comply with all Federal, State and Local/Municipal requirements as defined by the governing agencies.

E. Conform to all applicable Codes, Regulations, and Municipal requirements for the use and disposal of chemicals (including cleaning compounds) and waste to public sewer systems.

1. Wastewater shall be discharged to the sanitary sewer only if it has a pH between 5.0 and 10.0 and meets the requirements of the City of Ann Arbor Sewer Use Ordinance. For wastewater not meeting such criteria, contact U-M Occupational Safety and Environmental Health (OSEH) Hazmat at 734-763-4568 for proper disposal instructions.
2. City of Ann Arbor Sewer Use Limitations can be found at the following Ann Arbor City website: http://www.municode.com/resources/gateway.asp?pid=11782&sid=22 or by contacting U-M OSEH Environmental Protection & Permitting Program (EP3) at 734-936-1920.
3. Contact U-M OSEH HazMat at 734-763-4568 for special disposal requirements and proper disposal instructions.
4. Wastewater containing any chemical or sediment is prohibited from discharge to the storm water system. No chemical shall contain Chromates or Inorganic Phosphates.

1.5 DELIVERY, STORAGE, AND HANDLING

A. Package for delivery to best protect finished surfaces while using the least amount of single-use packaging as possible. Deliver equipment and components adequately packaged for lifting, skidding, or rolling into final position, according to manufacturer's instructions. If possible, package and ship products using reusable blankets and fabrics, or reusable cardboard and crate systems.

B. Store materials and equipment raised off the floor on pallets and protected with coverings to prevent damage due to weather and construction activities. Store in areas that prevent damage due to freezing and extreme temperatures or sunlight. Arrange coverings to provide air circulation to avoid damage from condensation or chemical build-up. Protect from damage, dirt and debris at all times.

C. Store chemicals in curb protected area. Such secondary containment areas must have the capacity to hold the volume of the largest container or 10% of the combined containers, whichever larger. If room has no floor drains, then the room itself may be considered sufficient secondary containment. If the room is considered the secondary containment ensure there is a lip at the door so no liquids can exit the room in the event of a leak. Verify field conditions before storing any chemicals

1. Provide temporary containment areas when permanent containment areas do not exist. Remove temporary containment at the end of construction.

1.6 WARRANTY

A. Provide a complete warranty for parts and labor for a minimum of one year from the date of Substantial Completion. This warranty does not include ongoing chemical treatment or monitoring.

1.7 ACCEPTABLE CHEMICAL SERVICE PROVIDERS (CSP)

A. Approved CSPs

1. Chemtreat
2. Crown Solutions
3. Kroff
4. Mitco
5. Nalco
6. Rochester Midland
7. U.S. Water Services

PART 2 - PRODUCTS

2.1 GENERAL

A. CSP Services:

1. The CSP shall provide all cleaning and treatment chemicals, basic services (including set-up and programming of all water treatment control devices), testing, equipment and materials necessary for a complete water treatment program.
2. The CSP shall perform an analysis of the supply water to determine the type and quantities of chemical treatment needed to maintain the required water quality to prevent corrosion, scaling, and biological growth. The CSP will at minimum provide weekly site visits to verify proper water treatment after any system or part of a system is treated. Weekly visits shall be conducted to assure performance requirements are being met, analyze water samples, inspect equipment, and adjust feed rates as required to maintain proper water treatment, and continue until final written Owner acceptance of the respective system.

3. At each site visit CSP shall analyze each system for corrosion inhibitors, pH, total iron, total copper, bacteria levels (provide analytical laboratory analysis monthly) and conductivity; inspect loss from corrosion coupons (provide analytical laboratory analysis monthly), record make-up meter readings, and perform any other tests necessary to validate that corrosion, scale, and organic growth is being prevented.
4. Reports:
    a. Submit a written startup test report for each system placed into service.
    b. A service report shall be prepared on site by the CSP, submitted at the time of each service visit (with copies immediately provided to the Owner and Commissioner), which shall include all required test results and recommendations.
    c. Additionally, provide final reports for approval to the Owner and Commissioner regarding each site service visit, certified by an Officer of the CSP, within one week of any water treatment activity. Such reports shall include the results of any field or lab tests. Reports shall clearly state if the required water quality and maximum corrosion rates are being achieved.
    d. At a minimum, each report shall include the following information (levels shall be reported in ppm unless noted otherwise):
        1) System Treated
        2) Date
        3) Conductivity (microsiemens)
        4) pH
        5) Total Iron
        6) Total Copper
        7) Coupon Corrosion Rates (monthly analytical laboratory analysis)
        8) Make-up Water Quantity Since Last Visit
        9) Corrosion Inhibitor Level
        10) Silica Level
        11) Biocide Level
        12) "P" Alkalinity
        13) Free "OH" Alkalinity
        14) Chemical Oxygen Demand
        15) Total Suspended Solids (TSS)
        16) Ammonia
        17) Calcium Carbonate Hardness
        18) Calcium Carbonate Alkalinity
        19) Microbiological in organisms/mL (monthly analytical laboratory analysis)
            a) Total Aerobic Plate Count
            b) Total Anaerobic Plate Count
            c) Nitrate Reducers
            d) Sulfate Reducers
            e) Iron Bacteria
5. Conduct final on-site system turn over meeting with Owner and Commissioner. Present final validation report demonstrating that performance requirements have been achieved and that each system is currently properly treated.
6. When required by Part 3, train Owner's maintenance personnel in water treatment procedures.

7. Program Administration Manual:
    a. The CSP shall provide the Owner with two (2) Program Administration Manuals including sections covering program control, testing requirements, in plant logs, safety data and system information. Each section shall include the following:
        1) Program Control: Include a complete program outline with chemical descriptions, control ranges, and required action for "out of range" situations. Also include complete ordering instructions with applicable account numbers and phone numbers.
        2) Testing Requirements: This section will include basic testing practices as well as detailed test instructions for each test to be performed.
        3) Sequence of operation detailing the operation of the chemical treatment system.
        4) In-Plant Logs: Include detailed testing log sheets for each system to be tested including room to record one (1) month's data on one (1) sheet and a section to log chemical inventory.
        5) Safety Data: Include the CSP's 24-hour toll free safety hotline number as well as MSDS sheets for each chemical used.
        6) System Information: Include any equipment manuals and related information.

2.2 TREATMENT PROGRAM – FLUSHING AND CLEANING

A. Cleaning chemicals shall be non-phosphate and non-acidic.

B. Flush and clean all new and reused piping.

C. Provide a flush/clean plan for approval. Provide and later remove all temporary bypasses, drains, vents, etc. required to flush and clean the system. Temporary components for flushing and cleaning are not indicated on the drawings.

D. Flush and clean systems per the general procedures specified in Related Sections; clean systems per the approved cleaning procedures submitted under this specification section. Provide and install all required cleaning chemicals.

E. Verify that adequate cleaning chemical was added and that cleaning was effective. Test that cleaning chemicals were properly rinsed from the system. Provide a report certifying that cleaning and rinsing, was properly executed.

F. Provide chemical treatment immediately after each system has been cleaned and flushed. Systems shall not stand filled with fluids for periods longer than 48 hours without beginning flushing and cleaning of the system, which shall then be immediately followed by the chemical treatment procedures.

2.3 CHEMICAL TREATMENT - GENERAL

A. Provide passivation and chemical treatment per the submitted and reviewed chemical treatment procedures and Program Administration Manual and to maintain the Performance Requirements.

B. Chemically treat new and reused piping networks using chemicals and treatment procedures compatible with the system being cleaned and the chemical treatment chemicals in existing piping systems being connected to. Test existing piping systems or otherwise determine chemical treatment in existing piping and validate compatibility.

THE BELOW PARAGRAPH IN HIDDEN TEXT IS FOR EQUIPMENT WITH SUBSTANTIAL QUANTITIES OF WET GALVANIZED METAL SURFACES; UNHIDE WHEN APPROPRIATE. NORMAL U-M PRACTICE IS TO REQUIRE STAINLESS STEEL HOT AND COLD WATER BASINS ON COOLING TOWERS IN WHICH CASE PASSIVATION IS NOT CONSIDERED NECESSARY FOR THE SMALL AMOUNT OF REMAINING GALVANIZED COMPONENTS.

C. Passivate cooling towers, evaporative coolers, and similar equipment with galvanized-steel components in strict compliance with manufacturers recommendations. Maintain the pH of the circulating water between 7.0 and 8.0 for a minimum of 8 weeks after start-up until zinc surfaces turn a dull gray color; maintain manufacturer's recommended hardness and alkalinity levels during the passivation interval. If white deposits form on galvanized surfaces after pH is returned to normal service levels, repeat the passivation process until galvanized surfaces are properly passivated/no white deposits form.

WHEN CONNECTING INTO EXISTING ACTIVE SYSTEMS, DEVELOP REQUIREMENTS AND A COORDINATION PLAN IN CONSULTATION WITH U-M PLANT AND REVISE THE BELOW SAMPLE PARAGRAPH ACCORDINGLY.

D. When connecting into active existing systems, treat piping networks installed or reused by the project and verify by lab analysis that the treatment levels per the treatment plan have been attained prior to connecting into the existing active system. Submit validating report for approval.

1. Do not connect into existing active system until report is approved by Owner.
2. Provide temporary valves, piping, and accessories as required to treat the project's piping prior to connection to the active system.

E. Provide chemical treatment program at system startup or immediately upon operation of a system for temporary cooling, whichever comes first.

F. Provide chemical treatment immediately after the system has been cleaned and flushed. Immediately thereafter, begin the approved water treatment maintenance program to passivate and prevent corrosion, scale, and organic growth and to maintain treatment chemical levels.

G. Chemical inhibitors for open loop chemical systems shall be polymer based without molybdenum as a corrosion inhibitor and contain azole in an amount appropriate for the percentage of internal copper surface area of the system piping. Provide products with PTSA (p-Toluenesulfonic acid) florescent tracer dyes. Molybdenum shall not be used as a tracer.

H. Use 1" halogenated isocyanurate bromine tablets for biological control.

I. No chemicals shall contain chromates or inorganic phosphates.

J. Adjust chemical concentrations as required to achieve the required performance.

2.4 PERFORMANCE REQUIREMENTS

A. The water treatment programs proposed by the CSP shall maintain corrosion rates below 0.5 mils per year for mild steel and 0.1 mils per year for copper. These rates shall be verified with corrosion coupons provided by the CSP. Coupons shall be analyzed in the CSP's analytical laboratory monthly, or more often if required, to assure these levels are not exceeded.

B. Microbiological growth levels shall be maintained below 10,000 cfu's aerobic bacteria and 10 cfu's anaerobic bacteria. The CSP shall perform detailed microbiological culturing at the CSP's company's analytical laboratory monthly, or more often if required, to assure these levels are not exceeded

C. The Langelier Stability Index shall be maintained to not exceed 2.50.

2.5 EQUIPMENT - GENERAL

A. Provide all components required for a fully operational water treatment system. Provide components that are not adversely affected by the treatment chemicals employed, and that are rated for the maximum pressures and temperatures that may be encountered by the treatment system.

DESIGNER MUST INCLUDE U-M DETAIL 15710002 - CONDENSER WATER TREATMENT EQUIPMENT DIAGRAM ON THE DESIGN DRAWINGS.

B. Refer to the condenser water treatment equipment detail for additional equipment requirements.

2.6 MOTOR OPERATED BALL VALVE:

A. Acceptable Manufacturers:

1. Belimo (Basis of Design)
2. Siemens
3. Johnson Controls

B. 120 VAC, on/off control, normally closed/fail closed/spring return, full port ball valve, 1 inch size with NPT female ends.

C. Forged Brass, nickel plated body, stainless steel ball and stem, PTFE seals and lubricated O-ring packing. Rated for minimum 200 PSI at 212°F.

D. 200 PSI close-off pressure rating, capable of operation at differential pressures up to 30 PSI.

E. Actuator with visual position indicator, manual hex crank valve over-ride, and conduit fitting for electrical connection.

F. Valve and actuator shall also comply with the requirements for ball style control valves in Related Section "Mechanical Systems Controls".

2.7 CHEMICAL FEED PUMP

A. Acceptable Manufacturers:

1. Pulsatron Series E Plus model LPB4 (Basis of Design)
2. Grundfos
3. LMI-Flomotion

B. Nominal capacity of 1.00 GPH (24 GPD) at 100 PSIG.

C. 120 VAC/60 HZ/1 PH with minimum 6 foot long three prong grounded plug. UL or ETL approved for indoor and outdoor use.

D. Reproducibility +/- 2% at maximum capacity.

E. It shall be possible to manually adjust the stroke rate and stroke length via an adjustment means located on the pump body. Provide the following minimum adjustment ranges:

1. Stroke rate turn down ratio 10:1
2. Stroke length turn down ratio 10:1

F. It shall also be possible to start and stop the pump via an external mechanical or solid state relay contact.

G. Provide hand-off-auto switch, circuit protection, and solenoid thermal overload protection with automatic reset.

H. Pump shall be constructed of glass filled polypropylene (GFPPL), with Teflon diaphragm. Fittings, bleed valve, injection valve, and foot valve shall be GFPPL. Fittings shall accommodate 1/4” to 3/8” I.D. tubing. Provide guided check valves with ceramic balls and Teflon seats and o-rings. With bleed valve for priming.

2.8 BROMINE FEEDER TANK

A. Acceptable Manufacturers:

1. Neptune Chemical Pump Company model BT (Basis of Design)

B. Vinylester resin body tank, minimum capacity of 20 gallons. 4 inch top opening with threaded, gasketed closure. Two threaded side connections and one threaded bottom connection, all 1 inch NPT. Maximum tank diameter 18 inches.

C. Tank rated 150 PSI at 150˚F.

D. Provide with accessory piping kit to include inlet diffuser/strainer fitting and exit strainer fitting.

1. All accessories to be rated 150 PSI at 73˚F
2. All components, including manufacturer, shall comply with the requirements of the related articles in this specification section.
3. Unions shall have buttress threads.

E. All materials shall be compatible with a 20% bromine solution at a pH of 5.0-7.5. All seals shall be Viton, PTFE, or FKM.

2.9 CHEMICAL TREATMENT CONTROLLER WITH CONDUCTIVITY PROBE

A. Acceptable Manufacturers:

1. Pulsafeeder “Microvision” model MVS1PB (Basis of Design)

B. Multi-function chemical treatment controller for controlling inhibitor feed, biocide feed, and bleed (blow-down). Complete with toroidal conductivity sensor assembly and back-board for mounting of indicated chemical treatment devices. UL, CSA or ETL listed.

C. Controller features shall include:

1. Polypropylene enclosure rated NEMA 4X
2. Pre-wired 15 ft. power cord and pigtails for 115 VAC.
3. Large LCD display with statistics screen
4. 0–9,999 µS/cm setpoint range
5. Battery backup
6. Password protection
7. Selectable timer
8. Flow switch to make controller inoperative when no flow is detected. Rated minimum 125 PSIG at 122˚F.
9. Water meter inputs: dry contact and Hall Effect types
10. Three drum level detection inputs (opened/closed relay type detection)
11. Dual biocide output relays
12. Inhibitor output relay
13. Bleed output relay
14. Dry contact alarm relay output
15. All relay outputs rated for 2 amps
16. Conductivity output: 4-20 mA isolated analog output
17. PVC back-board for mounting the controller with PVC chemical feed pump shelf attached to the back-board.

D. Toroidal sensor assembly features shall include:

1. No exposed electrodes
2. Temperature compensated
3. With in/out ball valves, strainer, injection tee, and rail.
4. Rated minimum 125 PSI at 122˚F

2.10 CORROSION COUPON RACK*:*

A. Acceptable Manufacturers:

1. Advantage Controls Model ACR (Basis of Design)
2. Cannon Water Technology
3. J.L. Wingert
4. Vector Industries

B. 3/4” diameter Schedule 80 PVC coupon rack with two coupon holders, flow indiactor, and a 1/4” sample tee with valve. Provide mild steel and copper coupons.

1. All components, including manufacturer, shall comply with the requirements of the related articles in this specification section.

2.11 SOLID CORROSION INHIBITOR DISSOLVER

A. Acceptable Manufacturers:

1. Solv-Ultima Model 150 (Basis of Design)
2. Hydro Systems Company Model 590

B. Rated for 1.2 GPM minimum, and 100 PSIG at 100˚F.

C. Constructed of chemical resistant parts molded of polypropylene and polyethylene.

D. Back-up reservoir and float for overflow protection.

E. Pressure regulator adjustable between 20-40 PSIG.

F. Pressure gauge and removable filter.

G. Atmospheric siphon breaker for backflow prevention.

2.12 STRAINERS- CLEAR PLASTIC

A. Acceptable Manufacturers:

1. Spears Manufacturing
2. Hayward
3. Nibco

B. Clear PVC y-strainer rated 150 PSI at 73˚F, with removable basket. With 8 mesh (0.094 inch opening) stainless steel screen.

2.13 FLOW INDICATORS

A. Acceptable Manufacturers:

1. Blue White model F-440 (Basis of Design)
2. King Instrument
3. GF Signet

B. Variable area flow meter, 0-10 gpm (conductivity loop) 5-21 gpm (brominator loop) nominal range, rated 150 psig at 68˚F, with graduated polysulfone or acrylic cylinder, with an accuracy of +/- 5%. Rod guided float with stainless steel rod. Provide 3/4 inch pipe size union end connections.

2.14 PVC BALL VALVES

A. Acceptable Manufacturers:

1. Spears Manufacturing
2. Hayward
3. Nibco

B. True union PVC ball valve rated 200 PSI at 73˚F. Full port, PTFE ball seat, peroxide cured EPDM seals, polypropylene handle, buttress threaded union nuts.

C. Ball valves downstream of the brominator shall be provided with Viton or FKM seals.

DUE TO THE CORROSIVE NATURE OF BROMINE, THE QUILL ASSEMBLY COMPONENTS SPECIFIED BELOW SHOULD NOT BE INDISCRIMINATELY MODIFIED. FOR THE SAME REASON, REVIEW QUILL SUBMITTAL CAREFULLY FOR COMPLIANCE TO THE BELOW. ASSURE ALL COMPONENTS UTILIZE VITON, PTFE, OR FKM SEALS, INCLUDING UNIONS AND BALL VALVES AT AND DOWNSTREAM OF BROMINATOR. CHECK VALVE PREVENTS BACK FLOW DURING CIRCUMSTANCES SUCH AS A HOSE LEAK.

2.15 RETRACTABLE INJECTION QUILL ASSEMBLY

A. Acceptable Manufacturers:

1. Saf-T-Flo Water Services Inc. EB-159 (Basis of Design)
2. Hydro Instruments

B. Injection quill assembly allowing retraction under pressure consisting of 1-1/2 inch brass stop (ball valve) and compression gland, 1 inch diameter sch. 80 PVC solution tube with 45 degree bevel end, check valve, and 1 inch braided PVC hose assembly. All seals shall be Viton or FKM accept as noted.

1. All components shall be rated for 150 PSIG working pressure at 100˚F. All bromine wetted materials shall be compatible with a 20% bromine solution at a pH of 5.0-7.5.
2. With 1 inch male inlet connection, 1-1/2 inch male main connection, brass solution tube adapter and packing nut, stainless steel restraint hook, and stainless steel restraint chain. Restraint chain length shall be selected by the manufacturer to allow closure of the stop before withdrawal of the solution tube.
3. Check valve: Diaphragm style with PVC body, FKM diaphragm, and union nut body. Plast-O-Matic Series CKM. May be provided separate from quill assembly. Mount on solution tube inlet, at downstream end of PVC hose.
4. Solution tube length shall project into the pipe for a distance equal to 1/3 the diameter of the pipe.
5. Provide braided PVC hose length adequate to allow solution tube retraction.
6. Provide stainless steel hose clamps and PVC fittings to allow quill, hose, and pipe connections.

2.16 PIPING AND MISCELLANEOUS COMPONENTS

A. Provide per Related Sections. For components at or downstream of the brominator, provide with Viton, PTFE, or FKM seals.

2.17 CHEMICAL SOLUTION TUBING

A. Chemical solution tubing for connection to suction and discharge of chemical feed pump and inhibitor dissolver:

1. Opaque polyethylene tubing rated minimum of 125 PSIG from -50˚F to 140˚F. Provide polypropylene or stainless steel threaded, compression, or other positive locking style fittings of equivalent rating as required for connection to pump, inhibitor vessel, and rigid piping. Push-on “barbed” style fittings shall not be used.

PART 3 - EXECUTION

3.1 EXAMINATION AND PREPARATION

A. Pre-Treatment Conference: Prior to treatment activities, meet with the Project Engineer, Commissioner and contractors to verify treatment procedures, discuss coordination with existing piping networks, and to coordinate treatment activities with construction schedule.

B. Flush and clean systems per Related Sections and Part 2 above.

C. Examine roughing-in for equipment support, piping, and electrical connections to verify actual locations, sizes, and other conditions affecting equipment performance, maintenance, and operations. Proceed with installation only after unsatisfactory conditions have been corrected.

3.2 INSTALLATION

A. Install all required components per manufacturer's recommendations and per Related Sections and chemically passivate, treat, and maintain the system per the requirements of Part 2.

B. Use and dispose of chemicals and wastewater (including from existing piping networks) per the Quality Assurance section of this specification. All costs of disposal shall be borne by the contractor.

C. Install equipment at locations shown on the Drawings.

D. Provide all chemicals and all incidental components.

E. Provide union connections at inlet and outlet to the bromine feed tank.

F. Make piping connections between dissimilar-metal piping with dielectric fittings per Related Sections.

G. Provide electrical components in conformance with Related Section.

H. Provide interconnecting control wiring for chemical treatment controls and sensors per Related Section 230900.

I. Rigidly support PVC piping at injection quill assembly to prevent pipe movement when operating the isolation valve upstream of the hose connection. Support the quill hose with a hanger that does not abrade the hose surface. Verify that all components at and downstream of the brominator are equipped with the specified seals. Install quill in a location easily accessible for quill removal. Do not mount quill in bottom of pipe. Provide caution label, per detail.

J. Mount sensors, meters, and all other required components.

K. Passivate and chemically treat each system immediately after it has been cleaned and flushed.

SOME PROJECTS, SUCH AS HOSPITAL PROJECTS, MAY DESIRE THAT WATER TREATMENT SERVICES CONTINUE BEYOND SUBSTANTIAL COMPLETION, E.G. A ONE OR MORE YEAR SERVICE CONTRACT. CONTACT

THE U-M DESIGN MANAGER FOR DIRECTION, AND IF NEEDED, REVISE THE PARAGRAPH BELOW TO INCLUDE THAT REQUIREMENT.

L. The treatment program shall begin at system start-up or immediately upon first operation of the system by the contractor for temporary use, whichever comes first. Continue the program until Substantial Completion of the system.

3.3 FIELD QUALITY CONTROL

A. The CSP shall:

1. Verify that systems and equipment have been properly cleaned, flushed, and filled with water, and are fully operational before introducing operational chemicals for water-treatment systems.
2. Introduce and maintain chemical treatment to achieve the specified performance requirements.
3. Set-up and program all water treatment control devices. Program water treatment controller to be inoperative when no flow is detected.
4. Submit a written startup test report for each system placed into service.
5. Provide validation testing and required reports.
6. Attend final on-site system turn over meeting with Owner and Commissioner. Present final validation report demonstrating that performance requirements have been achieved and that each system is currently properly treated.

INCLUDE THE BELOW ARTICLE IN EVERY SPECIFICATION SECTION.

3.4 COMMISSIONING

A. Perform commissioning activities in accordance with Related Sections.

CONSULT WITH THE U-M DESIGN MANAGER TO DETERMINE IF TRAINING IS DESIRED FOR YOUR PARTICULAR PROJECT; KEEP OR DELETE OR MODIFY THE ARTICLE BELOW ACCORDINGLY.

3.5 OWNER TRAINING

A. CSP shall train Owner's maintenance personnel on equipment operation, adding and maintaining proper chemical levels, trouble-shooting, servicing and preventative maintenance procedures. Do not conduct training until after start up and commissioning is completed. Provide training using documents including the Program Administration Manual and the approved Operations and Maintenance manuals. Provide these documents to the Owner at least two weeks prior to the training to allow sufficient time for review.

B. Provide 4 hours training minimum.

1. Schedule training at least 14 days in advance, at date and time approved by Owner.

END OF SECTION 232516

UNIVERSITY OF MICHIGAN
ARCHITECTURE, ENGINEERING AND CONSTRUCTION

ARCHITECTURE & ENGINEERING
326 East Hoover, Mail Stop B
Ann Arbor, MI 48109-1002
Phone: 734-764-3414
Fax: 734-936-3334

BuildingName
The Description of the Project
P00000000 0000

SPECIFICATION DIVISION 23

NUMBER SECTION DESCRIPTION

DIVISION 23 HEATING, VENTILATING AND AIR CONDITIONING (HVAC)
SECTION 232519- STEAM BOILER CHEMICAL WATER TREATMENT

END OF CONTENTS TABLE

DIVISION 23 HEATING, VENTILATING AND AIR CONDITIONING (HVAC)
SECTION 232519- STEAM BOILER CHEMICAL WATER TREATMENT

REVISIONS:
12-7-09: APPROVED AS NEW MASTER.

SPEC EDITOR: DEVELOPED BY HYDRONICS AND STEAM MECH TECH TEAM. EDIT CAREFULLY ON A PROJECT SPECIFIC BASIS.

PART 1 - GENERAL

1.1 RELATED DOCUMENTS

INCLUDE PARAGRAPH 1.1.A AND B IN EVERY SPECIFICATION SECTION. EDIT RELATED SECTIONS 1.1.B TO MAKE IT PROJECT SPECIFIC.

A. Drawings and general provisions of the Contract, Standard General and Supplementary General Conditions, Division 1 Specification Sections, and other applicable Specification Sections including the Related Sections listed below, apply to this Section.

1.2 SUMMARY

A. Section Includes

1. This Section of the Specification includes the provision of all the materials, equipment and chemicals to provide complete chemical treatment systems for the steam boilers.

1.3 REFERENCES

A. American Society for Testing and Materials (ASTM)

1. D859 – Test Method for Silica in Water.
2. D1066 – Practice for Sampling Steam.
3. D1067 – Test Methods for Acidity or Alkalinity in Water.
4. D1068 – Test Methods for Iron in Water.
5. D1126 – Test Method for Hardness in Water.
6. D3370 – Practices for Sampling Water from Closed Conduits.

B. Underwriters Laboratories Inc. (UL)

1. 486A - Wire Connectors and Soldering Lugs for Use With Copper Conductors.

1.4 SYSTEM DESCRIPTION

A. Provide complete chemical water treatment system.

B. Provide chemicals required for the water treatment systems in sufficient quantities for initial operation of the systems.

C. Provide controls, control wiring, motors and starters. Refer to Div. 26 for electrical requirements for motors and starters and electrical items.

D. submittals

E. Product Data: Include rated capacities; water-pressure drops; shipping, installed, and operating weights; and furnished products listed below:

1. Pumps.
2. Chemical solution tanks.
3. Agitators.
4. Control equipment and devices.
5. Test equipment.
6. Chemical feeders.

F. Shop Drawings: Detail equipment assemblies indicating dimensions, weights, loads, required clearances, method of field assembly, components, and location and size of each field connection.

1. Wiring Diagrams: Detail power and control wiring and differentiate between manufacturer-installed and field-installed wiring.

G. Water Analysis: Submit a copy of the water analysis to illustrate water quality available at Project site.

H. Field Test Reports: Indicate and interpret test results for compliance with performance requirements.

I. Maintenance Data: For pumps, agitators, filters, system controls, and accessories to include in maintenance manuals specified in Division 01.

1.5 QUALITY ASSURANCE

A. Field Samples

1. Procure and perform an analysis of a sample of the local water supply and base the water treatment proposal on the results therefrom.

1.6 WARRANTY

A. Provide a complete warranty for parts and labor for a minimum of one year from the date of Substantial Completion. This warranty does not include ongoing chemical treatment or monitoring..

PART 2 - PRODUCTS

2.1 STEAM BOILER CHEMICAL TREATMENT SYSTEM

A. General

1. Provide a complete chemical treatment system as detailed in the drawings with operational sequence as indicated in the drawings.

B. Treatment Chemicals

1. The chemicals for periodic regular boiler water treatment will be by owners' chemical treatment contractor, WATCON; contact Dave Russell, 419-283-4495. This contractor shall provide initial chemicals, required for flushing and boil out of the boiler and boiler feed water unit. The chemicals shall be provided by WATCON and paid for by this contractor.

C. Chemical Treatment Equipment

1. Provide one control panel as detailed in the drawings.
2. Enclosure: NEMA 1, general purpose, with all controls, switches, and lights mounted on the front.
3. Provide chemical metering pumps as detailed in the drawings.
4. Provide an external pressure relief valves constructed of type 316 stainless steel to protect the chemical pumps and discharge piping.
5. Chemical tank assembly, where indicated in the detail, shall consist of a polyethylene tank, welded steel support frame with agitator support, removable cover, suction strainer, drain fitting, and inter-connecting suction piping to chemical pumps with a tank capacity of ___ gallons.
6. For convenience of servicing and adjusting the chemical pumps, mount the pumps on a side mount platform.
7. Provide one agitator, where indicated in the details, with mounting hardware for chemical tank assembly of the direct drive type suitable for the mixing of low viscosity chemical treatment solutions. Provide agitator motor not less than 1/4 hp, 115/1/60, 1500/1750 rpm. Construct shaft and impeller of type 304 stainless steel.
8. Provide one dip tube assembly for each boiler constructed so that it may be inserted through any standard threaded 1/2-inch or larger fitting on the boiler drum, above or below the water line. Provide the insertion length to be adjustable at the time of installation so that the dip tube extends 4 to 6 inches below the normal water level in the boiler. Provide the tubing material of type 304 stainless steel and the fittings of type 316 stainless steel. Rate the tubing and fittings at not less than 150 percent working pressure of the boiler.

PART 3 - EXECUTION

3.1 PREPARATION

A. Chemical Treatment Program - Steam Boilers

1. Cleaning
   a. Immediately after the hydrostatic testing of the system has been completed, drain each boiler, flush with clean water, and refill with clean water to which the appropriate cleaning compound has been added to remove pipe joint compound, fabrication lubricants, oils, welding slag, loose mill scale, and other extraneous materials. Then boil out the boilers in accordance with the boiler manufacturer's instructions. Cool the boilers slowly and flush with clean water.
2. Chemical treatment

a. Once each boiler is clean, immediately fill it with clean water to which appropriate scale and corrosion inhibitors have been added. Then slowly bring the boilers up to boiling temperature and steam slowly with vents open for 60 minutes to deaerate the boiler water. Then close the boilers and put into service. Upon operation, dump the returning condensate to waste for the first 24 to 48 hours, or until it is free of contaminants and debris.

b. Sample boiler water at one-week intervals after boiler startup for a period of five weeks, and prepare certified test report for each required water performance characteristic. Where applicable, comply with ASTM D 3370 and the following standards:
   1) Silica: ASTM D 859.
   2) Steam System: ASTM D 1066.
   3) Acidity and Alkalinity: ASTM D 1067.
   4) Iron: ASTM D 1068.
   5) Water Hardness: ASTM D 1126.

3.2 CHEMICAL CONTAINMENT

A. Install the chemical drums on 2-drum polyethylene, 235-liter (62-gallon) capacity, 419 mm (16-1/2-inch) high pallets with top grating deck; McMaster-Carr Model 12635T13 or as approved.

3.3 WATER ANALYSIS

A. Perform an analysis of supply water periodically to determine the type and quantities of chemical treatment needed to maintain the water quality.

3.4 INSTALLATION

A. Install treatment equipment level and plumb.

B. Add cleaning chemicals as recommended by manufacturer.

3.5 CONNECTIONS

A. Piping installation requirements are specified in other Division 22 Sections. Drawings indicate general arrangement of piping, fittings, and specialties.

B. Install piping adjacent to equipment to allow service and maintenance.

C. Confirm applicable electrical requirements in Division 26 Sections for connecting electrical equipment.

D. Ground equipment.

1. Tighten electrical connectors and terminals according to manufacturer's published torque-tightening values. If manufacturer's torque values are not indicated, use those specified in UL 486A.

3.6 FIELD QUALITY CONTROL

A. Coordinate with outlying boiler group technicians and WATCON representative and perform startup service under their supervision.

1. Inspect field-assembled components and equipment installation, including piping and electrical connections. Report results in writing.
2. Inspect piping and equipment to determine that systems and equipment have been cleaned, flushed, and filled with water, and are fully operational before introducing chemicals for water-treatment system.

B. Test chemical feed piping as follows:

1. Do not enclose, cover, or put piping into operation until it is tested and satisfactory test results are achieved.
2. Test for leaks and defects. If testing is performed in segments, submit separate report for each test, complete with diagram of portion of piping tested.
3. Leave uncovered and unconcealed new, altered, extended, and replaced water piping until it has been tested and approved. Expose work that has been covered or concealed before it has been tested and approved.
4. Cap and subject piping to static water pressure of 50 psig (345 kPa) above operating pressure, without exceeding pressure rating of piping system materials. Isolate test source and allow test pressure to stand for four hours. Leaks and loss in test pressure constitute defects.
5. Repair leaks and defects with new materials and retest piping until satisfactory results are obtained.
6. Prepare test reports, including required corrective action.

3.7 ADJUSTING

A. Occupancy Adjustments: Within 12 months of Substantial Completion, perform two separate water analyses to prove that automatic chemical feed systems are maintaining water quality within performance requirements specified in this Section. Perform analyses at least 60 days apart. Submit written reports of water analysis.

END OF SECTION 232519

UNIVERSITY OF MICHIGAN
ARCHITECTURE, ENGINEERING AND CONSTRUCTION

ARCHITECTURE & ENGINEERING
326 East Hoover, Mail Stop B
Ann Arbor, MI 48109-1002
Phone: 734-764-3414
Fax: 734-936-3334

Building Name
Edit Custom Properties
P00000000 0000

SPECIFICATION DIVISION 23

NUMBER SECTION DESCRIPTION

DIVISION 23
SECTION 233100 - HVAC DUCTS AND CASINGS

END OF CONTENTS TABLE

DIVISION 23
SECTION 233100 - HVAC DUCTS AND CASINGS

REVISIONS:
2-17-2000: SUBSTANTIALLY REVISED, ADOPTED AS NEW MASTER.

7-29-10 SUBSTANTIAL REVISIONS FOR HVAC MECH. /TECH. TEAM – S. WOLDT

4-2011 FORMAT AND CONTENT REVISED BY MECH/TECH TEAM

2-2012 HANGING DUCT WITH CABLE OR WIRE PROHIBITED, PER HVAC MTT DECISION.

OCT. 2015: ADDED SET DUCT AS APPROVED MFR. D. KARLE PER HVAC MTT.

PART 1 - GENERAL

1.1 RELATED DOCUMENTS

INCLUDE PARAGRAPH 1.1.A AND B IN EVERY SPECIFICATION SECTION. EDIT RELATED SECTIONS 1.1.B TO MAKE IT PROJECT SPECIFIC.

A. Drawings and general provisions of the Contract, Standard General and Supplementary General Conditions, Division 1 Specification Sections, and other applicable Specification Sections including the Related Sections listed below, apply to this Section.

B. Related Sections:

1. Section 220500: Common Work Results for Mechanical
2. Section 220548: Vibration Control
3. Section 220719: Mechanical Systems Insulation
4. Section 233300: Air Duct Accessories and RGDs
5. Division 26: Electrical.

1.2 SUMMARY

A. Section Includes:

1. Ductwork materials, plenums, construction, , fabrication, and support
2. Galvanized steel ductwork.
3. Polyvinyl chloride coated galvanized steel ductwork (PCD).
4. Stainless steel ductwork.
5. Round and flat oval ductwork.
6. Reinforcing and supports.
7. Flexible duct.
8. Flexible nonmetallic duct.
9. Special ductwork construction including exhaust plenums; perchloric acid ductwork system; double-wall ductwork; and exhaust stacks.
10. Custom fabricated canopy hoods.
11. Double-walled panels, plenums, and duct at outside air intake plenums.

12. Blank-off panels for unused louver areas.
13. Dryer vent ductwork.
14. Bellmouth connections.
15. Duct sealants.
16. Duct cleaning and disinfecting
17. Ductwork sealing, inspection, and leakage testing.

1.3 QUALITY ASSURANCE

A. Manufacturers and Products: The products and manufacturers specified in this Section establish the standard of quality for the Work. Subject to compliance with all requirements, provide specified products from the manufacturers named in Part 2.

B. Reference Standards: Products in this section shall be built, tested, and installed in compliance with the following quality assurance standards; latest editions, unless noted otherwise.

C. ASTM A653 / A653M Standard Specification for Steel Sheet, Zinc-Coated (Galvanized) or Zinc-Iron Alloy-Coated (Galvannealed) by the Hot-Dip Process.

D. ASTM A 666 – Standard Specification for Austenitic Stainless Steel Sheet, Strip, Plate, And Flat Bar.

E. ASTM B 209 & 209M – Standard Specification for Aluminum and Aluminum Alloy Sheet and Plate.

F. NFPA 90A – Standard for the Installation of Air Conditioning and Ventilating Systems.

G. NFPA 90B – Standard for the Installation Of Warm Air Heating and Air Conditioning Systems.

H. NFPA 91 – Standard for Exhaust Systems for Conveying of Materials.

I. NFPA 92A – Standard for Smoke Control Systems.

J. NFPA 92B – Standard for Smoke Management Systems.

K. NFPA 96 – Standard for Ventilation Control of Cooking Operations.

L. NFPA 99 – Standard for Health Care Facilities.

M. SMACNA – All standards.

N. AWS - All applicable standards.

O. UL 181, 181A, & B – Factory-made Air Ducts and Connectors and Closure Systems.

P. UL 760 – Standard for Exhaust Hoods For Commercial Cooking Equipment.

Q. UL 723 – Standard for Surface Burning Characteristics of Building Materials.

R. Air Diffusion Council – Flexible Duct Performance and Installation Standards.

S. National Air Duct Cleaners Association (NADCA).

1.4 SUBMITTALS

A. Provide the following information and product data:

1. Project specific duct fabrication schedule including materials, methods of installation, and location of fitting types. Indicate the metal gauge and reinforcement method intended for each pressure classification and size of duct.
2. Construction details for double wall duct and panels, plenums, stacks, canopy hoods, etc.
3. Double wall duct and panel fill material
4. Hangers and supports
5. Duct fittings
6. Turning vanes
7. Duct sealant
8. Flexible duct
9. Dryer duct and fittings

1.5 WARRANTY

A. Provide a complete parts and labor warranty for a minimum of one year from the date of Substantial Completion.

PART 2 - PRODUCTS

2.1 GENERAL

A. Provided duct and fittings of G90 galvanized steel unless otherwise indicated.

B. Constructed duct and fittings in compliance with SMACNA standards and recommendations and per the additional requirements indicated.

C. Duct dimensions indicated on drawings are inside dimensions. The sheet metal dimensions shall be increased an equivalent amount to accommodate internal liner where liner is required.

D. Drawings are diagrammatic and indicate the arrangement of the principal apparatus, ductwork, and piping, and shall be followed as closely as possible. All the required offsets, rises, drops, fittings and accessories are not indicated on the drawings, but shall be provided as required for a complete system. Carefully investigate structure, finish conditions, and the work of other sections affecting sheet metal work, including work associated with testing, adjusting and balancing, in order to arrange all items accordingly. Provide best possible arrangement to provide maximum headroom and maintenance clearances.

E. In addition to sheet metal ductwork specified herein, provide, or install as furnished by other sections, accessories and devices including, but not limited to, smoke detectors, plenums, canopy hoods, control dampers, and blank-off panels at unused louver areas.

F. Provide intake and exhaust plenums attached to louvers.

G. Alternate Joining Methods: As an alternate to SMACNA joining methods, Contractor may propose proprietary joining systems with performance equivalent to SMACNA for Owner's approval.

IMPORTANT: INCLUDE THE DUCT APPLICATION SCHEDULE ON DRAWINGS AND EDIT APPROPRIATELY FOR SPECIFIC PROJECTS. SEE U-M STANDARD

DETAILS FOR SAMPLE SCHEDULE, CONSTRUCTED FOR USE WITH THIS SPECIFICATION.

H. Refer to Drawings for ductwork construction and application schedule.

2.2 DUCTWORK MATERIALS AND FABRICATION

A. General Ductwork Fabrication Requirements:

1. Provide fittings, branches, inlets and outlets in such a manner that air turbulence is reduced to a minimum.
2. Turns:
   a. Use radius type elbows wherever possible. Where it is not possible to install a 1.5 times width to centerline radius elbow (full radius elbow), use lesser radii configurations, with 'radius-proportional' splitter vanes permanently installed within. No radius shall be less than 1.0 times width. Provide square elbows of equivalent pressure drop in rectangular ducts where radius elbows will not fit or where specifically noted on drawings. Elbows shall be installed with vanes in accordance with Related Section "Sheet Metal Accessories." Stamped elbows may be used up to and including a diameter of 12 in.
3. Transitions:
   a. Limit transition angles (for each side) to 15 degrees diverging and 30 degrees converging.
4. Take-Off Fittings:
   a. For take-offs carrying more than 25 percent of duct main, provide an increasing branch elbow with an inside radius equal to branch duct width. Size branch and main at elbow for equal velocity.
   b. For take-offs carrying 25 percent or less of duct main, provide flanged increased area branch take-off (45 degree entry, "shoe" type) or 45 degree lateral wye takeoffs. Conical fittings shall be used for spiral, round, and oval ductwork.
   c. For take-offs directly to side outlet for register or grille, provide an increased area tap. For take-offs directly to diffusers see appropriate SMACNA figures.
   d. Acceptable take-off fitting manufacturers:
      1) Sheet Metal Connectors, Inc.
      2) United Sheet Metal.
      3) McGill AirFlow LLC.
      4) Set Duct.
      5) Tangent.
      6) Flexmaster.
      7) SEMCO Incorporated.
      8) Sheet Metal Connectors, Inc.
5. Crossbreak or bead rectangular ductwork.
6. Rectangular duct longitudinal seams shall be Pittsburgh lock 3/8 in. minimum pocket.
7. Bolts and Fasteners
   a. Carbon steel, zinc coated per ASTM A153 for G-90 and stainless steel for aluminum and stainless steel ducts.
8. Welding Materials
   a. Refer to SMACNA "Guidelines for Welding Sheet Metal" for applicable requirements.

B. Galvanized Steel Ductwork:

1. Minimum steel rectangular duct gage shall be as follows:
   a. Ducts through 12 in. wide: 24 Gage
   b. Ducts 13 in. through 30 in. wide: 22 Gage.
   c. Ducts 31 in. through 84 in. wide: 20 Gage.
   d. Ducts 84 in. and larger: 18 Gage
2. ASTM A653, A924 mill galvanized steel sheet, 1.25 oz per sq. ft. zinc coating on each side in conformance with coating designation G-90.

C. Galvanized Touch-Up Paint: Inorganic zinc-rich touch up paint containing a minimum of 65 percent metallic zinc by weight for damaged galvanized coating.

1. Acceptable manufacturers/product: Carboline/Carbo-Zinc, Tnemec/Tneme-Zinc.

D. Polyvinyl Chloride Coated Galvanized Steel Ductwork (PCD):

1. Except where noted, comply with Galvanized Steel Ductwork paragraph above. Factory coat interior and exterior with a 4 mil thick coat of fused polyvinyl chloride. Construct and install horizontal ductwork and fittings with longitudinal seam located on top of duct.
2. Screws and rivets that penetrate ducts shall be stainless steel.
3. Cut edges or coating damage shall be touched up to match the 4 mil thick coat of fused polyvinyl chloride.
4. Acceptable Manufacturers: Set Duct, Tangent, United McGill

E. Stainless Steel Ductwork

CONSIDER IF THE LESS EXPENSIVE 304 STAINLESS STEEL IS SUITABLE FOR YOUR APPLICATION.

1. Minimum stainless steel rectangular duct gauge shall be 18 gauge, for welding.
2. ASTM A167, type 316L.
3. Concealed stainless steel ductwork shall have an ASTM mill rolled No.1 or No.2 D finish.
4. Exposed stainless steel ductwork shall have an ASTM mill rolled No.2 B finish, or as indicated. Welds shall be ground smooth and final brushed with stainless steel wire brushes. Welds on exposed stainless steel ductwork shall be free of stain, burn-through, or discoloration to the satisfaction of the University's Representative/Project Design Engineer.
5. Screws and rivets shall be stainless steel.

F. Round and Flat Oval Ductwork

1. All round and oval duct shall be manufactured of spiral lock seams, with minimum gage per the appropriate SMACNA Tables and per manufacturers recommendations. Ductwork up to 12 in. diameter and 2 in. w.g. can be manufactured with longitudinal lock seams.
2. Tees shall be conical. Laterals shall be straight. Taps through 10 in. diameter in size shall have a machine drawn entrance and fittings shall have longitudinal seams, continuously welded. Both sides of welds shall be primed with zinc chromate. Tap entrances shall be free of weld build-up.

3. Elbows in diameters 2 in. through 10 in. shall be stamped or pleated. Elbows shall be 5 gore for 90 degrees and 3 gore for 45 degrees. Elbows shall have 1.5 times width to centerline radius (full radius elbow).
4. Flanges, access doors and taps into spiral ducts shall be factory fabricated.
5. Field joints in diameters through 48 in. shall be made with 2 in. long slip-fit, sleeve coupling, or flanges. Ductwork 48 in. diameter and over, and for all sizes where disassembly or removal is required, shall be joined with flanges.

G. Reinforcing and Supports

1. Structural steel per ASTM A36; Mill galvanized per ASTM A653, Coating Designation G-90. Equivalent rolled steel structural support systems (such as TDF or TDC) may be used in lieu of mill rolled structural steel. Use double nuts and lock washers on threaded rod supports.
2. Tie-Rods
   a. Maximum tie rod spacing shall be 42 in., unless specifically engineered in accordance with SMACNA Industrial Rectangular Duct Standard.
   b. Minimum tie rod diameter shall be 1/2 in.
   c. Tie Rods shall not be used in any plenum or ducts that require access.
   d. Tie rods shall not be used in any PCD, cage wash, BSL-3 or BSL-4, Vivarium, stainless steel, or ducts carrying lint.
   e. Tie rods shall not be used in any return or exhaust ducts in health care facilities.

2.3 FLEXIBLE DUCT

A. General

1. Flexible duct shall be UL listed, and shall maintain shape when installed. Sagging shall not exceed 1/2 in. per linear foot when installed horizontally.
2. Flexible duct shall not be used where system pressure is greater than plus or minus 2 in. w.g.
3. Insulated flex shall have a gray fire retardant polyethylene outer jacket with an 8 oz. density, 1-1/3 in. thick fiberglass insulation blanket, factory wrapped.
4. Flexible duct used on negative pressure systems shall be specifically rated for negative pressure use.

FLEXIBLE METALLIC DUCT IS SELDOM USED, AND NOT COVERED BELOW.

B. Flexible Nonmetallic Duct

1. Flexible nonmetallic duct shall be constructed of sound transparent foil. Material shall be mechanically locked to the outside helix. Use of adhesives to lock fabric in place is not acceptable. The helix shall be constructed of corrosion resistant galvanized steel, formed and mechanically locked to the duct fabric on the outside to prevent tearing.
2. Flexible fabric duct shall be rated at 6 in. positive pressure and at 4 in. negative pressure.
3. Flexible nonmetallic duct shall be listed UL Class 1.
4. Acceptable manufacturers:

a. Flexmaster.
b. Hart & Cooley.
c. Atco.

2.4 SPECIAL DUCTWORK CONSTRUCTION

A. Ductwork required to be removable shall utilize companion flanges.

B. Ductwork systems serving areas of high process humidity shall be constructed of aluminum, min. thickness of 0.040 in., or 316L stainless steel. Ductwork shall be continuously welded and watertight. Pitch duct to low point drains. Pipe drains to floor drains or utility sinks.

1. Provide in the following areas, and where indicated:
   a. Non-insulated ductwork exposed on roof.
   b. Dishwasher exhaust.
   c. Within 20 feet of a shower area exhaust register/grille.
   d. From sterilizer and glass washer exhaust register/grille, canopy, or equipment connection to main or lateral duct (stainless steel only).

C. Exhaust plenums on roof shall be double wall with 2 in. thick duct liner, G-90 stainless steel solid inner wall (gauge per specified duct minimum standards) and minimum 18 gauge, G-90 stainless steel outer wall.

SEE THE U-M DESIGN GUIDELINE FOR PERCHLORIC ACID SYSTEMS. EDIT PARAGRAPH BELOW ACCORDINGLY.

D. Perchloric Acid Ductwork System.

E. Double Wall Ductwork.

AVOID THE USE OF PERFORATED DOUBLE WALL DUCT DUE TO CONCERNS WITH ABILITY TO CLEAN PROPERLY, INSULATION EROSION, MOLD/FUNGUS GROWTH, AND COST. INDICATE ON DRAWINGS OR IN SPECIFICATION WHERE SOLID DOUBLE WALL AND PERFORATED DOUBLE WALL IS TO BE USED.

1. Solid outer and inner wall, or solid outer wall and perforated inner wall, as indicated.
   a. Outer wall: comply with Galvanized Steel Ductwork paragraph above.
   b. Insulation: 1-in. thick, 3.0 lb. density fiberglass acoustical liner with fire resistant fiber bonding coating and a 1 mil vapor barrier on inside of Tedlar or Mylar.
   c. Inner wall solid: Minimum 18 gauge.
   d. Inner wall perforated: Minimum 18 gauge perforated steel, nominal 3/32 in. diameter perforations, overall open area of 23 percent. Tightly secure liner along all seams.
2. Double wall ductwork from a point 10 feet upstream of steam humidifiers to a point 20 feet downstream of humidifiers shall have a solid inner wall.
3. Acceptable manufacturers: McGill AirFlow LLC; Semco, or as approved.

DETAIL THE STACK HEIGHT AND CONSTRUCTION ON DRAWINGS.

F. Exhaust Stacks:

1. Construct stacks from same material as exhaust duct or as indicated on drawings.
2. Stacks shall be self-supporting and constructed for wind velocities at a minimum of 100 MPH from all directions.

2.5 CUSTOM FABRICATED CANOPY HOODS

DETAIL CANOPY CONSTRUCTION ON DRAWINGS.

A. Fabricate from 18 gauge 316L stainless steel, all welded construction, number 2B finish, or from material as indicated on Drawings.

B. Welds shall be ground smooth and final brushed with stainless steel wire brushes. Welds shall be free of stain, burn-through, or discoloration.

C. Provide a continuous turned-up lip forming a trough around the inside perimeter of the hood with separate drain connections consisting of a welded stainless steel nipples, and as indicated on the drawings.

D. Size and configuration of each hood shall be as indicated on the drawings. Coordinate with other trades for lights, fire protection, controls, and other interconnections.

2 1/2 IN. THICK PANELS ARE DESCRIBED BELOW, EDIT TO MAKE PROJECT SPECIFIC.

2.6 DOUBLE-WALLED PANELS, PLENUMS, AND DUCT AT INTAKES AND RELIEFS

A. Double-walled type panels, 2-1/2-in.-thick, constructed from smooth or embossed mill finish G-90 galvanized steel or aluminum facing sheets. Each panel shall contain an integral frame of G-90 galvanized steel or extruded aluminum bonded to the facing sheets to provide a moisture-tight seal at the panel perimeter. Panels shall be load bearing and capable of forming the plenum or duct without the installation of structural members. Join panels together with G-90 galvanized steel or extruded aluminum mullions and fasten with closed end rivets. Make connections to the duct or plenum using a support mullion that is an integral part of the panel and not bolted to or through the panel. Gasket all joining mullions with a double vinyl gasket or a double butyl gasket to provide a permanent air-tight seal. Design panel skins, core density, rib spacing, and mullion spacing to eliminate panel pulsation and to a maximum deflection of 1/200 of any span at design pressure, positive or negative. The overall "U" factor of the panels shall not exceed 0.14 BTU/ft^2/°F.

B. Removable panels shall be the same construction as described above, with double seals around periphery to guarantee tight closure.

C. Access doors shall be constructed as follows:

1. Doors shall be minimum 24 in. wide whenever possible, or widths as indicated on drawings. Provide doors that are the full height of the panel, maximum 5 ft. high.
2. Each access door shall be equipped with continuous double gaskets and shall fit in the door frame in a manner to guarantee tight closure.

3. Hinges and hardware shall be galvanized, stainless steel or aluminum. Outdoor unit hardware shall be stainless steel, or aluminum. Provide at least 2 handles per door, operable from either side.
4. Access doors in positive pressure sections shall open inward, in negative pressure sections shall open outward.
5. Where indicated, provide a glass window in the access door, minimum 6 in. by 6 in. size, located at a height convenient for viewing, sealed to prevent leakage, rated to operate safely against the duct/plenum pressure rating. Provide double pane insulating type glass at all locations connected to outdoors/exterior or exposed to air temperatures below 55F; single pane at other locations.

D. The manufacturer shall have published literature available stating the coefficient of absorption and the sound transmission loss characteristics of the panels system per ASTM C 423 and the sound transmission loss properties per ASTM E 90 and E 413. Published acoustic data shall show the trademark or name of the manufacturer, shall have been verified by a recognized independent testing laboratory, and shall specify the coefficient of acoustic absorption and attenuation by octave band. Submit acoustic performance data in graphic and tabular form as part of the shop drawings. Minimum panel performance for 2-1/2 inch thick panels shall be as follows:

Frequency (Hz)	125	250	500	1000	2000	4000
Transmission Loss (dB)	14	22	28	35	43	48
Absorption Coefficient	0.3	0.7	0.95	0.95	0.95	0.85

E. The duct and plenum systems, in addition to supporting indicated equipment, scheduled maximum operating pressure, and system test pressure, shall sustain a 35 lb. per sq. foot maintenance function load without permanent deformation or damage.

F. Acceptable Manufacturers:

1. McGill Airflow LLC.
2. Semco Mfg Co.
3. Vibro-Acoustics

2.7 BLANK-OFF PANELS FOR UNUSED LOUVER AREAS

A. Provide a minimum 20 gauge, G-90 galvanized or aluminum, insulated sheet metal blank-off panels for unused louver sections. Panels may be of the double-walled or single wall insulated type. For double-walled type panels, the insulation shall have an overall "U" factor of 0.14 BTU/ft^2/°F. Insulation for single skin panels shall be of the rigid type and of the thickness as specified for outside air intake ducts located in mechanical rooms in Related Section "Mechanical Systems Insulation," permanently secured to the panel skins. Panels shall have a maximum deflection of 1/200 of any span at wind velocities of up to 100 MPH.

B. Exterior/visible face of blank-off panel shall be cleaned and painted flat black, prior to installation.

THE SPECIFICATION BELOW FOR CLAMP-TOGETHER DRYER VENTING IS INTENDED FOR HEAVY USE CLOTHES DRYER APPLICATIONS SUCH AS RESIDENT HALL LAUNDRY ROOMS WITH MULTIPLE DRYERS WHERE ACCESS TO

DISASSEMBLE DUCT FOR PERIODIC CLEANING MAY BE CHALLENGING. FOR SIMPLE DRYER APPLICATIONS, SPECIFYING CONVENTIONAL DUCT MAY BE MORE APPROPRIATE.

2.8 CLOTHES DRYER VENT DUCTWORK

A. Dryer vent duct system shall consist of a clamp-together rigid duct system utilizing single lever reusable clamps at transverse joints.

B. Ductwork and fittings shall be round G-90 galvanized steel, of gauge and construction as recommended by SMACNA for the system's static pressure, minimum 22 gauge.

C. Duct shall be roll formed and continuously laser welded along longitudinal seams with the exception of the 3-in. duct that may be lock formed. Non laser welded elbows, branches, reducers, etc. to have a buffed smooth interior. End connections shall be die-formed rolled edge for use with single lever clamps.

D. All connections and seams shall have gaskets, seals and sealant compatible with the application, not degraded by chemicals with a PH range of 0-14, temperature rating not less than 500°F. Duct leakage shall not exceed SMACNA Class 3 at 5 in. w.g. static pressure.

E. Clamp gaskets shall be PTFE.

F. Include all elbows, fittings, adapters and accessories for a complete installation.

G. Elbows shall be long radius type with centerline radii of 1.5 x diameter whenever space permits. Elbows with centerline radii of 1.0 x diameter in congested spaces: submit for approval. Branch fittings shall be concentric.

H. Approved manufacturer: Nordfab Quick-Fit/ACS, Fenton, MO.

2.9 BELLMOUTH CONNECTIONS

A. Bellmouth fittings shall be constructed to match material requirements as indicated on drawings.

B. Bellmouth shall have a minimum radius of 1 1/2 in. with 1/2 in. flange and 1/2 in. by 1/8 in. thick neoprene gasket.

C. Manufacturers:

1. Buckley Associates.
2. McGill Airflow LLC. Semco.

2.10 DUCT SEALANTS

DETERMINE IF SOLVENT BASED DUCT SEALANT IS APPROPRIATE FOR THE AREA OF WORK AND EDIT THE BELOW ACCORDINGLY. NOTE THAT LEED© TYPICALLY PERMITS SOLVENT BASED DUCT SEALANTS IN WELL-VENTILATED AREAS DURING LOW AMBIENT TEMPERATURES (<40°F), BUT WATER BASED SEALANTS OTHERWISE.

A. Solvent-based sealants may only be used if the outdoor air temperature will be below 40°F within 24 hours of applying.

B. Sealant shall be non-asbestos type, and comply with UL and NFPA 90A.

C. Sealant: Water or solvent based elastomeric compound, gun or brush grade, maximum 25 flame spread and 50 smoke developed (dry state) specifically for sealing ductwork. Use products as recommended by manufacturer for low, medium or high-pressure systems.

1. Manufacturers
   a. Hardcast.
   b. McGill Airflow LLC.
   c. Polymer Adhesives.
   d. Ductmate.

D. Tape shall not be used.

E. Gaskets and mastics used for flanged joints shall be compatible for the service of use and per the manufacturer's recommendations.

2.11 DUCTWORK CLEANING AND DISINFECTING

DETERMINE IF THIS SECTION IS REQUIRED. INSERT AND EDIT THE NADCA SPECIFICATION APPROPRIATELY.

A. When scheduled, the minimum requirements for commercial HVAC system cleaning shall be as described in the National Air Duct Cleaners Association (NADCA) "General Specifications for the Cleaning of Commercial Heating, Ventilation and Air Conditioning Systems."

B. Approved Cleaning Specialists:

1. Sani-Vac Service
2. Power Vac
3. High Tech Vacuum
4. Aero Filter Inc.

PART 3 - EXECUTION

3.1 GENERAL SHEET METAL INSTALLATION

A. Ductwork shall be installed to true alignment, parallel or perpendicular to adjacent building walls, floors and ceilings, to present a neat and workmanlike appearance.

B. Provide necessary offsets and transitions to avoid interference with the building construction, piping, or equipment. Locate ducts with sufficient space around equipment to allow operating and maintenance activities.

C. Bullhead tees and straight tap connections are not acceptable.

D. Provide straight runs of ductwork, upstream and downstream, at equipment, fans, coils, TAU's, LTAUs, and humidifiers per manufacturer's recommendations and as indicated on drawings.

E. Provide flexible connector where ductwork connects to fans, air handling units and other rotating equipment and where indicated on drawings.

F. Repair damaged galvanized surfaces with zinc rich paint.

G. For ductwork mounted outdoors, install duct with slight lateral pitch to prevent water ponding on top of duct.

H. Repair PCD ductwork where coating is damaged or exposed by connections with compatible liquid PVC or per manufacturer's recommendations.

I. Enclose dampers located behind architectural intake or exhaust louvers in a sheet metal collar and seal to building construction.

J. Air volume control on parallel flow branches shall be accomplished with branch dampers; splitter type dampers are not acceptable.

K. Install special equipment items in ductwork systems including, but not limited to: control dampers, thermometers, airflow measuring devices and other related items, according to manufacturer's recommendations.

L. Set plenum doors 6 in. to 12 in. above floor. Arrange door swings so that fan static pressure holds door in closed position.

M. Store duct at least 4 in. above floor on wood pallets or similar devices. Protect duct from odors, dust, moisture, and other debris while stored on or off the jobsite, and when transporting to the jobsite, by tightly covering with plastic.

N. Ductwork openings shall remain protected and covered until just prior to connection. Immediately after assembly, restore all protection to prevent odors, dust, moisture, and other debris from entering ductwork system. Remove any internal labels.

O. Provide required penetrations and sleeves in building structure.

P. Blank-off panels shall be screwed to louver blades and caulked to provide a weather tight seal.

3.2 FLEXIBLE DUCT INSTALLATION

A. Flexible duct runs shall not exceed 5 ft. long. Cut to length so that it is not compressed. Trim ends squarely. Sag shall not exceed 1/2 in. per linear foot when installed horizontally.

B. Provide a minimum of 3 ft. of flexible non-metallic duct at connections to supply, return and exhaust diffusers/grilles, unless otherwise noted.

C. Support at a maximum spacing of 2 ft. using 4 in. wide sheet metal protection saddles at each duct hanger. Flex duct directional changes shall not exceed 45 deg with centerline radius of bend no less than one-half times duct diameter.

D. For connection to supply, return and exhaust diffusers/grilles located in horizontal ceilings, use pre-fabricated 90 degree plastic supports (such as the Flexflow Elbow by Thermaflex), or 90 degree sheet metal elbow fittings.

E. Apply duct sealant to outside surface of collars and secure with metallic draw-band where flexible duct joins other duct or devices.

F. Flexible duct shall not be used to connect terminal units to branch or main ducts.

3.3 DUCTWORK HANGERS AND SUPPORTS

A. Generally, hang and support ductwork per the latest edition of SMACNA. Additionally, adhere to the more specific requirements found in this specification section, the Related Sections, and as indicated on the project drawings.

B. Hanging duct, equipment, or accessories with cables or wires is prohibited.

C. Comply with Related Sections and drawing details regarding hangers, building attachments, fasteners, beam clamps and retaining clips, and as note below.

D. Provide vibration isolation as specified in Related Section.

E. Ductwork shall be supported and anchored to structure so that horizontal ducts are without sag or sway, vertical ducts without buckle and all ducts are free from deformation, collapse or vibration

F. Support un-insulated rectangular ducts in sizes to 36 in. by non-perforated galvanized steel strap or by trapeze hangers. Support insulated rectangular ducts and ducts larger than 36 in. with trapeze hangers.

G. Provide at least one support for each length of duct, with a maximum hanger spacing of 10 feet. Install supports on both ends of duct turns, branch fittings and transitions.

H. Do not hang ductwork from piping, ducts, other trades hangers, existing hangers, or equipment.

I. Single band hangers are not acceptable on ducts greater than 24 in. diameter.

J. Provide supports on each side of any duct mounted equipment or device, including fans, coils, dampers, etc, to permit removal of item without removal of adjacent duct sections.

K. Provide supplemental steel required to support ductwork in shafts, mechanical rooms or on the floor where structural steel is not properly positioned.

L. Beam clamps shall be double sided on ducts over 36 in. by 36 in. Use double sided or single sided beam clamps with retaining clips on all other sizes.

M. Do not modify existing structural steel without approval of U-M project manager and a structural engineer’s review.

N. Provide clamping systems that are compatible with the structural steel system of the building.

O. Use angle iron "V" construction supports or similarly rigid construction for vertical ducting that requires lateral support.

P. Ductwork mounted on roof or otherwise exposed to elements shall be supported with frames constructed of galvanized steel angles and channels, regardless of duct size. Supports shall not rest on top of roof, but shall be firmly attached to roof structure and properly flashed. Ducts that penetrate through the roof shall utilize curbs and shall be counter-flashed. All fasteners shall be galvanized.

Q. Provide angle sway bracing and diagonal cross bracing to the structure to provide support against maximum lateral loads that may be imposed on the ductwork installed downstream of fan discharges and ductwork exposed to wind loads, and any other locations exposed to lateral loads.

3.4 DUCT PAINTING

A. Where the interior of duct is visible through grilles, registers, diffusers or other air diffusion devices, paint the interior flat black. Coordinate work with Architectural Trade.

B. For plenum returns, where equipment and structure above ceiling is visible through return air grilles, provide black sheet metal baffle with turned edges suspended from building construction. Size and position the baffle to prevent restriction of air flow. Where space above ceiling precludes use of a baffle, paint visible building surfaces flat black.

3.5 TEMPORARY USE

A. Develop a plan that assures ductwork is protected during temporary use. Obtain approval of the plan from the Owner's Representative.

B. Maintain the protection plan until just prior to Owner turn-over.

C. Successfully complete return/negative pressure duct leak testing prior to duct temporary use.

D. Temporary filters shall be provided in return or negative pressure duct to protect ductwork and building contents when any fans are operated during construction. Filters shall have an equal or better performance rating than the air handling unit pre-filters specified for permanent use, but not less than MERV 8, in order to prevent construction dirt infiltration into duct systems. Install filters over grilles, diffusers, and all duct openings. Provide filters over supply grilles, diffusers and duct openings if construction dust and debris will enter when operated for temporary service (e.g. air system cycles off during periods when construction continues). Seal around temporary filters to prevent filter bypass.

E. Continuously maintain all filters and replace when pressure drop exceeds 1 in. w.c., or at manufacturer's recommended change-out pressure drop, whichever is lower.

F. Remove temporary filters and associated materials, and clean any adhesive residue from finished surfaces, at completion of temporary use.

3.6 DUCTWORK SEALING, INSPECTING AND LEAKAGE TESTING

A. Seal, inspect and test prior to insulating or concealing ductwork. Leak test per procedures in the latest edition of SMACNA.

FOR EXPOSED DUCT IN FINISHED AREAS, CONSIDER IMPACT OF SEALANT ON AESTHETICS OF DUCT. POSSIBLE OPTIONS ARE NO SEALANT, WELDED JOINTS, OR BANDS TO COVER THE SEALANT.

B. Seal ductwork to meet the following SMACNA seal classifications:

BELOW DUCT SEAL REQUIREMENTS MEET OR EXCEED ASHRAE 90.1 2007 REQUIREMENTS EXCEPT FOR UNCONDITIONED SPACES. ENGINEER TO REFER TO 90.1 FOR THE DEFINITION OF AN UNCONDITIONED SPACE AND IDENTIFY IF THE PROJECT HAS ANY DUCT RUNNING IN UNCONDITIONED SPACES. IF SO, SPECIFICALLY IDENTIFY WHICH SPACES ARE CONSIDERED UNCONDITIONED AND INDICATE THE REQUIRED SEAL CLASS, MATCHING 90.1 REQUIREMENTS.

1. Pressure class 2 in. w.c. or less (except exhaust or outdoor): Class C (seal transverse joints only.)
2. Exhaust ductwork, pressure class 2 in. w.c. or less: Class B (seal all transverse joints and longitudinal seams).
3. All outdoor ductwork: Class A (seal all transverse joint, longitudinal seams, and duct wall penetrations)
4. All ductwork rated for a pressure greater than 2 in. w.c: Class A (seal all transverse joints, longitudinal seams, and duct wall penetrations).
5. All inaccessible ductwork (duct in shafts, above hard ceilings, and any made inaccessible by work of other trades): Class A.

C. Perform measured leak testing on the following ductwork:

1. All duct sealed to SMACNA Class A.
2. All welded duct.
3. Maximum permissible leakage rate:
   a. SMACNA Leakage Class 3.
   b. Welded Ductwork: Zero leakage.

D. Duct Leakage Testing Procedures:

1. Prior to fabrication and installation, develop and submit for approval a ductwork testing plan, indicating locations of temporary caps, surface area of ductwork test sections, test pressure, leakage class and allowable leakage in cubic feet per minute.
2. Notify the Owner’s Representative at least 2 days prior to each test.
3. Provide all blank-off plates, flanges, and safing required to isolate each section of duct to be tested.
4. Provide necessary testing apparatus.
5. For all ducts, pressurize ductwork to the specified pressure class and inspect ductwork for visual and audible leaks, and leaks perceptible to a hand 2 in. from duct. Reseal all perceptible leaks until acceptable to Owner’s Representative.
6. After completing visual and audible inspection, conduct measured ductwork leakage tests at the specified pressure class for the duct. Reseal and retest as required until successfully achieving the specified leakage class.
7. Submit leakage test report for approval, using SMACNA or other approved form.

3.7 COMMISSIONING

A. Perform the commissioning activities as outlined in the Division 01 Section Commissioning and other requirements of the Contract Documents.

3.8 DUCTWORK CLEANING

DETERMINE IF THIS SECTION IS REQUIRED. INSERT AND EDIT THE NADCA SPECIFICATION APPROPRIATELY.

A. Clean HVAC system as specified in the National Air Duct Cleaners Association (NADCA) "General Specifications for the Cleaning of Commercial Heating, Ventilation and Air Conditioning Systems."

END OF SECTION 233100

UNIVERSITY OF MICHIGAN
ARCHITECTURE, ENGINEERING AND CONSTRUCTION

ARCHITECTURE & ENGINEERING
326 East Hoover, Mail Stop B
Ann Arbor, MI 48109-1002
Phone: 734-764-3414
Fax: 734-936-3334

BuildingName
The Description of the Project
P00000000 0000

SPECIFICATION DIVISION 23

NUMBER SECTION DESCRIPTION

DIVISION 23 HEATING, VENTILATING AND AIR CONDITIONING (HVAC)
SECTION 233300 - AIR DUCT ACCESSORIES AND RGD'S

END OF CONTENTS TABLE

DIVISION 23 HEATING, VENTILATING AND AIR CONDITIONING (HVAC)
SECTION 233300 - AIR DUCT ACCESSORIES AND RGD'S

REVISIONS
12-17-2010: APPROVED AS NEW MASTER

PART 1 - GENERAL

1.1 RELATED DOCUMENTS

INCLUDE PARAGRAPH 1.1.A AND B IN EVERY SPECIFICATION SECTION. EDIT RELATED SECTIONS 1.1.B TO MAKE IT PROJECT SPECIFIC.

A. Drawings and general provisions of the Contract, Standard General and Supplementary General Conditions, Division 1 Specification Sections, and other applicable Specification Sections including the Related Sections listed below, apply to this Section.

CAREFULLY EDIT AND COORDINATE RELATED SECTIONS.

RETAIN THE DIVISION 26 ELECTRICAL REFERENCE IN THIS SECTION TO ASSURE THAT ELECTRICAL WORK STANDARDS ARE OBSERVED AND ENFORCED

B. Related Sections:

1. Section 233100: HVAC Ducts and Casings.
2. Section 230900: Mechanical Systems Controls.
3. Section 233600: Air Terminal Units.
4. Division 26: Electrical.

1.2 SUMMARY

A. Section Includes:

1. Sheet metal accessories as shown in the Contract Documents and required for a complete and operable air distribution system
2. Access doors in ductwork.
3. Duct test holes.
4. Duct air turning vanes.
5. Flexible connectors.
6. Fire dampers, fire/smoke dampers, smoke dampers, and combination smoke/isolation dampers.
7. Balance dampers.
8. Iris balance dampers
9. Backdraft dampers.
10. Sound attenuators.
11. Registers, grilles and diffusers.
12. Duct connections to laboratory airflow units.
13. Fume hood low airflow alarm set-up damper.
14. Wire mesh screens.

B. This Section does not include sheet metal accessories for fiberglass reinforced duct (FRP) or other specialty duct systems. Refer to other specification sections for requirements.

C. Section does not include automatic control dampers. See Related Section 230900 Mechanical Systems Controls.

1.3 SUBMITTALS

A. Product Data: Submit performance data, rated capacities, furnished specialties, sound-power ratings, and accessories for each type of product.

B. Duct Silencers: Include pressure drop and dynamic insertion loss data. Include breakout noise calculations for high transmission loss casings.

C. Damper manufacturer's installation instructions.

D. Product Data for each type of product.

E. Shop Drawings:

1. Indicate the location and rating of all dampers on shop drawings and submittals.

F. Operation and maintenance data.

1.4 QUALITY ASSURANCE

RETAIN PARAGRAPHS A AND B IN EVERY PROJECT SPECIFICATION SECTION.

A. Manufacturers and Products: The products and manufacturers specified in this Section establish the standard of quality for the Work. Subject to compliance with all requirements, provide specified products from the manufacturers named in Part 2.

EDIT THE REFERENCE STANDARDS FOR PROJECT REQUIREMENTS.

B. Reference Standards: Products in this section shall be built, tested, and installed in compliance with the following quality assurance standards; latest editions, unless noted otherwise.

C. NFPA 90A, "Installation of Air Conditioning and Ventilating Systems," and NFPA 90B, "Installation of Warm Air Heating and Air Conditioning Systems."

D. SMACNA "HVAC Duct Construction Standards - Metal and Flexible" for acceptable materials, material thicknesses, and duct construction methods, unless otherwise indicated.

E. UL 555C "Standard for Fire Dampers."

F. UL 555S "Standard for Smoke Dampers."

REVIEW WARRANTY TERM PER PROJECT. LONGER WARRANTY PERIOD MAY BE APPROPRIATE FOR CERTAIN TYPES OF WORK. RETAIN THIS ARTICLE IN EVERY PROJECT SPECIFICATION.

1.5 WARRANTY

A. Provide a complete parts and labor warranty for a minimum of one year from the date of Substantial Completion.

PART 2 - PRODUCTS

2.1 ACCESS DOORS IN DUCTWORK

A. Provide access doors in ductwork to permit access to the linkage side of automatic dampers, fire dampers, smoke damper, combination fire/smoke dampers, upstream side of coils, filters, humidifiers, airflow measuring stations, other equipment or devices requiring access or other locations as indicated on Drawings for cleaning, maintenance, or inspection purposes.

B. Hang access doors on heavy gauge continuous hinges and secure in the closed position by means of metal clinching type cam latches. Hinges shall move freely. Where space conditions preclude hinges, provide four heavy duty cam-lock type latches, in addition to a retainer chain.

C. Access doors shall be of double wall insulated construction of not less than 20 gauge sheet metal, neoprene gasketed around the entire perimeter. Insulation between the metal panels shall be of the same thickness as the duct or panel adjacent to the access doors. Doors shall match duct material type, and at a minimum, the pressure class of the duct system in which they are installed.

D. Minimum Size: 24 inches by 24 inches when permitted by duct size. For smaller ducts, provide largest size access door that can be accommodated by duct height or width.

E. Acceptable Manufacturers:

1. Air Balance, Inc.
2. Ruskin Company,
3. Ductmate Industries, Inc.
4. Nailor Industries, Inc.
5. American Warming & Ventilating.

2.2 DUCT TEST HOLES

A. A. Permanent, factory fabricated duct test holes, with air-tight flanged fittings and screw cap. Provide extended neck fittings to clear insulation. Acceptable manufacturer and model:

1. Ventlock Model 699 by Ventfabrics, Inc.

2.3 DUCT AIR TURNING VANES

A. Provide factory manufactured turning vanes in each elbow where inside radius is less than the width of the duct, and in all square elbows located in duct construction of greater than 2 inches w.g.

B. Turning vane assemblies shall be adequately supported and affixed to prevent rattling, breakaway, and shall not deform. Assemblies longer than 12 inches shall be double wall.

C. Turning vanes in negative pressure ductwork with pressure rating above 2 inches shall be installed in accordance with SMACNA Industrial Duct Construction Standard.

D. Turning vanes shall match the duct material construction.

E. In lieu of turning vanes, use long radius elbows when the elbow free area is less than one square foot.

F. Airfoil turning vanes are not permitted.

G. Acceptable Manufacturers:

1. Aero Dyne.
2. Ductmate Industries, Inc.
3. Sheet Metal Connectors, Inc.
4. Duro-Dyne.
5. DynAir Inc.

2.4 FLEXIBLE CONNECTORS

A. Provide flexible connectors of 4-inch minimum fabric width.

B. Fabric for flexible duct connectors at equipment shall be a minimum of 22 oz. glass fabric, double coated with neoprene, fire retardant, flame-proofed, waterproof, airtight, and approved by UL and conforming to NFPA 90A. Flexible connectors susceptible to sweating shall be of the insulated type.

C. Flexible connectors shall be rated for the same pressure as duct or equipment.

D. Flexible connectors in laboratory and process exhaust systems shall be of the material and type suitable for that environment.

E. Acceptable Manufacturers:

1. Senior Flexonics Pathway, Inc.
2. McGill AirFlow LLC, An enterprise of United McGill Corporation.
3. Duro-Dyne.
4. Ventfabrics, Inc.

DESIGNER SHALL EDIT U-M DAMPER CONSTRUCTION AND APPLICATION SCHEDULE DETAIL TO MAKE IT PROJECT SPECIFIC, AND INCLUDE IT ON THE DRAWINGS. SEE:

HTTP://WWW.UMAEC.UMICH.EDU/FOR.ARCHS/STANDARDDETAILS.HTML.

2.5 GENERAL DAMPER CONSTRUCTION REQUIREMENTS

A. Dampers shall be rated for the maximum close-off pressure at the installed location, but not less than the rating as indicated in the Damper Construction and Application Schedule.

B. Dampers installed in galvanized ductwork shall be all galvanized construction including blades, shafts, bearings, linkages, etc. or as indicated in other sections.

C. Dampers installed in stainless steel ductwork, polyvinyl coated ductwork (PCD), or located in any corrosive atmosphere shall be constructed of Type 304 or Type 316 stainless steel construction including blades, shafts, bearings, linkages, etc.

D. Refer to the Damper Construction and Application Schedule on the Drawings for additional requirements. If not on the Drawings, refer to the following location for the Damper Construction and Application Schedule.

1. http://www.umaec.umich.edu/for.archs/StandardDetails.html.

2.6 FIRE DAMPERS, FIRE/SMOKE DAMPERS, SMOKE DAMPERS, AND COMBINATION SMOKE/ISOLATION DAMPERS

DESIGNER SHALL SHOW ALL REQUIRED FIRE, FIRE/SMOKE, SMOKE, AND SMOKE/ISOLATION DAMPERS ON DRAWINGS.

A. General:

1. Devices shall be of the appropriate service for the partition rating into which they are installed.
2. Dampers shall meet the requirements of NFPA 90A and labeled in accordance with the latest editions of UL 555, UL 555S, and UL 555C.
3. Provide dynamic rated dampers.
4. Each damper shall be rated to close against the maximum design air velocity and pressure at its installed location, with an additional 400 fpm velocity and 0.5 in. w.g. static pressure safety factor.
5. Dampers of all ratings and types shall be of the nominal 100 percent face area type, with blade package and frame components out of the airstream (type B). Dampers shall include the required oversize enclosures that shall be sealed by the damper manufacturer for the appropriate duct pressure class. Dampers shall have rectangular, flat oval or round duct collars for connection to mating ductwork.
6. Furnish sleeves and mounting accessories as required per code.

B. Fire Dampers

1. Fire dampers shall be provided as shown on the Drawings and wherever Drawings indicate fire rated partitions.
2. Fusible link temperature rating for fire dampers shall be 165 degrees F, or 50 degrees F above the highest duct system temperature, whichever is greater.

ENGINEER MUST EDIT THE SPECIFICATION TO INCLUDE THE PROJECT SPECIFIC REQUIREMENTS FOR SMOKE AND COMBINATION FIRE/SMOKE DAMPERS. INCLUDE INFORMATION ON REMOTE AND/OR LOCAL OVERRIDES, PRIMARY/SECONDARY HEAT SENSING DEVICE TEMPERATURE SET POINTS, MANUAL OR AUTOMATIC RESET FEATURES, PNEUMATIC OR ELECTRIC ACTUATORS (NOTE THE TEXT BELOW SPECIFIES PNEUMATIC ACTUATORS), AND OTHER REQUIRED FUNCTIONS, AS WELL AS A SEQUENCE OF OPERATION FOR EACH SMOKE AND FIRE / SMOKE DAMPER TYPE.

C. Smoke Dampers and Combination Fire/Smoke Dampers

1. Provide smoke dampers and combination fire/smoke dampers as shown on the Drawings and where architectural drawings indicate smoke/fire rated partitions.
2. Smoke dampers and combination fire/smoke dampers and actuators shall meet the requirements of NFPA 92A and NFPA 92B and shall be labeled as a "Leakage Rated Damper for Use in Smoke Control Systems" in accordance with latest edition of UL 555S. Smoke dampers shall be of low leakage design qualified to UL 555S leakage Class I and shall have a UL 555S elevated temperature rating of 350 degrees F minimum.

3. Supply each smoke damper and combination fire/smoke damper with a factory mounted damper actuator. Combination fire/smoke dampers shall be manufactured with a metal sleeve of appropriate length and thickness for the required damper installation, and the damper actuator shall be installed on the sleeve exterior. Damper actuators shall be pneumatic unless otherwise indicated. Dampers shall fail to the closed position.
4. Damper Frame: Galvanized steel formed into a structural hat channel shape with reinforced corners. The blades shall be airfoil type. Bearings shall be sintered bronze sleeve turning in an extruded hole in the frame. Blade edge seals shall be silicone rubber designed to withstand 250 degrees F and jamb seals shall be stainless steel flexible metal compression type with silicone rubber backing, Class I rated.

ENGINEER MUST ADD THE PROJECT SPECIFIC REQUIREMENTS FOR COMBINATION FIRE/SMOKE DAMPERS NO DETAILS HAVE BEEN PROVIDED IN THIS SECTION.

5. Each combination fire/smoke damper shall also be equipped with a temperature limited re-openable feature as required by Code to meet the smoke control sequence of operation.

D. Smoke/Isolation Damper:

1. Smoke/isolation dampers, typically used at air handling units in discharge and return ductwork, shall comply with NFPA 90A and the above requirements for smoke dampers, except that dampers shall have UL rated pneumatic actuators, with a minimum of one actuator for each sixteen square feet of damper area.

E. Acceptable Manufacturers:

1. Ruskin Company.
2. Air Balance Inc, a Mestek Company.
3. American Warming & Ventilating Co.
4. Vent Products Co., Inc.
5. Nailor Industries Inc.
6. Greenheck.

2.7 BALANCE DAMPERS

DESIGNER SHALL SHOW ALL REQUIRED BALANCE DAMPERS ON DRAWINGS.

A. For pressure dependent systems, as a minimum, provide balance dampers at each branch duct, at each outlet or inlet, and as indicated for supply air, return air, and exhaust air duct systems.

B. For pressure independent systems, as a minimum, balance dampers shall be provided at each branch for each outlet downstream of each supply air Terminal Airflow Unit (TAU) or Laboratory Terminal Airflow Unit (LTAU) and at each branch inlet upstream of each return air or exhaust air TAU or LTAU box and as indicated.

C. Comply with SMACNA requirement and provide continuous rod and bearings on each end of shaft regardless of pressure class.

D. Use 3/8 inch continuous square rod and 18 gauge stiffened blade for duct sizes 18 inches wide by 18 inches high and smaller, or 12 inches diameter and smaller.

E. Use 1/2 inch continuous square rod and 16 gauge stiffened blade for single blade dampers in ducts 19 inches to 48 inches wide by a maximum of 10 inches high; and in 12-inch to 16-inch round ducts.

F. When multi-blade dampers are required, use a manufactured 16 gauge, stiffened, opposed blade damper in a 14 gauge hat channel steel frame with reinforced corners. All hardware shall be galvanized, except use brass trunnions and bronze, steel, or synthetic bearings.

G. Quadrant shall be locking type.

H. Quadrant end of damper rod shall be factory slotted to indicate blade position.

I. Provide galvanized or stainless steel sheet metal "hat section" on ducts with exterior insulation so that quadrant will be exposed. Provide tight sealing nylon brushing at duct opening for damper shaft under hat section.

J. Each square rod shall be installed so that quadrant will be accessible for adjusting.

K. Provide 24-inch-by-24-inch access door through ceiling or wall construction for each balance damper that is not accessible.

L. Acceptable Manufacturers:

1. Ruskin Company.
2. Young Regulator Company,
3. American Warming & Ventilating Co.
4. Vent Products Co., Inc.
5. Arrow United Industries.
6. Greenheck.

2.8 IRIS BALANCE DAMPERS

A. Supply and exhaust air duct connections at ventilated animal racks, and where indicated, shall utilize Iris type balance dampers.

B. Damper shall use interlocking steel plates and a calibrated positioning system to form an adjustable aperture. Differential pressure ports on either side of aperture shall allow airflow measurement from catalogued (damper position vs. differential pressure) performance curves.

C. Accuracy of measurement shall be plus or minus 7 percent with one diameter of straight duct upstream of damper.

D. Damper shall be constructed of heavy gauge galvanized steel and suitable for slip-in duct installation.

E. When indicated, provide positive seal type iris dampers capable of being set at a fully closed position.

F. Acceptable Manufacturer:

1. Continental Fan Manufacturing Inc.

2.9 BACKDRAFT DAMPERS

A. Frames shall be flanged, a minimum of 3 inches wide, and a minimum of 20 gauge roll formed galvanized steel or 0.125 inch extruded aluminum with pre-punched mounting holes and welded corner clips for maximum rigidity.

B. Blades shall be a single piece, with a maximum width of 6 inches, counter-balanced, and shall be constructed of a minimum of 28 gauge roll formed galvanized steel or 0.070 inch extruded aluminum. Blade ends shall overlap for maximum weather protection.

C. Blade seals shall be extruded vinyl and mechanically attached to blade edge.

D. Bearings shall be corrosion resistant synthetic.

E. Linkages shall use a galvanized tie bar with stainless steel pivot pins.

F. Axles shall be stainless steel.

G. Mounting shall be suitable for the required orientation.

H. Acceptable Manufacturers:

1. Young Regulator Company.
2. American Warming & Ventilating Co.
3. Vent Products Co., Inc.
4. Arrow United Industries.

2.10 SOUND ATTENUATORS

A. Silencers shall be of the size, configuration, capacity, and acoustic performance as indicated on drawings.

B. Insertion losses listed in the schedule are minimums allowable and pressure drops are maximum allowable. Silencer performance data shall be in accordance with ASTM E477 and validated by a National Voluntary Laboratory Accreditation Program (NVLAP) accredited independent testing laboratory.

C. All silencers shall be factory fabricated and supplied by the same manufacturer. Inlet and outlet dimensions must be equal to duct sizes shown whether rectangular or round. Duct transitions at silencers are not permitted unless shown.

D. Outer casing shall be a minimum of 20 gauge G-90, galvanized steel. Inner partitions shall be minimum of 24 gauge G-90 galvanized steel. Casings shall be airtight.

E. Filler material shall be inorganic glass fiber of proper density to obtain specified performance and packed under a minimum of 5 percent compression to eliminate voids due to vibration and settling. Material shall be inert, vermin-proof, moisture-proof, and shall be totally encapsulated with a 1.5 mils thick Mylar or Tedlar film.

F. Combustion rating for fill shall be in accordance with ASTM E84, NFPA 255, or UL 723.

G. Provide packless type attenuator when indicated.

H. Mounting shall be suitable for the required orientation.

I. Acceptable Manufacturers:

1. Industrial Acoustics.
2. SEMCO Incorporated.
3. Vibro-Acoustics.

REVIEW THIS SECTION CAREFULLY AND SPECIFY DIFFUSERS THAT ARE APPROPRIATE FOR THE PROJECT OR APPLICATION. ADD SPECIALTY DIFFUSERS AS REQUIRED.

2.11 REGISTERS, GRILLES AND DIFFUSERS

A. General:

1. Diffusers, grilles, and registers shall be of steel or aluminum construction, factory primed and painted with baked enamel or acrylic, white color, unless otherwise scheduled.
2. Diffusers, registers and grilles shall be compatible with the designed ceiling/wall type. Provide registers and grilles with frames that are compatible with adjacent construction, with countersunk mounting holes. Refer to architectural drawings for exact details of ceiling/wall construction.
3. Engineering data shall be based upon tests conducted in accordance with the latest ASHRAE Standard 70, Method of Testing for Rating the Performance of Air Outlets and Inlets at non-isothermal conditions. Published Noise Criteria (NC) data shall be determined based upon a 10 dB room attenuation across all octave bands. Lab test reports shall be available upon request.

B. Supply diffuser:

1. Diffusers shall be of the restricted multi-orifice jet induction and air mixing type, consisting of louvered sections with built-in diffusing vanes.
2. Diffusers shall be square with neck sizes to match connecting duct size.
3. Diffusers shall be assembled for indicated patterns that provide 1-way, 2-way, 3-way or 4-way air discharge with each side delivering a quantity of air proportional to the area served.
4. The diffusers shall be constructed with an integral leak-proof collar extending minimum 1 inch above the core to accommodate duct connection. Square and rectangular collars shall have welded corners.

C. Return and Exhaust diffuser:

1. Diffusers shall be square with neck sizes to match connecting duct size.
2. The diffusers shall be constructed with an integral leak-proof collar extending minimum 1 inch above the core to accommodate duct connection. Square and rectangular collars shall have welded corners.

D. Sidewall Adjustable Supply Register:

1. Sidewall registers shall have mitered corners, double deflection adjustable blades, and horizontal front blades.

E. Low Wall Return/Exhaust registers:

1. Return and exhaust registers shall have (1) set of fixed blades, 42 to 45 degree deflection.
2. Wall return and exhaust registers mounted 18 inches AFF or lower, shall be have mitered corners, fixed blades, horizontal front louvers. Frame and blade shall be manufactured of minimum 8 gauge aluminum or 12 gauge steel for rugged use.
3. Low wall registers used in UMHHC facilities for clinical rooms shall utilize a hinged register face with turn screws for access to filter media, mounted in a factory provided channel behind the register face.

F. Supply and Return Bar Grille

1. Bar grilles shall be extruded aluminum, nominal 1/8 inch wide bars with 0 degree deflection, on maximum 1/4 inch centers, or as scheduled.
2. Continuous grilles over 72 inches in length shall be butted together using keyed splices for precise alignment.
3. Concealed spring latch fasteners shall be used for attaching grille to plaster frame. No screw holes shall be visible on plaster frame or grille.
4. Provide blank-off baffles for inactive sections of grilles, as noted on the drawings.

G. Plenum Slot Diffusers

1. Diffusers shall be insulated for supply and uninsulated for return and shall have of the slot widths, number of slots, and lengths as indicated on the Drawings.
2. Units shall be constructed of a minimum of 24 gauge galvanized steel with a black face.
3. Inlets shall be drawn from the plenum wall to eliminate leakage and shall have a minimum of a 1 inch duct connection flange.
4. Slot face shall be constructed of double metal thickness to provide rigidity and pattern controller shall be of the adjustable type.
5. Provide blank-off baffles for inactive sections, as indicated on Drawings.

H. Acceptable Manufacturers:

1. Tuttle & Bailey.
2. MetalAire.
3. Titus.
4. Price Industries.
5. Nailor Industries, Inc.

2.12 DUCT CONNECTIONS TO LABORATORY TERMINAL AIRFLOW UNITS

A. Inlet and outlet connections may utilize draw bands with dual bolts/nuts and elastomeric gasket or, as a minimum, be permanently attached using appropriate fasteners and sealed with appropriate duct sealant.

2.13 FUME HOOD LOW AIRFLOW ALARM SET-UP DAMPER

A. Provide a fume hood low airflow alarm set-up damper with locking quadrant at the outlet (downstream) of each fume hood laboratory terminal airflow unit.

B. Damper shall be constructed of a minimum of 16 gauge Type 304 stainless steel with bearings and extended shaft. End of shaft shall indicate blade position.

C. Gauge and construction of sleeve and blade components shall be as required to meet project duct static pressure ratings.

2.14 WIRE MESH SCREENS

A. Screen assemblies shall be removable.

B. Mesh: 1/2 -inch square pattern, 1/16 inch galvanized wire, interwoven, welded at wire intersections and to the frame to prevent rattles.

C. Frames: Minimum of 1 inch by 1 inch by 1/8 inch galvanized steel angles for duct sizes through 24 inches, 1-1/2 inch by 1-1/2 inch by 3/16 inch for duct sizes between 25 inches to 48 inches, and 2 inches by 2 inches by 3/16 inch for ducts larger than 48 inches continuous around perimeter of screen. Provide intermediate supports to limit screen deflection to 1/16 inch at maximum design airflow.

PART 3 - EXECUTION

3.1 SHEET METAL ACCESSORIES INSTALLATION

A. Install sheet metal accessories in accordance with manufacturers' recommendations, Contract Drawings and approved submittals.

B. Sheet metal materials shall be free of pitting, seam marks, roller marks, stains, discolorations, and other imperfections.

C. Refer to other related sections for installation requirements, including joint connections and sealant requirements.

D. Install duct accessories according to applicable details in SMACNA "HVAC Duct Construction Standards - Metal and Flexible."

E. Install duct accessories of materials suited to duct materials. Use galvanized-steel accessories in galvanized-steel ducts, stainless-steel accessories in stainless steel ducts, use aluminum accessories in aluminum ducts.

3.2 DUCT ACCESS DOORS INSTALLATION

A. Locate access doors so they can be opened completely without interferences and to allow easy access by maintenance personnel.

B. Fire, smoke, combination fire/smoke damper or similar automatic shutting device access doors shall be mounted downstream (after shutoff) to permit resetting and inspection.

C. Doors shall seal tightly into frame.

D. Label access doors to note equipment that is accessed through the door. Labels and lettering on labels shall be in accordance with the mechanical identification section. Provide 1-inch-high minimum letters.

3.3 DUCT AIR TURNING VANES INSTALLATION

A. Mount the outboard-most vane in the duct heel. Vanes shall be spaced across the entire corner diagonal, parallel to the airstream, adequately supported and affixed to prevent rattle and breakaway.

3.4 DUCT TEST HOLES INSTALLATION

A. Provide duct test holes where required for testing and balancing purposes and as shown on Drawings.

3.5 DAMPER- INSTALLATION - GENERAL (INCLUDING AUTOMATIC CONTROL DAMPERS FURNISHED UNDER RELATED SECTION)

A. Dampers shall be installed square and plumb to casing, duct, wall, etc. without racking. Align and adjust dampers to ensure proper opening and closing without binding or hesitation.

B. Seal completely around frame.

C. Install dampers designed for horizontal mounting in horizontal orientation, and dampers designed for vertical mounting in vertical orientation.

D. Adequately reinforce multiple section dampers per manufacturer's recommendations.

E. Install dampers so quadrants will be accessible for adjusting.

F. Coordinate access through ceilings or walls to ensure each damper is accessible.

TO MINIMIZE DUCT NOISE GENERATED BY VOLUME DAMPERS, SMACNA RECOMMENDS LOCATING DAMPERS AT LEAST TWO DUCT DIAMETERS FROM FITTINGS AND AS FAR AWAY AS POSSIBLE FROM OUTLETS.

G. Install volume dampers at points on supply, return, and exhaust systems where branches extend from larger ducts. Where dampers are installed in ducts having duct liner, install dampers with hat channels of same depth as liner, and terminate liner with nosing at hat channel.

H. Set dampers to fully open position before testing, adjusting, and balancing.

3.6 FIRE, SMOKE, AND COMBINATION FIRE/SMOKE DAMPERS INSTALLATION

A. Provide sleeves, mounting angles, and all other required accessories.

B. Fire dampers shall not be installed in hazardous exhaust systems.

C. Demonstrate re-setting of fire dampers to authorities having jurisdiction.

D. Install fire, smoke, and combination fire and smoke dampers according to UL listing.

3.7 FLEXIBLE CONNECTORS INSTALLATION

A. Flex connectors shall be used in all ductwork that crosses building expansion joints and at attachment to any equipment mounted on vibration isolators, and inlets and outlets of fans.

B. The connectors shall be installed as close to equipment as practical and the clear gap at rest shall not be less than 3 inches.

C. There shall be no tension of the fabric under static or dynamic loads. Connector shall be free of wrinkles caused by misalignment or fan reaction. End and overlaps shall be sealed airtight.

D. Check connections during operation for leaks and binding.

E. Outdoor flexible connectors shall be protected by a three-sided sheet metal weatherhood, open on the bottom, securely anchored on one side of the flexible connector only. Weatherhood to be of the same material as the ductwork.

3.8 REGISTERS, GRILLES AND DIFFUSERS INSTALLATION

A. Support devices independent of the ceiling construction when required for safe and workmanlike installation.

B. Paint visible duct, mounting clips, and accessories behind registers and grilles flat black.

C. Adjust throw patterns as shown on Drawings.

3.9 FUME HOOD LOW AIRFLOW SET-UP DAMPER INSTALLATION

A. Install the damper a minimum of four duct diameters downstream of each fume hood laboratory terminal airflow unit.

B. Assure the damper is mounted downstream of any differential pressure switch probe or bulkhead fitting.

3.10 WIRE MESH SCREEN INSTALLATION

A. Screen assemblies shall be firmly affixed and shall not vibrate.

3.11 FIELD QUALITY CONTROL

A. Tests and Inspections:

1. Operate dampers and operators to verify full range of movement.
2. Inspect locations of access doors and verify proper labeling and access to equipment.
3. Operate fire, smoke, and combination fire and smoke dampers to verify full range of movement and verify that proper heat-response device is installed.
4. Inspect turning vanes for proper and secure installation.

INCLUDE THIS ARTICLE IN EVERY SPECIFICATION SECTION.

3.12 COMMISSIONING

A. Perform the commissioning activities as outlined in the Division 01 Section Commissioning and other requirements of the Contract Documents.

END OF SECTION 233300

UNIVERSITY OF MICHIGAN
ARCHITECTURE, ENGINEERING AND CONSTRUCTION

ARCHITECTURE & ENGINEERING
326 East Hoover, Mail Stop B
Ann Arbor, MI 48109-1002
Phone: 734-764-3414
Fax: 734-936-3334

BuildingName
The Description of the Project
P00000000 0000

SPECIFICATION DIVISION 23

NUMBER SECTION DESCRIPTION

DIVISION 23 HEATING, VENTILATING AND AIR CONDITIONING (HVAC)
SECTION 233400 - FANS

END OF CONTENTS TABLE

DIVISION 23 HEATING, VENTILATING AND AIR CONDITIONING (HVAC)
SECTION 233400 - FANS

REVISIONS:

MAJOR REVISIONS – D. KARLE FOR AEC MECH TECH TEAMS - HVAC/CONTROLS GROUP, OCT 13, 2006.

REVISED SECTION 1.3 TO INCLUDE NEW AMCA STANDARD FOR INDUCED FLOW FANS D. KARLE FEB 15, 2008.

REVISED TO REQUIRE CERTAIN PRODUCT DATA W/SUBMITTALS, PER MECH TECH TEAM. D. KARLE, 7/29/08.

REVISED HIGH PLUME INDUCTION FAN SPEC TO ALLOW MULTIPLE FAN MANUFACTURERS TO BE IN COMPLIANCE, PER MECH TECH TEAM. D. KARLE, 09/10/09.

REVISED CONTENT AND FORMAT MARCH 2011

7-19-2012: ADDED THAT MULTIPLE BELTS ARE TO BE PROVIDED AS A MATCHED SET, SO THAT BELT DRIVE INFO IN 220500 COULD BE REMOVED AND ALL BELT DRIVE INFO CARRIED IN THE SPECIFIC SECTIONS WHERE BELT DRIVES ARE USED. D. KARLE FOR MTT.

PART 1 - GENERAL

1.1 RELATED DOCUMENTS

INCLUDE PARAGRAPH 1.1.A AND B IN EVERY SPECIFICATION SECTION. EDIT RELATED SECTIONS 1.1.B TO MAKE IT PROJECT SPECIFIC.

A. Drawings and general provisions of the Contract, Standard General and Supplementary General Conditions, Division 1 Specification Sections, and other applicable Specification Sections including the Related Sections listed below, apply to this Section.

B. Related Sections:

1. Section 019100/019110: Commissioning.
2. Section 220513: Motors.
3. Section 220548: Vibration Control
4. Section 233300: Air Duct Accessories and RGDs
5. Section 230593: Testing, Adjusting, and Balancing
6. Section 230900: Mechanical Systems Controls.
7. Division 26: Electrical.

1.2 SUMMARY

ROOF CURBS ARE NOT SPECIFIED IN THIS SECTION. IF A ROOF CURB IS NEEDED, MAKE SURE IT IS SPECIFIED IN THE ARCHITECTURAL SPEC. SECTIONS OR ADD TO THIS SECTION.

A. Section Includes:

1. Centrifugal Fans:

a. Housed centrifugal fans.
b. Utility Sets.
c. Domed roof, up blast roof and sidewall exhaust fans.
d. Ceiling fans.
e. Cabinet fans.
f. Inline fans:
1) Square Inline Centrifugal.
2) Tubular Inline Centrifugal.

2. Inline Fans:
a. Propeller fans.
b. Tube-axial fans.
c. Vane-axial fans.

3. Specialty Use Fans:
a. Plenum fans.
b. High-plume induction type lab fans.
c. Smoke purge fans.
d. Kitchen exhaust fans.

1.3 SUBMITTALS

A. Submit the following product data for each unit:

1. Static pressure, airflow (CFM), speed (RPM), system curve, outlet velocity and fan tag for each fan.
2. Certified fan curves showing fan performance with the system operating points identified on curves. Surge, or "Do not operate" line, shall also be indicated on fan curve.
3. Performance curves shall be published by the fan manufacturer and based on tests in accordance with AMCA 210. The curves shall be drawn with the fan flow rate plotted against fan total pressure and fan brake horsepower as per section 10.2.1 of AMCA 210.
4. Bearing sizing and life calculations for each similar size and type of fan. Fan bearing calculations shall be based on fan maximum operating conditions including belt pull. Calculations shall be provided for both fan bearings and motor bearings.
5. Sound power levels for each size and type of fan. Sound levels shall be provided for all 8 octave bands for discharge of fan, inlet to fan, and radiated noise through casing.
6. Dimensional data for each size and type of fan, including operating and maintenance clearances.
7. Details of vibration isolation bases including selections for vibration isolation springs.
8. Details of fan discharge flexible duct connector.
9. Details of motor and belt guards.
10. Motor ratings, electrical characteristics, and motor accessories.
11. Fan anti-corrosion coating data sheets.

1.4 QUALITY ASSURANCE

A. Manufacturers and Products: The products and manufacturers specified in this Section establish the standard of quality for the Work. Subject to compliance with all requirements, provide specified products from the manufacturers named in Part 2.

B. Reference Standards: Products in this section shall be built, tested, and installed in compliance with the following quality assurance standards; latest editions, unless noted otherwise.

1. AMCA Standard 99-0401, "Classification for Spark Resistant Construction."
2. ANSI/AMCA Standard 99-2404, "Drive Arrangements for Centrifugal Fans."
3. ANSI/AMCA Standard 99-2406, "Designation for Rotation and Discharge of Centrifugal Fans."
4. AMCA Standard 99-2408, "Operating Limits for Centrifugal Fans."
5. ANSI/AMCA Standard 210 ANSI/ASHRAE 51, "Laboratory Methods of Testing Fans for Certified Aerodynamic Performance Rating."
6. ANSI/AMCA Standard 260 "Laboratory Methods of Testing Induced Flow Fans for Rating."
7. ANSI/AMCA Standard 300, "Reverberant Room Method for Sound Testing of Fans."
8. ANSI/AMCA Standard 301, "Methods for Calculating Fan Sound Ratings from Laboratory Test Data."
9. ANSI/AMCA Standard 204, "Balance Quality and Vibration Levels for Fans."
10. UL-705, "Power Ventilators" (applies only for fans exposed to outdoor conditions).
11. UL-762, "Power Roof Ventilators for Restaurant Exhaust Appliances."
12. UL-793, "Standard for Automatically Operated Roof Vents for Smoke and Heat."
13. American Bearing Manufacturers Association (ABMA) Standards.

1.5 DELIVERY, STORAGE, AND HANDLING

A. Fan manufacturer shall provide protection to insure that the interior and exterior of each fan is completely protected from dirt or weather during shipping. Openings shall be covered with sealed sheet metal, plastic or other durable means to ensure unit cleanliness is maintained.

1.6 WARRANTY

A. Provide a complete parts and labor warranty for a minimum of one year from the date of Substantial Completion.

PART 2 - PRODUCTS

2.1 MANUFACTURERS

A. Acceptable Manufacturers:

1. All fan types specified in this Section, except Vane Axial, Tube Axial, and High-Plume Induction Type Lab Fans:
   a. Loren Cook Co.
   b. Acme.
   c. Twin City.
   d. Aerovent.
   e. Greenheck.

f. Trane.
g. Barry Blower.
h. Penn.

2. Vane-Axial and Tube-Axial:
   a. Buffalo Fan Co.
   b. Howden Buffalo, Inc.
   c. Woods.
   d. Trane.
   e. Greenheck.

IF FRP INDUCTION FANS ARE REQUIRED, THE FOLLOWING MANUFACTURER MAY BE ADDED WITH APPROVAL FROM U-M HVAC MECH TEAM. CONSULT WITH U-M DESIGN MANAGER. MANUFACTURER: M-K PLASTICS.

3. High-Plume Induction Type Lab Fans:
   a. Strobic.
   b. Greenheck Vektor.

2.2 GENERAL CONSTRUCTION- ALL FANS

A. Provide balanced variable sheaves for motors 7.5 HP and under and fixed sheaves for motors 10 HP and over. Size variable sheaves at midpoint of specified operating conditions to allow field adjustment up or down during balancing procedures. Where fixed speed sheaves are specified for a specific fan, provide one (1) additional sheave set, if required, for final balancing.

B. Fan selection and ratings shall be based on tests made in accordance with AMCA 210.

C. Fans shall be AMCA licensed and shall bear the AMCA seal for both sound and performance levels.

D. Fan shall be minimum Class I construction with proper UL label.

E. The specified fan RPM, outlet velocity, and tip speed are the maximum acceptable. The motor horsepower, CFM, and static pressure are the minimum acceptable.

F. Unless noted otherwise by specific fan type or per schedule, fan housing shall be heavy gauge continuous welded corrosion resistant steel construction with fan scroll and bearings supported from structural steel framework.

G. All fasteners shall be corrosion resistant type.

H. Fan housing shall be of suitable thickness and bracing required for stable and rigid construction, with no deflection, and to prevent vibration and pulsation.

I. Fans having duct-connected inlets shall be provided with a flanged inlet and/or outlet collar matching companion flange.

J. Provide OSHA belt guards on all belt driven fans.

K. Fans shall be spark-proof Type A, B or C (AMCA 99-0401) as required by application.

L. For exterior mounted fans, a weatherproof housing shall be provided with ventilation grilles to cover motor and drive assembly.

M. Provide special construction fans, such as spark-proof, explosion-proof, or specially coated fans as required by schedules or as specified herein.

N. Provide birdscreen on fans exposed to the exterior environment.

O. Provide adequate space for service of fan, motor and bearings.

P. The fan shaft shall be solid high carbon steel, accurately turned, ground and polished, and ring gauged for accuracy.

Q. Recommended bearing manufacturer tolerances shall be met in the area of the shaft in contact with the bearings.

R. Shafts must be dial indicator inspected for straightness after the keys are cut.

S. Fan shaft shall be coated with rust inhibitive coating.

T. Fan wheel assembly or propeller assembly shall be statically and dynamically balanced prior to fan assembly.

U. The entire rotating assembly shall be designed so the first critical speed is at least 25% over the maximum fan class speed.

V. Fan Shaft Bearings

1. Fan bearings shall be bolted on a rigid welded steel framework integral with the housing.
2. Bearings shall be designed and individually tested specifically for use in air handling applications.
3. Bearings shall be sized for a minimum L-10 life of 200,000 hours at the maximum fan class operating speed and horse power. Selection shall account for all operating conditions including belt pull. Bearings shall be selected in accordance with standards set forth by the American Bearing Manufacturers Association (ABMA).
4. Bearings shall be grease lubricated self-aligning ball or roller type. Provide tapered roller bearings for vertical applications.
5. Bearing housings shall be solid cast iron, pillow block or flange mount type. Provide split pillow block bearings where required by the application speed.
6. Stamped bearing housings are permitted on fans of 1/4 HP or less.
7. Bearings shall be of the type that can be re-lubricated, and shall be equipped with grease fittings.

W. Where fan bearings are not easily accessible or are installed in a hazardous exhaust airstream, provide clear plastic grease leads, properly secured to avoid damage or fatigue, routed to an accessible location.

X. Fan Drive

1. Fan drive shall be a multiple V-belt type sized for 1.65 times the fan motor horsepower. Sheaves shall be fixed or adjustable based on fan motor horsepower as specified herein before. Fan sheave shall have a tapered lock, split and keyed hub. Grove spacing on equipment and motor pulleys shall align. For fans 1/2 HP and larger, quantity of belts shall be such that if any one belt fails, remaining belts shall allow fan to continue functioning as designed. Multiple belts shall be provided as a matched set.
2. Motors shall meet requirements as specified in Motors section.
3. Motor shall be 1800 rpm maximum for belt driven or direct drive fans.
4. On OSHA approved type fan drive guard shall be provided with provision for RPM measurement at both motor and fan without removing the guard. The guard shall be made of 1/2 in., 16 gauge flattened expanded steel, wrapped around a 16 gauge channel frame suitably braced to prevent vibration. Guard shall be G-90 galvanized, or painted to match fan housing paint.
5. Fan belts shall be oil resistant 24,000-hour non-static belts.

Y. Provide thrust arrestors as required to limit movement of the fan upon start-up.

Z. Provide riveted, engraved aluminum nameplate containing pertinent, specific fan data, including manufacturer, model, serial number, and electrical data, etc.

2.3 PAINTING

A. Each fan component shall be thoroughly cleaned, degreased and deburred.

B. Prior to assembly, prime coat all non-galvanized ferrous metal parts with zinc rich primer (minimum 70 percent zinc), total dry film thickness of not less than 1.3 mils.

C. For interior units, finish paint all non-galvanized ferrous metal parts with alkyd enamel paint.

1. Low-luster interior enamel; total dry film thickness of not less than 2.6 mils.

D. For exterior units, finish paint all non-galvanized ferrous metal parts with alkyd enamel paint.

1. Semi-gloss exterior enamel; total dry film thickness of not less than 2.6 mils.

E. Aluminum and stainless steel parts do not require painting.

F. Special coatings for corrosive exhaust systems are specified in the exhaust fan specifications.

2.4 CENTRIFUGAL FANS

A. General

1. Centrifugal type fans shall be belt drive, unless noted otherwise
2. Fans shall be backwardly inclined, airfoil, or flat blade type with a minimum of 9 blades.
3. Fans shall have sharply rising pressure characteristics at the operating point specified and shall be quiet and stable in operation. Horsepower characteristics shall be self-limiting (non-overloading) and at peak value at the specified operating point.
4. Each fan base shall be fully assembled with motor and drive on a structural steel base.

B. Fan Base

1. Fan with motor and drive shall be mounted on a structural steel base.
2. Base shall be welded. After welding, the base shall be cleaned, primed and painted to match fan coating.
3. Base steel sizing and construction shall be sufficient to allow the entire assembly to withstand the rigors of shipping and rigging.
4. Base shall be provided with lifting lugs and motor slide rails.
5. Fans with inertia bases shall be in accordance with Mechanical Vibration Control section.
6. Bases shall be constructed with gusseted brackets to accommodate field installed spring isolators as specified in Mechanical Vibration Control section.

C. Fan Housing

1. Fans having wheel diameters 36 in. and larger shall have horizontally flanged split housings as required for installation.
2. Fan housing and inlet shall be constructed to allow the fan wheel(s) to be removed through the inlet opening when the inlet cone is removed.
3. Provide a quick opening inspection door with heavy duty latches.
4. A 1/2 in. NPT tapped 3/4 in. diameter pipe coupling drain connection shall be welded to the fan scroll at the lowest point, equipped with a pipe plug.
5. Class I and II fans shall be convertible to a minimum of 8 standard discharge arrangements.
6. Provide a Fan cut-off to deliver good pressure distribution.

D. Fan Inlet and Wheel Cone

1. Provide a precision die-spun or formed, and matched inlet and wheel cones for streamlined airflow into the wheel to ensure full loading of the blades.
2. Inlet and wheel cones shall be hyperbolic. Radial side sheets are not acceptable.
3. Inlet cone shall be heavy gauge, bolted to fan housing to allow for removal.
4. Fans that are not duct-connected shall be provided with inlet/outlet screen(s). Screen(s) shall be standard manufacturer provided screen or galvanized maximum nominal 1 in. by 1 in. mesh fabricated 10 gauge steel.

5. Hubs shall be straight bored or use taper lock bushings, keyed and set screwed to shaft for positive attachment. Hubs shall be securely riveted or bolted to the backplate or center plate. Bushed hubs are not acceptable.
6. Double-width double-inlet fans shall be a single wheel of the common center plate design or 2 single-width single-inlet wheels back-to-back, each keyed and set screwed to a common shaft.
7. Fan blades shall be continuously welded to the inlet hub and the backplate.
8. Wheel center plate or backplate shall be heavy gauge steel construction with a minimum gauge as indicated in material construction schedule.

E. Housed Centrifugal Fans

1. Housing shall be per Related Section "Custom Air Handling Units."
2. Access doors shall be per Related Section "Custom Air Handling Units."

F. Utility Set Fans

1. Utility sets shall meet all applicable centrifugal fan specification requirements.

G. Domed Roof, Up Blast Roof and Sidewall Exhaust Fans

1. General:
   a. Housing shall be constructed of heavy gauge spun aluminum with a rigid internal support structure.
   b. Fan wheel shall be backward inclined.
   c. Drive frame assembly shall be constructed of heavy gauge steel.
   d. Motors and drives shall be mounted on vibration isolators, out of the air stream.
   e. Fresh air for motor cooling shall be drawn into the motor through a tube free or contaminants or through a space between the fan shroud and the motor cover.
   f. Fan drives shall be sized for 1.5 times the motor horsepower. Pulleys shall be cast type, keyed and securely attached to the wheel and motor shafts.
   g. Motor pulleys shall be adjustable for final balancing.
   h. Provide a factory-installed disconnect switch, wired from the fan motor to a junction box installed within the motor compartment. Provide a conduit chase through the base to the motor compartment.
   i. When backdraft dampers are installed below fan, provide a heavy gauge hinge kit to allow entire fan to tilt away from roof curb for access to dampers. Construct hinge kit with aluminum hinges and hold open cables for field installation.
2. Roof-mounted up blast exhaust fans shall have a leak proof housing constructed with a one-piece windband with an integral rolled bead, and shall be joined to the curb-cap with a continuously welded seam.
3. Sidewall mounted exhaust fans shall have a leak proof housing constructed with a one-piece windband with an integral rolled bead. Provide a mounting plate that will be attached and sealed to the wall prior to installing fan.

H. Ceiling Fans

1. Fans shall be direct drive.
2. Outlet duct collar shall include an aluminum backdraft damper and shall provide for connection to ductwork as required.
3. Grille shall attach firmly and securely to housing and shall be easily removable for access to motor.
4. Fan wheel shall be forward curved.
5. Mount motor on vibration isolators.
6. Access to wiring shall be external.
7. Motor disconnect shall be internal and of the plug-in type.
8. Sound power rating shall not exceed 5 sones.

I. Cabinet Fans

1. Duct mounted fan shall be belt-driven, inline type.
2. Housing shall be rectangular, galvanized steel and shall include rectangular duct mounting collars.

CAUTION, FORWARD CURVED FANS MAY OVERLOAD IF RESISTANCE DOES NOT MEET DESIGN ASSUMPTIONS (IF RESISTANCE IS LESS THAN DESIGN ASSUMPTIONS).

3. Fan wheel shall be backward inclined or forward curved.
4. Fan drives shall be sized for 1.65 times the motor horsepower. Pulleys shall be cast type, keyed and securely attached to the wheel and motor shafts.
5. Motor pulleys shall be adjustable for final balancing.
6. Provide a hinged or removable panel in the fan cabinet of sufficient size to allow access for service to all internal fan components without dismantling cabinet.

J. Centrifugal Inline Fans

1. Tubular Inline Centrifugal
   a. Fan housing shall be provided with mounting brackets at both inlet and discharge suitable for hanger rods or bolting directly to structure.
   b. Fan shall be suitable for horizontal or vertical mounting.
   c. Motor, drive and bearings shall be out of the airstream and housed to facilitate ease of maintenance. Motor cooling shall be through the fan drive and motor housing. Housing for motor drive and bearings shall be of same construction as the fan housing.
2. Square Inline Centrifugal
   a. Fan housing shall be of bolted and welded construction utilizing corrosion resistant fasteners. Housing shall include airflow straightening vanes and integral duct flanges. Adjustable motor plate shall utilize threaded studs for positive belt tensioning. Access doors and mounting feet shall be located as required for the specified position.
   b. Construct fan wheel of 100 percent aluminum, including a precision-machined cast aluminum hub. Wheel inlet shall overlap an aerodynamic aluminum inlet cone to provide maximum performance and efficiency.

2.5 INLINE FANS

A. General: The aerodynamic design of the fan is such that the maximum power absorbed by the impeller occurs within the normal working range, i.e., the fan has a non-overloading characteristic.

B. Propeller Fans

CONSIDER IF FAN SHOULD BE BELT OR DIRECT DRIVE. CONSIDER IF THE FOLLOWING ACCESSORIES ARE REQUIRED FOR YOUR APPLICATION: WEATHER HOOD, FILTERS, ACTUATED (INSTEAD OF GRAVITY) BACK-DRAFT DAMPERS, DIFFUSERS.

1. Entire fan shall be heavy duty, industrial type construction.
2. Provide direct or belt drive fans, as scheduled.
3. Construct fan panel of heavy gauge plate steel with a die-formed or spun venturi-shaped inlet cone built into the panel.
4. Fan panel edges shall be formed back. Corners shall be welded and ground.
5. Fan wheel, motor, and bearings shall be supported from fan panel using structural channel or heavy plate steel. Bearing housings and motor base shall be shall be mounted on a heavy steel plate spanning the 2 vertical support members. All construction shall be welded or bolted.
6. Wheel shall have a minimum of 4 propeller blades, die-formed constructed of heavy gauge steel or aluminum. A reinforcing gusset shall be welded or riveted to the blades and to a machined hub.
7. Provide a protective welded-wire steel guard to completely enclose the motor/drive/fan assembly.
8. Provide heavy duty gravity operated back draft dampers made of galvanized steel, with blade and jamb seals.

YOUR APPLICATION MAY NOT REQUIRE A DAMPER GUARD. DELETE BELOW IF NOT REQUIRED.

9. Provide an OSHA damper guard that completely encloses the damper. Damper guard shall consist of galvanized expanded metal screen welded to a galvanized metal frame.

C. Tube-Axial Fans

1. Fans shall be Arrangement No.9 for belt drive or Arrangement No.4 for direct drive.
2. Fan casing, flanges and supports shall be of suitable thickness and bracing required for stable and rigid construction, with no deflection, and to prevent vibration and pulsation.
   a. Fans 38 in. diameter or less shall be minimum 12 gauge construction.
   b. Fans over 38 in. diameter shall be min 10 gauge construction.
3. Fan casings shall be fitted with mounting legs or hanging clips as required for the mounting arrangement indicated.
   a. Fan mounting legs shall be fabricated from steel plate suitably braced to ensure stability and rigidity.
   b. Clips for horizontal suspension shall be minimum 3/8 in. steel plate welded and mounted at fan centerline.

c. Clips for vertical suspension shall be minimum 3/8 in. steel plate welded and mounted at center of moment of inertia of fan assembly.

4. Fans shall be provided with supports for horizontal or vertical mounting, as required. When required, inlet bell, inlet screen, acoustical diffuser and outlet cone shall be provided by the manufacturer.
5. The impeller shall be secured to the motor shaft by a key and keyway. Axial location shall be provided by a collar or shoulder on the drive shaft with a retaining washer and screw fitted into a tapped hole in the end of the shaft. The screw shall be locked in position.
6. External grease fittings with extended grease leads shall be provided for motor lubrication. Motor shall be removable from either end of the fan. Foot mount or "C" face flange mount motors are acceptable.

D. Vane-Axial Fans

1. Adjustable pitch vane-axial fans shall be direct or belt driven, as indicated, axial flow type, with fan blade angle capable of manual adjustment while fan is stopped.
2. Fans shall be Arrangement No.9 for belt drive or Arrangement No.4 for direct drive. The fan rotor shall be mounted directly on the motor shaft with the assembly enclosed entirely within the fan casing, suitable for inline duct mounting.
3. Fan casing, flanges and supports shall be of suitable thickness and bracing required for stable and rigid construction, with no deflection, and to prevent vibration and pulsation.
   a. Fans 38 in. diameter or less shall be min 12 gauge construction.
   b. Fans over 38 in. diameter shall be min 10 gauge construction.
4. Fan casings shall be fitted with mounting legs or hanging clips as required for the mounting arrangement indicated.
   a. Fan mounting legs shall be fabricated from steel plate suitably braced to ensure stability and rigidity.
   b. Clips for horizontal suspension shall be minimum 3/8 in. steel plate welded and mounted at fan centerline.
   c. Clips for vertical suspension shall be minimum 3/8 in. steel plate welded and mounted at center of moment of inertia of fan assembly.
5. Fans shall be provided with supports for horizontal or vertical mounting, as required. Inlet bell, inlet screen, acoustical diffuser and outlet cone shall be provided by the manufacturer.
6. Fan shall have inlet and outlet static regain cone.
7. Provide discharge cone silences, as scheduled, optimized to fan discharge geometry with minimum dynamic insertion loss of 15/18 dB at 250/500 Hz at 2000 fpm duct velocity.
8. Fan blades and hubs shall have aluminum castings, alloy 356 T6 aluminum alloy. Fan blades shall be designed for maximum efficiency and be airfoil shaped, varying in twist and width from base to tip. Blade tip clearance shall be within tolerance to meet certified performance of fan. Fan hub shall be one-piece aluminum casting. The fan hub shall have the capacity to add or delete impellers in the field for final balance.

9. Fan blade pitch angle shall be individually, manually adjustable using common wrenches. Special tools shall not be required to adjust blade angle.
    a. Fan manufacturer shall install and adjust linkages for controllable and manually adjustable pitch vane axial fans in the field. Field adjustment of the pitch range shall be provided by the fan manufacturer to balance the fan to maximum and minimum conditions. Field adjustment of the adjustable pitch setting shall be provided by the fan manufacturer to balance the fan to the required conditions.
10. The impeller shall be secured to the motor shaft by a key and keyway. Axial location shall be provided by a collar or shoulder on the drive shaft with a retaining washer and screw fitted into a tapped hole in the end of the shaft. The screw shall be locked in position.
11. Provide external grease fittings with extended grease leads for motor lubrication. Motor shall be removable from either end of the fan. Foot mount or "C" face flange mount motors are acceptable.

2.6 PLENUM FANS

A. Provide single width non-overloading centrifugal type, mounted on rigidly built and braced all welded fan pedestals made of structural steel, mounted to square, flat mounting plates, and equipped with lifting lugs.

B. Provide belt driven type unless noted otherwise.

C. Wheels shall be 12 bladed air foil shaped to reduce sound and increase efficiency.

D. Wheel shall be carefully matched to inlet cone to provide precise running tolerances and maximum operating performance and efficiency.

E. Provide the fan wheel with a completely enclosing protective cage with a removable section large enough to service the fan or drive easily. Cages across the fan plenum access door are not acceptable.

F. Provide lubrication lines with Zerk fittings, extended to the exterior of the protective fan cage, securely mounted to prevent stress.

G. Provide removable fan inlet screen.

2.7 HIGH-PLUME INDUCTION TYPE LAB FANS

PAY CAREFUL ATTENTION TO HOW FANS WILL BE SUPPORTED ON ROOF. IF FANS OR PLENUM ARE TO BE SUPPORTED ON STRUCTURE, ENSURE THAT A MINIMUM 3 -FT. CLEARANCE IS MAINTAINED BELOW PLENUM TO ALLOW ROOF MAINTENANCE.

A. Provide exhaust fans with induction windbands that discharge air at no less than 3000 FPM at the design air volume.

B. Fans shall meet the scheduled performance requirements, including system effects from provided plenums. Manufacturer shall be responsible to account for system effects created by backdraft dampers, plenum size/aspect ratio, and connection sizes and locations at the specified connection air volumes.

ENGINEER MUST SPECIFY THE INDUCTION PERFORMANCE (AMOUNT OF INDUCED AIR VERSUS PRIMARY AIR). EDIT PART C BELOW CAREFULLY. 270 PERCENT IS ABOUT THE MAXIMUM INDUCTION PERCENTAGE CATALOGUED, AND MAY NOT BE POSSIBLE DEPENDING ON THE FAN SELECTION.

C. Discharge shall include FRP nozzles with passive central stack that is capable of generating aspiration. The FRP shall be chemically and UV resistant.

D. Steel entrainment windbands shall provide secondary induction of outside air. Induction shall take place downstream of the fan impeller. Windbands shall discharge 270 percent of the design primary airflow rate, or as scheduled. Manufacturer shall certify primary and discharge (induced plus primary) air volumes, and provide these air volumes and a certification statement with the submittal.

CONSIDER IF FACTORY TESTING OF INDUCTION FAN IS APPROPRIATE FOR YOUR PROJECT TO VERIFY INDUCTION PERCENTAGE. IF SO, EDIT THE ARTICLE "SOURCE QUALITY CONTROL," SEVERAL PAGES BELOW. WITH THE ADVENT OF ANSI/AMCA STANDARD 260, FACTORY TESTING OF INDUCTION FANS HAS BECOME LESS NECESSARY.

E. Impellers shall be mounted to the motor shaft to provide a direct drive, Arrangement No.2, or No.4 type fan. Motors shall be isolated from the primary exhaust air stream and shall be visible and accessible from the fan exterior for inspection and service.

F. Mixed flow impellers shall consist of a combination of axial/backward curved blades, and shall be of welded steel construction. The impeller shall have non-stall and non-overloading performance characteristics with stable operation at any point on the fan curve.

G. Stationary discharge guide vane sections shall be provided to increase fan efficiencies.

H. Vibration isolation shall be limited to rubber-in-shear pad type isolators, unless noted otherwise.

I. Fan assemblies shall be designed for a minimum wind loading of 100 mph, and for mounting on a conventional roof curb or plenum as indicated, without the need for guy wire supports.

J. Provide sound attenuators if required to meet specified sound levels. Specified sound power levels shall not be exceeded, including impacts from bypass damper airflow noise. Provide acoustical louvers if required. Sound power levels shall be guaranteed with the attenuator installed on the fan in the specified configuration.

SELECT ONE OF THE FOLLOWING SOUND ATTENUATOR OPTIONS.

K. Provide fan manufacturer’s sound attenuator, installed integral as part of exhaust nozzles for each fan.

1. Maximum attenuator air pressure drop shall be 0.1 inch W.C. Provide performance data of fans de-rated for the pressure loss related to attenuator.
2. Attenuator shall provide attenuation values and fan sound pressure levels as indicated. The published insertion loss values shall be obtained from testing with the attenuator installed in the specified configuration.
3. Silencer shall be constructed of FRP, aluminum, or 316 stainless steel for both inner and outer liners.
4. Acoustical media shall be minimum 3 pcf density fiberglass, isolated from the air stream by a Tedlar film, or the attenuator design shall be packless type.
5. Silencer interior and exterior shall be coated to match fan, including color.
6. Attenuator shall be self-supporting, equipped with bracing and lifting lugs suitable to support the weight of the attenuator.
7. Flow direction shall be clearly marked on side of attenuator.
8.
9. Provide inline sound attenuator with length as indicated.
10. Maximum air pressure drop shall be 0.1 in. W.C. when installed. Provide performance data of fans de-rated for the pressure loss related to attenuator.
11. Attenuator shall provide attenuation values and fan sound pressure levels as indicated. The published insertion loss values shall be obtained from testing with the attenuator installed in the specified configuration.
12. Construct attenuator casing of FRP with minimum 3/16 in. wall thickness or minimum 14 gauge welded galvanized steel. Silencer interior and exterior shall be coated to match fan, including color. Casing shall be of welded construction.
13. Acoustic media shall be minimum 3 pcf density fiberglass. Media shall be chemically protected from air stream by a Tedlar scrim. Inner surface of media shall be covered with perforated galvanized steel. The leading edge of the perforated metal shall not be exposed to the air stream.
14. Attenuator shall be bolted to fan and discharge stack with flanges and stainless steel hardware. Attenuator shall be self-supporting, equipped with bracing and lifting lugs suitable to support the weight of the attenuator.
15. Flow direction shall be clearly marked on side of attenuator.

L. Fan construction shall be AMCA Spark Class C.

M. Fans shall be modular construction and capable of field assembly on roof.

N. PTFE gaskets shall be provided at all companion flange joints.

O. Fasteners shall be type 316 stainless steel.

P. A bolted access door shall be provided for impeller inspection on each fan.

Q. Fans and accessories shall have internal drain systems to prevent rainwater from entering building duct system.

R. Electric motors shall be TEFC and as specified in Motors section.

S. Provide a NEMA 3R, heavy-duty rated, non-fused disconnect switch mounted and wired to motor. Mount switch adjacent to access door. Disconnect shall include early break contacts for fans driven by variable frequency drives.

ENGINEER MUST SPECIFY THE REQUIRED FAN COATING. EDIT BELOW CAREFULLY, IN CONSULTATION WITH FAN VENDORS, BASED ON CHEMICALS EXHAUSTED.

T. All steel and aluminum surfaces shall be prepared for coating by blasting or chemical etching. Prime coat with zinc rich paint (minimum 70 percent zinc). Topcoat with amine epoxy or polyester coating, non-caulking in sunlight, UV inhibited medium gray color. The minimum DFT of the coating system shall be 6 mils. The coating system shall exceed a 4000-hour ASTM B117 Salt Spray Resistance test.

U. Accessories

1. Inlet mixing plenums shall be provided by the fan manufacturer. Each plenum shall be sized to support weight and performance requirements for all fans indicated. Plenums shall be capable of supporting fans without need for guy wires or supports.
   a. Plenums shall be double wall construction with structural stiffeners or shall be continuously welded, heavy gauge single wall construction.
   b. Plenums shall include hinged access doors with heavy duty latches and screens over primary air inlets.
   c. Plenums shall be coated to match fans.
   d. Unless noted otherwise, plenums shall be suitable for mounting on roof curbs.
2. Dampers:
   a. Airfoil type, opposed blade, stainless steel construction.
   b. Stainless steel damper linkage, rods, bearings, and jamb seals.
   c. Polymer blade edge seals. Select blade edge seal material to match the chemical resistance of the fan's coating system.
   d. Damper frames shall be minimum 13 gauge stainless steel.
   e. Damper linkage shall be exposed blade-mounted type. Linkages concealed in the damper frame are not allowed.
   f. Damper drive linkage shall be set by the manufacturer and welded or bolted through the shaft to eliminate slippage; set screws shall not be used.
   g. Leakage shall not exceed 6.0 CFM/sq. ft. at 3 in. WC.
   h. Damper and actuator shall operate smoothly and without deformation affecting specified performance, at a differential pressure no less than the maximum deadhead (zero flow) pressure the fan is capable of producing.
   i. Dampers shall be accessible for maintenance. Damper actuators shall be accessible for maintenance from outside the contaminated interior parts of the plenum.
3. Bypass dampers shall be provided with all plenums for mixing outside air with primary exhaust. Provide:

CHOOSE ONE OF THE BELOW FOR EACH FAN, AND EDIT CAREFULLY.

a. Louver/damper combinations, manual locking quadrant. Provide rain hood w/ birdscreen.
b. Dampers with extended shaft for connection to an actuator. Provide rain hood with birdscreen for each damper.

4. Provide isolation (backdraft) dampers at the inlet to each fan.
5. Provide damper actuators, capable of properly throttling and tightly closing the dampers.

CHOOSE PNEUMATIC OR ELECTRIC ACTUATORS. EDIT BELOW CAREFULLY. PNEUMATIC ACTUATORS ARE PREFERRED. IF ELECTRIC, SELECT APPROPRIATE VOLTAGE.

a. Damper actuators shall be, spring return and shall be 20 psi pneumatic/24V/110V electric.
b. Isolation damper actuators shall be factory wired (via transformer when required) to the fan disconnect switch to open when the fan is energized, close via a spring when the fan is de-energized, and open on a loss of normal power.
c. If the fan is shipped separately from the plenum, all wiring and conduit shall be factory supplied for easy connection in field.

6. Provide extended clear plastic, UV resistant motor lube lines. Extend lines to a mounting bracket located on the fan roof base with Zerk fittings for each line.
7. Provide a structural mounting pedestal for a portable jib crane as part of each fan roof base, in sufficient quantities to reach all fans.
8. Vortex breakers shall be provided on all side inlet and multiple fan plenums.

PARAGRAPH BELOW IS FOR PERCHLORIC ACID FANS ONLY. DELETE IF N/A FOR YOUR PROJECT. NOTE: ADDITIONAL SPECIFICATION MAY BE REQUIRED FOR FANS ON PERCHLORIC SYSTEMS. DO NOT RELY ON THIS PARAGRAPH ALONE.

9. Inlet spray nozzle(s) shall be mounted at fan inlet to provide complete wash-down capability of fan while in operation. Spray nozzle(s) shall be suitable for water or steam output. Nozzle(s) shall be piped to exterior of fan with threaded end for field connection. Nozzle(s) and all associated piping shall be stainless steel construction.

2.8 SMOKE PURGE FANS

ENGINEER SHOULD CALCULATE ACTUAL TEMPERATURE AND MODIFY THIS SECTION ACCORDINGLY. SEE MICHIGAN MECHANICAL CODE.

A. Fans for smoke purge/exhaust applications shall be rated at 500 Deg F for (4) hours continuous operation and 1,000 Deg F for 15 minutes. Fans shall be UL 705 listed (electrical components). If belt driven, fans shall have 2 belts or a minimum of 1.5 times the required number of belts, whichever is greater. Butterfly damper mechanisms shall be UL 793 listed. Motors shall have a minimum service factor of 1.15.

2.9 KITCHEN EXHAUST FANS

A. Fans shall UL 705 listed (electrical components) and UL 762 listed for electrical components and grease removal.

B. Construct spun aluminum housing of heavy gauge aluminum with a rigid internal support structure.

C. Fan wheel shall be backward inclined.

D. Construct drive frame assembly of heavy gauge steel.

E. Mount motors and drives on vibration isolators, out of the air stream.

F. Fresh air for motor cooling shall be drawn into the motor through a tube free of contaminants or through a space between the fan shroud and the motor cover.

G. Mount fan shafts in permanently sealed, lubricated pillow block ball bearings. Bearings shall be sized for a minimum L-10 life in excess of 200,000 hours at maximum fan class operating conditions including belt pull.

H. Size fan drives for 1.65 times the motor horsepower. Pulleys shall be cast type, keyed and securely attached to the wheel and motor shafts.

I. Motor pulleys shall be adjustable for final balancing.

J. Provide a factory-installed disconnect switch, wired from the fan motor to a junction box installed within the motor compartment. Provide a conduit chase through the base to the motor compartment.

K. Roof-mounted upblast exhaust fans shall have a leak proof housing constructed with a one-piece windband with an integral rolled bead and shall be joined to the curb-cap with a continuously welded seam.

L. Sidewall mounted exhaust fans shall have a leak proof housing constructed with a one-piece windband with an integral rolled bead. Provide a mounting plate that will be attached and sealed to the wall prior to installing fan.

M. Provide a drain connection constructed of aluminum to allow for single point drainage of grease, water and other residue. Grease trap shall include the drain connection and shall be constructed of aluminum. Unit shall collect grease and water from fan and extract grease from water for ease of disposal.

N. When dampers are installed below fan, provide a heavy gauge hinge kit to allow entire fan to tilt away from roof curb for access to dampers. Construct hinge kit with aluminum hinges and hold open cables for field installation.

O. Provide aluminum wheel coated with a non-stick coating.

P. Clean out port shall have a hole on the outside of windband and a grease repellent compression rubber fitting, allowing access to entire wheel for cleaning.

Q. If motor is installed in airstream, extend ball bearing leads through an airtight conduit to a suitably sized conduit box in accordance with NFPA and NEC, mounted on the exterior of the fan casing. External grease fittings with extended grease leads shall be provided for motor lubrication. Motor shall be removable from either end of the fan. Foot mount or "C" face flange mount motors are acceptable.

2.10 SOURCE QUALITY CONTROL

A. Run test all fans 1 HP and larger at the factory before shipment. Testing shall be conducted at the maximum fan class speed.

B. Statically and dynamically balance each fan per AMCA procedures. Perform electronic vibration analysis at the maximum fan class speed for all fans over 5 HP.

C. Unless noted otherwise, the installed maximum allowable RMS velocity at maximum fan class speed measured at each bearing shall not exceed 0.09 inches/sec in vertical, horizontal, and axial directions.

D. Fans may be field tested after installation by an independent third party. Any fan found to exceed specified vibration limits shall be corrected to perform within those limits without cost to the Owner.

CONSIDER IF FACTORY TESTING IS APPROPRIATE FOR HIGH-PLUME INDUCTION-TYPE LAB FANS WHEN USED ON THE PROJECT. DELETE BELOW IF THERE IS TO BE NO FACTORY TESTING.

E. High-plume Induction-Type Lab Fans: One fan of each size shall be factory tested and certified to have achieved the specified primary and secondary induction air volumes. Provide certified reports. Owner’s representative shall be permitted to witness factory testing.

PART 3 - INSTALLATION

3.1 FAN INSTALLATION

A. Coordinate the fan arrangement with project conditions prior to ordering the fan.

B. Receive and inspect fans for defects. All defective or damaged fans shall be replaced at no cost to the Owner.

C. Openings shall remain protected during storage. Immediately after installation and assembly, all factory protection shall be restored. Unit shall remain protected until just prior to final acceptance by Owner.

D. Use spreader bars on lifting cables when hoisting fans from lifting lugs to prevent cable damage to housing or components. Rig fans per fan manufacturer's recommendations.

E. Fans shall be installed as shown on drawings, in accordance with details, approved submittals and the fan Manufacturer's installation requirements and recommendations. Ensure fans are installed to allow easy accessibility for service or removal of fan components.

F. Provide and install supplemental steel, supports, isolators and hangers necessary to hang or mount fans. Coordinate final location and placement of intermediate steel and ductwork connections in field. Install suspended fans with supports attached to structural members.

G. Install any associated motors, drives, or other components that have been shipped loose. Fan shall be installed, made fully operation, and tested.

H. Install flexible inlet and discharge couplings to prevent vibration transmission to ductwork.

I. Inlet and discharge ductwork shall have a minimum straight run of two (2) fan diameters upstream and downstream of the fan.

J. Just prior to final acceptance fan shall be thoroughly cleaned of all grease, dirt, and dust, etc. Apply touch-up paint or touch-up coating after final cleaning to repair any damage to the finish.

K. Provide or coordinate the scope of work associated with the installation of fans as specified in the following sections:

1. Roof curbs
2. Concrete Housekeeping Pads
3. Vibration isolation
4. Sheet Metal accessories
5. Interconnection wiring and conduit from power source to fan connection (starter).

L. Perform the following tests and inspections prior to fan operation:

1. Verify that shipping, blocking, and bracing are removed.
2. Verify that unit is secure on mountings and supporting devices, and that connections to ducts and electrical components are complete.
3. Verify that proper thermal-overload protection is installed in motors, starters, and disconnect switches.
4. Verify that cleaning and adjusting are complete.
5. Inspect fan scroll for debris or water.
6. Remove guards. Align and adjust belt tension, verify that fan wheel and motor rotate freely, and that bearing operation is smooth. Re-install belt guards.
7. Adjust damper linkages for proper damper operation.
8. Verify lubrication of bearings and other moving parts. Use proper bearing venting procedures, in particular at motor bearings. Use only grease type specifically recommended by fan mfr. Do not over-grease. Fill extended grease lines if not already filled, using mfr. recommended grease and proper venting procedures.
9. Verify that manual and automatic volume control and fire and smoke dampers in connected ductwork systems are in fully open position.
10. Verify proper motor and fan rotation.

11. Remove and replace malfunctioning units and retest as specified above.

M. Temporary Use of Fans

1. Contractor shall thoroughly clean unit of all grease, dirt, and dust, etc. and perform manufacturer's pre-start protocol and commissioning activities just prior to being placed into temporary service.
2. During temporary service, perform all of manufacturer's required routine maintenance procedures. Continuously maintain a log of all such procedures. Store log at unit during temporary use period and include log as part of the final O&M manual.
3. Contractor shall thoroughly clean unit of all grease, dirt, and dust, etc., lubricate bearings, align and tighten belts and perform manufacturer's pre-start protocol and commissioning activities after unit has completed temporary service, and install a new, complete set of filters just prior to final acceptance by Owner.

3.2 FIELD QUALITY CONTROL

A. Each fan shall be field tested. Any deficiencies related to performance, manufacture or installation shall be corrected without cost to Owner.

3.3 COMMISSIONING

A. Perform the commissioning activities as outlined in the Division 01 Section Commissioning and other requirements of the Contract Documents.

END OF SECTION 233400

UNIVERSITY OF MICHIGAN
ARCHITECTURE, ENGINEERING AND CONSTRUCTION

ARCHITECTURE & ENGINEERING
326 East Hoover, Mail Stop B
Ann Arbor, MI 48109-1002
Phone: 734-764-3414
Fax: 734-936-3334

BuildingName
The Description of the Project
P00000000 0000

SPECIFICATION DIVISION 23

NUMBER SECTION DESCRIPTION

DIVISION 23 HEATING, VENTILATING AND AIR CONDITIONING (HVAC)
SECTION 233600 - AIR TERMINAL UNITS

END OF CONTENTS TABLE

DIVISION 23 HEATING, VENTILATING AND AIR CONDITIONING (HVAC)
SECTION 233600 - AIR TERMINAL UNITS

REVISIONS:

6/16: ADDED CONSTANT AIRFLOW VENTURI VALVES (CVV) FOR LABORATORY FLOW APPLICATIONS. CVV VALVES ARE TO BE PROVIDED BY THE SHEET METAL TRADE TO SUPPORT CONSTANT FLOW APPLICATIONS, INCLUDING FUME HOODS, COVERED BY SPECIFICATION 230900.

6/21/13: MINOR REVISION TO CLARIFY QUALITY ASSURANCE STANDARDS AND TO SPECIFY THAT LINER EROSION RESISTANCE IS TO BE RATED AT 6000 FPM.

NOTE THAT THIS SECTION DOES NOT INCLUDE FAN-POWERED TAU'S.

PART 1 - GENERAL

1.1 RELATED DOCUMENTS

INCLUDE PARAGRAPH 1.1.A AND B IN EVERY SPECIFICATION SECTION. EDIT RELATED SECTIONS 1.1.B TO MAKE IT PROJECT SPECIFIC.

A. Drawings and general provisions of the Contract, Standard General and Supplementary General Conditions, Division 1 Specification Sections, and other applicable Specification Sections including the Related Sections listed below, apply to this Section.

CAREFULLY EDIT AND COORDINATE RELATED SECTIONS.

RETAIN THE DIVISION 16 ELECTRICAL REFERENCE IN THIS SECTION TO ASSURE THAT ELECTRICAL WORK STANDARDS ARE OBSERVED AND ENFORCED

B. Related Sections:

1. Section 230900: Mechanical Systems Controls
2. Division 26: Electrical.

1.2 SUMMARY

A. Section Includes:

1. Terminal airflow units (TAUs) of the various types, arrangements and sizes as specified in this Section and scheduled on Drawings.
2. Constant (CAV) and Variable Volume (VAV) Terminal Airflow Units.
3. Dual Duct Terminal Airflow Units.
4. Retrofit Terminal Airflow Units.
5. Terminal Airflow Unit-Mounted Sound Attenuators.
6. Terminal Airflow Unit Pneumatic Controller and Actuator.
7. Terminal Airflow Unit-Mounted Reheat Coils.
8. Airflow-sensing array(s) and dampers on TAUs to be equipped with DDC controls.

9. Pneumatic damper operator(s) and airflow-sensing array(s) on pneumatic VAV, CAV, and Dual Duct terminal box.
10. Constant Volume Venturi (CVV) Terminal Airflow Units

1.3 ADMINISTRATIVE REQUIREMENTS

A. Mechanical Systems Controls Contractor shall coordinate with the terminal airflow unit manufacturer to provide a complete operating system.

1.4 SUBMITTALS

A. Product Data: Provide performance data, rated capacities, furnished specialties, sound-power ratings, weights, operation and maintenance, and accessories for the following.

1. Terminal airflow units.
2. Liners and adhesives.
3. Sealants and gaskets.
4. Sound attenuators.
5. Pneumatic controllers.
6. Airflow sensing array, damper, pneumatic damper operator.
7. Damper and casing leakage data.
8. Hangers and supports, including methods for duct and building attachment and vibration isolation.
9. Constant Volume Venturi (CVV) Terminal Airflow Units

B. Documentation indicating that units comply with ASHRAE 62.1, Section 5 - "Systems and Equipment.

1.5 QUALITY ASSURANCE

RETAIN PARAGRAPHS A AND B IN EVERY PROJECT SPECIFICATION.

A. Manufacturers and Products: The products and manufacturers specified in this Section establish the standard of quality for the Work. Subject to compliance with all requirements, provide specified products from the manufacturers named in Part 2.

EDIT THE REFERENCE STANDARDS FOR PROJECT REQUIREMENTS.

B. Reference Standards: Products in this section shall be built, tested, and installed in compliance with the following quality assurance standards; latest editions, unless noted otherwise.

1. AHRI 880: "Performance Rating of Air Terminals." Test in an AHRI certified laboratory. Units shall be AHRI 880 sealed.
2. Electrical Components, Devices, and Accessories: Listed and labeled as defined in NFPA 70, by a qualified testing agency, and marked for intended location and application.
3. Insulation/liner:
   a. UL 723, "UL Standard for Safety Test for Surface Burning Characteristics of Building Materials."
   b. UL 181 "UL Standard for Safety Factory-Made Air Ducts and Connectors." Limited to mold growth and humidity test and erosion test.

c. ASTM C1071 - 05e1 "Standard Specification for Fibrous Glass Duct Lining Insulation (Thermal and Sound Absorbing Material)."
d. ASTM E84-10 "Standard Test Method for Surface Burning Characteristics of Building Materials."
e. NFPA 90a: "Standard for the Installation of Air-Conditioning and Ventilating Systems."
f. NFPA 90b: "Standard for the Installation of Warm Air Heating and Air-Conditioning Systems."

4. Coils: AHRI Standard 410 "Forced-Circulation Air-Cooling and Air-Heating Coils."
5. SMACNA "HVAC Duct Construction Standards - Metal and Flexible," Chapter 5, "Hangers and Supports."
6. ASHRAE 62.1, Section 5 - "Systems and Equipment" and Section 7 - "Construction and System Start-Up."

1.6 DELIVERY, STORAGE, AND HANDLING

A. Mark each terminal unit before shipment to the job site with a unique identifier corresponding to its location and function in the building. Identifier nomenclature shall correspond to the Terminal Airflow Unit Detail.

REVIEW WARRANTY TERM PER PROJECT. LONGER WARRANTY PERIOD MAY BE APPROPRIATE FOR CERTAIN TYPES OF WORK. RETAIN THIS ARTICLE IN EVERY PROJECT SPECIFICATION.

1.7 WARRANTY

A. Provide a complete parts and labor warranty for a minimum of one year from the date of Substantial Completion.

PART 2 - PRODUCTS

2.1 MANUFACTURERS

A. Acceptable Terminal Airflow Unit Manufacturers:

1. Titus.
2. Krueger.
3. Metalaire.
4. Nailor Industries, Inc.
5. Price Industries.
6. Tuttle and Bailey.

COORDINATE THE FOLLOWING REQUIREMENT WITH DRAWINGS.

B. Acceptable CVV Terminal Airflow Unit Manufacturers:

1. Phoenix
2. Siemens

C. Acceptable Pneumatic Controller Manufacturer:

1. KMC Controls, Inc.

2.2 ACOUSTIC PERFORMANCE

A. Provide acoustic performance, including performance supplemented by sound attenuators, as scheduled on Drawings. Acoustical performance shall be met at all damper positions with 1 inch static pressure at the TAU inlet.

2.3 FIRE AND SMOKE TEST PERFORMANCE

A. Insulation: Maximum flame-spread index of 25 and a maximum smoke-developed index of 50, for insulation and adhesive, when tested according to ASTM E 84.

2.4 SINGLE AND DUAL DUCT TERMINAL AIRFLOW UNIT (TAU) (CAV AND VAV)

A. Provide single duct, variable or constant volume terminal units as scheduled and detailed. Pneumatic controllers shall have the minimum and maximum airflow rates preset at factory with capability of field adjustment.

B. Provide dual duct, variable or constant volume terminal units as scheduled and detailed. Pneumatic controllers shall have the minimum and maximum airflow rates preset at factory with capability of field adjustment.

1. Construct unit casings of 22 gauge, minimum, galvanized steel sheet.

C. Damper Assembly: Minimum 20 gauge construction with a mechanical stop to prevent overstroking.

D. Terminal unit: Mechanically assemble and seal to provide an airtight casing. Casing air leakage shall not exceed 10 cfm at 1 inch w.c. differential pressure.

WHERE ACOUSTICAL PERFORMANCE IS PARTICULARLY IMPORTANT, SPECIFY THE LINER'S ACOUSTICAL PERFORMANCE.

E. Line interior walls of the terminal casing with 1/2 inch minimum, 4 lbs./cu.ft. dual density fiberglass acoustical/thermal insulation with a non-porous, aluminum foil reinforced face sheet covering of the acoustical/thermal liner. Rate liner covering for a maximum air velocity of 6,000 fpm. Wrap and seal exposed foil lining edges from the airstream, and tucked and secured with metal barriers.

F. Provide a position indicator on the damper shaft marked on the end to verify damper position.

G. Screw damper blade through the shaft to prevent slippage and include a closed cell foam gasket to ensure minimum leakage.

H. Damper air leakage shall not exceed 5 cfm at 3.0 inches w.c. differential pressure.

I. Provide damper pivot with a Celcon or Delrin bearing.

J. Equip the terminal unit with a multi-axis flow sensor with amplifying pressure pick-up points connected to a center averaging chamber. The chamber shall be designed to provide a differential pressure signal at least 1.5 times the normal unit velocity pressure over the full capacity range of the unit. Pressure sensing pick-ups shall be extended to the outside of the casing and have capped TEEs to permit parallel pressure measurements. A flow curve for field balancing shall be affixed to the terminal unit casing on the controller side. Minimum accuracy shall be 90 percent, regardless of inlet conditions.

K. Provide pneumatic tubing in accordance with the requirements of the Temperature Controls Section.

2.5 CONSTANT VOLUME VENTURI (CVV) TERMINAL AIRFLOW UNITS

A. The terminal airflow unit shall be of venturi control type utilizing a cone shaped element.

B. Flow shall be pressure independent at the scheduled air flow over a pressure range of 0.3" WG to 3.0" WG static pressure drop across the valve. Valve shall respond within 1 second of a change in duct static pressure under all conditions.

C. Accomplish pressure independence by the cone/spring element continuously adjusting position relative to the venturi orifice to compensate for duct pressure fluctuations.

D. Provide CVV TAUs of the diameter and volumetric range indicated on the drawings. Provide larger, smaller, fewer, or additional valves versus that indicated when necessary to match the volumetric range specified on the drawings (this may be necessary when providing valves from a manufacturer other than the design basis).

E. Total CVV TAU error (including the combined effects of nonlinearity, hysteresis, repeatability, temperature and drift over a one year period) shall not exceed +/- 5% of flow set point. This error shall not be exceeded regardless of duct inlet or exit configurations, over the entire manufacturer’s cataloged volumetric operating range of the LTAU, and at any pressure drop across the LTAU from 0.3" WG to 3.0" WG static pressure.

F. Provide sound attenuators only when specifically indicated. Attenuator shall be properly matched to each individual CVV TAU to meet the sound performance scheduled. Provide stainless steel packless type attenuators for all fume hood and "wet" exhaust applications. Attenuator pressure drop shall not exceed 0.20 in. w.c. at the CCV TAUs maximum rated flow, unless indicated otherwise on drawings.

G. Valves shall be constructed of minimum 16 gauge aluminum. Shaft and shaft support brackets shall be 316 stainless steel. Pivot arm and internal linkage shall be aluminum or stainless steel. Springs shall be spring-grade stainless steel. Shaft bearing surfaces shall be made of Teflon, polyester, or polyphenylene sulfide composite.

H. Low Leakage Valves

1. Provide where indicated.

2. Provide low leak seal materials compatible with the severity of service indicated by the particular valve coating that has been specified.

I. Valves connected to fume hood exhaust or where indicated on drawings:

1. Coat LTAU with minimum 5.0 mil dry film thickness Heresite P403 coating material, applied and baked per coating manufacturer's recommendations.
2. Shaft, pivot arm and linkage, and other internal metal parts (nuts, bolts, rivets, etc.) shall be stainless steel.
3. Shaft shall be Teflon coated.
4. Shaft bearing surfaces shall be made of Teflon or polyphenylene sulfide composite.

J. Provide required valve accessories to support the controls contractor.

1. Phoenix fume hood CVV TAU require corrosion proof 316L stainless steel pressure taps for monitor installation.
2. Siemens fume hood CVV TAU require corrosion proof 316L stainless steel restricting orifices for monitor installation.

2.6 DUAL DUCT TERMINAL AIRFLOW UNITS

A. Units shall be constructed the same as the single duct units, but shall have separate damper assemblies for each airstream and shall include an integral sound attenuator/mixer section.

2.7 RETROFIT (SLIDE-IN) TERMINAL AIRFLOW UNITS)

A. Design the retrofit unit to slide into the side of existing ductwork, with a maximum length of duct opening of 10 inches. Gaskets shall be attached to the orifice plate and mounting plate to provide a tight seal against the inner duct walls. Formed flanges shall provide added duct stiffness at the insertion point and for fastening the terminal to the ductwork with sheet metal screws.

B. Unit casings shall be constructed of a minimum 22 gauge galvanized steel and shall be configured to mount on either the right or left side of the duct.

C. Damper assembly construction: Minimum 14 gauge.

D. Damper shall have blade seals and flexible metal compressible jamb seals. Damper leakage shall not exceed 5 cfm at 3.0 inches w.c. differential pressure

E. Provide damper shaft position indicator marked on the end to verify damper position.

F. Provide Celcon or Delrin Damper bearing pivot.

G. Equip terminal unit with a multi-axis flow sensor with amplifying pressure pick-up points connected to a center averaging chamber. Design the chamber to provide a differential pressure signal at least 1.5 times the normal unit velocity pressure over the full capacity range of the unit. Pressure sensing pick-ups shall be extended to the outside of the casing and have capped TEE's to permit parallel pressure measurements. A flow curve for field balancing shall be affixed to the terminal unit casing on the controller side. Minimum accuracy shall be 90 percent regardless of inlet conditions.

2.8 TERMINAL AIRFLOW UNIT-MOUNTED SOUND ATTENUATORS

A. Provide factory fabricated, integral-type sound attenuators with aluminum foil faced liners. Wrap, tuck and secure exposed foil lining edges with metal brackets. Attenuators shall be one-piece construction using the same materials as the attached terminal airflow unit.

B. For supply units, install attenuator at the discharge of supply air terminal units, between the terminal air flow unit damper and any air diffusion devices.

C. For exhaust/return units, install attenuator upstream of terminal airflow unit damper, but downstream of any exhaust/return connections.

D. Sound attenuator performance shall be as scheduled.

2.9 TERMINAL AIRFLOW UNIT CONTROLLER AND ACTUATOR

A. Pneumatic Controls: Provide controller, damper, damper actuator, linkage, flow sensor and interconnecting pneumatic tubing. Controller operation over an 8-13 psig control signal. Factory-set controller for direct acting control. Mount damper actuator to damper shaft in a normally open damper configuration. Damper actuator linkage shall allow easy conversion to a normally closed damper configuration without removing the actuator. Factory pipe flow sensor and damper actuator to the controller.

1. Provide KMC Controls CSC-3011 pressure independent controller.

THE SECTION BELOW IS WRITTEN ASSUMING STANDARD U-M PRACTICE WHERE, FOR DDC CONTROLS, U-M FURNISHES THE TERMINAL UNIT "TERMINAL EQUIPMENT CONTROLLER" (DDC CONTROLLER) TO THE MECHANICAL SYSTEMS CONTROLS CONTRACTOR; THE MSCC IS RESPONSIBLE FOR GETTING IT INSTALLED ON THE TERMINAL UNIT. SEE U-M MASTER SPEC 230900 FOR MORE INFORMATION. REVISE TO MAKE PROJECT SPECIFIC ONLY IF NECESSARY.

B. DDC Controls: Provide damper and flow sensor.

2.10 TERMINAL AIRFLOW UNIT-MOUNTED REHEAT COILS

A. Provide coils by the terminal airflow unit manufacturer as a complete factory-mounted assembly, with capacities and characteristics as scheduled on the Drawings. Provide slip and drive or flanged connections to allow removal and reversal of coils in field.

B. Coils: Maximum of 10 fins per inch, same side supply and return (steam/condensate) piping connections, enclosed in a sheet metal casing to match the size of the attached terminal airflow unit.

C. Water Coil: 2-rows, rated for 200 psi working pressure, 250 deg. F, with 3/8 inch copper tubing, minimum wall thickness of 0.016 inch, and mechanically bonded aluminum fins, 1/2 inch or larger solder connectors, and manual air vent on return. Hydrostatically test coils at 250 psi, or at 250 psi air pressure under water. Maximum pressure drop at design flow shall not exceed 10 feet or as scheduled. Hot water shall be equally distributed through all tubes by means of orifices or a header design.

IF FREEZING CONDITIONS EXIST, SPECIFY DISTRIBUTING TYPE STEAM COILS (TUBE - IN - TUBE). NON-DISTRIBUTING TYPE IS TYPICALLY AVAILABLE WITH OPPOSITE END CONNECTIONS. DISTRIBUTING TYPE ARE TYPICALLY AVAILABLE WITH OPPOSITE OR SAME END CONNECTIONS.

D. Steam Coil: Specifically designed for modulating control steam service, non-distributing type, rated for 200 psi working pressure, 250 deg. F, with 3/8 inch copper tubing, minimum wall thickness of 0.020 inch, and mechanically bonded aluminum fins, 1/2 inch or larger threaded, opposite end connections. Hydrostatically test coils at 250 psi or at 250 psi air pressure under water.

E. Electric Coil: Provide UL listed coils. Set coil in an attenuator section integral with the terminal unit. Recess the element grid a minimum of 5 inches from the unit discharge. Elements shall be derated nickel chrome, supported by ceramic isolators a maximum of 3-1/2 inches apart, staggered for maximum thermal transfer and element life, and balanced to ensure equal output per stage. House the integral control panel in a NEMA 1 enclosure with hinged access door. Provide an integral door interlock-type disconnect switch which will prevent the access door from being opened while power is on. Coil units shall contain a primary automatic thermal cutout, a secondary manual reset thermal cutout, airflow proof switch, and terminal block.

PART 3 - EXECUTION

3.1 EXAMINATION AND PREPARATION

A. Review and examine conditions affecting work. Proceed with installation only after unsatisfactory conditions have been corrected.

B. Commissioning: Review and perform required commissioning activities in the pre-construction phases.

3.2 HANGER AND SUPPORT INSTALLATION

A. Comply with applicable SMACNA HVAC Duct Construction Standards and Hanger and Support construction standards, and applicable Division 23 Sections.

B. Support TAU's independently from adjacent ductwork. Ensure supports do not interfere with accessibility of other equipment, e.g., access to TAU DDC control enclosure. Do not hang TAUs from piping, other ducts or equipment.

3.3 TERMINAL AIRFLOW UNIT INSTALLATION

A. Install TAUs in accordance with manufacturer recommendations, Contract Drawings, and reviewed submittals.

B. Provide a minimum of 2 duct diameters rigid straight duct upstream of terminal unit with a bell-mouth or shoe-tap to minimize pressure drops.

C. Label unit according to the applicable detail.

D. Position terminal air flow unit, unit-mounted controller, reheat coil, and sound attenuators to comply with clearance requirements and for ease of maintenance.

3.4 CONSTANT VOLUME VENTURI TERMINAL AIRFLOW UNIT INSTALLATION

A. Install CVV TAUs in accordance with manufacturer recommendations, Contract Drawings, and reviewed submittals.

B. Install one straight equivalent duct diameter upstream of the inlet to the CCV TAU. Transitions connecting to the inlet or outlet of the CCV TAU shall not exceed 30 degrees.

C. Label unit according to the applicable detail.

D. Position terminal air flow unit and sound attenuators to comply with clearance requirements and for ease of maintenance.

3.5 REHEAT COIL INSTALLATION

A. Install reheat coils per applicable SMACNA Standards.

3.6 COMMISSIONING

A. Perform the commissioning activities as outlined in the Division 01 Section Commissioning and other requirements of the Contract Documents.

3.7 SYSTEM START-UP

A. After start-up and operation of the HVAC system, sensors and controllers shall be cleaned and "blown-out" before final calibration of airflows and controls.

3.8 ADJUSTING, CLEANING, PROTECTION

A. Protect open end of terminal boxes, flow sensors and controllers throughout the entire construction period, until Commissioning and Substantial Completion.

END OF SECTION 233600

UNIVERSITY OF MICHIGAN
ARCHITECTURE, ENGINEERING AND CONSTRUCTION

ARCHITECTURE & ENGINEERING
326 East Hoover, Mail Stop B
Ann Arbor, MI 48109-1002
Phone: 734-764-3414
Fax: 734-936-3334

BuildingName
The Description of the Project
P00000000 0000

SPECIFICATION DIVISION 23

NUMBER SECTION DESCRIPTION

DIVISION 23 HEATING, VENTILATING AND AIR CONDITIONING (HVAC)
SECTION 234000 - HVAC AIR CLEANING DEVICES

END OF CONTENTS TABLE

DIVISION 23 HEATING, VENTILATING AND AIR CONDITIONING (HVAC)
SECTION 234000 - HVAC AIR CLEANING DEVICES

4-12-07: REVISED D. KARLE: FILTER FRAME FROM SAME MFG., FILTER FRAME TO WITHSTAND DOUBLE DIRTY FILTER DROP

ADDED SUBMITTAL REQUIREMENTS PER MECH TECH TEAM. JULY 29, 08, D. KARLE.

REVISED FORMAT AND CONTENT. ADDED MERV-A REQUIREMENTS. 4/2011. D. KARLE AND M. PLATT.

PART 1 - GENERAL

1.1 RELATED DOCUMENTS

INCLUDE PARAGRAPH 1.1.A AND B IN EVERY SPECIFICATION SECTION. EDIT RELATED SECTIONS 1.1.B TO MAKE IT PROJECT SPECIFIC.

A. Drawings and general provisions of the Contract, Standard General and Supplementary General Conditions, Division 1 Specification Sections, and other applicable Specification Sections including the Related Sections listed below, apply to this Section.

RETAIN THE DIVISION 26 ELECTRICAL REFERENCE IN THIS SECTION TO ASSURE THAT ELECTRICAL WORK STANDARDS ARE OBSERVED AND ENFORCED

B. Related Sections:

1. Section 019100/019110: Commissioning.
2. Division 26: Electrical.

1.2 SUMMARY

A. Section Includes:

1. Filter holding frames.
2. Pleated filters- MERV 8.
3. Bag filters- MERV 11.
4. Bag filters- MERV 14.
5. HEPA filters (air handler applications only).
6. Gas adsorption filters.
7. Ring Panel Filters.
8. Filter housing.
9. Filter gauges.

1.3 SUBMITTALS

A. Submit the following product data for each unit:

1. Dimensions, performance characteristics, class, details of filter rack construction, maintenance access, and information on all accessories.

1.4 QUALITY ASSURANCE

INCLUDE PARAGRAPHS A AND B IN EVERY SPECIFICATION SECTION. EDIT THE REFERENCE STANDARDS FOR PROJECT REQUIREMENTS.

A. Manufacturers and Products: The products and manufacturers specified in this Section establish the standard of quality for the Work. Subject to compliance with all requirements, provide specified products from the manufacturers named in Part 2.

B. Reference Standards:

1. Products in this section shall be built, tested, and installed in compliance with the following quality assurance standards; latest editions, unless noted otherwise.
   a. AHRI 850-Commercial and Industrial Air Filter Equipment.
   b. ASHRAE 52.1-Gravimetric and dust-spot procedures for Testing Air Cleaning Devices Used in General Ventilation for Removing Particulate Matter.
   c. ASHRAE 52.2 (including Appendix J) Method of Testing General Ventilation Air-Cleaning Devices for Removal Efficiency by Particle Size.
   d. MIL-STD-282-Filter Units, Protective Clothing, Gas-Mask Components, and Related Products; Performance-Test Methods; current edition.
   e. UL 586-Test Performance of High Efficiency Particulate, Air Filter Units.
   f. UL 900-Test Performance of Air Filter Units.
   g. NFPA 90A - Standard for the Installation of Air Conditioning and Ventilating Systems.
   h. IES-RP-CC-001 HEPA and ULPA Filters.

1.5 DELIVERY, STORAGE, AND HANDLING

A. All Filters and Accessories

1. Store at least 4 inches above floor on wood pallets or similar devices. Protect from odors, dust, moisture, and other debris while stored on or off the jobsite, and when transporting to the jobsite, by tightly covering with plastic.

B. HEPA Filters

EDIT HEPA FILTER REQUIREMENTS BELOW CAREFULLY, OR DELETE ENTIRELY IF PROJECT DOES NOT INCLUDE HEPA FILTERS.

1. Delivery
   a. Inspect cartons and filters for damage when received at the job site along with an Owner-designated representative.
   b. Reject cartons with damaged corners, punctures, water damage or not stacked with up arrow in proper position. Do not stack cartons higher than 6 ft. (1.8 meters).
   c. Open cartons and inspect filter face for sagging pleats and separators, cracks, pinholes or breaks. Check gaskets for position and full adhesion to the frame. Use a 125-watt flood lamp during inspection.
   d. Do not open filters packed in sealed plastic bags during inspection unless the filter is obviously damaged.
   e. Do not attempt to repair damaged filters at the job.
2. Handling

a. Handle filters and cartons so pleats remain vertical. Arrow on cartons indicates direction of pleats.
b. Handle filters in sealed cartons until installed.
c. Do not handle with chains, slings or hooks.
d. Do not drop or jar the carton of filter.
e. Do not lift filter from carton. Fold carton tops back and invert carton. Withdraw the carton from the filter.
f. Lift unpacked filters only by the outer surface of cell frame.

3. Storage
a. Repack filter after inspection and seal carton.
b. Store cartons with pleats in a vertical position.
c. Do not stack more than 6 feet high (1.8 meters).

1.6 WARRANTY

A. Provide a complete parts and labor warranty for a minimum of one year from the date of Substantial Completion.

PART 2 - PRODUCTS

2.1 MANUFACTURERS

A. Acceptable Manufacturers- Pleated and Bag Filters:

1. Camfil Farr.
2. Purolator.
3. American Air Filter.
4. Flanders Corporation.
5. Eaton Corporation.
6. Tri-Dim Filter Corporation.

B. Acceptable Manufacturers- HEPA Filters:

1. Flanders Corporation.
2. Camfil Farr.
3. Eaton Corporation.

C. Acceptable Manufacturers- Gas Adsorption Filters:

1. Flanders Corporation.
2. American Air Filter.
3. Camfil Farr.
4. Flanders/CSC Corporation.
5. Purolator.

D. Acceptable Manufacturers- Filter Gauges:

1. Dwyer Instruments.
2. Deiterich Standard, Inc.
3. Bacharach, Inc.
4. Moeller Instrument Co., Inc.

THIS SPECIFICATION SECTION DOES NOT INDICATE WHERE VARIOUS FILTER TYPES SHOULD BE USED. THE TYPE OF FILTERS REQUIRED FOR PARTICULAR PROJECT LOCATIONS MUST BE INDICATED ON DRAWINGS (SCHEDULES PREFERRED) OR IN OTHER SPEC. SECTIONS.

2.2 GENERAL

A. Base filters and filter rack design on the use of 24-inch by 24-inch filters whenever possible. The use of 12-inch by 24-inch filters to complete rack configurations is acceptable. If 24-inch by 24-inch and 12-inch by 24-inch modules are not possible, use industry standard filter sizes for basis of design.

B. Provide filters and filter holding frames by the same manufacturer.

2.3 HOLDING FRAMES

A. Provide grid type holding frames, similar to Camfil Farr Type 8 or equivalent, factory fabricated of a minimum of 16 gauge galvanized steel, capable of normal operation at twice the maximum filter drop without deformation and equipped with gaskets and 4 spring type positive sealing fasteners. Fasteners shall be capable of being attached or removed without deforming the gaskets and without the use of tools. Frames shall be capable of supporting filters of different efficiencies and depths by change of fasteners.

1. Unless indicated otherwise, provide grid type (face loading) frame in air handling units.
2. Unless indicated otherwise, provide side slide filter frames for duct applications only, up to a maximum frame size of 24 inches by 24 inches Sizes above 24 inches by 24 inches shall be face loading type frames.

B. Holding frames shall, at minimum, withstand double the scheduled dirty filter pressure drop without deformation or air bypass.

C. Design Frames so that the housing can be stacked on top of the other without deformation.

D. Completely safe off filter frame to eliminate air from bypassing filters.

E. Filters shall be inserted and seal from the upstream side of the frame.

F. Filter frame maximum allowable leakage rate 0.5 percent at 6 inches wc.

ASSURE FILTERS HAVE THE SPECIFIED MERV-A RATING WHEN REVIEWING SUBMITTALS. MERV-A ASSURES ELECTRO-STATICALLY CHARGED FILTERS CAN NOT BE SUPPLIED WHOSE PERFORMANCE DEGRADES TO A LOWER MERV RATING SOON AFTER INSTALLATION.

2.4 FILTERS

A. MERV 8 Pleated Filters (30 percent).

1. Filters: 2-inch, medium efficiency, pleated, disposable type as shown on the drawings. Each filter shall consist of a non-woven fabric media, support grid and enclosing frame. The filter shall be UL listed as Class I or Class II.
2. Filter media: cotton and synthetic blend.
   a. Average dust-spot efficiency of 30 percent to 35 percent and an average arrestance of 90 percent to 92 percent in accordance with ASHRAE 52-1.

b. Minimum MERV 8 per ASHRAE 52.2 and a MERV-A rating of 8 when tested per Appendix J of ASHRAE 52.2.

3. Effective filter media shall be at least 7.0 sq.ft. media per 1.0 sq.ft. filter face area and shall contain at least 11 pleats per linear foot. Initial resistance at 500 fpm face velocity shall not exceed 0.30 inch wg.
4. Media support shall be a welded wire grid or expanded metal with an effective open area of at least 96 percent. Bond the welded wire grid to the filter media to eliminate the possibility of media oscillation and media pull-away. Form the media support grid in a manner that it affects radial pleat design, allowing total use of filter media.
5. Construct the enclosing frame of a rigid, heavy duty, high wet strength beverage board, with diagonal support members bonded to the air entering and exiting side of each pleat to ensure pleat stability. Bond the inside periphery of the enclosing frame to the filter pack, thus, eliminating the possibility of air bypass.

B. MERV 11 Bag Filters (65 percent)

1. Filter: 22 inches deep, high performance, totally disposable, bag type. Filter UL listed as Class I or Class II.
2. Filter media: High-density, microfine glass fibers.
   a. Average dust-spot efficiency of 60 percent to 65 percent and an average arrestance greater than 95 percent per ASHRAE 52-1.
   b. Minimum MERV 11 rating per ASHRAE 52.2 and a MERV-A rating of 11 when tested per Appendix J of ASHRAE 52.2.
3. Filter shall have a minimum of 40 support points per sq.ft.
4. Filter shall have 10 pockets. The initial resistance at 500 fpm face velocity shall not exceed 0.25 inch wg.
5. Form filter pockets by a linear sewing process to maintain the pocket configuration when in use. Seal all stitching points completely with a positive leak-free sealant. Chemically adhere the pockets around the periphery of the galvanized steel retainers. Retainers shall have rolled edges for enhanced pocket support.
6. Filter headers: Constructed of a deep grooved "J" retainer channel of galvanized steel. Closure corner shall be riveted, with mitered joints sealed against air leakage. Filters shall have minimum 7/8 inch headers.

C. MERV 14 Bag Filters (95 percent)

1. Filter: 30-inch-deep, high performance, totally disposable, bag type. The filter shall be UL listed as Class I or Class II.
2. Filter media: High-density, microfine glass fibers.
   a. Average dust spot efficiency of 90 percent to 95 percent and an average arrestance greater than 98 percent per ASHRAE 52-1.
   b. Minimum MERV 14 rating per ASHRAE 52.2 and a MERV-A rating of 14 when tested per Appendix J of ASHRAE 52.2.
3. Filter shall have a minimum of 40 support points per sq.ft.
4. Filter shall have 10 pockets and the initial resistance at 500 fpm face velocity shall not exceed 0.50 inch wg.

5. Form filter pockets by a linear sewing process to maintain the pocket configuration when in use. Completely seal all stitching points with a positive leak-free sealant. Chemically adhere the pockets around the periphery of the galvanized steel retainers. Retainers shall have rolled edges for enhanced pocket support.
6. Construct filter headers of a deep grooved "J" retainer channel of galvanized steel. Closure corner shall be riveted, with mitered joints sealed against air leakage. Filters shall have minimum 7/8 inch headers.

EDIT HEPA FILTER REQUIREMENTS BELOW CAREFULLY, OR DELETE ENTIRELY IF PROJECT DOES NOT INCLUDE HEPA FILTERS. THIS GENERIC HEPA FILTER SPEC MAY NOT BE APPROPRIATE FOR YOUR PROJECT.

2.5 HEPA FILTER (AIR HANDLER APPLICATIONS ONLY)

A. Filters shall have a minimum efficiency of 99.97 percent on 0.3 micron particles when tested with thermally generated DOP in accordance with the latest Industry and Military Standards. The media shall be glass paper. Filters shall be factory constructed and assembled of metal frames, corrugated aluminum separators and 100 percent solid resin sealant.

1. Cell sides: 20 gage galvanized steel with edges sealed and riveted to insure a strong corner joint.
2. Filter Media: 0.015-inch-thick (0.38 mm thick), plus or minus 0.003 inch (0.08 mm), waterproofed, fire retardant, 100 percent glass fiber construction, assembled in closely pleated panel packs, separated by double-thickness ribbons of filter media on both faces of the panel. Install the media packs with the metal cell sides in a multiple V-bank arrangement sealed on all edges with a thermoset bond.
3. Provide gasket on each filter, made of neoprene rubber SCE-41, 5-10 durometer, 1/4 inch (6 mm) by 3/4 inch (19 mm) wide.
4. Filter dimensions: 24 by 24 by 1.5 inches (600 by 600 by 290 mm) (without gaskets).
5. Provide filter having a nominal rating of 2000 cfm (0.94 cu. m/s) with a maximum initial pressure drop of 1.4 inch water gage (349 Pa) or less, tested in accordance with Mil-Std-282 and IES-CS-1T, and having a minimum efficiency MERV 17 per ASHRAE Standard 52.2. Provide each filter with a UL 586 label as an indication of its fire retardancy. Provide to withstand 250 deg. F (121 deg.C) continuous temperature and plus 100 deg. F (38 deg. C) peaks for a maximum of one hour.
6. Mark the cell sides of each filter with indelible ink showing the following information:
   a. Manufacturer's name.
   b. Style Code.
   c. Serial Number.
   d. Efficiency and resistance.

B. Holding frames shall consist of holding frame section, reinforcing flanges, annular-based dimples and mounting holes, receptacle guides, and removable swing bolt assemblies.

1. Construct the holding frame of not less than 14 gauge galvanized steel and shall be of all welded construction, factory fabricated and assembled. All welds shall be ground and smoothly finished to provide a uniform sealing surface.
2. Reinforcing flanges shall be an integral part of the holding frame in order to preclude the possibility of deflection of the sealing flange.
3. Annular-based dimples and mounting holes shall be an integral part of the holding frame to provide ease of installation and mounting, and to preclude the possibility of mounting bolt interference.
4. Four receptacle guides shall be an integral part of the holding frame and shall be mounted on the two vertical sides of the frame. They shall be designed to align the properly filter when placed into the frame and shall function as fulcrum for the swing bolt assemblies.
5. Four swing bolt assemblies shall be provided for each holding frame. Swing bolts shall be constructed of 5/16 inch zinc electroplated steel and be provided with equi-bearing clamps and hex nuts in order to affect adequate and uniform pressure against the periphery of the HEPA filter. Hex nuts shall be capable of being torqued to 30 inch/lbs. each, providing for a 50 percent gasket compression. The swing bolt assembly shall be such that it provides for individual sealing of filters.

C. HEPA Filters shall meet leak free scan test requirements of IES-RP-CC-001 Type A.

EDIT GAS ADSORPTION FILTER REQUIREMENTS BELOW CAREFULLY, OR DELETE ENTIRELY IF PROJECT DOES NOT INCLUDE GAS ADSORPTION FILTERS. THIS GENERIC GAS ADSORPTION FILTER SPEC MAY NOT BE APPROPRIATE FOR YOUR PROJECT.

2.6 GAS ADSORPTION FILTERS

A. Gas adsorption filter manufacturer shall provide gas adsorption filter racks.

B. Gas adsorption filters shall be total-detention type.

C. Construction

1. Construct adsorbers of multiple media-filled panels. Panels shall be 1 inch (25mm) thick moisture-resistant corrugated, kraft honeycomb sealed to top and bottom end plates with non-volatile adhesive.
2. Completely fill Panels with adsorption media held in place by nylon screens.
3. Top and bottom end plates shall be injection-molded high strength ABS plastic with integral headers.
4. Assemble the cell with aerodynamically-designed vertical front struts and vertical steel rod supports on the downstream side.
5. Seal each filter in a polyethylene bag before placing in its shipping carton.

D. Media

1. Media shall be 50 percent activated carbon and 50 percent potassium permanganate coated activated alumina.
2. Activated carbon media shall be virgin coconut shell base, minimum 60 percent CTC activity by the ASTM D-3467 test method, minimum apparent density of 0.49 g/mL, minimum hardness of 97 by the ASTM D-3802 method and a minimum surface area of 1100m^2/g by the N_2 BET method.
3. At 2000 CFM (0.94 m^3/s), the media shall have an airway resistance no greater than 0.50 inch wg (0.12 kPa) and a residence time no less than 0.030 seconds.

2.7 RING PANEL FILTER

A. Construct duct mounted filter racks for animal room exhaust of heat-sealed layers of 2-ply polyester (minimum MERV rating 6, minimum MERV-A rating 6), UL 900 Class 2, over corrosion resistant support frame. Filter shall be overcut. Media shall extend outside frame 1 inch on each side. Initial resistance shall be no more than 0.2 inch wg at 500 fpm.

DELETE FILTER GAUGE SECTION BELOW IF THE CONTROL DRAWINGS SHOW FILTER GAUGES AT ALL FILTER LOCATIONS.

2.8 FILTER GAUGES

A. Provide 1 filter gauge for each filter bank. Select the scale so it allows for 1 inch wc greater than the final filter resistance.

B. Locate static pressure taps in the airstream as recommended by the manufacturer and connect to gauges located on air handling unit casings, or on walls for in-duct filter, as indicated, with 1/4 inch o.d. aluminum or copper tubing.

PART 3 - EXECUTION

3.1 INSTALLATION

A. Install filters, filter frames, filter housings, and filter gauges in accordance with manufacturer's recommendations and approved submittals.

B. Install filters to ensure easy accessibility for service, removal and replacement of filters.

C. Do not operate any system without filters.

D. For any equipment used for temporary ventilation, install a complete set of filters prior to start-up. This set of filters shall be in addition to the final set.

1. While operating for temporary use, install a complete set of filters of the same quality and efficiency as the specified permanent filters for the project.
2. Continuously maintain filters and replace when pressure drop exceeds 1 inch wc, or at manufacturer's recommended change-out pressure drop, whichever is lower.
3. Install a new, complete set of filters just prior to final acceptance by Owner

CONSIDER ADDING REQUIREMENTS FOR SPARE FILTERS HERE, OR IN INDIVIDUAL EQUIPMENT SPEC. SECTIONS. TYPICALLY U-M DOES NOT DESIRE SPARE FILTERS, WITH THE POSSIBLE EXCEPTION OF CERTAIN SPECIALTY FILTERS; IN WHICH CASE CONSULT THE U-M DESIGN MANAGER FOR DIRECTION.

3.2 COMMISSIONING

A. Perform the commissioning activities as outlined in the Division 01 Section Commissioning and other requirements of the Contract Documents.

END OF SECTION 234000

UNIVERSITY OF MICHIGAN
ARCHITECTURE, ENGINEERING AND CONSTRUCTION

ARCHITECTURE & ENGINEERING
326 East Hoover, Mail Stop B
Ann Arbor, MI 48109-1002
Phone: 734-764-3414
Fax: 734-936-3334

BuildingName
The Description of the Project
P00000000 0000

SPECIFICATION DIVISION 23

NUMBER SECTION DESCRIPTION

DIVISION 23 HEATING, VENTILATING AND AIR CONDITIONING (HVAC)
SECTION 235100 - BREECHINGS, CHIMNEYS AND STACKS

END OF CONTENTS TABLE

DIVISION 23 HEATING, VENTILATING AND AIR CONDITIONING (HVAC)
SECTION 235100 - BREECHINGS, CHIMNEYS AND STACKS

REVISIONS:
8-99: REVISED TO VBS.DOT TEMPLATE

PART 1 - GENERAL

1.1 RELATED DOCUMENTS

INCLUDE PARAGRAPH 1.1.A AND B IN EVERY SPECIFICATION SECTION. EDIT RELATED SECTIONS 1.1.B TO MAKE IT PROJECT SPECIFIC.

A. Drawings and general provisions of the Contract, Standard General and Supplementary General Conditions, Division 1 Specification Sections, and other applicable Specification Sections including the Related Sections listed below, apply to this Section.

1.2 SCOPE OF WORK:

A. This section specifies double wall metal vents and accessories for gas fired appliances.

1.3 QUALITY ASSURANCE:

A. Welder's Qualifications: All welders shall be certified in accordance with AWS Standard D9.1, Specifications for Welding Sheet Metal.

B. Codes and Standards:

SPEC EDITOR: INSTALLATION AND REQUIREMENTS FOR SAFETY OF HEAT PRODUCING APPLIANCES AND THEIR VENTING, INCLUDING CHIMNEYS, IS PRESCRIBED BY BUILDING CODES AND INSTALLATION STANDARDS. STATE AND LOCAL LAWS CONTROL THE ADOPTION OF BUILDING CODES. DETERMINE WHICH EDITION OF A NATIONAL CODE IS ADOPTED BY REFERENCE. FAMILIARITY WITH APPLICABLE BUILDING CODES IS ESSENTIAL BECAUSE OF THE GREAT VARIATION IN LOCAL CODES.

1. NFPA: Comply with NFPA 211 "Standard for Chimneys, Fireplaces, Vents and Solid Fuel Burning Appliances".
2. UL: Comply with applicable portions of UL safety standards; provide products which have been UL listed and labeled.
3. SMACNA: Comply with SMACNA Low Pressure Duct Standards for fabricated breeching and smokepipe.
4. AWS: Comply with AWS Structural Welding Code for welders' qualifications, welding details, and workmanship standards.

SPEC EDITOR: ASHRAE EQUIPMENT HANDBOOK, CHAPTER 27, GIVES A COMPLETE LIST OF NATIONAL BUILDING CODES AND NATIONAL STANDARDS WHICH ARE APPLICABLE TO MOST APPLICATIONS.

5. ASHRAE: Comply with the ASHRAE Equipment Handbook, Chapter 27, for Chimney, Gas Vent, and Fireplace Systems, material requirements and design criteria.

1.4 ACCEPTABLE MANUFACTURERS:

1. Selkirk Metalbestos model PS
2. Van Packer Co.
3. AMP Co. model VSI
4. Metal Fab Inc.

1.5 INSURANCE APPROVAL:

A. The entire installation shall be FM approved, Owner's insurance company.

PART 2 - PRODUCTS

2.1 DOUBLE WALL METAL VENTS:

SPEC EDITOR: TYPE "B" VENTS ARE USED FOR VENTING GAS (ONLY) APPLIANCES WITH DRAFT HOODS, AND OTHER APPLIANCES LISTED FOR USE WITH TYPE B VENTS. IT HAS BEEN FOUND THAT A NONCOPPER-BEARING ALUMINUM ALLOY OF 99 PERCENT PURITY OR BETTER PROVIDES SATISFACTORY PERFORMANCE IN PREFABRICATED METAL GAS VENT PRODUCTS.

A. Type B Gas Vents:

1. Description: Double wall gas vents, UL listed for Type B, consisting of an inner pipe of sheet aluminum, and other pipe of galvanized sheet steel.
2. Accessories: UL-labeled tees, elbows, increasers, draft hood connectors, metal cap with bird barrier, adjustable roof flashing, storm collar, support assembly, thimbles, fire stop spacers, and fasteners, fabricated of similar materials and designs as vent pipe straight sections.

SPEC EDITOR: FOR CHIMNEY SERVICE, TEMPERATURES FROM APPLIANCES BURNING OIL OR SOLID FUELS MAY EXCEED THE MELTING POINT OF ALUMINUM; THEREFORE, STEEL IS REQUIRED. STAINLESS STEELS SUCH AS TYPE 430 OR TYPE 304 GIVE GOOD SERVICE IN RESIDENTIAL CONSTRUCTION AND ARE RECOGNIZED IN UL LISTED PREFABRICATED CHIMNEYS. WHERE MORE CORROSIVE ENVIRONMENTS ARE ANTICIPATED, SUCH AS HIGH SULFUR FUEL OR CHLORIDES FROM SOLID FUELS OR REFUSE, TYPE 316 STAINLESS STEEL OFFERS A GOOD COMPROMISE OF CORROSION RESISTANCE AND MECHANICAL PROPERTIES. IN ADDITION, FORCED DRAFT APPLIANCES REQUIRE POSITIVE LISTED VENTS PRODUCTS.

B. All Steel, Positive Pressure, Double Wall Vents

1. Double wall stack: The double wall stack shall have an outer jacket of aluminum coated steel .025" thick in 6 inches through 24" diameters and .034" thick for larger diameters. There shall be a minimum 1" air space between the walls. The inner gas carrying pipe shall be type 304 stainless steel for gas and No. 2 fuel oil, type 316 stainless steel for coal, or No. 4 and No. 6 oil or any other solid fuels. The inner liner shall be .035" nominal thickness for all diameters.

2. Inner pipe joints shall be sealed by use of V Bands and RTV Silicone Sealant for flue gas temperatures up to 600 degrees F; above this temperature joints shall be sealed with V Bands and High Temperature Joint Cement as outlined in the installation instructions and supplied by the manufacturer.
3. Stack extending above roof surfaces must terminate as required by local code, or as required in NFPA 211. All parts exposed to the outer atmosphere should be protected by a minimum of one base coat and one finish coat of paint, such as series 4200-4300 Heat Resistant paint manufactured by Rust-O-Leum Corporation, or equivalent. Paint to be supplied and applied by installing contractor.

PART 3 - EXECUTION

3.1 INSTALLATION OF DOUBLE WALL CONNECTORS, BREECHINGS, AND VENTS:

A. Install Type B gas vents in accordance with manufacturer's installation instructions and UL listing. Maintain minimum clearances from combustibles specified in UL listing.

B. Install all steel, positive pressure, double wall gas vents in accordance with manufacturer's installation instructions and UL listing. Maintain minimum clearances from combustibles specified in UL listing.

C. Seal joints between sections of positive pressure vents in accordance with manufacturer's installation instructions, and using only sealants recommended by manufacturer.

D. Support vents at intervals recommended by the manufacturer to support the weight of the vent and all accessories, without exceeding loading of appliances.

E. Provide a drain section for each boiler in the vertical section of breeching at the boiler to prevent condensed liquids from draining back into the boiler. 1" drain piping is to be run to the nearest floor drain.

3.2 INSTALLATION OF DAMPERS:

A. Install barometric and thermostatically operated dampers in accordance with manufacturer's instructions. Locate as close to draft hood collar as possible.

3.3 ADJUSTING AND CLEANING:

A. Clean breechings internally during installation, to remove dust and debris. Clean external surfaces to remove welding slag and mill film. Grind welds smooth.

3.4 PROTECTION:

A. Temporary Closure: At ends of breechings and chimneys which are not completed or connected to equipment, provide temporary closure which will prevent entrance of dust and debris until installations are completed.

END OF SECTION 235100

UNIVERSITY OF MICHIGAN
ARCHITECTURE, ENGINEERING AND CONSTRUCTION

ARCHITECTURE & ENGINEERING
326 East Hoover, Mail Stop B
Ann Arbor, MI 48109-1002
Phone: 734-764-3414
Fax: 734-936-3334

BuildingName
The Description of the Project
P00000000 0000

SPECIFICATION DIVISION 23

NUMBER SECTION DESCRIPTION

DIVISION 23 HEATING, VENTILATING AND AIR CONDITIONING (HVAC)
SECTION 235240 – FIRE TUBE BOILERS (STEAM)

END OF CONTENTS TABLE

DIVISION 23 HEATING, VENTILATING AND AIR CONDITIONING (HVAC)
SECTION 235240 – FIRE TUBE BOILERS (STEAM)

REVISIONS:
NOV.9,2004: CONSIDERABLE REVISIONS NOT FOR MASTER SPECIFICATIONS
MAR.7,2005: LAST REVISION.

PART 1 - GENERAL

1.1 RELATED DOCUMENTS

INCLUDE PARAGRAPH 1.1.A AND B IN EVERY SPECIFICATION SECTION. EDIT RELATED SECTIONS 1.1.B TO MAKE IT PROJECT SPECIFIC.

A. Drawings and general provisions of the Contract, Standard General and Supplementary General Conditions, Division 1 Specification Sections, and other applicable Specification Sections including the Related Sections listed below, apply to this Section.

1.2 SCOPE OF WORK:

SPEC EDITOR: REVISE NUMBER OF BOILERS FOR THE PROJECT

A. The work includes furnishing and installing three (3) water back fire tube gas fired packaged boilers with capacities as scheduled on the plans.

B. Boiler package shall consist of a boiler, boiler fittings, burner equipment, forced draft fan, safety controls and accessories all piped, wired and assembled on a structural steel base.

C. Each unit shall be a complete package ready for connection of electrical, feed water, steam, blowdown, fuel and venting.

1.3 QUALITY ASSURANCE:

A. Codes and Standards:

1. UL Compliance: The complete boiler burner unit shall be approved and labeled as a unit by Underwriters Laboratories.
2. NFPA Compliance: Install gas-fired fire tube boilers in accordance with NFPA Code 54 "National Fuel Gas Code".
3. ASME Compliance: Construct fire tube boilers, receivers, blow down tank, etc. in accordance with ASME Boiler and Pressure Vessel Code, Section IV "Heating Boilers".
4. UL and NEMA Compliance: Provide fire tube boiler and ancillary electrical components which have been listed and labeled by UL and comply with NEMA standards.
5. FM Compliance: Provide control devices and control sequences in accordance with requirements of Factory Mutual System (FM).

6. NEC compliance: Provide control panels and assembly and wiring of all devices in accordance with requirements of latest edition of NEC. All control panels shall have a label indicating listing by a nationally recognized testing agency such as UL, ETL or MET.
7. Additionally, safeties for burner controls must comply with latest requirements of applicable township and state codes.
8. Gas train, including pilot gas train, must comply with current IRI requirements and township and state codes.

B. Pressure Vessel Warranty:

1. If, within fifteen (15) years from and after the date of acceptance of the boilers, the tube sheets, furnace and furnace throat, rear combustion chamber, or front and rear flue doors fail under normal use and service, the Company will repair the part or compartment as required for proper operation of the boiler. This also specifically includes all refractory at the front and rear of the boiler.

C. Complete package warranty:

1. The complete package shall be warranted for a period of 12 months from the date of acceptance of the installation by the University. Warranty shall include all labor, materials and associated costs.

1.4 ACCEPTABLE MANUFACTURERS:

A. Subject to compliance with the requirements, provide fire tube boilers by one of the following manufacturer(s):

1. Superior Boilers
2. Johnston Boilers
3. Easco Boilers

B. Subject to compliance with other requirements, provide burner manufactured by:

1. Webster Manufacturing Co.

1.5 COMMISSIONING:

A. Comply with commissioning as specified in Division 01. The boiler start up engineer and the installing contractor shall cooperate and coordinate their activities with the commissioning engineer.

SPEC EDITOR: VERIFY WITH UM PROJECT ENGINEER AND EDIT AS REQUIRED.

1.6 INSURANCE COMPANY:

A. The Owner's insurance company is Factory Mutual. The complete boiler and accessory installation shall meet all of the requirements of F.M., whether or not indicated in the plans and specifications, for each device and/or component.

PART 2 - PRODUCTS

2.1 BOILER - GENERAL REQUIREMENTS:

A. Each Steam boiler unit shall be AGA-certified, UL-labeled and constructed and tested in accordance with ASME Pressure Vessel Code, Section IV, for maximum working pressure of 15 psig. Each boiler assembly shall be hydrostatically pressure tested for 60 psig ASME working pressure. Each boiler must bear ASME stamp and be inspected under the National Board Rules.

B. Each steam boiler shall be provided with an ASME listed safety valve set at 15 PSIG and have a discharge capacity equal to or greater than the listed Gross Output of the boiler.

SPEC EDITOR: REVISE THE FOLLOWING PARAGRAPH FOR EACH PROJECT OR EDIT TO SUIT EXISTING CONDITIONS

C. The boiler support frame shall have a maximum width of X'-Y" to allow setting on existing housekeeping pad / or new housekeeping pads as shown on plans.

2.2 BOILER CONSTRUCTION:

A. Boiler shall be four (4) pass water back Scotch Marine type with a front or rear exhaust vent, listed and rated by the American Boiler Manufacturer's Association, Fire tube Section, designed and built to comply with the latest ASME Code rules for fifteen (15) lbs. per sq. inch steam working pressure and be inspected and stamped by an authorized boiler inspector. The boiler shall have not less than 5 sq. ft. of heating surface per boiler horsepower, measured on the fireside (ASME method), a furnace heat release of not more than 142,000 BTU/HR/CFT or as scheduled, whichever is lower, when operating at rating and the rear combustion chamber shall be submerged within the boiler water. The boiler shall have flanged and/or threaded openings for trimmings and external connections; sufficient hand holes and manhole for thorough inspection and cleaning; burner inspection sight ports ant front and rear; gas tight inspection doors; and dial stack thermometer.

B. The boiler shall be factory insulated with 2" fibrous insulation, covered by a sheet metal jacket, assembled with lock seam joints.

2.3 BOILER TRIM:

A. Boiler trim shall include the following items mounted and piped on boiler combination type water column with primary low water cut-off and pump control, auxiliary (manual reset) low water cut-off switch wired to prevent burner operation if water level falls below safe level, chain operated water gauge, gauge glass drain valve and water column drain valve piped into blow-off header; 6" diameter steam gauge mounted adjacent to water column and fitted with pigtail cock and test tee; main blow-off and surface blow-off valves and the main blow-off valves shall be piped into the blow-off header; bronze feed stop and check valves; ASME safety valve(s) sized to comply with Code Requirements and flue gas thermometer and high limit pressure switch wired to prevent burner operation if pressure exceed a set safe limit.

B. The boiler shall be furnished with compound pressure vacuum gauge to indicate the system pressure. The compound gauge shall be of rugged guarded type construction and the gauge dial shall be clearly marked and easy to read.

2.4 BOILER CONTROLS:

A. The operating limit pressure control shall be set according to the design requirements of the heating system. The high limit pressure control should be set approximately 2 psig higher than the low limit control setting (15 psig maximum allowable steam boiler pressure).

SPEC EDITOR: FILL IN DIMENTIONS BELOW, AND REVISE PARAGRAPH TO ACCOMMODATE EACH PROJECT. ENGINEER MUST VERIFY THESE SETTINGS WITH BOILER MANUFACTURER)

B. Each boiler shall have at least two independent automatic low water fuel cut-offs, one of which may be combined low water fuel cut off and pump control. One cut-off control shall be set to function ahead of the other. Functioning of the lower of the two cut-off controls shall cause a safety shutdown (lock out) requiring manual reset. The combination low water cut-off and pump control must be located on the boiler so the burner will become de-energized should the boiler water level fall to within _____ inches above the lowest visible point in the water gauge glass. The boiler feed pump will become energized with a boiler water level of approximately _____ inches above the lowest visible point in the water gauge glass

2.5 BURNERS:

A. The entire fuel burner system and its installation shall conform to the manufacturer's erecting instructions, with applicable codes. The burner fuel shall be natural gas.

B. Each gas burner shall be a retention ring type, with full flame retention, designed for natural gas with a heating value of 1020 BTU per cubic foot. The burner shall be complete with gas-electric ignition, main gas shut-off cock, characterized main gas pressure regulator, manual test cock, modulating valve, high and low gas pressure switches, dual motorized safety shut-off valves, one with proof of closure normally open vent valve and all other devices as required to satisfy the regulatory requirements specified.

SPEC EDITOR: REVISE PARAGRAPH FOR EACH PROJECT. REVIEW THE GAS PRESSURE AVAILABLE AND CORRECT AS REQUIRED

C. The burner heads shall be designed to insure flame retention, stability and quietness of operation. The gas pressure in the boiler room will be approximately _____ (60?) Inches water column at the gas meter outlet, _____ (48?) Inches at the inlet to the gas train and the relief valve at the gas company outlet set at 10 lbs. All the gas train components shall be selected for these operating conditions.

D. The burner shall be full modulation type, equipped with a fuel and airflow control. Burner shall have a turndown capability of 10:1. Please see the schedule for the maximum input to each boiler. Fuel air ratio control shall be achieved by the use of independent servomotors linkage-less control system.

E. The combustion air fan shall be direct drive forward curve design statically and dynamically balanced. Draft equipment shall include combustion air switch, air intake silencers, air dampers actuated by the modulating motor and electronically interlocked with the modulating fuel valves.

F. To ensure reliability, repetition and accuracy a gasketed louver box, capable of registering movement of 0.10", is to be installed on each burner. The louver box shall be of a multiple, opposed, blade type. Each of the blades shall incorporate an EPDM seal on the front edge. The inside walls of the box itself shall have a gasketed seal against the edge of the damper blades. The entire assembly shall be capable of attaining air tightness in accordance with DIN 1946/4. The blades shall be coupled outside the frame using permanently attached drive bars with all adjustments being factory set to have zero play. Louver box shall also incorporate in its design, an air inlet silencer which shall limit the noise due to the sound of the combustion air entering for combustion.

G. Individual Gas Flow Control Valves shall be provided for on each burner. The use of Butterfly type gas valves is prohibited. The Gas Flow Control Valves shall be Honeywell Model: V5197A1003 for firing rates up to 6,300 MBH, V5197A1011 for firing rates up to 16,000 MBH. The appropriate N.P.T. pipe adapters, also manufactured by Honeywell, shall also be furnished. The Individual Servo-Motors shall be attached to the flow control valve in the following manner. The Servo-Motor shall be mounted, on the flow control valve using the adapter coupling and mounting bracket supplied by Fireye. The stems of the Servo-Motors and the stem of the Flow Control Valves shall, in addition to using the adapter coupling above, be permanently attached through the use of roller pins after combustion is set-up in the field.

H. Burner ring shall be designed, installed and adjusted so that the flame will not impinge on rear wall refractory in firebox.

I. Burner unit must meet UL, FM, IRI and the latest NFPA requirements.

J. The burner shall be tuned to achieve maximum firing rate with a noise level of less than 81 Db as measured on the A scale, at 3 feet and shall conform to MIOSHA requirements as well.

2.6 INTEGRATED BURNER CONTROL SYSTEM:

A. Each burner shall be equipped with a Micro-Processor Based Burner Management Flame Safeguard and Parallel Positioning Control System. The control shall fully integrate/provide all the required Flame Safeguard functions and Combustion Control functions into a single module.

B. The entire burner control system and its components shall be as manufactured by Fireye and the model numbers are as below.

C. The system shall consist of Fire eye integrated Nexus module.

D. In addition to providing the standard features as detailed by Fireye in their literature for the control modules specified, the following optional features shall be provided.

1. Servo positioning motors operating at the same voltage as the controller with torque ratings as selected by the burner manufacturer for proper operation with the gas pressure and air box specified.
2. Steam pressure and gas pressure sensors with full self-checking capability.
3. Remote communications capability using the Protocol Interface specified in section 230900 DDC Controls, and elsewhere in the specifications, provide all the necessary communications module, other hardware and software to enable communication between the Burner Control System and owners PC via the Ethernet.
4. O2 Trim capability utilizing zirconium oxide "in situ" fast response probe. The hardware and software for this function shall be provided under Alternate 1.

E. Codes and Standards: The Control shall be listed by Underwriters Laboratories carrying US and C designations for UL 372 Primary Safety Controls for Gas and Oil Fired Appliances.

F. System Hardware

1. Controller; The controller shall provide individual outputs for Burner damper, Ignition, Pilot Valve, Gas Valve , Vent Valve and Auxiliary Relay. In addition provide the manufacturer's standard features as detailed by Fireye in their literature for the controller.
2. Display; The Display shall provide full text messaging and access to the Profile and Option Parameter Set points. The Display shall be cabinet mounted.
3. Sensors; Pressure sensor shall be provided for Steam Pressure indication and control. The Pressure Sensor shall be Fireye Model NX1025 for 0-28PSI. Gas Pressure Sensor shall be provided for gas pressure supervision. The Gas Pressure Sensor shall be Fireye Model NX1020 0 – 4.5 PS1 sensing range.
4. Provide auxiliary low pressure and high pressure switches in the gas train, manual reset type, wired to shut the burner off. The switches shall be model C6097 made by Honeywell. Provide a steam high pressure switch in each boiler, manual reset type, wired to shut the burner off. Switch shall be Honeywell model #L404C1147.
5. Servo Motors; Individual Servo Motors shall be supplied for each of the controlled elements, Air and Gas. These shall be Fireye model NX-series, torque rating to be selected for each project.
6. The wiring base shall provide individual terminal connections for the various inputs and outputs.

7. Expansion Interface; the expansion interface shall provide individual terminal connections for the various inputs and outputs. The expansion interface shall further provide power source and connections for dedicated zirconium oxide in situ probe, when O2 trim system is provided. The expansion interface shall further provide analogue input and output capability for control of a variable speed drives, if they are provided. The expansion interface shall further provide analogue input and output capability for input of external analogue signals and transmission of system variables.
8. Provide Fireye "Nexus Modbus Interface" module in the boiler panel of the 70 boiler HP boiler to map all the three Nexus modules and convert to Modbus protocol. In the same panel provide a E+ series Protocol Interface device as manufactured by Cimetrics to convert the Modbus protocol to BACnet/IP protocol. The University will install an Ethernet outlet next to the boiler control panel and wire the E+ converter to the Ethernet outlet.

2.7 O2 TRIM SYSTEM :(ALTERNATE 1)

A. The O2 values utilized for trim shall be measured by an in situ exhaust gas probe. This shall be a zirconium oxide device.

B. Reaction time of the O2 trim to changes in O2 level (measured at the device) shall be not greater than 5 seconds.

C. The O2 Trim Analyzer shall measure and display via the controller display, wet O2, dry CO2, exhaust temperature, combustion efficiency and applied trim action.

D. The O2 Analyzer shall have no moving parts, pumps or sample lines.

E. O2 trim system and all of its components shall be by Fireye and shall not be combined with equipment provided by other manufacturers.

2.8 CONTROL CABINET :

A. The burner unit shall have steel NEMA 1 control cabinet with a hinged door locked mounted on the boiler frame and shall incorporate the electronic burner sequencing equipment, main disconnect switch, fused, motor starter, relays and burner switch. All wiring in the panel and to the boiler shall be color coded with numbered terminal strip, numbered wiring and engraved plates. Provide five indicating lights to indicate safe water level, low water alarm, flame safety alarm, ignition and main fuel valve. All wiring in the panel and to the boiler and burner controls shall be completely numerically identified.

B. The power supply characteristics shall be 440/208/60/3. Control circuit to be 115 volt, 1 phase, supplied from panel mounted control transformer. There will be two independent power supplies from lockable breakers provided to the boiler control panel. One shall be used for normal boiler function and control transformer. The other shall be utilized to power two (2) optional relays, provided with the panel. The first relay, 3PST rated for 10 amps cont, shall be activated whenever the boiler goes under an alarm condition such as flame failure or low water level. The second relay, DPST rated for 10 amps cont, shall be activated whenever the steam header pressure falls below a set pressure. The pressure sensor shall be furnished, installed (by the mechanical contractor) and wired by the electrical contractor as shown in the plans. Identify the relay contacts terminal strip rows in the shop drawings. These relays will be wired to power a red light and a yellow light outside the boiler room.

SPEC EDITOR: REVISE FOR THE PROJECT. COORDINATE THE POWERING REQUIRMENT WITH THE EE

C. Provide a separate NO contact to open the mechanical room combustion air dampers on boiler start up or set the speed of the supply air fan to match the combustion air requirement. Power the damper operator, if used, from the burner control panel.

2.9 AUXILIARY EQUIPMENT:

A. Additional control sequences are indicated in the plans. All of the required optional additional contacts and devices shall be provided to achieve the specified control sequence, even if the required devices are not specifically noted in these specifications.

2.10 BURNER/BOILER EMISSIONS

A. At the time of start up a calibrated electronic flue gas analyzer shall be used. Provide a print out of the analysis to prove compliance with the following requirements.

B. At low fire, Carbon dioxide shall not exceed 9.50%, oxygen shall not exceed 7.00%, thermal nitrous oxide shall not exceed 75 PPM and no trace of carbon monoxide shall be present.

FILL IN THE CORRECT EMMISSIONS DATA IN THE BELOW PARAGRAPH. BELOW DATA IS SAMPLE ONLY.

C. At high fire, Carbon dioxide shall not exceed 8.00%, oxygen shall not exceed 4.5%, thermal nitrous oxide shall not exceed 75 PPM and no trace of carbon monoxide shall be present [vsml].

2.11 ELECTRICAL CONTROL PANEL LABELING:

A. All control panels provided with burner, boiler or feed water unit shall bear a label from UL, ETL or MET. All wiring including the control wiring shall be installed in a NEC compliant conduit system.

2.12 VALVES, MOTORS AND OTHER ITEMS SPECIFIED ELSEWHERE:

A. All motors shall meet requirements of Section 220513.

B. All valves shall meet requirements of Section 220523.

C. Thermometers and gauges shall meet requirements of Section 220519.

2.13 BOILER DESIGN NOTE:

A. The plans shown are based on Superior/Easco/Johnston Boilers and are intended to be schematic and may not be correct in all details (such as the location of all outlets and inlets) to the unit pre-purchased by the University or being provided by this contractor. The Contractor shall review the shop drawing available from the University or his vendor and allow sufficient funds in his base bid for any additional work required to suit the unit being supplied. All equipment shipped loose shall be installed and piped as directed by the manufacturer and/or owner, by this contractor.

PART 3 - EXECUTION

3.1 FACTORY TESTING

A. Each complete boiler/burner unit must be fire tested at the manufacturer’s plant prior to shipment. Owner has the option to witness the test. Provide at least six weeks' notice. Provide test report for field setup.

3.2 BOILER EFFICIENCY AND PERFORMANCE GUARANTEE:

A. The unit shall operate at minimum of 84.75% overall efficiency, based on higher heating value for natural gas. The following procedure shall be employed for determining the boiler's efficiency. If the indicated efficiency is not achievable, indicate with the bids, achievable efficiency.

B. Operation of the boiler shall be to establish efficient and stable fuel air ratio over the complete load range. Operation of the unit shall then be continued for testing and demonstration of the certified efficiency at rated capacity. This test is to take place on the factory fire test stand.

C. The efficiency test shall consist of the accurate measurements and recording of the following listed factors:

1. O2 and combustibles in stack gases
2. Ambient air temperature
3. Feed water temperature
4. Stack temperature
5. Steam pressure
6. Feed water flow

D. On completion of the test, the following listed heat losses shall be calculated as prescribed under "Heat Loss Efficiency" of the ASME TEST FORM ABBREVIATED EFFICIENCY per Power Test Codes PTC41:

1. Heat loss due to dry gas
2. Heat loss due to moisture in fuel

3. Heat loss due to moisture from combustion of hydrogen

E. The following data shall be utilized in conjunction with the calculation of the above listed heat losses to determine the certified efficiency.

1. Analysis of fuel fired
2. Unaccounted, radiation and convection loss as calculated for the model being tested. Calculated data taken from actual measured test results.

F. The test results shall be certified to the customer by the boiler manufacturer in a report which shall include all supporting data and appropriate calculations showing the resulting efficiency. In the event the test does not yield results which are at least as good as the attached required Minimum Efficiency stated above, the customer may refuse shipment of the unit until such time as the boiler manufacturer can demonstrate the required Minimum Efficiency.

3.3 MECHANICAL SPACE AND INSTALLATION:

A. The equipment shall be installed where shown on the drawings and in accordance with the manufacturer's written instructions.

B. Field installation of the boiler and boiler feed unit shall be done under the supervision of a trained representative of the boiler manufacturer.

C. Provide for connection to electrical service, gas service, steam outlet, condensate inlet, vents, etc., for a complete and operating system.

D. Pipe relief valves, boiler drains, boiler blow downs, etc., to nearest floor drain.

E. Installation shall be performed by a firm certified by the State of Michigan to install boilers of the type specified.

F. The installer shall construct a level concrete housekeeping pad for boiler foundation according to boiler manufacturer's erecting instructions and as shown in the plans.

G. Fill the boiler with water and pressure-test the boiler and system up to the rating of the relief valve. Clean the system per manufacturer's instructions; flush the system to remove all trash and dirt; and refill the system, including inhibitor as specified.

H. Bleed the gas line in a safe manner and energize the boiler controls.

I. All equipment, piping, valves and other components shipped loose shall be installed per manufacturer's instruction, whether indicated or not, in these plans and specifications.

3.4 START UP SERVICE:

A. After the boiler installation is completed, a factory trained technician shall supervise starting, boil out and adjusting the initial fire, schooling for the operators in the care and handling of the equipment and 12 months warranty service after initial firing to cover warranty service. Start-up services shall include all labor, materials and associated costs. The boiler manufacturer shall provide a letter stating the technician is factory trained to start-up their boilers.

3.5 BOIL OUT CHEMICALS:

A. The chemicals for periodic regular boiler water treatment will be by owners' chemical treatment contractor, **WATCON; contact Dave Russell, 419-283-4495.** This contractor shall provide initial chemicals, required for flushing and boil out of the boiler and boiler feed water unit. The chemicals shall be provided by WATCON and paid for by this contractor.

3.6 FIELD TEST:

A. Observe the ignition of the pilot and the main burner to make sure they are smooth and complete. Perform combustion efficiency test, provide a report on measured carbon monoxide, carbon dioxide and oxygen and measured efficiency. Check out the safety controls and verify that they are functioning properly. Set the operating controls for the proper pressure.

B. Submit a blank copy of the proposed start-up report form for review and approval by the Project Engineer at least two (2) weeks before start-up.

C. Start-up report shall include, but not necessarily be limited to the following:

1. Amperage and air flow on forced draft (combustion air) fan at low and high fire
2. Gas pressures prior to and after regulators
3. Gas pressure through gas train
4. Draft pressure at boiler outlet
5. Combustion efficiency test
6. Safety control check out
7. Operating control check out

D. Operate the boiler for no less than 2 hours. Provide a written report, through channels and on company letterhead, stating that ignition is proper, safety controls have been checked and operating controls are set and functioning properly. The system is not complete until this report has been received.

E. When the weather is cold enough for the boiler to be fully loaded perform proof of capacity test and burner modulation test. These tests will have to be performed during the month of December or January.

3.7 PROOF OF CAPACITY AND MODULATION:

A. The maximum capacity, turn down ratio and full modulation from low fire to high fire shall be proven by "clocking the meters".

B. The amount of gas burnt and the steam generated will be measured by clocking the existing gas meter and the existing flow meter in the boiler feed water line to each boiler. The meters shall be clocked by operating one boiler at a time.

C. The gas input will be calculated using the following formula:

$$\text{Input in cft/hr} = \frac{\text{CUFT X 3600 X PC1 X TC1}}{\text{TIME}}$$

Where CUFT is gas used in the measured TIME interval, PC1 is the pressure correction factor (check with Michcon 0.951?), TC1 is temperature correction factor (check with Michcon 1.104?) and TIME is time interval in seconds for which CUFT was measured by reading the meter.

D. The steam output will be calculated using the following formula:

$$\text{Steam output in PPH} = \frac{\text{FLOW X 3600 X 8.33}}{\text{TIME}}$$

Where "FLOW" is the measured feed water volume in gallons per the given "TIME" interval in seconds.

E. The burner shall function properly at the maximum output, at part loads and at low fire start up demonstrating full modulation.

F. The commissioner and a representative from the Outlying Boiler Group shall be present during all the testing. Provide at least 7 days' notice prior to scheduling the tests. If the boilers cannot be loaded to the rated capacity, the contractor shall return to perform this work during the winter season; date and time will be scheduled by the Outlying Boiler Group from the University.

G. If the boilers fail the capacity and or modulation tests, the contractor shall remedy the situation and complete the test successfully within 30 calendar days. If the contractor fails to do so, the university will take whatever remedial actions the university sees necessary. The university will back charge the contractor for all the costs associated with the remedial actions.

END OF SECTION 235240

UNIVERSITY OF MICHIGAN
ARCHITECTURE, ENGINEERING AND CONSTRUCTION

ARCHITECTURE & ENGINEERING
326 East Hoover, Mail Stop B
Ann Arbor, MI 48109-1002
Phone: 734-764-3414
Fax: 734-936-3334

BuildingName
The Description of the Project
P00000000 0000

SPECIFICATION DIVISION 23

NUMBER SECTION DESCRIPTION

DIVISION 23 HEATING, VENTILATING AND AIR CONDITIONING (HVAC)
SECTION 235300 - HEATING BOILER FEEDWATER AND BLOW-DOWN EQUIPMENT

END OF CONTENTS TABLE

DIVISION 23 HEATING, VENTILATING AND AIR CONDITIONING (HVAC)
SECTION 235300 - HEATING BOILER FEEDWATER AND BLOW-DOWN EQUIPMENT

REVISIONS:
NOV.9,2004: NEW SECTION CREATED FOR THE MASTER SPECIFICATIONS.
MAR.11,2005: LAST REVISION.

PART 1 - GENERAL

1.1 RELATED DOCUMENTS

INCLUDE PARAGRAPH 1.1.A AND B IN EVERY SPECIFICATION SECTION. EDIT RELATED SECTIONS 1.1.B TO MAKE IT PROJECT SPECIFIC.

A. Drawings and general provisions of the Contract, Standard General and Supplementary General Conditions, Division 1 Specification Sections, and other applicable Specification Sections including the Related Sections listed below, apply to this Section.

SPEC EDITOR: REVISE AS REQUIRED FOR EACH PROJECT

1.2 SCOPE OF WORK:

A. Provide packaged boiler feed water preheat system, packaged boiler feed water system (no preheat), Deaerator system, blowdown tank and accessories as specified and scheduled.

1.3 QUALITY ASSURANCE:

SPEC EDITOR: DELETE ITEMS NOT IN THE PROJECT

A. Codes and Standards:

1. UL Compliance: The complete Deaerator, boiler feed water unit, unit shall be approved and labeled as a unit by Underwriters Laboratories.
2. ASME Compliance: Construct Deaerator, boiler feed water unit, blow down tank in accordance with ASME Boiler and Pressure Vessel Code, Section IV "Heating Boilers".
3. UL and NEMA Compliance: Provide all ancillary electrical components which have been listed and labeled by UL and comply with NEMA standards.
4. FM Compliance: Provide control devices and control sequences in accordance with requirements of Factory Mutual System (FM).
5. NEC compliance: Provide control panels and assembly and wiring of all devices in accordance with requirements of latest edition of NEC. All control panels shall have a label indicating listing by a nationally recognized testing agency such as UL, ETL or MET.

B. Pressure Vessel Warranty:

1. If, within fifteen (15) years the tank fails under normal use and service, the manufacturer shall replace tank and the part or component as required for proper operation of the unit.

C. Complete Package Warranty:

1. The complete package shall be warranted for a period of 12 months from the date of acceptance of the installation by the University.

1.4 ACCEPTABLE MANUFACTURERS:

SPEC EDITOR: ALWAYS SPECIFY ELEVATED TANK AND 212 F PUMPS GOOD 2' NPSH

A. Subject to compliance with requirements, provide boiler feed-water system by one of the following manufacturers:

1. ITT Domestic Model CMED
2. Industrial Steam
3. Skidmore

B. Subject to compliance with requirements, provide blow-down separator by one of the following manufacturers:

1. PENN
2. Industrial Steam
3. Wilson
4. Johnston Boiler
5. Cemline

C. Subject to compliance with requirements, provide Deaerator by one of the following manufacturers:

1. Sellers Engineering
2. Industrial Steam
3. *add another vendor*

PART 2 - PRODUCTS

2.1 BOILER FEED WATER UNIT (WITHOUT PREHEAT):

SPEC EDITOR: REVISE THE NUMBER OF PUMPS FOR EACH PROJECT. BOILER FEED WATER UNIT WITH NO PREHEAT USED IN ALL LOW PRESSURE BOILERS.

A. Furnish and install according to drawings and manufacturers' requirements single compartment boiler feed unit as shown on drawings. It shall consist of the following: (1) single compartment steel receiver with (3) three boiler feed pumps, electrical controls and accessories.

B. The boiler feed receivers shall be of welded ¼ inch steel construction single compartment design, elevated to meet the 2' NPSH requirements of the pumps. The unit shall be factory equipped with the following

1. Make up water assembly consisting of externally adjustable float switch and solenoid valve sized equal to one of the boiler feed pumps
2. Make up valve strainer
3. Three valve bypass for make-up valve
4. Make up valve pressure gauge

5. Manhole for inspection and repairs and Inspection port hand hole
6. Chemical injection quill
7. One gauge glass assembly with shut off valves
8. One dial thermometer
9. One set of lifting eyes
10. Three pumps suction, discharge, strainers, check valves and pressure gauge etc.
11. One low level pump cut off switch and low water level alarm switch.
12. Cast iron basket strainer with bronze screen on condensate inlet location
13. Sampling valve.

C. A magnesium anode shall be mounted in the receiver compartment.

D. The pumps shall be 2' NPSH close coupled vertical design with axial flow impeller that builds positive suction pressure of 5 psig. Provide a cast bronze impeller that is bronze fitted to the cast iron pump housing with a bronze sleeve. The mechanical seal shall be rated for 250F service. Provide isolation valves, check valve and strainers as shown in plans for each pump.

E. The unit manufacturer shall mount and wire a separate NEMA 1 control cabinet with hinged door and grounding lug and include the following:

1. Combination magnetic starters with overload relays and circuit breakers or fused disconnects for each pump.
2. Door interlock.
3. Momentary contact test buttons for each pump.
4. Numbered terminal strip.
5. H-O-A switch with indicating light for each pump.
6. Contacts for ON-OFF signals from boiler control panel. (The pump to run only when the corresponding boiler is operational).
7. Low level alarm.
8. Low water cutoff.
9. Control transformer with secondary fused 115 volts single phase control circuit.
10. Single point power connection.
11. Totalizing run hour meter for each pump.
12. Alarms to be audible and visual with silencing push button. Provide indicating light for each alarm. All indicating lights shall be push to test type.
13. All electrically operated valves shall be powered from the control cabinet.
14. Single point power connection.

F. Control Sequence: Under normal operation the three boiler feed pumps are left in auto mode. The boiler level controllers cycle the respective boiler feed water pump.

2.2 PREHEATING TYPE BOILER FEED WATER UNIT:

SPEC EDITOR: REVISE THE NUMBER OF PUMPS FOR EACH PROJECT. PREHEATING TYPE BOILER FEED WATER UNIT IS REQUIRED ONLY FOR HIGH PRESSURE BOILERS.

A. Furnish and install according to drawings and manufacturers' requirements single compartment preheat boiler feed unit as shown on drawings. It shall consist of the following: (1) single compartment steel receiver with (3) three boiler feed pumps, (1) direct injection steam heating assembly, electrical controls and accessories.

B. The boiler feed receivers shall be of welded ¼ inch steel construction single compartment design, elevated to meet the NPSH requirements of the pumps. The unit shall be factory equipped with the following

1. Steam heater as described below.
2. Make up water assembly consisting of externally adjustable float switch and solenoid valve sized equal to one of the boiler feed pumps
3. Make up valve strainer
4. Three valve bypass for make-up valve
5. Make up valve pressure gauge
6. Inspection port hand hole
7. Chemical injection quill
8. One gauge glass assembly with shut off valves
9. One dial thermometer
10. One set of lifting eyes
11. Three pumps suction, discharge and pressure relief valves, strainers, check valves and pressure gauge etc.
12. Three valve bypass with strainer, steam regulating valve, upstream and downstream pressure gauges.
13. One low level pump cut off switch and alarm
14. Cast iron basket strainer with bronze screen on condensate inlet location
15. Sampling valve

C. A magnesium anode shall be mounted in each receiver compartment.

SPEC EDITOR: REVISE AS REQUIRED FOR EACH PROJECT

D. An injection steam heating assembly shall consist of a double flange mounted injection stainless steel tube, Spence or Hoffman pressure and temperature regulator, wye strainer and pressure gauge. Capacity to heat 5 gpm from 50F to 200F, 9 psig steam at the inlet valve.

SPEC EDITOR: REVISE AS REQUIRED FOR EACH PROJECT

E. The pumps shall be 2’ NPSH close coupled vertical design with axial flow impeller that builds positive suction pressure of 5 psig. Provide a cast bronze impeller that is bronze fitted to the cast iron pump housing with a bronze sleeve. The mechanical seal shall be rated for 250F service. Provide isolation valves, check valve and strainers as shown in plans for each pump.

F. The unit manufacturer shall mount and wire a separate NEMA 2 control cabinet with hinged door and grounding lug and include the following:

1. Combination magnetic starters with overload relays and circuit breakers or fused disconnects for each pump.

2. Door interlock.
3. Momentary contact test buttons for each pump.
4. Numbered terminal strip.
5. H-O-A switch with indicating light for each pump.
6. Contacts for ON-OFF signals from boiler control panel. (The pumps to run only when anyone of the two boilers are operational).
7. Low level alarm.
8. Low water cutoff.
9. Control transformer with secondary fused 115 volts single phase control circuit.
10. Single point power connection.
11. Totalizing run hour meter for each pump.
12. Alarms to be audible and visual with silencing push button. Provide indicating light for each alarm. All indicating lights shall be push to test type.
13. All electrically operated valves shall be powered from the control cabinet.
14. Single point power connection.

G. Control Sequence: Under normal operation the three boiler feed pumps are left in auto mode. The boiler level controllers cycle the respective boiler feed water pump.

SPEC EDITOR: THE FOLLOWING IS A COPY OF THE DEAERATOR SPECIFICATIONS USED FOR G G BROWN BOILER REPLACEMENT PROJECT. VERIFY WITH OUTLYING BOILER GROUP WHETHER TRAY AND SPRAY TYPE IS REQUIRED INSTEAD OF THIS.

2.3 DEAERATING TYPE BOILER FEED WATER UNIT:

SPEC EDITOR: REVISE AS REQUIRED FOR EACH PROJECT

A. Furnish and install according to drawings and manufacturers' requirements single compartment pressurized De-aerating boiler feed unit as shown on drawings. The unit shall be nominally rated for 35,000 lbs/hr guaranteed to remove oxygen in the condensate to a level of not more than 0.005 cc/liter. It shall consist of the following: (1) single compartment steel receiver with (3) three boiler feed pumps, (1) direct injection steam heating assembly, (1) de-aerating spray and tray section, electrical controls and accessories. The receiver shall be constructed in accordance with ASME code and 50 psig stamped.

B. The boiler feed receivers shall be of welded carbon steel construction single compartment design, elevated to meet the NPSH requirements of the pumps. The de-aerator shall be factory equipped with the following

1. Steam heater as described below.
2. Spray manifold
3. Chemical injection quill
4. One gauge glass assembly
5. One receiver pressure gauge
6. One relief valve
7. One throttling vent valve with orifice plate
8. One overflow drainer
9. One dial thermometer

10. One set of lifting eyes
11. Three pump suction, discharge and automatic (balancing) flow control valves, strainers, check valves and pressure gauge etc.
12. One steam, strainer, pressure gauge, isolation valves etc.
13. One low water level switch, low water level auto off and alarm, & high level alarm.
14. One electric make up valve and make up valve modulating controller.
15. Manhole.
16. Plasite 7156 epoxy lining
17. Internal overflow loop with anti-siphoning orifice
18. Sampling valve.
19. One makeup water strainer and pressure gauge
20. One manual 3 valve bypass for makeup valve.
21. All of the above (except for the accumulator tank) factory assembled, pre-piped and pre-wired on a floor mounted structural steel base.

C. A stainless steel de-aerating section with integral stainless stell cascade trays containing a vent condensing spray manifold with stainless steel spray nozzles shall be integral to condensate receiver. A dial thermometer and pressure gauge shall be integral part of the manifold assembly.

SPEC EDITOR: REVISE AS REQUIRED FOR EACH PROJECT

D. The capacity of the make-up valve shall be 20 gpm, at a 20 psig supply pressure.

E. A magnesium anode shall be mounted in the receiver compartment.

SPEC EDITOR: REVISE AS REQUIRED FOR EACH PROJECT

F. A direct injection steam heating assembly shall consist of a double flange mounted injection tube, electric steam control valve and temperature regulator, wye strainer and pressure gauge. Capacity to heat 70 gpm from 140F to 227F, 9 psig steam at the regulator. Provide a three valve bypass.

G. The centrifugal boiler feed pumps shall be flange mounted on the receiver suction piping. The pumps shall be 2-stage close coupled vertical design. The first stage shall be a stainless steel axial flow impeller discharging through a stainless steel diffuser to the second stage. The second stage shall be a cast bronze impeller that is bronze fitted to the cast iron pump housing with a renewable bronze wearing ring. The mechanical seal shall be rated for 250F service. Provide isolation valves, check valve and strainers as shown in plans for each pump. Each pump shall be of 2' NPSH design.

H. The unit manufacturer shall mount and wire a separate NEMA 2 control cabinet for the de-aerator. Cabinet shall have hinged door and grounding lug and include the following:

1. De-aerator
2. Combination magnetic starters with overload relays and circuit breakers for each pump.
3. Door interlock.
4. Momentary contact test buttons for each pump.

5. Numbered terminal strip.
6. H-O-A switch with indicating light for each pump.
7. Contacts for ON-OFF signals from boiler control panel. (Each pump to run only when the respective boiler level controller calls for it).
8. Low level and high level alarms.
9. Low water cutoff.
10. Control circuit disconnect switch
11. Power on light
12. Control transformer with secondary fused 115 volts, single phase control circuit.
13. Alarms to be audible and visual with silencing push button. Provide indicating light for each alarm. All indicating lights shall be push to test type.
14. All electrically operated valves shall be powered from the control cabinet.
15. Single point power connection.

I. Control Sequence: The boiler to be run is selected manually and run. While selecting the boiler the corresponding the boiler feed water pump is set in auto mode. The boiler level controller cycles the respective boiler feed water pump. The built in level controller in the de-aerator unit modulates the make-up valve.

J. The entire unit shall be factory assembled and wired on a 48" high structural steel support. The unit shall be started up and operating personnel trained by a factory authorized field representative.

2.4 BLOW DOWN SEPARATOR:

A. Furnish and install as shown on the drawings a boiler blowdown separator with stainless steel striking plate, minimum 3/8" thickness, at point of inlet impingement.

B. Separator shall be designed in accordance with ASME code, shall comply with Michigan regulations and shall handle blowdown from the following boilers operating at 60 psig. For sizing purposes assume only two boilers will blow down at any given time. Minimum size as shown in the schedule. If the minimum size shown is inadequate, advise the U of M project engineer.

SPEC EDITOR: REVISE AS REQUIRED FOR EACH PROJECT

1. Boiler No. LP-1 125 HP
2. Boiler No. LP-2 125 HP
3. Boiler No. LP-3 70 HP

C. Separator shall include the following accessories:

1. Pressure gauge.
2. After cooler with automatic temperature regulating valve, strainer and bimetal thermometer.
3. Three angle legs for floor mounting or wall brackets for wall mounting. See plans for requirements.

2.5 ELECTRICAL CONTROL PANEL LABELING:

A. All control panels provided with burner, boiler feed water unit shall bear a label from UL, ETL or MET. All wiring including the control wiring shall be installed in a NEC compliant conduit system.

2.6 VALVES, MOTORS AND OTHER ITEMS SPECIFIED ELSEWHERE:

A. All motors shall meet requirements of Section 220513.

B. All valves shall meet requirements of Section 220523.

C. All piping shall meet requirements of Sections 221113 and 232216.

D. Thermometers and gauges shall meet requirements of Section 220519.

E. Unit to be field insulated per section 220719.

PART 3 - EXECUTION

3.1 START UP SERVICE:

A. After the boiler feed water/ Deaerator unit installation is completed, a factory trained representative shall supervise starting, boil out and adjusting the pump flow rates, schooling for the operators in the care and handling of the equipment and provide warranty service after initial firing.

3.2 MECHANICAL SPACE AND INSTALLATION:

A. The equipment shall be installed where shown on the drawings and in accordance with the manufacturer's written instructions.

B. Field installation of the boiler feed unit shall be done under the supervision of a trained representative of the unit manufacturer.

C. Provide for connection to electrical service, steam outlet, condensate inlet, vents, etc., for a complete and operating system.

D. Pipe relief valves, drains, blow downs, etc., to nearest floor drain.

E. Installation shall be performed by a firm certified by the State of Michigan to install equipment specified.

F. The installer shall construct a level concrete housekeeping pad for equipment foundation according to unit manufacturer's erecting instructions and as shown in the plans.

G. Clean the system per manufacturer’s instructions; flush the system to remove all trash and dirt; and refill the system, including inhibitor as specified.

H. All equipment, piping, valves and other components shipped loose shall be installed per manufacturer's instruction, whether indicated or not, in these plans and specifications.

END OF SECTION 235300

UNIVERSITY OF MICHIGAN
ARCHITECTURE, ENGINEERING AND CONSTRUCTION

ARCHITECTURE & ENGINEERING
326 East Hoover, Mail Stop B
Ann Arbor, MI 48109-1002
Phone: 734-764-3414
Fax: 734-936-3334

BuildingName
The Description of the Project
P00000000 0000

SPECIFICATION DIVISION 23

NUMBER SECTION DESCRIPTION

DIVISION 23
SECTION 235716 – STEAM-TO-WATER HEAT EXCHANGERS

END OF CONTENTS TABLE

DECEMBER 2014 - ADOPTED AS NEW MASTER.

DIVISION 23
SECTION 235716 – STEAM-TO-WATER HEAT EXCHANGERS

PART 1 - GENERAL

1.1 RELATED DOCUMENTS

INCLUDE PARAGRAPH 1.1.A AND B IN EVERY SPECIFICATION SECTION. EDIT RELATED SECTIONS 1.1.B TO MAKE IT PROJECT SPECIFIC.

A. Drawings and general provisions of the Contract, Standard General and Supplementary General Conditions, Division 1 Specification Sections, and other applicable Specification Sections including the Related Sections listed below, apply to this Section.

B. Related Sections:

1. Section 019100/019110 - Commissioning
2. Section 232116 - Hydronic Piping Specialties
3. Section 232216 - Steam & Condensate Piping Specialties

1.2 SUMMARY

A. Section Includes

1. Shell and tube, steam-to-hot water, low pressure heat exchangers, components and accessories. Maximum operating steam pressure of 15 PSI.

1.3 SUBMITTALS:

A. Provide product data as follows:

1. Rated capacity, weight with and without liquid, furnished specialties and accessories.
2. Manufacturer's assembly type shop drawings indicating certified dimensions, required clearances (including tube pull clearance), pipe connection types, locations and sizes, component assembly methods, support details, and location and size of all field connections.
3. Certified computerized selections based on scheduled conditions, including leaving water temperature and flow rates and fouling factor allowances.
4. Shipping, rigging, handling, storage, installation, start-up, operation, and maintenance instructions.
5. Certification of compliance with ASME, UL, & ASHRAE fabrication requirements, specified elsewhere in these specifications.

1.4 QUALITY ASSURANCE:

A. Manufacturers and Products: The products and manufacturers specified in this Section establish the standard of quality for the Work. Subject to compliance with all requirements, provide specified products from the manufacturers named in Part 2.

B. Reference Standards: Products in this section shall be built, tested, and installed in compliance with the following quality assurance standards; latest editions, unless noted otherwise.

1. ANSI /ASME SEC VIII Div. 1 Boiler and Pressure Vessel Code for construction and testing.

ALTHOUGH ATYPICAL, IF THE HEAT EXCHANGER MUST BE DISASSEMBLED TO BE SET IN PLACE, PROVIDE INFORMATION ON THE DRAWINGS AND OTHER CONTRACT DOCUMENTS DESCRIBING DISASSEMBLY/REASSEMBLY REQUIREMENTS.

1.5 DELIVERY, STORAGE, AND HANDLING:

A. Ship heat exchangers with weather-protected wrap for storage outdoors. Protect pipe openings and other sensitive components with heavy plastic or other durable means to ensure unit cleanliness is maintained during shipping and storage.

1.6 WARRANTY

A. Provide a complete parts and labor warranty for a minimum of 1 year from the date of Substantial Completion.

PART 2 - PRODUCTS

2.1 MANUFACTURERS

A. Acceptable Manufacturers:

1. Bell & Gossett
2. Taco
3. Armstrong
4. Mueller

2.2 GENERAL

A. Provide factory assembled heat exchangers consisting of shell steam and water tube construction. Include the following accessories: relief valve, air vent, and vacuum breaker, of proper size for the heat exchanger.

B. All accessories listed above shall be provided by the heat exchanger manufacturer.

C. Tag heat exchanger with mark and design capacity scheduled in the construction documents. Mark all material shipped loose to easily identify it with the corresponding heat exchanger.

D. Design, materials, manufacturing methods, and factory-testing of the heat exchanger units shall be in conformance with all applicable sections of the ASME code, and shall bear the standard ASME symbol.

E. Design working pressure and temperature shall be 125 PSIG and 375 deg. F.

F. Tube bundle shall be removable for maintenance and replacement.

G. Head material shall be cast iron or steel.

H. The heat exchanger shall be pressure tested at the factory prior to shipment.

I. All nozzle connections shall be factory sealed prior to shipment to prevent the entrance of foreign materials.

J. Flanged pipe connections shall be provided for all sizes 2-1/2" or greater. Flanged or screwed pipe connections shall be provided for all sizes 2" or smaller.

2.3 SHELL REQUIREMENTS

A. Shell material shall be steel.

B. Steam connection size shall match drawing pipe connection size.

2.4 TUBE REQUIREMENTS

A. Tube bundle shall consist of 3/4 inch copper tubes with a minimum wall thickness of 0.035”.

B. The tube sheet, tie rod, spacers, and baffle material shall be steel.

C. Water connection size shall limit nozzle velocity to no greater than 8 FPS.

D. Tube velocity shall be limited to no more than 7.5 FPS.

2.5 PERFORMANCE REQUIREMENTS

A. Refer to schedules on Drawings for performance requirements.

1. Fouling Factor Allowance: water side tubes: 0.00025 $h \cdot ft^2 \cdot °F/Btu$
2. Fluid type shall be as noted in the drawing schedule and shall be factored into the performance data.

PART 3 - EXECUTION

3.1 EXAMINATION, STORAGE, AND PREPARATION

A. Upon delivery, validate integrity of the delivery protection has been maintained, the heat exchanger is undamaged, and all accessory parts were delivered. Reject damaged units. Restore protection. Provide a delivery report indicating unit condition to the Owner’s Representative.

B. Rig units off delivery trucks. Comply with Manufacturer's rigging instructions.

C. Store units protected from weather, dirt, water, construction debris, and physical damage.

D. Just before installation, verify that units are undamaged. Provide a pre-installation report indicating unit condition to the Owner’s Representative.

E. Examine roughing-in for equipment support, anchor-bolt sizes and locations, piping, and miscellaneous connections to verify actual locations, sizes, and other conditions affecting performance, maintenance, and operations, before equipment installation.

1. Locations indicated on Drawings are approximate. Determine exact locations before roughing-in for piping and other connections.

F. Rig units into final locations. Comply with Manufacturer's rigging instructions.

MAKE THE BELOW ARTICLE PROJECT SPECIFIC, AS REQUIRED.

3.2 HEAT EXCHANGER INSTALLATION

A. Install units in strict compliance with manufacturer's installation instructions and Related Sections. Maintain manufacturer's recommended clearances for service and maintenance.

B. Install heat exchangers on support structures to achieve proper steam trap inlet leg height and to allow trap gravity drainage.

C. Install accessories shipped loose for Contractor installation, including relief valves, vacuum breakers and air vents, in accordance with manufacturer recommendations.

D. Provide offset pipe connections, or make other provisions, to allow adequate space for tube bundle removal without removal of pipe, components or accessories.

E. Insulate exchangers with insulation of same type and thickness as the connecting steam piping. Do not insulate or conceal nameplates or ASME stamps.

F. Provide isolation valves for service and maintenance of each heat exchanger.

G. Provide temperature and pressure gauges at the water side inlet and outlet of each exchanger, and as detailed.

H. The heat exchanger shall be bypassed during system clean and flush.

I. Complete the manufacturer’s pre-start checklist and submit to Owner’s Representative.

3.3 COMMISSIONING

A. Perform the commissioning activities as outlined in Related Section “Commissioning” and other requirements of the Contract Documents.

END OF SECTION 235716

UNIVERSITY OF MICHIGAN
ARCHITECTURE, ENGINEERING AND CONSTRUCTION

ARCHITECTURE & ENGINEERING
326 East Hoover, Mail Stop B
Ann Arbor, MI 48109-1002
Phone: 734-764-3414
Fax: 734-936-3334

BuildingName
The Description of the Project
P00000000 0000

SPECIFICATION DIVISION 23

NUMBER SECTION DESCRIPTION

DIVISION 23 HEATING, VENTILATING AND AIR CONDITIONING (HVAC)
SECTION 235719 - PLATE TYPE LIQUID-TO-LIQUID HEAT EXCHANGER

END OF CONTENTS TABLE

2014-01-06: IMPROVED LEAD FREE REQUIRMENTS TO REFLECT U.S SAFE DRINKING WATER ACT REQUIREMENTS THAT WENT INTO EFFECT JAN. 4, 2014. D.KARLE FOR MTT.

DIVISION 23 HEATING, VENTILATING AND AIR CONDITIONING (HVAC)
SECTION 235719 - PLATE TYPE LIQUID-TO-LIQUID HEAT EXCHANGER

PART 1 - GENERAL

1.1 RELATED DOCUMENTS

INCLUDE PARAGRAPH 1.1.A AND B IN EVERY SPECIFICATION SECTION. EDIT RELATED SECTIONS 1.1.B TO MAKE IT PROJECT SPECIFIC.

A. Drawings and general provisions of the Contract, Standard General and Supplementary General Conditions, Division 1 Specification Sections, and other applicable Specification Sections, in particular the Related Sections listed below, apply to this Section.

B. Related Sections:

1. Section 019100/019110 - Facilities Commissioning
2. Section 221113 - Piping Materials and Methods

1.2 SUMMARY

A. Section Includes:

1. Plate style heat exchangers.

1.3 SUBMITTALS

A. Product Data: Include catalog illustrations, model, rated capacities, performance, weights, dimensions, component sizes, rough-in requirements, piping details, materials of construction, accessories, operating and maintenance clearance requirements.

B. Provide the following additional information:

1. Pipe connection size and connection type.
2. When additional frame length is specified to allow for a future capacity increase, provide substantiating "future" performance data including quantity of plates and stack depth.

C. Installation, Operation and Maintenance Manuals

1.4 QUALITY ASSURANCE

A. Manufacturers and Products: The products and manufacturers specified in this Section establish the standard of quality for the Work. Subject to compliance with all requirements, provide specified products from the manufacturers named in Part 2.

B. Reference Standards: Products in this section shall be built, tested, and installed in compliance with the specified quality assurance standards, latest editions, unless noted otherwise.

1. ANSI/AHRI Standard 400 Liquid to Liquid Heat Exchangers

DESIGNER SHOULD UNHIDE THE BELOW TEXT IF THE APPLICATION WARRANTS A U-STAMP.

2. ANSI/ASME SEC VIII Div. 1 Boiler and Pressure Vessel Code with U-1 stamp.
3. ASHRAE 90.1 Energy Standard for Buildings Except Low Rise Residential Buildings
4. National Sanitation Foundation NSF/ANSI-61 (potable drinking water) and NSF-61 Annex G (listed as ≤ 0.25% weighted average lead content) (and/or NSF/ANSI-372) and Annex F.
5. U.S Safe Drinking Water Act.

1.5 DELIVERY, STORAGE, AND HANDLING

A. Ship all components in weather-proof wrap for storage outdoors. Protect nozzle pipe openings with heavy plastic and other durable means to ensure cleanliness and prevent damage during shipping and storage. Maintain protection during installation.

1.6 WARRANTY

A. Provide a complete warranty for parts and labor for a minimum of one year from the date of Substantial Completion.

PART 2 - PRODUCTS

2.1 MANUFACTURERS

A. Acceptable Manufacturers:

1. Alpha-Laval
2. Armstrong
3. Bell and Gossett
4. Mueller
5. Tranter

2.2 PLATE HEAT EXCHANGER

A. The heat exchanger shall consist of stainless steel heat transfer plates of corrugated/chevron design, steel end plates and frame, and a metal carrying bar that allows disassembly of the plates for cleaning and seal replacement without disconnecting piping or removing plates. Provide brazed plate type when indicated. Units shall be designed for a minimum 150 PSIG working pressure at 225°F.

B. Flow through the plates shall be single pass counter flow design.

C. Heat transfer plates shall be of type 304 or 316 stainless steel with a minimum thickness of 0.40 millimeter, or as required to meet pressure requirements.

D. Heat transfer plate ports shall be double gasketed to prevent cross contamination of hot and cold side fluids.

E. Gaskets shall be of a one piece design formulated from nitrile or peroxide cured EPDM rubber for operating temperatures below 180°F, and peroxide cured EPDM for applications above 180°F.

F. Heat transfer plates shall be grooved to accept the gaskets. The gaskets shall be held in place with gasket clips to minimize movement and to provide a seal. Glued gaskets are not acceptable.

INDICATE DOUBLE WALL UNITS ON THE SCHEDULE FOR POTABLE WATER APPLICATIONS.

G. Double wall units shall include an air space between adjoining heat transfer plates to allow for any leakage to exit to atmosphere and avoid cross contamination.

H. Heat exchangers used for domestic water service shall be of lead free construction and in compliance with NSF/ANSI-61 and NSF-61 Annex G (and/or NSF/ANSI-372) and Annex F, and the U.S. Safe Drinking Water Act.

I. Provide OSHA approved splash guard, enclosing exterior of heat transfer plates and gasketed surfaces, to prevent leaks from spraying.

J. Heat transfer plate carrying bar shall be of carbon steel with zinc chromate finish, aluminum, or stainless steel.

FOR FREE COOLING APPLICATIONS, SPECIFY THAT THE HEAT EXCHANGER FRAME LENGTH ALLOW PLATES TO BE ADDED IN THE FUTURE TO BOOST CAPACITY 25% BY UN-HIDING THE HIDDEN TEXT IN THE PARAGRAPH BELOW. CONSIDER IF YOUR APPLICATION WARRANTS SPECIFYING ROOM FOR MORE THAN A 25% CAPACITY INCREASE.

K. Fixed frame plates, frame, and movable pressure plates shall be corrosion resistant epoxy painted carbon steel. Provide zinc plated carbon steel or stainless steel bolting system ("tie-rods") to compress plate pack. No special tools shall be required to assemble or disassemble the heat exchanger. Provide a frame length that will allow for additional plates to be added to provide a 25 percent increase in exchanger capacity at the scheduled inlet and outlet temperatures.

L. Connections 2.5 inches and smaller shall be alloy nozzles with NPT threaded ends meeting ASME B1.20.1. Connections 3 inches and larger shall be alloy nozzles with flanged ends meeting ASME B16.5 for steel and stainless-steel flanges, and meeting ASME B16.24 for copper and copper-alloy flanges (provide connections that match the connecting pipe material). Alternatively for connections 3" and above, provide studded ports that allow proper sealing to the same flange types specified for nozzles. Connections shall be integral to the frame or pressure plate; inlet and outlet connections shall be on the same side of the heat exchanger. Maximum velocity through nozzle or studded port shall be 25 feet per second at scheduled flow rates. The heat exchanger connections shall be labeled to indicate fluid type and flow direction.

DESIGNER SHOULD UNHIDE THE BELOW TEXT IF THE APPLICATION WARRANTS A U-STAMP.

M. Unit shall be designed, constructed, and tested in accordance with all applicable ASME Code Rules and shall have a manufacturer's data report for pressure vessels, form No. U-1. Form U-1 shall be furnished to the engineer for the owner upon request. An authorized inspector, holding a National Board commission, certifying that construction conforms to the latest ASME Code for pressure vessels must sign this form. The ASME "U" symbol shall be stamped on the heat exchanger. In addition, each unit shall be registered with the National Board of Boiler and Pressure Vessel Inspectors.

N. The plate heat exchanger shall be shipped to the site as a completely assembled unit.

O. Where indicated provide heat exchanger of alternate materials of construction as noted on schedule and drawings.

THE INSULATION JACKET SPECIFIED BELOW IS APPROPRIATE FOR THE OPERATING RANGE ANTICIPATED TO BE MOST TYPICAL FOR U-M APPLICATIONS (40°F-105°F, I.E. "FREE COOLING") AND TO MIMIC ASHRAE 90.1-2010 ENERGY CODE REQUIREMENTS. IF THE HX IS USED IN AN APPLICATION AT TEMP.S SIGNIFICANTLY HIGHER OR LOWER THAN THIS RANGE, REVISE ACCORDINGLY (FOR APPROPRIATE THICKNESS AND "C" VALUES, ASHRAE 90.1 PIPE INSULATION THICKNESS REQUIREMENTS MAY BE CONSULTED FOR GUIDANCE). IF CONDENSATION IS A CONCERN, DELETE THE BELOW AND REQUIRE FLEXIBLE CLOSED CELL INSULATION, E.G. ARMAFLEX.

2.3 HEAT EXCHANGER INSULATION JACKET

A. Heat exchanger shall include a 1" thick insulation blanket system with jacket designed specifically to fit the heat exchanger overall size and nozzle openings. The blanket shall cover both end plates, the entire plate pack (below the plate pack compression bolts) and any nozzle carrying fluid ≤ 60°F or ≥ 105°F. The blanket shall be removable by the use of Velcro® or wire tie fasteners. Insulation blanket shall have a maximum conductivity of 0.27 btu inch/h ft^2 °F. The jacket shall be PTFE Teflon impregnated fiberglass cloth.

2.4 SOURCE QUALITY CONTROL

A. The heat exchanger shall be pressure tested at the factory prior to shipment. Provide a report of the results of the pressure test, certified with a signature of an officer of the manufacturer.

PART 3 - EXECUTION

3.1 EXAMINATION AND PREPARATION

A. Prior to installation, store units protected from weather, dirt, water, construction debris, and physical damage. Nozzle ends must be sealed water tight at all times to prevent freezing damage. Support stored units at points as required by manufacturer.

B. Examine roughing-in for equipment support, anchor-bolt sizes and locations, piping, and electrical connections to verify actual locations, sizes, and other conditions affecting equipment performance, maintenance, and operations. Proceed with installation only after unsatisfactory conditions have been corrected.

3.2 INSTALLATION

A. Do not lift heat exchanger by nozzle connections.

B. Install in strict compliance with manufacturer's installation instructions and Related Sections. Maintain manufacturer's recommended clearances for service and maintenance.

C. Support piping connecting to the heat exchanger fully independent of the heat exchanger connections.

D. Install isolation valves, pressure gauges and thermometers in piping at each nozzle connection. Install air vents in piping at each top nozzle connection and drains on the bottom connections.

E. Install insulation after all pressure testing is complete.

F. During system cleaning and flushing, protect the heat exchanger as described in Related Sections.

3.3 TEMPORARY SERVICE

A. Start units for temporary use only with the expressed written permission of the Project Manager and in compliance with the requirements of the Contract Documents.

B. Units shall not be put into temporary service prior to the entire chilled water and condenser water system being flushed and cleaned per Related Section, and after such flushing and cleaning is approved by the Commissioning Authority.

C. Prior to placement into temporary service perform manufacturer's pre-start protocols.

D. Commission equipment prior to putting into temporary service to the extent required by the Commissioning Authority. Re-perform all commissioning activities prior to Owner acceptance, even if previously commissioned to prepare for temporary service.

3.4 COMMISSIONING

A. Perform commissioning activities in accordance with Related Sections.

END OF SECTION 235719

UNIVERSITY OF MICHIGAN
ARCHITECTURE, ENGINEERING AND CONSTRUCTION

ARCHITECTURE & ENGINEERING
326 East Hoover, Mail Stop B
Ann Arbor, MI 48109-1002
Phone: 734-764-3414
Fax: 734-936-3334

BuildingName
The Description of the Project
P00000000 0000

SPECIFICATION DIVISION 23

NUMBER SECTION DESCRIPTION

DIVISION 23 HEATING, VENTILATING AND AIR CONDITIONING (HVAC)
SECTION 236416 – CENTRIFUGAL WATER CHILLERS

END OF CONTENTS TABLE

MPLE ECONOMIC ANALYSIS FOR DESIGNERS USE AND/OR TO BE COMPLETED BY BIDDERS IS AVAILABLE FOR THIS SPECIFICATION SECTION; SEE THE "STANDARD DETAILS" SECTION OF THE U-M A.E.C. WEBSITE: WWW.UMAEC.UMICH.EDU. AN ECONOMIC ANALYSIS SHOULD TYPICALLY BE PERFORMED TO COMPARE CHILLER ALTERNATIVES.

REVISED FORMAT AND CONTENT 04/2011 D. KARLE AND M. PLATT.

CHANGED TO INDICATE LINE REACTORS CAN BE USED ON VSD PROVIDED THEY ARE NOT MOUNTED EXTERNAL TO THE DRIVE. D. KARLE/K. BIRRINGER 2-7-12.

DIVISION 23 HEATING, VENTILATING AND AIR CONDITIONING (HVAC)
SECTION 236416 – CENTRIFUGAL WATER CHILLERS

PART 1 - GENERAL

1.1 RELATED DOCUMENTS

INCLUDE PARAGRAPH 1.1.A AND B IN EVERY SPECIFICATION SECTION. EDIT RELATED SECTIONS 1.1.B TO MAKE IT PROJECT SPECIFIC.

A. Drawings and general provisions of the Contract, Standard General and Supplementary General Conditions, Division 1 Specification Sections, and other applicable Specification Sections including the Related Sections listed below, apply to this Section.

B. Related Sections:

1. Section 220548: Vibration Control
2. Section 019100/019110: Commissioning
3. Division 26: Electrical

1.2 SUMMARY

A. Section Includes

1. Centrifugal chiller(s), both semi-hermetic and open drive types.
2. Centrifugal chiller installation, testing, commissioning, and start-up services.

TURN ON HIDDEN TEXT AND MAKE THE BELOW PARAGRAPH PROJECT SPECIFIC, IF IT APPLIES TO THE PROJECT.

B. The chiller(s) will be prepurchased and assigned to the contractor for installation. Except as otherwise indicated, chiller manufacturer/vendor is responsible for items listed in PART 1 and Part 2 of this specification, installing contractor is responsible for items listed in PART 3.

THE BELOW ARTICLE (IN HIDDEN TEXT) CONTAINS SAMPLE LANGUAGE FOR CHILLER ALTERNATES. PARAGRAPH "A" IS TYPICALLY USED ONLY IF THE CHILLER IS BEING PREPURCHASED. PARAGRAPH "B" IS USED TO SOLICIT ALTERNATIVE CHILLER SELECTIONS FOR TOTAL COST OF OWNERSHIP (TCO) EVALUATIONS. ONE MEANS OF SOLICITING TCO OPTIONS IS BY PREPURCHASING THE CHILLER(S); THERE ARE OTHER METHODS. THIS ARTICLE COULD ALSO BE USED TO DESCRIBE OTHER ALTERNATES BEING SOLICITED. EDIT THE ARTICLE TO MAKE IT PROJECT SPECIFIC, OR DELETE.

1.3 ALTERNATES

A. Manufacturers are encouraged to submit deduct alternates for early payment.

B. In addition to submitting a base bid proposal that complies with this specification and the scheduled performance data, manufacturers are encouraged to submit alternate chiller selections that provide best value/lowest total cost of ownership to the University. Clearly identify each alternate proposal, and highlight how it differs from base bid requirements. Alternative selections should typically be chillers that provide the scheduled capacity but with improved energy performance, while otherwise fully complying to this specification. For each alternative proposed, provide complete submittal data.

EDIT SUBMITTAL PARAGRAPHS ACCORDING TO BASE BID AND ALTERNATE CONDITIONS.

1.4 SUBMITTALS:

A. Provide product data as follows:

1. Rated capacity, weight with and without refrigerant charge, furnished specialties and accessories.
2. Manufacturer's assembly type shop drawings indicating dimensions, required clearances; pipe connection types, locations and sizes; component assembly methods, support and vibration isolator details, marine water box details, and location and size of all field connections.
3. Impeller speed (RPM), number of bearings, type of bearings, high speed impeller shaft RPM, number of stages, number of sets of inlet guide vanes, type and amount of refrigerant charge (in pounds), and amount of oil required.
4. "A"-weighted sound pressure level and octave band sound pressure levels in accordance with AHRI Standard 575. Provide sound data in the format recommended by the AHRI Standard 575 Appendix D and E.
5. Manufacturer's wiring diagrams for interlock and control wiring, clearly identifying required field wiring.
6. AHRI-550/590 certified computerized selections, adjusted for zero capacity and zero NPLV tolerance. Provide capacity and NPLV performance selections at 100/75/50/25 percent load, with a condenser water temperature of 85˚F at 100 percent load; 75˚F at 75 percent; 65˚F at 50 percent, and 65˚F at 25 percent load; at the specified evaporator leaving water temperature and condenser/evaporator water flow rates and fouling factor allowances. Provide complete performance data at all selection points, to include all data required by AHRI-550/590 Minimum Data Requirements for Published Ratings.

STRIKE THE BELOW PARAGRAPH WHEN AN ECONOMIC ANALYSIS TABLE IS NOT BEING REQUESTED. IF SUCH A TABLE IS BEING REQUESTED, INCLUDE THE BLANK TABLE ON THE DRAWINGS OR AS A PART OF THIS SPECIFICATION.

7. Manufacturer shall complete and submit one Chiller Economic Analysis Table form for each base and alternate selection.
8. For open motors, provide curve showing motor heat loss versus chiller load.
9. Shipping, handling, and storage instructions.
10. Installation and start-up instructions.

11. Project specific maintenance and operating data, and recommended spare parts list.
12. Certification of compliance with ASME, UL, & ASHRAE fabrication requirements, specified elsewhere in these specifications.
13. Certified factory test results as specified in Part 2.
14. Confirmation that Coefficient of Performance (COP) for centrifugal chiller is not less than prescribed by ASHRAE 90.1.
15. Reports specified in Part 3.

1.5 QUALITY ASSURANCE:

A. Manufacturers and Products: The products and manufacturers specified in this Section establish the standard of quality for the Work. Subject to compliance with all requirements, provide specified products from the manufacturers named in Part 2.

B. Reference Standards: Products in this section shall be built, tested, and installed in compliance with the following quality assurance standards; latest editions, unless noted otherwise.

C. UL, CSA, ETL, or MET label for chiller electrical requirements.

D. ANSI/ASME SEC VIII Div. 1 Boiler and Pressure Vessel Code for construction and testing.

E. NFPA 70/NEC 2005

F. ANSI/NEMA 250 Enclosures for Electrical Equipment (1000 volts maximum).

G. ANSI/NEMA MG 1 Motors and Generators.

H. ANSI/ASHRAE 15 Safety Code for Mechanical Refrigeration.

I. ASHRAE 90.1-2007 Energy Standards for Low Rise Buildings Except Low Rise Residential Buildings

J. ANSI/AHRI: Standard 550/590 Performance Rating of Water Chilling Packages Using the Vapor Compression Cycle.

K. ANSI/AHRI 575 Method of Measuring Machinery Sound Within an Equipment Space

L. ANSI/AHRI 580 Non-Condensable Gas Purge Equipment For Use With Low Pressure Centrifugal Liquid Chillers

M. ASTM C 534 Specification for Preformed Elastomeric Cellular Thermal Insulation in Sheet and Tubular Form.

IF THE CHILLER MUST BE DISASSEMBLED TO BE SET IN PLACE, PROVIDE INFORMATION ON THE DRAWINGS AND OTHER CONTRACT DOCUMENTS DESCRIBING DISASSEMBLY/REASSEMBLY REQUIREMENTS.

1.6 DELIVERY, STORAGE, AND HANDLING:

A. Ship the chiller with weather-protected wrap for storage outdoors. Protect control panels, pipe openings, and other sensitive components with heavy plastic or other durable means to ensure unit cleanliness is maintained during shipping and storage.

B. Provide rigging and installation instructions in advance to allow for planning.

TURN ON HIDDEN TEXT AND MAKE THE BELOW PARAGRAPH PROJECT SPECIFIC, IF IT APPLIES TO THE PROJECT. SEE RELATED PART 3 ARTICLE.

C. The chiller will require disassembly and reassembly to allow movement into final location. The chiller manufacturer shall provide all labor and supervision to disassemble and reassemble the chiller, including any rigging required for these operations. The installing contractor shall provide all rigging to move the chiller to the point of final assembly. The chiller manufacturer shall assemble the unit complete with holding charge, ready for piping and electrical connections.

1.7 WARRANTY

A. Provide a complete parts and labor warranty for a minimum of 1 year from the date of Substantial Completion. Warranty coverage shall include loss of refrigerant.

PART 2 - PRODUCTS

2.1 MANUFACTURERS

A. Acceptable Manufacturers:

1. York International by Johnson Controls
2. Trane Co.

2.2 CENTRIFUGAL PACKAGED CHILLER

A. Provide factory assembled, factory-tested, packaged, water cooled, centrifugal liquid chiller consisting of compressor, starter or variable speed drive as indicated, condenser, evaporator, built in purge system, refrigeration accessories, lifting lugs for servicing and installation, and factory-mounted instrument/direct digital control panel.

B. Provide chillers with complete oil and refrigerant charge.

C. Provide chiller vibration isolation.

D. All components listed above shall be provided by the chiller manufacturer.

2.3 PERFORMANCE REQUIREMENTS

A. Refer to schedules on Drawings for fundamental performance requirements. Also comply with the performance requirements specified in this Section.

1. Fouling Factor Allowance:
   a. Evaporator tubes: 0.00010 $h \cdot ft^2 \cdot °F/Btu$
   b. Condenser tubes: 0.00025 $h \cdot ft^2 \cdot °F/Btu$

DO NOT MODIFY TERMINOLOGY (E.G."NET REFRIGERATION CAPACITY") IN BELOW PARAGRAPH, INCLUDING CAPITALIZATION OF WORDS. THESE TERMS MATCH DEFINITIONS IN AHRI 550/590.

B. Rated in compliance with AHRI-550/590, zero Net Refrigeration Capacity, zero Total Power Input, and zero Energy Efficiency (kW/ton) tolerance.

C. All chiller selections shall be capable of unloading to 15 percent of design tonnage at 85°F entering condenser water temperature while maintaining surge-free, stable operation.

D. Maximum self-excited vibration velocity at compressor and motor bearings in the vertical, horizontal and axial directions shall not exceed, in any direction, 0.19 inches per second RMS over the entire chiller operating range.

2.4 COMPRESSOR

A. Single or multiple stage compressor, inlet guide vanes or multi stage capacity control guide vanes, shrouded aluminum alloy impellers designed and assembled for no critical speeds within operating range.

B. The compressor shall be dynamically balanced and overspeed tested to 120 percent of design speed.

2.5 EVAPORATOR AND CONDENSER

A. Carbon steel plate shells with carbon steel tube sheets and intermediate tube support sheets as required to prevent tube vibration and to allow replacement from either end of heat exchangers. Provide suitable baffles or distributing plates in condenser tubes to distribute refrigerant discharge gas on tubes evenly. Test refrigerant side under vacuum and test water side at minimum 225 psig.

B. Tubes shall be seamless copper internally and externally enhanced, individually cleanable and replaceable. Tubes shall be minimum 0.025 inches wall thickness and provide 0.050 inches tube wall thickness at the plain lands contacting the intermediate tube supports and end sheets. Expand ends of tubes in tube sheets with intermediate tube support for tight fit.

C. Evaporator and condenser water boxes shall be marine type (unless otherwise indicated)of fabricated steel with integral water connections bolted to shell of vessel, with vent and drain connections and hinged water box covers on both ends of the condenser and evaporator. Provide water piping stub outs with welded flanges for flanged connections.

D. Units with multi-stage compressors shall incorporate an inter-stage flash vessel "economizer." Units with single stage compressor shall have the condenser circuited for liquid sub-cooling and be provided with a thermometer well to monitor the amount of sub-cooling.

E. Provide service valves and other factory-installed accessories required to facilitate transfer of refrigerant from chiller shell to chiller shell or from chiller to a remote refrigerant storage/recycling system and to sense refrigerant pressure or temperature.

2.6 COMPRESSOR CASING AND SHELL FINISHES

A. Casing shall be fine grain cast iron with gasket sealed joints.

B. Factory applied paint, all exposed ferrous metal surfaces on assembled chiller. Minimum one coat of primer, minimum 2 mils dry film thickness (DFT). Final finish with two coats of air dried or baked alkyd enamel metal coating, minimum 4 mils total DFT. Two coats of matching, insulation compatible paint on all factory installed insulation.

C. Factory applied insulation. 3/4 inch minimum thickness for the evaporator water box, compressor motor, motor barrel, suction elbow and suction cover, 3/8 inch minimum thickness on economizer, 1/2 inch thick pipe insulation on liquid lines and all cold surfaces of chiller capable of forming condensation.

D. Insulation: Flexible, closed cell elastomeric insulation, meeting requirements of ASTM C534, conductivity of 0.30, water vapor permeability of 0.20. Materials shall have a flame spread index of less than 25 and a smoke-developed index of less than 50 when tested in accordance with ASTM E 84, latest revision.

E. Before insulating steel surfaces, prepare surfaces for paint and prime and paint as indicated for other painted components.

F. Seal seams and joints to provide a vapor barrier.

G. Acceptable product and manufacturer:

1. AP Armaflex by Armacell LLC, or equivalent.

2.7 COMPRESSOR LUBRICATION SYSTEM

A. Submerged pump and replaceable oil filter; complete with automatic oil heater designed to separate refrigerant from oil, site glass and oil cooler. System shall provide positive pressure lubrication of journals, bearing, and seals (if any), during start-up, operation and coast-down of chiller, including power interruptions.

2.8 PRESSURE RELIEF DEVICES

A. Comply with ASHRAE 15; provide rupture disc(s) or pressure relief device(s).

B. Additionally provide spring-loaded relief valve (s) (Trane Rupture-guard or York Vent-guard) to help contain refrigerant charge after an over-pressure event.

2.9 PURGE SYSTEM (R123 SYSTEMS ONLY)

A. Rated, tested, marking and nameplate data; meeting all conformance requirements of AHRI 580. To include purge tank with dryer elements and 115v/60/1 pump out compressor. Rated for no more than 0.0049 lb. of refrigerant per 1 lb. non-condensable at standard room conditions with condensing refrigerant temperatures greater than 80°F.

2.10 REFRIGERANT FLOW CONTROL DEVICES

A. Provide refrigerant flow control devices between evaporator and condenser (and as required elsewhere) to regulate refrigerant flow at volume and pressure required to maintain evaporator liquid refrigerant level sufficient to keep evaporator tubes adequately wetted through full range of chiller operation.

CHILLERS THAT ARE LOCATED ON SLAB ON GRADE DO NOT TYPICALLY REQUIRE SPRING ISOLATORS TO CONTROL VIBRATION TRANSMISSION TO THE BUILDING STRUCTURE. CONSULT WITH STRUCTURAL ENGINEER/VIBRATION CONSULTANT TO DETERMINE VIBRATION ISOLATION SYSTEM THAT IS REQUIRED. EDIT BELOW ARTICLE ACCORDING TO REQUIRED VIBRATION ISOLATION SYSTEM. BE SURE TO INDICATE ANY SUPPLEMENTAL STEEL REQUIREMENTS ON THE DRAWINGS AND TO INCLUDE THE VIBRATION CONTROL SPECIFICATION IF VIBRATION ISOLATION IS REQUIRED.

2.11 VIBRATION ISOLATION

A. Chiller manufacturer shall furnish vibration isolators of the type and performance specified in Related Section "Vibration Control." Quantity, location, attachment method, and compatibility with the specific chiller provided shall be the responsibility of the chiller manufacturer.

B. Spring isolators shall be of the low profile "height saving" arrangement designed to minimize chiller height above finished floor.

C. When no vibration isolation is specified, provide neoprene pad isolators.

2.12 COMPRESSOR MOTOR AND ACCESSORIES

A. Continuous duty, squirrel cage, induction type, either hermetically sealed, refrigerant cooled or open drive/open drip proof, rated for operation at 460 volts, 3 phase, 60 Hz. Full load operation of the motor shall not exceed nameplate full load current rating or enter into the service factor. The first critical speed shall be above the operating speed. Provide for removal of the stator without breaking the main refrigerant piping connections. Provide RTD's or thermistors, one per phase, to monitor motor winding temperature.

B. Motors used with variable frequency drives shall be rated inverter duty and comply with NEMA MG-1 Part 31, with minimum insulation Class F and insulation temperature rise rating of Class B.

SELECT STARTER TYPE OR VARIABLE SPEED DRIVE FROM THE THREE SECTIONS BELOW. DELETE THE OTHER TWO SECTIONS. CONSULT WITH ELECTRICAL ENGINEER AND U-M DESIGN MANAGER TO DETERMINED WHICH STARTER TYPE OR IF A VSD IS APPROPRIATE FOR THE PROJECT. VARIABLE SPEED DRIVES ARE NORMALLY INSTALLED TO IMPROVE PART-LOAD EFFICIENCY. HIGH MAINTENANCE COST OF VSD'S HAS REOPENED THE ARGUMENT FOR CONSIDERING A STARTER IN LIEU OF VSD, ESPECIALLY IN MULTIPLE CHILLER PLANTS.

2.13 WYE DELTA STARTER

A. Unit mounted and pre-wired, wye-delta, closed-transition, reduced voltage type motor starter mounted in a NEMA 1 enclosure. The enclosure shall include a lockable hinged door with locking type retaining latches able to receive a padlock, and shall be UL labeled 508 compliant. Starter shall include a prewired pilot relay to initiate start sequence from the chiller controller, 4 contactors, motor overload protection and a 3 phase starting resistor/reactor bank.

B. The startup current draw shall be limited to 33 percent of locked rotor amps (LRA) for an adjustable time of 2 to 15 seconds minimum.

CONTACT ELECTRICAL ENGINEER AND SPECIFY BELOW THE SHORT CIRCUIT RATING REQUIRED FOR YOUR SPECIFIC PROJECT.

C. Starter shall have a 100,000 AIC short circuit withstand rating.

D. Provide 120 volt control power transformers to power chiller controller, purge system, oil system, and all other auxiliary equipment and controls.

E. The following motor protection features shall be integrated with the chiller controller:

1. Current phase loss
2. Current phase unbalance
3. Current phase reversal
4. Excessive acceleration time
5. Incomplete starting sequence
6. Over/Under line voltage
7. Motor current overload during start up and running
8. Momentary power loss protection with auto restart
9. Starter contactor fault protection
10. Starter transition failure

2.14 SOLID STATE STARTER

A. Unit mounted and pre-wired solid state type motor starter utilizing silicon controlled rectifiers, mounted in a NEMA 1 enclosure. The enclosure shall include a lockable hinged door with locking type retaining latches able to receive a padlock, and shall be UL labeled 508 compliant. Starter shall include a two-wire control input to initiate start sequence from the chiller controller.

B. The starter mode shall be closed loop, current limit control and shall provide a smooth acceleration of the motor without current transitions or transients. The following shall be user programmable:

1. Acceleration ramp time, 1 to 30 seconds minimum adjustment range.
2. Motor start current.
3. The starter shall provide transient voltage protection to the SCR's through RC snubbers and MOV's connected line-to-line and line-to-ground. High heat sink temperature protection shall also be provided

CONTACT ELECTRICAL ENGINEER AND SPECIFY BELOW THE SHORT CIRCUIT RATING REQUIRED FOR YOUR SPECIFIC PROJECT

C. Starter shall have a 100,000 AIC short circuit withstand rating.

D. Provide 120 volt control power transformers to power chiller controller, purge system, oil system, and all other auxiliary equipment and controls

E. Provide the following motor protection features:

1. Current phase loss
2. Current phase unbalance
3. Current phase reversal
4. Excessive acceleration time
5. Over/Under line voltage
6. Motor current overload during start up and running
7. Momentary power loss protection with auto restart

2.15 VARIABLE SPEED DRIVE

A. Unit mounted and pre-wired variable speed drive to adjust compressor motor speed automatically in conjunction with compressor vane position, to maximize part load efficiency. Drive shall be mounted in a NEMA 1 enclosure and UL labeled 508C

B. PWM type, utilizing IGBT’s with a power factor of 0.96 or higher at all loads and speeds.

C. Drive efficiency shall be 97 percent or higher at full load and full speed.

CONTACT ELECTRICAL ENGINEER AND SPECIFY BELOW THE SHORT CIRCUIT RATING REQUIRED FOR YOUR SPECIFIC PROJECT

D. Drive shall have a 65,000 AIC short circuit withstand rating.

E. Drive shall be insensitive to incoming power phase rotation and shall be capable of auto restart after a momentary power loss.

F. Provide 120 volt control power transformers to power chiller controller, purge system, oil system, and all other auxiliary equipment and controls

G. Variable speed drive shall include the following features:

1. Over-voltage and-under voltage protection; 3-phase sensing motor over-current protection, single phase protection, and over temperature protection

2. Digital readout at the chiller controller of output frequency, input voltage, 3-phase output current, input kilowatts, and self-diagnostic service parameters. Separate meters for this information will not be acceptable.
3. kW Meter - The unit's input power consumption shall be measured and displayed digitally via the chiller controller. The kW meter accuracy shall be +/- 3 percent of reading.
4. Ammeter – Simultaneous three-phase true RMS digital readout via the chiller controller. Three current transformers shall provide isolated sensing. The ammeter accuracy shall be plus or minus 3 percent of reading.
5. Voltmeter – Simultaneous three-phase true RMS digital readout via the chiller controller. The voltmeter accuracy shall be plus or minus 3 percent of reading.
6. Elapsed Time Meter – Digital readout of the unit's elapsed running time (0 - 876,600 hours, resettable) shall be displayed via the chiller controller.

HOSPITAL PROJECTS MAY REQUIRE AN "IEEE 519" STUDY THAT ADDRESSES HARMONIC CONCERNS RELATED TO THE ELECTRICAL SYSTEM AS A WHOLE (NOT JUST HARMONIC CONCERNS THAT ARE SPECIFIC TO ANY PARTICULAR PIECE OF EQUIPMENT). AE SHALL DISCUSS THIS POSSIBLE REQUIREMENT WITH THE HOSPITAL'S ASSIGNED DESIGN MANAGER.

H. At any VSD operating speed from 20% to 100%, current total harmonic distortion (THD) shall not exceed 100% of the VSD input current waveform, and voltage THD shall not exceed 3% of the VSD input voltage waveform, both as measured at the drive's incoming power connection lugs. Provide UL listed harmonic filter or power conditioner if required to guarantee these limits. Line reactors mounted external to the drive shall not be used. Filter/conditioner shall be unit mounted on the chiller. Manufacturer shall provide all wiring and conduit between filter, variable speed drive and motor.

2.16 CHILLER DISCONNECT SWITCH

THE ELEVATION OF THE DISCONNECT SWITCH INDICATED BELOW IS EXACTLY PER NATIONAL ELECTRIC CODE REQUIREMENTS AND WILL BE STRICTLY ENFORCED BY THE U-M INSPECTION DEPARTMENT. DURING DESIGN, VERIFY WHAT DISCONNECT HEIGHT IS AVAILABLE AS STANDARD WITH CHLR. MFR. AND MAKE DESIGN PROVISIONS ACCORDINGLY. FOR EXAMPLE, AN ELEVATED SERVICE PLATFORM MAY BE REQUIRED.

A. Provide a factory-mounted, prewired, NEMA heavy-duty rated, fused disconnect switch with the starter. The disconnect switch shall be lockable in the "off" position and shall serve as the single point of power connection to the chiller.

B. Configure the disconnect switch for top or side conduit entry. Provide line side lugs of the long barrel, two hole, compression type. Mechanical lugs are not acceptable.

C. Mount the disconnect switch to comply with NEC requirements. The distance from the finished floor to the center of disconnect handle grip in its highest position shall not exceed 6 feet 7 inches, inclusive of housekeeping pad and vibration isolator heights.

2.17 CHILLER CONTROLLER

A. Unit mounted pre-wired chiller controller mounted in a NEMA 1 enclosure, labeled by UL, CSA, ETL or MET. All external factory wiring shall be installed to minimize potential damage, and all power wiring, 110V and higher, shall be in a NEC compliant conduit system. Controller shall include an adjustable mounting system such that center of panel may be set at a maximum of 6 feet 6 inches above the finished floor, inclusive of housekeeping pad and vibration isolator heights.

B. The chiller controller shall automatically adjust compressor pre-rotation vane position, variable speed drive when provided, and other chiller systems to maximize part-load efficiency and to provide capacity control.

1. Capacity modulation shall be maintained within plus or minus 0.5°F of CHW set point, at entering condenser water temperatures as low as 65°F from full load to 15 percent load, without overshoot, hunting, surging, or cycling the machine off.

C. Provide the chiller controller with the required hardware and software for the following functions.

1. Safeties:
   a. Compressor starter failure detection
   b. Compressor start up, shut down sequences
   c. High compressor discharge temperature
   d. Surge detection and protection
   e. High lubricating oil temperature
   f. Low lubricating oil pressure
   g. High bearing temperature
   h. Evaporator and or condenser loss of flow
   i. High condenser pressure limit and high pressure cut out
   j. Evaporator low refrigerant temperature limit
   k. Low evaporator leaving fluid cut out
   l. Motor current limit, motor current overload
   m. High motor winding temperatures
   n. High vacuum operation limit
   o. Power loss, phase unbalance, phase loss, reverse rotation
   p. Over/under voltage
   q. Short cycling protection
2. Front panel display in clear English language and inch/pound units of the following:
   a. Operating mode run status
   b. Set point source or reset source
   c. Password protection security
   d. Evaporator freeze protection and low limit control data
   e. Evaporator leaving fluid set point
   f. Evaporator and condenser flow proof

g. Calculated chiller capacity (tons)
h. Compressor discharge temperature
i. Chiller starts and run-time counter
j. Entering and leaving evaporator water temperature
k. Entering and leaving condenser water temperature
l. Saturated condenser temperature and pressure
m. Saturated evaporator temperature and pressure
n. Bearing or bearing oil temperatures
o. Lubricating oil temperature and pressure
p. Current limit or demand limit
q. Phase voltage and current
r. Motor winding temperature
s. Power demand (kW) and power factor
t. Purge compressor suction temperature (R123 machines only)
u. Purge pump out rate (R123 machines only)
v. Purge pump out time last or current cycle (R123 machines only)
w. Total purge pump out time (R123 machines only)
x. Total purge run time (R123 machines only)

3. DDC Control Inputs:
   a. Remote Start/Stop
   b. Chilled water temperature set point reset
4. Binary Outputs:
   a. Evaporator Pump Relay
   b. Condenser Pump relay
   c. Chiller Running Relay
   d. Alarm Relay (manual reset required)

D. The controller shall provide an output signal to the Owner's DDC system for controlling condenser water temperature to maximize chiller operating efficiency while maintaining proper refrigerant head pressure at all times. Provide in the chiller controller a 4 to 20 mA or 0 to 10 volt output signal to allow Owner's DDC system to reset condenser water temperature via cooling tower fan speed control and tower bypass valve modulation while maintaining proper chiller refrigerant head pressure.

E. Provide an ON-OFF-AUTO rocker switch on the front of the controller panel to allow local control or remote control of the start/stop function by Owner's DDC system. When switch is set to ON or OFF positions, the remote start or stop signal from the Owner's DDC shall be ignored. If turning the chiller on or off at the chiller control panel interface accomplishes the same thing, an ON-OFF-AUTO rocker switch is not required.

F. Provide factory installed and pre-wired proof-of-flow switches that confirm flow thorough the evaporator and condenser to the chiller control panel. Alternatively, provide United Electric Model J21K-14829 differential pressure switches for field installation to prove evaporator and condenser water flows.

THE BELOW ARTICLE (IN HIDDEN TEXT) CONTAINS SAMPLE LANGUAGE FOR VARIABLE PRIMARY FLOW (VPF) CONTROL. THE ADDITIONAL FEATURES TO PROVIDE ACCURATE CONTROL ON VPF SYSTEMS IS AN OPTION ON CHILLERS AS OF MARCH 2011.

G. Variable Primary (Evaporator) Flow Compensation

1. The controller shall provide accurate and stable response to changes in evaporator water flow rate. The control algorithm shall automatically adjust the control gain (and/or other control parameters) to maintain leaving chilled water temperature within +/- 0.5°F of set point at flow rate variations up to 25% change per minute, and within +/- 2°F of set point at flow rate variations up to 50% per minute.
2. Include factory mounted transducers to read differential evaporator water pressure and differential condenser water pressure, and any other necessary parameter.
3. The controller shall display the following additional data:
   a. Evaporator differential pressure
   b. Condenser differential pressure
   c. Evaporator water flow rate
   d. Condenser water flow rate
   e. Evaporator capacity (tons)

IF THE PROJECT INVOLVES THE PURCHASE OF MULTIPLE CHILLERS OF THE SAME TYPE AND SIZE, CONSIDER REVISING THE BELOW TO ONLY REQUIRE A FACTORY TEST ON ONE OF EACH TYPE AND SIZE.

2.18 SOURCE QUALITY CONTROL

A. Chiller shall be factory performance tested in an AHRI certified test facility per AHRI standard 550/590. Factory test instrumentation calibration shall be traceable to the National Institute of Standards And Technology.

1. Chiller shall be tested at the following load/condenser water temperature conditions, at the specified evaporator leaving water temperature and condenser/evaporator water flow rates and fouling factor allowances:
   a. No Chiller Economic Analysis Table Requested: 100 percent/85°F, 75 percent/75°F, 50 percent /65°F, 25 percent /65°F, 15 percent/85°F.
   b. Chiller Economic Analysis Table Requested: At any four loads and conditions indicated in the table, as selected by the Owner, and at 15 percent/85°F.

B. Factory vibration test to demonstrate compliance to vibration performance requirements.

C. The Owner's Representative shall be allowed to witness the factory testing. An officer of the manufacturer's company shall certify by signature that the factory tests were performed as specified, the report accurately reflects the test results, and that the chiller met or exceeded all performance requirements. The report shall clearly identify any performance requirements that were not achieved.

DO NOT MODIFY TERMINOLOGY (E.G."NET REFRIGERATION CAPACITY") IN BELOW PARAGRAPH, INCLUDING CAPITALIZATION OF WORDS. THESE TERMS MATCH DEFINITIONS IN AHRI 550/590

D. The equipment will be accepted by the Owner if the manufacturer's certified test results are provided and the equipment met or exceeded all performance requirements (zero Net Refrigeration Capacity, zero Total Power Input, and zero Energy Efficiency (kW/ton) tolerance).

PART 3 - EXECUTION

3.1 EXAMINATION, STORAGE, AND PREPARATION

A. Upon delivery, validate holding charge and that integrity of the delivery protection has been maintained, the chiller is undamaged, and all accessory parts were delivered. Reject damaged chillers. Verify that center of disconnect and chiller control panel height will be a maximum of 6 feet 7 inches above the finished floor, inclusive of housekeeping pad and vibration isolator heights. Restore protection. Provide a delivery report indicating chiller condition to the Owner's Representative.

B. Rig units off delivery trucks. Comply with Manufacturer's rigging instructions.

C. Move all refrigerant or oil supplied by the manufacturer to a location next to the chiller and contact the Owner's Representative to inform them of the amount and type of refrigerant and oil delivered.

D. Store units protected from weather, dirt, water, construction debris, and physical damage. Support stored units at points as required by manufacturer.

E. Verify during storage that unit refrigerant or nitrogen holding charge levels are being maintained. Record the charge pressure and ambient temperature weekly and provide report to Owner's Representative. Take immediate action under the supervision of the manufacturer to restore any significant reduction in charge pressure level.

F. Examine chillers before installation. Validate holding charge has been maintained and that the chiller is undamaged. Provide a pre-installation report indicating chiller condition to the Owner's Representative.

G. Examine roughing-in for equipment support, anchor-bolt sizes and locations, piping, and electrical connections to verify actual locations, sizes, and other conditions affecting chiller performance, maintenance, and operations before equipment installation.

1. Final chiller locations indicated on Drawings are approximate. Determine exact locations before roughing-in for piping and electrical connections.

H. Rig units into final locations. Comply with Manufacturer's rigging instructions. Conduct a pre-installation conference to review rigging and installation requirements with all parties involved.

TURN ON HIDDEN TEXT AND MAKE THE BELOW ARTICLE PROJECT SPECIFIC, IF IT APPLIES TO THE PROJECT.

3.2 CHILLER ASSEMBLY

A. The chiller will require disassembly and reassembly to allow movement into final location. The chiller manufacturer shall provide all labor and supervision to disassemble and reassemble the chiller, including any rigging required for these operations. The installing contractor shall provide all rigging to move the chiller to the point of final assembly. The chiller manufacturer shall assemble the unit complete with holding charge, ready for piping and electrical connections.

3.3 CHILLER INSTALLATION

A. Install the chiller in strict compliance with manufacturer's installation instructions and Related Sections. Maintain manufacturer's recommended clearances for service and maintenance.

B. Install chiller on support structure or concrete base as indicated. Install the specified vibration isolation, furnished by the chiller manufacturer, in strict compliance with chiller manufacturer’s directions.

C. Provide connection-size ball valves with threaded hose end connections at all water vent and drain connections on the evaporator and condenser, whether indicated on Drawing details or not.

D. Install relief vent piping in strict accordance with chiller manufacturer's recommendations.

E. Adjust chiller control panel so that center of panel is set at maximum of 6 feet 7 inches above finished floor, inclusive of housekeeping pad and vibration isolator heights.

F. Install separate devices furnished by manufacturer and not factory installed.

G. Repair all damaged insulation to factory equivalent.

H. Repair scratches to factory equivalent finish, using chiller manufacturer provided paint.

I. Complete the manufacturer’s pre-start checklist and submit it for scheduling of the manufacturer’s field startup technician.

3.4 COMMISSIONING

A. Perform the commissioning activities as outlined in Related Section “Commissioning” and other requirements of the Contract Documents.

3.5 SYSTEM STARTUP

A. Manufacturer shall provide a factory-trained representative for the time required to complete start-up, commissioning, and testing each chiller. This service shall be provided on days and at times required to meet the construction schedule and/or project phasing requirements, at the complete discretion of the Owner's representative, without additional charges. There shall be no time limit on this service, but shall be the time required to bring the unit to proper operation. This service must include all necessary written and verbal instructions to U of M operating personnel. The manufacturer's factory-trained representative shall:

1. Verify correct installation and organize, instruct and assist the mechanical contractor's personnel in start-up procedures.
2. Fill chiller with oil if not factory installed, and charge the chiller with refrigerant.
3. Verify all pre-start checks. Start-up the chiller, set controller parameters, make field adjustments, refrigerant balance the chiller, verify proper chiller operation. Assist Owners personnel with proper set-up of remote control operation of the chiller. Provide a written report after each visit, prior to leaving.
4. Participate in the commissioning of the chiller to the extent required by the project Commissioner.

B. If the initial start-up and machine trim is accomplished under chiller load condition of less than 100 percent load, the manufacturer's representative shall return to the job site and re-adjust the machine during 100 percent load conditions at no additional cost.

C. The manufacturer representative's written report shall include complete data on all services provided, and document all programmed settings as well as the amount of refrigerant and other fluids installed, both from the factory and in the field during startup.

3.6 OWNER TRAINING

A. Manufacturer's factory-trained representative shall train Owner's maintenance personnel on start-up and shutdown procedures, trouble-shooting, vibration test locations, service schedules, and preventative maintenance procedures, minimum of 8 hours. Review with Owner's personnel, the data contained in the Operating and Maintenance Manuals.

B. Schedule training with Owner through the Architect/Engineer with at least 7 days prior notice. Training and start up services are separate functions and training shall not be combined with startup services.

3.7 FIELD QUALITY CONTROL

A. Chiller manufacturer shall perform vibration testing. Measure at compressor and motor bearings in the vertical, horizontal and axial directions, to demonstrate compliance with Part 2 vibration performance requirements. Permanently label the location where each vibration measurement was taken with a unique identification number.

B. Provide report to owner within 1 week of testing. Include diagram of chiller with measurement points labeled to match field labels.

C. The Chiller manufacturer shall make corrections and retest if it is determined the cause of excess vibration is due to defective equipment. The Installing contractor shall make corrections and pay for a chiller mfr. retest if it is determined the cause of excess vibration is improper installation.

END OF SECTION 236416

UNIVERSITY OF MICHIGAN
ARCHITECTURE, ENGINEERING AND CONSTRUCTION

ARCHITECTURE & ENGINEERING
326 East Hoover, Mail Stop B
Ann Arbor, MI 48109-1002
Phone: 734-764-3414
Fax: 734-936-3334

BuildingName
The Description of the Project
P00000000 0000

SPECIFICATION DIVISION 23

NUMBER SECTION DESCRIPTION

DIVISION 23 HEATING, VENTILATING AND AIR CONDITIONING (HVAC)
SECTION 236500 - COOLING TOWERS

END OF CONTENTS TABLE

DIVISION 23 HEATING, VENTILATING AND AIR CONDITIONING (HVAC)
SECTION 236500 - COOLING TOWERS

REVISIONS:
3-31-04: SUBSTANTIALLY REVISED AND POSTED TO WEB.
04-10-08: HYDRONICS MECH TECH GROUP REVISIONS: ADDED TOWER TECH AND EVAPCO. BOTH PRODUCTS ARE UNDER CONSIDERATION AND SHOULD ONLY BE USED IF APPROVED BY H&S MECH TECH TEAM. MINOR REVISIONS IN OTHER AREAS.
06-09-08 APPROVED FOR WEB.

PART 1 - GENERAL

1.1 RELATED DOCUMENTS

INCLUDE PARAGRAPH 1.1.A AND B IN EVERY SPECIFICATION SECTION. EDIT RELATED SECTIONS 1.1.B TO MAKE IT PROJECT SPECIFIC.

A. Drawings and general provisions of the Contract, Standard General and Supplementary General Conditions, Division 1 Specification Sections, and other applicable Specification Sections including the Related Sections listed below, apply to this Section.

1.2 SCOPE OF WORK:

A. Furnish and install the cooling towers specified in this section, and as detailed and scheduled in the drawings.

1.3 RELATED SECTIONS:

SPEC EDITOR: THIS PARAGRAPH CAN BE DELETED IF COOLING TOWER IS INCLUDED IN GENERAL CONTRACT.

A. Section 220513 - Motors

1.4 QUALITY ASSURANCE:

A. Manufacturers and Products: The products and manufacturers specified in this Section establish the standard of quality for the Work. Subject to compliance with all requirements, provide specified products from the manufacturers named in Part 2.

B. Cooling Tower shall be CTI certified.

C. Handrails and ladders shall meet OSHA and MIOSHA requirements.

1.5 COOLING TOWER WARRANTY:

SPEC EDITOR: AS IS FOR MARLEY QUADRAFLOW. MODIFY FOR OTHERS.

A. The mechanical equipment including the motor must be warranted by the manufacturer against any failure caused by defects in materials and workmanship for at least five years from date of tower shipment. The balance of the cooling tower shall be warranted by the manufacturer for at least one (1) year from start-up, not to exceed 18 months from equipment ship date.

1.6 THERMAL PERFORMANCE WARRANTY:

SPEC EDITOR: RETAIN FOR ALL PROJECTS UNLESS TESTING IS INCLUDED AS PART OF THE PROJECT).

A. The Tower performance will not be verified, by independent tests, initially under this contract. Balancing will be limited to the extent described in section 230593. The owner, at his option, may hire an independent testing agency, during the performance guarantee period of five years, to test the cooling tower in accordance with applicable Cooling Technology Institute (CTI) standards and in the presence of a representative of the cooling tower manufacturer. If the performance does not meet specifications with no damage to any components of the tower, the tower manufacturer shall pay for the test done by the owner per CTI (Cooling Tower Institute) requirements and for the remedial actions required to meet the performance. Thermal performance must be warranted by the manufacturer for at least five (5) years from start-up.

MOST TOWERS BELOW ARE SPECIFIED AS FM APPROVED. VERIFY THE NEED FOR FM APPROVAL FOR YOUR SPECIFIC PROJECT, AND EDIT THE BELOW ACCORDINGLY. DEPENDING ON TOWER TYPE, SOME MANUFACTURERS MAY NOT BE ABLE TO PROVIDE A FM APPROVED TOWER.

PART 2 - PRODUCTS

2.1 GENERAL COOLING TOWER REQUIREMENTS

A. Design structural system for the following live loading in addition to tower dead-loads and operating-loads:

1. Wind Loading: 30 psf on exposed vertical surfaces.

SPEC EDITOR: DELETE IF NOT WINTERIZED / SELECT APPLICABLE

B. Basin Heater: Basin heaters sized by manufacturer to maintain basin water at 40 deg.F (4.4 deg.C) at ambient temperature of -10 deg.F and wind velocity of 15 mph.

SPEC EDITOR: ONLY ELECTRIC HEATER FOR MARLEY QUADRAFLO

SPEC EDITOR: CONSIDER TWO HEATER ELEMENTS IN LARGE COOLING TOWER CELLS IN SINGLE CELL APPLICATION.

1. Steam injection nozzle for each cold water basin for direct injection of steam into basin. Nozzle shall be Penberthy Model NWH steam injection nozzle with line size discharge pipe and all associated fittings required for a complete installation. Nozzles, piping, etc. shall be field installed.

2. Electric basin heater: One 480v or 208v (as scheduled), 3 phase basin heater element per cell, shipped loose to prevent damage during shipment. 480v or 208v (as scheduled), 3 phase contactor, fixed lockable disconnect, circuit breaker, and control transformer in a NEMA 4, 3R if mounted outdoors, NEMA 1 if mounted indoors, electrical panel. Control system shall be wired to a terminal strip allowing Owners Building Management System to energize contactor coil from a remote set of contacts. Manufacturer's standard combination water level and temperature sensor wired to terminal strip.

C. Water Level Control:

1. Float operated water make-up valves, one per cell, unless detailed or scheduled otherwise on the contract drawings. Make-up valves shall be actuated by a 2 piece float/valve rod assembly, with one rod oriented approximately vertically and connected to the float, and the second rod oriented horizontally and connected to the valve. Valve on-off shall be adjustable by adjustment of the vertical rod length. Floats shall be welded copper or polystyrene filled plastic. All castings for the float valves, float rod and keys, etc. shall be bronze construction with a complete non corroding construction assembly.

SPEC EDITOR: VSD IS ALWAYS REQUIRED.

D. Motor: Unless noted otherwise provide TEFC, inverter duty, 1800 rpm, located outside air stream. Refer to 220513 "Motors" for additional requirements

SPEC EDITOR: VERIFY ACCESS REQUIREMENTS. HANDRAIL AND LADDER NOT AVAILABLE ON QUADRAFLO.

SPEC EDITOR: INDICATE IN DRAWINGS LADDER AND HANDRAIL GENERICALLY. HANDRAIL REQUIRED ON TOP OF TOWER FOR EVAPCO.

E. Handrails: Unless noted otherwise, provide galvanized steel or aluminum pipe rails of required height above tower. Include knee and toe rails of required diameter and heights, meeting all the OSHA and MIOSHA requirements.

F. Ladders: Galvanized steel or aluminum ladder, to the access door and to top of cooling tower working surface, meeting OSHA and MIOSHA requirements. If access platforms are not provided then ladders shall extend beyond bottom of the cooling tower to access from roof, but shall not be supported from the roof.

1. Safety Cage: Include safety cage of galvanized steel or aluminum.
2. Provide ladder from roof to top of tower or highest service level.
3. Provide ladder from service platform to top of tower.

SPEC EDITOR: CONSULT WITH PROJECT DESIGNER, COORDINATE AS TO WHETHER THIS PARAGRAPH SHOULD BE INCLUDED.

G. Maximum Permissible Sound Pressure Level: Use 0.0002 microbar as reference. Measure at 50' in several directions, uniformly covering 360 deg. Do not exceed maximum permissible dB level each of the following octave bands:

SPEC EDITOR: CONTACT REPRESENTATIVE TO FILL IN THE BLANKS.

63 Hz - ?? dB
125 Hz - ?? dB
250 Hz - ?? dB
500 Hz - ?? dB
1000 Hz - ?? dB
2000 Hz - ?? dB
4000 Hz - ?? dB
8000 Hz - ?? dB

H. Vibration Control: Coordinate vibration support locations for cooling towers with steel support.

SPEC EDITOR: CHOOSE TYPE OF COOLING TOWER.

2.2 INDUCED DRAFT CROSSFLOW COOLING TOWER:

SPEC EDITOR: BASED ON MARLEY NC OR BAC SERIES 3000

A. General: Factory fabricated cooling tower, induced draft crossflow type. Cooling tower shall be FM approved.

B. Casings: 16 gauge G-235 galvanized steel minimum, with hot dipped galvanized steel screws and bolts.

C. Collecting Basin and Sump: Welded stainless steel. Collecting basin and sump, including lift-out stainless wire strainer with openings smaller than nozzle orifices, and with connections for equalizer piping, drain, overflow and water make-up.

D. Wetted-Surface Fill: Wave form vertical sheets of PVC having flame spread rating of 5 per ASTM E 84 - 77A.

E. Drift Eliminators: Limit drift-loss to indicated maximum percentage of 0.005 of total water circulated, with PVC, having flame spread rating of 5 per ASTM E 84 formed integral with the fill.

SPEC EDITOR: GALVANIZED STEEL IS BAC. INTEGRAL IS MARLEY.

F. Louvers: Designed and installed by manufacturer, and of sufficient thickness and rigidity to prevent visible sagging. Provide galvanized steel or PVC integral with fill.

G. Water Distribution System: Stainless steel, open basin, gravity-flow type with plastic metering orifices; installed by manufacturer to ensure even distribution of water over wetted-surface-fill, unless otherwise indicated on drawings, provide self-draining internal PVC piping from bottom inlet connection to distribution system.

H. Basin Covers: Galvanized steel or stainless steel sheet removable cover with handles of sufficient construction to permit walking upon, installed by manufacturer to prevent debris from entering basin and to inhibit algae growth by eliminating sunlight.

I. Air Inlet Screens: Galvanized steel mesh, mounted in removable frames by manufacturer or inert PVC integral to fill.

SPEC EDITOR: CAN BE OMITTED WITH TOWERS WITH BOTTOM INLET CONNECTIONS. DESIGNER TO INDICATE SEPARATE SHUT-OFF VALVES TO EACH CELL.

J. Flow Control Valves: Angle valves for balancing flow to each distribution basin or self-balancing distribution system.

K. Fans and Drives: Aluminum propeller-fan. Gear-drive including speed reducer with extended oil line and dipstick.

SPEC EDITOR: COORDINATE WITH ELEC. ENGINEER. SHOW FIELD WIRING TO NEMA 4 JUNCTION BOX WITH RESET BUTTON MOUNTED OUTSIDE OF TOWER. SHOW ON ELECTRICAL DRAWING, REFER TO STANDARD DETAIL.

L. Vibration Cutout Switch: Provide switch to de-energize fan motors if excessive vibration occurs due to fan imbalance. If vibration switch is located inside tower, provide remote reset feature wiring. Manufacturer: Metrix #5550.

M. Fan Guard: Galvanized steel welded steel rod and wire guard

FOR LARGE TOWERS WHERE THE FAN SPEED REDUCER IS NOT ACCESSIBLE FOR SERVICE FROM THE INTERNAL WALKWAY THAT IS SPECIFIED BELOW, DESIGNER SHOULD SPECIFY A SECONDARY PLATFORM WITH LADDER TO REACH THE SPEED REDUCER, WHEN AVAILABLE FROM THE MANUFACTURERS.

N. Access: Large access door at both ends of tower to eliminators and air plenum. Provide with internal walkways that extend the full length of the cooling tower basin, constructed of G-235 galvanized steel with hot dipped galvanized steel screws and bolts.

O. Cooling tower manufacturer: Marley NC or BAC Series 3000.

2.3 INDUCED DRAFT COUNTERFLOW COOLING TOWER:

SPEC EDITOR: BASED ON EVAPCO AT, UNDER CONSIDERATION ON A PROJECT TO PROJECT BASIS. TO BE APPROVED BY HYDRONICS MECH TECH TEAM.

A. General: Factory fabricated cooling tower, induced draft counter flow type. Cooling tower shall be FM approved.

B. Casings: 16 gauge G-235 galvanized steel minimum, with steel screws.

C. Collecting Basin and Sump: Welded 304 stainless steel. Collecting basin and sump, including lift-out stainless wire strainer with openings smaller than nozzle orifices and with connections for equalizer piping, drain, overflow and water make-up, as required for specified application.

D. Wetted-Surface Fill: Wave form vertical sheets of PVC having flame spread rating of 5 per ASTM E 84 - 77a .

E. Drift Eliminators: Limit drift-loss to the indicated maximum percentage of 0.001 of total water circulated, with PVC, having flame spread rating of 5 per ASTM E 84-81a formed integral with the fill.

F. Louvers: Designed and installed by manufacturer, and of sufficient thickness and rigidity to prevent visible sagging. Provide drift eliminators for cooling tower to be PVC and mounted horizontally above the water distribution system.

G. Water Distribution System: Cooling tower to be equipped with a non-corrosive water distribution system consisting of schedule 40 polyvinyl chloride (PVC) header and spray branches, nozzles are to be clog resistant and thread into the PVC header pipe.

H. Air Inlet Screens: Cooling tower shall be equipped with PVC inlet louvers mounted in removable frames by manufacturer.

I. Fans and Drives: Aluminum propeller-fan. Gear-drive including speed reducer with extended oil line and dipstick.

SPEC EDITOR: COORDINATE WITH ELEC. ENGINEER. SHOW FIELD WIRING TO NEMA 4 JUNCTION BOX WITH RESET BUTTON MOUNTED OUTSIDE OF TOWER. SHOW ON ELEC. DRAWING.

J. Vibration Cutout Switch: Provide switch to de-energize fan motors if excessive vibration occurs due to fan imbalance. If vibration switch is located inside tower, provide remote reset feature wiring. Manufacturer: Metrix #5550.

K. Fan Guard: Galvanized steel welded steel rod and wire guard

L. Access: Cooling tower shall be equipped with fan plenum access. Provide removable access port at end of headers to facilitate cleaning of distribution piping.

M. Side mounted Working Platform, Handrail & Ladder with Davit: Provide working platform for access to motor and fan plenum with ladder.

N. Inlet & Outlet connections: Grooved to accept a mechanical coupling device.

SPEC EDITOR: BOTTOM INLET AVAILABLE IN SPECIFIC TONNAGES. FLANGED CONNECTIONS IS AN OPTION AT ADDITIONAL COST.

O. Cooling Tower Manufacturer: Evapco AT series.

2.4 INDUCED DRAFT COUNTERFLOW MODULAR COOLING TOWER

SPEC EDITOR: BASED ON TOWER TECH TTXE SERIES MODULAR; UNDER CONSIDERATION ON A PROJECT BY PROJECT BASIS. TO BE APPROVED BY HYDRONICS MECH TECH GROUP

A. General: Furnish and install as shown on the plans, a Tower Tech factory-assembled, forced draft, counterflow, modular cooling tower, Model TTXE _____. The tower's principal construction shall be of pultruded Fiberglass Reinforced Polyester (FRP) and must have a flame spread rating less than 25 or a flammability coefficient of 94-V0. The module must be capable of operating independently or in combination with future modules.

B. Tower shell and substructure: (legs) shall be designed to withstand a wind load equivalent to 80 MPH and be able to resist seismic forces classified under Zones 1 and 2.

C. Casing: The cold water basin and the tower casing shall be constructed of pultruded Fiberglass Reinforced Polyester (FRP) with UV inhibitors. It shall have a minimum thickness of ¼" and a minimum density of 0.07 lb/in cubed. Specially placed reinforcement and a UV veil layer will ensure the structural strength and longevity. Wall panels shall be covered by a five (5) year warranty, excluding cosmetic or superficial damage/wear.

D. Water Distribution System: Water shall enter the tower through a single inlet comprised of an enclosed, low pressure, non-corrosive Polyvinyl Chloride (PVC) Schedule 40 piping system. Water will be distributed further using Schedule 40 PVC lateral(s). Water shall be uniformly sprayed over the fill media by evenly spaced and sized rotary spray nozzles that are capable of automatically adjusting the size of their exit orifices to accommodate varying water flows. The nozzles shall have a four (4) inch orifice for clog free operation, produce a square pattern, and shall be located no more than three inches above the fill media. The nozzles must operate between a minimum ½ pound of pressure and a maximum 1½ pounds of pressure. The nozzles shall be made of High Density Polyethylene (HDPE) and/or Acrylonitrile Butadiene Styrene copolymer (ABS). Water distribution system shall be covered by a one (1) year warranty.

E. Perimeter Basin: Tower shell or casing shall have an integral perimeter basin. Its elevated location shall reduce operational pump head requirements. Its high velocity water flow during operation shall prevent accumulation of sediment. Perimeter basin shall be equipped with one inspection port at each corner.

F. Sump: Tower shall be equipped with a terminally mounted (end wall) outlet sump with a flanged discharge connection for simplified piping. Sump casing shall be manufactured of rotationally molded Polypropylene (PP). Standard equipment shall include a mechanical float valve, flanged overflow/equalization connection, and a corrosion-free, easily removable sump screen. Sump shall be covered by a one (1) year warranty.

G. Fill & Drift Eliminators: Fill shall be Polyvinyl Chloride (PVC) of cross-fluted design, 10 mil (after forming), impervious to decay, fungus and biological attack. Fill sheets shall be self-spacing, supported on maximum spans of 12". Each fill sheet shall have a microstructure to improve heat transfer. Fill sheets shall be bonded together to give a cross-corrugated pattern by application of glue only to dedicated glue joints. Fill packs made from random application of glue shall not be acceptable. Fill packs or blocks shall be placed in the tower so as to provide the tightest fit possible without damage to the fill. Drift eliminators shall be minimum three-pass Polyvinyl Chloride (PVC) material of cellular design impervious to decay, fungus and biological attack. Drift losses shall not exceed 0.005% of the design circulating flow rate.

H. Water Collection System: The tower shall utilize a water collection system positioned beneath the fill media and above the air inlet. The water collection system shall collect cold water as it falls from the fill media and channel the cooled water into the tower's elevated perimeter basin permitting the mechanical equipment to be mounted in the cool dry entering air stream beneath the tower. The water collectors shall be made of extruded flame retardant Acrylonitrile Butadiene Styrene copolymer (ABS) material and shall contain an integral damper system that opens mechanically with airflow. The damper system will prevent entry of airborne debris when the fan below it is off. The water collection system shall be covered by a one (1) year warranty.

I. Motor: The tower shall contain _____ motors at ___ horsepower per motor for a total installed horsepower of ____. The motors shall be Totally Enclosed Air Over (TEAO) with a service factor of 1.15 and must be suitable for 230/460-Volt, 3-phase, 60-Hz service. Motors shall operate at 860-900 RPM and be single-speed, single winding. Maximum brake horsepower shall not exceed the nameplate horsepower at design operating conditions. The motor(s) shall be mounted to a 304 stainless steel sub-structure using 304 stainless steel bolts.

J. Fans: Fans shall be of an axial, airfoil design positioned within an aerodynamically streamlined fiberglass shroud and installed with a minimum of tip clearance for maximum efficiency. A fan shall have four (4), eight (8), or six (6) blades when powered by a 3, 5, or 7.5 horsepower motor, respectively. Fan blades shall be manufactured of Fiberglass-Reinforced Polypropylene and be pitch-adjustable. Fan hubs shall be manufactured of high strength, low weight aluminum alloy to minimize stress and wear on motor bearings. The cooling tower shall have ___ direct-drive fans per cell. Both the fan assembly and motor shall be installed outside the tower's hot moist exiting air stream. Towers utilizing gear reducers or belt driven units will not be accepted. A corrosion resistant mesh fan guard to prevent entry of airborne objects into the fan is required.

K. Cooling Tower Manufacturer: Tower Tech TTXE Series.

2.5 FIBERGLASS CROSSFLOW COOLING TOWER:

SPEC EDITOR: BASED MARLEY QUADRAFLOW.

SPEC EDITOR: FIBERGLASS TOWER NOT FM APPROVED. COORDINATE WITH PROJECT FM REQUIREMENTS.

A. General: Induced draft cooling tower constructed entirely from fiberglass reinforced polyester with stainless steel fasteners except where specified below.

B. Casings: Fiberglass Reinforced Polyester (FRP), fabricated and installed by manufacturer to make tower watertight.

SPEC EDITOR: DESIGNER NEEDS TO PROVIDE SUFFICIENT HEIGHT FOR MAINTENANCE PERSONNEL TO ACCESS HATCH IN CENTER OF TOWER. PROVIDE SUFFICIENT SPACE AROUND ENTIRE PERIMETER OF TOWER TO

ALLOW ACCESS TO BASIN COVERS VIA AN EXTERNAL PERIMETER PLATFORM WITH HANDRAILS OR WITH A PORTABLE LADDER.

C. Collecting Basin and Sump: FRP. Provide integral type collecting basin and sump with lift-out strainer with openings smaller than nozzle orifices, and with connections for equalizer piping in multiple cell installation, drain, overflow and water make-up. See plans for requirement on make-up valve and backflow preventer.

D. Wetted-Surface Fill: Wave form vertical sheets of PVC having flame spread rating of 5 per ASTM E 84 - 81A.

E. Drift Eliminators: Limit drift-loss to the indicated maximum percentage of 0.005 of total water circulated, with PVC plastic, having flame spread rating of 5 per ASTM E 84.

F. Louvers: Designed and installed by manufacturer, and of sufficient thickness and rigidity to prevent visible sagging: PVC, integral with fill.

G. Water Distribution System: FRP basin with polypropylene nozzles shall provide full coverage of the fill by gravity flow.

H. Basin Covers: Provide removable cover with handles, installed by manufacturer to prevent debris from entering basin and to inhibit algae growth by eliminating sunlight. Made of FRP.

I. Air Inlet Screens: Stainless steel mesh, mounted in removable frames by manufacturer.

J. Fans and Drives: Aluminum propeller-fan of adjustable-pitch type. Provide gear-drive including speed reducer with extended oil line and dipstick.

SPEC EDITOR: COORDINATE WITH ELEC. ENGINEER. SHOW FIELD WIRING TO NEMA 4 JUNCTION BOX WITH RESET BUTTON MOUNTED OUTSIDE OF TOWER. SHOW ON ELEC. DRAWING.

K. Vibration Cutout Switch: Provide switch to de-energize fan motors if excessive vibration occurs due to fan imbalance. Vibration switch shall be Metrix model #550. If vibration switch is located inside tower, provide remote reset feature with required wiring.

L. Fan Guard: Stainless steel welded steel rod and wire guard

M. Cooling tower manufacturer: Marley Quadraflow

2.6 FORCED DRAFT COOLING TOWERS:

SPEC EDITOR: BASED ON BAC SERIES V AND MARLEY

SPEC EDITOR: PROVIDE ADEQUATE SPACE FOR FAN SHAFT REMOVAL.

A. General: Forced draft cooling tower with vertical discharge and side intake. Cooling tower shall be FM approved.

B. Casings: Galvanized steel fabricated and installed by manufacturer to make tower watertight.

C. Fan/Pan Section: The combination Pan/Fan section shall be constructed with galvanized steel. The fans and motors shall be located in the dry air stream.

D. Surface Section: Removable from the Pan/Fan section to facilitate rigging. Provide serpentine PVC wet deck surface with individually supported fill sheets installed no closer than ¾" to one another, and galvanized casing steel panels.

E. Eliminators: Eliminators shall be steel galvanized and shall limit drift losses to 0.002% of total water circulated.

F. Water Distribution System: One of the following materials designed and installed by manufacturer to ensure even distribution of water over wetted-surface-fill.

1. Schedule 40 PVC pipe header and removable schedule 40 PVC pipe branches.
2. Nozzles: Provide removable plastic or brass.
3. Pressure Drop: Maximum pressure drop of 5 psi.

G. Air Inlet Screens: Galvanized steel mesh , mounted in removable frames by manufacturer:

H. Fans and Drives: Provide forward curved centrifugal fans with galvanized steel blades and V-belt drive with sheave sized for rated air flow.

I. Fan Bearings: Self-aligning ball bearings; include external extended grease lines, and fittings. Installed by manufacturer.

J. Water Distribution System: Water shall enter the tower through a single inlet comprised of an enclosed, low pressure, non-corrosive Polyvinyl Chloride (PVC) Schedule 40 piping system. Water will be distributed further using Schedule 40 PVC lateral(s). Water shall be uniformly sprayed over the fill media by evenly spaced and sized rotary spray nozzles that are capable of automatically adjusting the size of their exit orifices to accommodate varying water flows. The nozzles shall have a four (4) inch orifice for clog free operation, produce a square pattern, and shall be located no more than three inches above the fill media. The nozzles must operate between a minimum ½ pound of pressure and a maximum 1½ pounds of pressure. The nozzles shall be made of High Density Polyethylene (HDPE) and/or Acrylonitrile Butadiene Styrene copolymer (ABS). Water distribution system shall be covered by a one (1) year warranty.

K. Cooling tower manufacturers: Marley, Baltimore Air Coil, Evapco.

PART 3 - EXECUTION

3.1 STORAGE:

A. Store tower and materials off ground until unit is placed. Follow manufacturer's requirements for support.

B. Perform all maintenance as required by manufacturer during storage until unit is turned over to owner Provide documentation on date and type of maintenance preformed.

3.2 INSTALLATION:

A. Any and all items shipped loose with the tower, such as rails, float valves fan shroud, walkways, ladder, motor, motor mount and any item required for proper operation of tower, shall be assembled and installed per manufacturer's requirements.

B. Access: Provide access and service space around and over cooling towers as indicated, but in no case less than that recommended by manufacturer.

C. Support: Install floor-mounted units on 4" high reinforced concrete pad, 4" larger on each side than cooling tower base. Cast anchor bolt inserts into pad.

SPEC EDITOR: STEEL SUPPORT PAINTING BY ARCH. TRADES.

D. Support: Install roof-mounted units on structural steel mechanical equipment supports as shown in the drawings. Anchor cooling tower to supports with removable fasteners. Verify support configuration against tower shop drawing prior to tower delivery.

SPEC EDITOR: DO NOT PLACE TOWER DIRECTLY ON VIBRATION ISOLATORS. CONFIRM WITH MANUFACTURER REQUIREMENTS FOR SECONDARY STEEL.

E. Placement: Mount unit on vibration isolators. Install gaskets or sealants between cooling tower cells. Level units to tolerance of 1/8" in 10'-0", in both directions.

F. Condenser Water Piping: Provide flanged or union connections to cooling tower, with flexible pipe connections if tower is mounted on vibration isolators. Pitch lines so water will drain into sump. Connect inlets to cooling tower with shutoff valve, and balancing valve (if 2 or more inlets). Connect outlets with shutoff valves.

SPEC EDITOR: MAKE SURE THIS IS DETAILED ON DRAWING.

G. Make-up and Water Piping: Provide flanged or union connections to cooling tower, with flexible pipe connections if tower is mounted on vibration isolators. Pitch lines so water will drain into sump.(Engineer to verify need for backflow preventer.)

H. Drain Piping: Connect drain and overflow to cooling tower as indicated, full size of connection on cooling tower.

I. Electrical Wiring: Install electrical devices furnished by manufacturer but shipped loose. Furnish copy of manufacturer's wiring diagram submittal to Electrical Installer.

J. Final Alignment: Factory trained technician shall verify and align if necessary the drive system prior to start-up, within 0.004".

3.3 ADJUSTING AND CLEANING:

A. Start-up: Check, test and startup by manufacturer's technical representative, including final adjustments to blades and drives. Comply with manufacturer's instructions for filling and start-up of operation, but not less than the following:

1. Verify lubrication of rotating parts; lubricate as needed.
2. Verify fan rotation direction.
3. Verify that motor amperage is in accordance with manufacturer's data.
4. Balance water flow to each tower and to each inlet for multiple inlet towers.
5. Adjust water level control for proper operating level.
6. Balance equalizer lines between multiple towers (if any).

B. Commissioning:

1. Manufacturer's representative shall attend pre-field assembly meeting to verify, in writing, that all tower parts have been shipped without damage and to instruct installing contractor on proper assembly.
2. Manufacturer's representative shall attend initial tower startup to verify, in writing, that the tower is properly assembled and fastened, the flow to the hot basins is properly balanced, the float valve operates properly, the fans operate properly through the entire speed range and the fan motors are drawing the proper amperage and verify operation & setting of vibration switch.

SPEC EDITOR: ADD FOR BASIN ELECTRICAL HEATER

3. Manufacturer representative shall verify in writing that each heater element draws the proper amperage and shuts off on low water level

3.4 CLOSEOUT PROCEDURES:

A. Provide services of manufacturer's technical representative for one 8-hour day to instruct Owner's personnel in operation and maintenance of factory-fabricated cooling towers.

1. Schedule training with Owner, provide at least 7-day notice to Contractor and Engineer of training date.

END OF SECTION 236500

UNIVERSITY OF MICHIGAN
ARCHITECTURE, ENGINEERING AND CONSTRUCTION

ARCHITECTURE & ENGINEERING
326 East Hoover, Mail Stop B
Ann Arbor, MI 48109-1002
Phone: 734-764-3414
Fax: 734-936-3334

SPECIFICATION DIVISION 23

NUMBER SECTION DESCRIPTION

DIVISION 23
SECTION 237213 - Rotary Air-to-Air Energy Recovery Wheels

END OF CONTENTS TABLE

AUGUST 2105: UPDATE TO IMPROVE CROSS WHEEL LEAKAGE REQUIREMENTS, ADD ROTATION DETECTION DEVICE, IMPROVE BEARING REQUIREMENTS, MODIFY DUAL BELT REQUIREMENT TO ALLOW SPARE BELTS ILO DUAL BELTS, PROVIDE AHRI CERTIFICATION DOCUMENTS, ADD FACTORY TESTING REQUIREMENT, ADVISE DO NOT USE WHEELS IN HAZARDOUS EXHAUST, ADD SOURCE QUALITY CONTROL SECTION, AND MISC. MINOR IMPROVEMENTS, ALL AS A RESULT OF FIELD EXPERIENCE. D. KARLE FOR HVAC MTT.

MAY 2016: REVISED TO ADD INNERGYTECH AND DROP DRI DUE TO DRI NOT BEING ABLE TO COMPLY WITH THE SPECIFICATION. ADDITIONAL MINOR REVISIONS. D. APPEL FOR HVAC MTT. NEVER ISSUED AS MASTER.

DECEMBER 2016: UPDATED TO DROP MOTORS AS A RELATED SECTION TO ALLOW WHEEL MFR.S TO SUPPLY SPECIALTY MOTORS THAT ALLOW SLOW ROTATION OF THE ENERGY WHEEL WHEN DRIVEN BY VFD. ALSO TO POST THE APPEL MAY 2016 CHANGES THAT HAD NEVER BEEN ISSUED AS A MASTER SPEC. D. KARLE FOR HVAC MTT.

DIVISION 23
SECTION 237213 – ROTARY AIR-TO-AIR ENERGY RECOVERY WHEELS

PART 1 - GENERAL

1.1 RELATED DOCUMENTS

A. Drawings and general provisions of the Contract, including Standard General Conditions, Supplemental General Conditions, Division 01 Specification Sections, and other applicable Specification Sections, in particular the Related Sections listed below, apply to this Section.

IN 1 AND 2 BELOW, SELECT PROPER SPEC SECTION NUMBER BY PROJECT. DELETE SUSTAINABLE DESIGN / LEED IF NOT APPLICABLE TO PROJECT.

B. Related Sections:

1. Section 018113: Sustainable Design Requirements.

2. Section 019100/019110: Facilities Commissioning
3. Section 220500: Common Work Results for Mechanical
4. Section 220514: Variable Frequency Drives
5. Section 237323: Custom Air Handling Units
6. Section 237324: Semi Custom Air Handling Units
7. Section 230900: Mechanical Systems Controls
8. Section 230593: Testing, Adjusting and Balancing
9. Division 26: Electrical

1.2 SUMMARY

A. Products specified in this section include the following:

1. Desiccant coated rotary air-to-air heat exchangers for the recovery of sensible and latent energy.
2. Rotary air-to-air heat exchangers for the recovery of sensible energy.

1.3 SUBMITTALS

A. Product Data: For each energy recovery wheel indicated, provide the following:

1. Complete performance data including all data required by AHRI 1060 at both Standard and Application conditions and data validating all specified and scheduled performance requirements.
2. AHRI certification sheets for the selected unit at 100% cooling and heating conditions demonstrating that desiccant loading delivers equal sensible and latent heat transfer from the rotor assembly.
3. Motor ratings, manufacturer, electrical characteristics, and motor accessories.
4. Belt, gear reducer, coupling, and tensioner data.
5. Identify the minimum and maximum rotor speed and the design frequency of the variable frequency drive associated with each speed.
6. Rotation detection device
7. Certified bearing calculations demonstrating that air handler quality minimum L-10 200,000 hour rotor bearings will be provided.
8. Materials, gages and anti-corrosion finish data.

B. Shop Drawings:

1. Project specific drawings with dimensions of each wheel assembly.

ASHRAE 84 DATA WILL PROVIDE DATA CLOSE TO OR AT PROJECT DESIGN CONDITIONS V. EXTRAPOLATED DATA BASED UPON AHRI CERTIFICATION AND THEREFORE IT IS IMPORTANT TO REQUIRE ASHRAE 84 DATA TO ASSURE WHEEL PERFORMANCE.

C. Submit AHRI Certification sheet for each specific wheel model proposed. Also submit independent testing in accordance with the full ASHRAE Standard 84 requirements showing, as required, recovery efficiencies at 400 to 1000 ft/min in 100 cfm increments and for flow ratios from 1.0 to 0.5 in 0.1 ratio increments.

CROSS CONTAMINATION DATA IS REQUIRED IF THE WHEEL IS TO BE USED FOR A LABORATORY. IF NOT USED IN A LAB APPLICATION, DELETE THE BELOW PARAGRAPH.

D. Submit cross-contamination certification reports from a credible testing agency.

E. Submit antimicrobial agent performance certification report (when a antimicrobial coating is specified) from a credible testing agency, verifying that antimicrobial coating will be effective in this application.

F. Installation, operation, and maintenance manuals.

1.4 MAINTENANCE MATERIAL SUBMITTALS

A. Spare parts to be provided:

1. One spare rotor belt.

1.5 QUALITY ASSURANCE

A. Manufacturers and Products: The products and manufacturers specified in this Section establish the standard of quality for the Work. Subject to compliance with all requirements, provide specified products from the manufacturers named in Part 2.

B. Reference Standards: Products in this section shall be built, tested, and installed in compliance with the specified quality assurance standards; latest editions, unless noted otherwise.

1. AHRI 1060 - Performance Rating for Air-to-Air Exchangers for Energy Recovery Ventilation Equipment
2. ASHRAE Standard 111 Measurement, Testing, Adjusting and Balancing of Building Heating, Ventilation and Air-Conditioning Systems
3. ASHRAE 62.1 - Ventilation for Acceptable Indoor Air Quality
4. ASHRAE 84 - Method of Testing Air-to-Air Heat/Energy Exchangers
5. NFPA 90A - Standard for the Installation of Air Conditioning and Ventilating Systems
6. ASTM E84 - Standard Test Method of Surface Burning Characteristics of Building Materials
7. UL 1812 - Standard for Ducted Heat Recovery Ventilators
8. NFPA 70 - National Electric Code.
9. AFBMA 9 - Load Ratings and Fatigue Life for Ball Bearings.
10. NEMA MG-1 - National Electrical Manufacturers Association Motor Standards.
11. SMACNA - HVAC Duct Construction Standards- Metal and Flexible
12. AABC - National Standards for Field Measurement and Instrumentation - Total System Balance", Current Volume and Supplements
13. NEBB - Procedural Standards for Testing, Adjusting and Balancing of Environmental Systems

1.6 DELIVERY, STORAGE AND HANDLING

A. Ship all components in weather-proof wrap for storage outdoors. Protect wheels, housings, control panels, and any other sensitive components with heavy plastic or other durable means to ensure cleanliness and prevent damage during shipping and storage. Maintain protection during installation.

1.7 WARRANTY

A. Provide a complete warranty for **parts and labor** for a minimum of **ten** years from the date of Substantial Completion. Exception: Belts shall be warranted 1 year.

PART 2 - PRODUCTS

2.1 MANUFACTURERS

A. Acceptable Manufacturers:

1. Semco LLC
2. Innergytech Inc

2.2 ENTHALPY ENERGY RECOVERY WHEELS

A. General

ROTARY AIR-TO-AIR HEAT EXCHANGERS SHOULD NOT BE USED IN HAZARDOUS EXHAUST SYSTEMS.

THIS SPECIFICATION IS WRITTEN ASSUMING THE ENERGY RECOVERY WHEEL WILL BE INSTALLED IN AN AIR HANDLER/ENERGY RECOVERY UNIT, AND THEREFORE ACCESS DOORS WILL BE PROVIDED ON ALL FOUR SIDES OF THE WHEEL PER THE SPECIFICATION FOR THAT EQUIPMENT. IF THE WHEEL IS TO BE INSTALLED IN DUCTWORK, THE DESIGNER MUST DESIGNATE ACCESS DOORS OR PANELS UPSTREAM AND DOWNSTREAM OF BOTH SIDES OF THE WHEEL TO PERMIT ACCESS.

FAN LOCATIONS SHOULD BE CAREFULLY SELECTED TO CREATE A POSITIVE PRESSURE DIFFERENTIAL AT THE WHEEL (HIGHER STATIC ON THE SUPPLY VS RETURN SIDE).

1. The recovery wheel assembly shall be furnished in an air handler casing. Recovery wheel casing construction and performance shall match that of the associated air handler/energy recovery unit of which the recovery wheel is a component.
2. Recovery wheel manufacturer shall provide a complete sequence of operation to allow the Owner's Direct Digital Control System to provide proper recovery wheel control. The sequence shall include how motors speed is to be adjusted to optimize heat recovery, the minimum and maximum motor frequency/speed, summer/winter change-over, economizer mode, and defrost control.

B. Performance

1. The recovery wheel shall bear the AHRI Certification Seal and be UL 1812 listed.

2. The recovery wheel shall meet NFPA 90A requirements for flame spread and smoke generation when tested per ASTM E84.
3. The manufacturer shall guarantee that the performance requirements stated below and scheduled on the project drawings will be met by the recovery wheel as installed at the project site, when tested per ASHRAE Standard 84 and AHRI STANDARD 1060. The manufacturer similarly guarantees all Application Ratings submitted for review. The Owner reserves the right to field verify that the performance requirements and Application Ratings were met by testing in accordance with ASHRAE Standard 84/AHRI STANDARD 1060, utilizing an independent testing agency. The Owner may also field verify seal leakage and purge volume at the actual wheel pressure differentials by measurement and calculation, utilizing NEBB or AABC air flow measurement procedures. The Owner has exclusive right to select the testing agency. Recovery wheels found deficient of any performance requirement shall be corrected and retested by the manufacturer (utilizing the testing agency that performed the original tests) without additional cost to the Owner until all the requirements are achieved.
4. The Exhaust Air Transfer Ratio (EATR) shall be less than 1 percent at the scheduled air flow and pressure conditions. The purge volume required to achieve this EATR shall not exceed the purge volume indicated by the scheduled air flows.

THE BELOW PARAGRAPH REQUIRES THAT LESS THAN 10% LEAKAGE OCCUR FROM THE EXHAUST TO THE SUPPLY SIDE OF THE RECOVERY WHEEL WITH THE PURGE SET TO ZERO. ASHRAE 62.1-2010 PERMITS UP TO 10% LEAKAGE OF AIR THAT IT DEFINES AS CLASS 2, FOR EXAMPLE TOILET EXHAUST. THIS ALLOWS THE RECOVERY WHEEL TO BE USED IN CLASS 2 AIR WITHOUT THE NEED FOR PURGE AIR, WHICH WASTES ENERGY AND REQUIRES THAT THE SUPPLY FAN TO BE OVERSIZED. HOWEVER, THE DESIGNER NEEDS TO WEIGH ANY DISADVANTAGES THAT MAY OCCUR IF THE PURGE SECTOR IS SET TO ZERO. FOR LOW RISK APPLICATIONS INVOLVING CLASS 2 AIR, DESIGNERS SHOULD STRONGLY CONSIDER SPECIFYING THAT THE PURGE BE SET TO ZERO. ALSO NOTE THAT THE WORDING BELOW "RECIRCULATION FROM LEAKAGE, CARRYOVER, OR TRANSFER FROM THE EXHAUST SIDE SHALL NOT EXCEED 10.0 PERCENT OF THE OUTDOOR INTAKE FLOW" IS TAKEN FROM ASHRAE 62.1 AND SHOULD NOT BE MODIFIED INDISCRIMINATELY.

5. With the adjustable purge sector set to zero degrees (zero purge), recirculation from leakage, carryover, or transfer from the exhaust side shall not exceed 10.0 percent of the outdoor intake flow at a differential pressure between the supply and exhaust/return air streams at the recovery wheel location of up to 12 inches water column.

C. Rotor Media:

FOR CORROSIVE SERVICE A MORE ROBUST COATING THAN MFR.'S STANDARD ANTI-CORROSION COATING MAY BE APPROPRIATE. CONTACT MFR. FOR OPTIONS.

1. The heat transfer substrate shall be constructed of aluminum formed into a honeycomb media structure. Non-metallic substrates made from paper, plastic, synthetic or glass fiber media are not acceptable.

2. The faces of the substrate surfaces shall have an anti-corrosion coating.
3. The faces of the recovery wheel shall be sealed with a two part acid resistant coating that limits surface oxidation.
4. Dry particles up to 800 microns shall pass freely through the media.
5. The media shall be cleanable with hot water and mild detergent, without degrading the sensible or latent recovery capabilities of the energy recovery wheel system.
6. Desiccant coating:
   a. All substrate surfaces shall be coated with a non-migrating solid absorbent desiccant layer prior to being formed into the honeycomb.
   b. The desiccant coating shall be applied to both surfaces of the aluminum substrate.
   c. The desiccant shall be an inorganic 3Å molecular sieve type certified by the manufacturer to have an internal pore diameter distribution which limits adsorption to materials not larger than the critical diameter of a water molecule (2.8 Å).

DO NOT DELETE EQUAL SENSIBLE AND LATENT PARAGRAPH BELOW. EQUAL SENSIBLE AND LATENT HEAT TRANSFER CAPABILITY ALLOWS THE WHEEL TO OPERATE AT MUCH LOWER TEMPERATURES WITHOUT FROSTING, INCREASING HEAT RECOVERY SAVINGS SIGNIFICANTLY.

   d. AHRI certification sheets for the selected unit at the 100% cooling and heating conditions shall demonstrate that desiccant loading delivers equal sensible and latent heat transfer from the rotor assembly.
   e. An independent test from a credible test laboratory shall document that the desiccant material utilized does not transfer pollutants typically encountered in the indoor air environment.

THE BELOW SAMPLE LANGUAGE (IN HIDDEN TEXT) FOR AN ANTIMICROBIAL AGENT MAY BE APPROPRIATE FOR HOSPITAL AND OTHER CRITICAL APPLICATIONS. IF REQUIRED, VERIFY WITH WHEEL MFR.S EXACTLY WHAT CAN BE SUPPLIED, THEN REVISE THE BELOW AFTER UN-HIDING THE TEXT.

   f. The media shall be treated with an antimicrobial agent, tested and certified by an independent testing agency for effective antimicrobial action and bacteria-static properties in an energy recovery wheel (or functionally equivalent) application. .

D. Rotor Assembly

FOR CORROSIVE SERVICE A MORE ROBUST COATING THAN MFR.'S STANDARD ANTI-CORROSION COATING MAY BE APPROPRIATE. CONTACT MFR. FOR OPTIONS.

1. Rotor media shall be supported in a spoked rotor-wheel system constructed of an extruded aluminum ring and extruded aluminum spokes and welded or bolted construction. All rotor assembly surfaces shall be coated with an anti-corrosion coating except aluminum and stainless steel components.

2. The rotor media shall be provided in segments to allow for field erection or replacement of one section of media at a time by removal from the rotor face. Provide as many segments as necessary to allow the media segment to be removed through the air handler/energy recovery unit rotor section access door. Media segments shall be compressed in place independent of other segments and shall not be secured with adhesives or silicone.
3. The rotor shall be supported by grease lubricated or lubricated for life air handler quality tapered roller bearings in pillow block housings. The bearings shall be selected to provide a minimum L-10 life of 200,000 hours at maximum operating speed and horsepower. Bearing calculations shall be provided. It shall be possible to replace the bearings without removing the rotor or rotor shaft. Shaft journals shall be machined to proper tolerance as specified by the bearing manufacturer. The Shaft shall be machined to provide a shoulder against the bearings to eliminate any lateral movement of the rotor due to axial bearing loads. When provided, grease fittings shall be easily accessible.
4. The rotor structural support framework shall be galvanized or epoxy painted tubular steel, welded construction, and suitably braced for rigging and operation to assure all performance requirements are achieved.
5. The deflection of the entire rotor assembly, as measured at the outer radius, shall not exceed 1/32" at the scheduled maximum rotor air pressure drop and at the maximum pressure difference between the exhaust/return and the supply side of the recovery unit.
6. Provide a field adjustable purge sector, factory set. Mark the factory set purge sector position.
7. Rotor seals shall be non-contact multi-pass labyrinth type, secured and field adjustable via an aluminum retainer or stainless steel clips, adjustable by means of slots and bolts, and factory set to the rotor manufacturer's specified gap required to achieve the specified leakage values. When subjected to a pressure difference up to 12 in. w.c., the seal system shall be undamaged and shall achieve the specified leakage rates and all other performance requirements when the pressure difference is restored to the design operating range.

E. Rotor Drive System

1. Provide motor, speed reducer, and V-belt riding in a groove in the rotor rim to eliminate side-to-side movements and slippage. Provide a spare belt.
2. Provide speed reducers shall be grease lubricated and easily removable from motor.

RE. BELOW PARAGRAPH: A RECOVERY WHEEL THAT CAN'T BE SLOWED ENOUGH RESULTS IN LESS ENERGY SAVINGS BECAUSE IT MUST BE TURNED OFF EARLIER DURING MILD OUTSIDE AIR CONDITIONS TO AVOID OVER-RECOVERY AND OVER-SHOOT OF THE AIR TEMPERATURE SET POINT. THE DESIGNER SHOULD ESTABLISH PROJECT SPECIFIC MINIMUM AND MAXIMUM ROTOR SPEEDS WITH THE WHEEL MFR. AND SCHEDULE BOTH ON THE DRAWINGS. ASSURE THE MINIMUM ROTOR SPEED IS LOW ENOUGH TO ALLOW CONTINUED RECOVERY UNDER FROST AVOIDANCE AND MILD CONDITIONS. A MODULATING DAMPER IN A BYPASS AROUND THE WHEEL ON THE EXHAUST

SIDE MAY BE A BETTER SOLUTION THAN TRYING TO OPERATE THE ROTOR AT VERY LOW SPEED.

3. The motor/speed reducer/belt-drive system shall provide smooth control of the rotor speed throughout the minimum and maximum rotor speed range scheduled. The gear reducer motor speed in all cases shall be adjustable between a range of not less than 5-60 hertz without motor or speed reducer damage, when operated with a variable frequency drive that complies with Related Section 220514.
4. Locate the motor and gear reducer in the supply air stream in an easily accessible location.
5. Provide a rotor rotation detection device compatible with the Owner's Building Automation System (BAS) that provides a dry electrical contact that automatically closes when the rotor rotates and automatically opens when the rotor stops. Provide conduit routed from the detection device to the exterior of the air handler to allow connection to Owner's BAS.

2.3 SENSIBLE ENERGY RECOVERY WHEELS

A. Provide sensible energy recovery wheels matching all the requirements specified for Enthalpy Energy Recovery wheels with the exception that desiccant coating shall not be provided.

2.4 SOURCE QUALITY CONTROL

A. Recovery wheels shall be assembled with the respective air handling equipment and factory tested prior to shipping to validate the performance requirements indicated below. Provide all temporary equipment required to perform testing. Correct deficiencies at the factory prior to shipping.

B. Testing shall comply with ASHRAE Standard 111. Submit proposed test procedure to the University representative for approval, detailing methods, equipment, and techniques to be employed for each specific test. Equipment will not be considered approved until written approval of testing procedures is attained. Testing must also be in accordance with Quality Assurance Standards section.

C. Tests shall meet the required acceptance criterion without the use of temporary seals.

D. At the conclusion of factory testing, a formal written report of results shall be submitted to the University Representative for approval.

E. Factory test the following:

1. Verify that supply, return, and exhaust airflow rates are within the range of 100 percent to 110 percent of the scheduled CFM requirements when operating at scheduled design total static pressure and fan brake horsepower.
2. Verify that leakage (at the design pressure differentials) between the supply and return/exhaust is less than scheduled. Rotors shall be rotated at maximum speed when taking air flow measurements to determine leakage rates.
3. Calculate the Outside Air Correction Factor (as defined by AHRI 1060). Variation from design shall be the same allowance permitted by AHRI 1060.

PART 3 - EXECUTION

3.1 EXAMINATION AND PREPARATION

A. Store units protected from weather, dirt, water, and construction debris, and per manufacturer’s recommendations.

3.2 INSTALLATION

A. Install Energy Recovery Wheel assemblies in strict compliance with manufacturer's installation instructions and Related Sections. Maintain manufacturer's recommended clearances for service and maintenance.

B. Rig units with spreader bars and at adequate lifting points to prevent twisting and bending of the recovery wheel assembly.

C. Verify the orientation of the purge sector relative to the direction of the supply air stream.

D. Install rigid card board of plywood over both wheel faces to prevent media damage. Maintain this protection until the point the wheel is started for testing.

E. Install a complete set of filters of the same quality and efficiency as the specified permanent filters for the project, if the system into which the recovery wheel is installed is to be run for temporary service. Continuously maintain all filters and replace when pressure drop exceeds 1 inch w.c., or at manufacturer's recommended change-out pressure drop, whichever is lower.

F. The Test and Balance Contractor shall verify purge volumes and adjust the purge sector, if required, to achieve the required purge volumes. Before adjusting the purge sector consult with the wheel manufacturer for adjustment instructions.

3.3 START-UP

A. Provide a qualified service technician from the Manufacturer's staff to perform recovery wheel start-up, prior to any temporary use. Coordinate start-up of recovery wheel to occur in conjunction with air handler/energy recovery unit start-up. Coordinate visit with Test and Balance contractor. The manufacturer’s service technician shall perform the following tasks:

1. Verify correct installation of recovery wheel.
2. Grease bearings, verify motor direction and adjust belt tension if required.
3. Adjust recovery wheel seals.
4. Caulk all energy wheel components at locations recommended by the wheel manufacturer.
5. Verify purge volumes and cross wheel leakage in cooperation with the Test and Balance contractor. Adjust purge and make other corrections to achieve specified unit performance.
6. Perform any other manufacturer's recommended prestart activities.

7. Start-up wheel and verify proper operation. Verify that the rotor drive system when controlled by the variable speed drive operates across the entire speed range without motor, gear reducer, or belt problems.
8. Before leaving premises, provide the Owner’s representative a start-up report certifying that all start-up activities were completed and that the energy recovery wheel operates properly.

3.4 COMMISSIONING

A. Perform Commissioning activities per Related Sections above.

3.5 TRAINING

A. Provide a qualified service technician from the Manufacturer's staff to provide training.

B. Train Owner's maintenance personnel on start-up and shutdown, trouble-shooting, servicing and preventative maintenance procedures, minimum of 1 hour or 30 minutes per unit if multiple units were supplied. Review the data contained in the Operating and Maintenance Manuals with Owner's personnel. Training shall include belt and rotor seal adjustment, bearing greasing, motor, belt and bearing replacement, media removal, media cleaning methods, and a description of purge sector operation and what position the purge sector should be set at for the project’s particular application.

C. Schedule training with Owner with at least seven (7) days prior notice. Training and start up services are separate functions - training shall not be combined with startup services.

END OF SECTION 237213

UNIVERSITY OF MICHIGAN
ARCHITECTURE, ENGINEERING AND CONSTRUCTION

ARCHITECTURE & ENGINEERING
326 East Hoover, Mail Stop B
Ann Arbor, MI 48109-1002
Phone: 734-764-3414
Fax: 734-936-3334

BuildingName
The Description of the Project
P00000000 0000

SPECIFICATION DIVISION 23

NUMBER SECTION DESCRIPTION

DIVISION 23
SECTION 237323 - CUSTOM AIR HANDLING UNITS

END OF CONTENTS TABLE

DIVISION 23

SECTION 237323 - CUSTOM AIR HANDLING UNITS

REVISED TO REQUIRE CERTAIN PRODUCT DATA W/SUBMITTALS, AND TO ALLOW A SMOOTH FLOOR ILO A CHECKER PLATE FLOOR, ALL PER MECH TECH TEAM. D. KARLE, 7/29/08.

ADDED SPECIFICATION FOR HINGED PRIMARY RACK. MINOR IMPROVEMENTS TO ELECTRICAL AND TEMPERATURE CONTROL WIRING SECTION BY K. BIRRINGER AND D. KARLE, ALL 07/01/09.

REVISED TO ELIMINATE SEALTITE AND FIBERGLASS LIGHT FIXTURES DUE TO NEC CODE CHANGE. CLARIFIED FILTER REQUIREMENTS DURING TEMPORARY USE (3.1.J.) D. KARLE FOR MECH TECH TEAM, 3/26/10.

GENERAL IMPROVEMENT OF CONTENT ARRANGEMENT AND REVISION TO NEW FORMAT, MARCH 2011.

CORRECTED FORMATTING ERROR THAT HAD MADE SOUND TRANSMISSION LOSS DATA IN ARTICLE 2.5 APPLY TO EXTERIOR UNITS ONLY. D. KARLE 1-25-13.

AIR ENTERPRISES AND VENTROL ADDED AS APPROVED 3/26/13, PER HVAC MTT.

REVISED TO ALLOW THINNER ALUMINUM GAUGE FOR ALUMINUM FOAM PANELS PER MTT 7/11/13.

6/2015: REVISED 2.6.F.8 TO INDICATE WHEN COIL VENTS AND DRAINS ARE TO BE EXTENDED TO THE OUTSIDE OF THE CASING. D. KARLE PER HVAC MTT.

8/2015: REVISED TO ADD ASHRAE 111 TO 1.3 AND 2.8, TO ASSURE FACTORY AIR FLOW MEASUREMENTS ARE PERFORMED TO A RECOGNIZED STANDARD. ADDED TO 2.8 THAT FLOW PERFORMANCE DURING FACTORY TESTING MUST BE ACHIEVED AT SCHEDULED FAN BRAKE HP. D. KARLE PER HVAC MTT.

10/2015: ADD INGENIA TECHNOLOGIES AS APPROVED MFR. D. KARLE PER HVAC MTT.

PART 1 - GENERAL

REVISE CAREFULLY IF SPECIFICATION IS TO BE USED FOR PREPURCHASE; TO SPECIFY WHO PROVIDES FILTERS FOR THE AIR HANDLER IF IT WILL BE USED FOR TEMPORARY SERVICE. IT IS SUGGESTED THAT THE AIR HANDLER SUPPLIER PROVIDE ONE SET OF FILTERS, AND THE MECHANICAL CONTRACTOR RUNNING THE UNIT DURING TEMPORARY SERVICE PROVIDE THE ADDITIONAL FILTER SETS, SINCE IT IS UNKNOWN HOW MAY FILTER SETS WILL BE REQUIRED DURING TEMPORARY OPERATION. THIS SECTION SPECIFIES FILTERS SUPPLIED IN THIS MANNER (PER PART 2, MFR. SUPPLIES FILTERS WITH UNIT. PER PART 3, UNIT MUST BE TURNED OVER WITH NEW FILTERS).

THIS SPEC CANNOT BE USED STAND-ALONE FOR AIR HANDLERS! THE RELATED SPEC SECTIONS LISTED IN PART 1 MUST BE INCLUDED IN THE PROJECT SPEC BOOK TO PROVIDE THE COMPLETE REQUIREMENTS. HOWEVER, INFO IN THIS SECTION IS COMPLEMENTARY TO THOSE RELATED SECTIONS; THEREFORE DO NOT DELETE, FOR EXAMPLE INFO IN THIS SECTION REGARDING COILS, DRAIN PANS, FILTERS, ETC.

1.1 RELATED DOCUMENTS

INCLUDE PARAGRAPH 1.1.A AND B IN EVERY SPECIFICATION SECTION. EDIT RELATED SECTIONS 1.1.B TO MAKE IT PROJECT SPECIFIC.

A. Drawings and general provisions of the Contract, Standard General and Supplementary General Conditions, Division 1 Specification Sections, and other applicable Specification Sections including the Related Sections listed below, apply to this Section.

B. Related Sections:

1. Section 220500: Common Work Results for Mechanical.
2. Section 220513: Motors.
3. Section 220548: Vibration Control
4. Section 238216: Coils and Drain Pans
5. Section 233400: Fans
6. Section 234000: HVAC Air Cleaning Devices.
7. Section 233300: Air Duct Accessories and RGDs
8. Section 230900: Mechanical Systems Control
9. Section 230593: Testing, Adjusting, and Balancing.
10. Division 26: Electrical.

1.2 SUMMARY

A. Section Includes:

1. Custom built-up supply and return/exhaust air handling units.
2. Factory and field testing of custom air handling units.

1.3 QUALITY ASSURANCE

A. Manufacturers and Products: The products and manufacturers specified in this Section establish the standard of quality for the Work. Subject to compliance with all requirements, provide specified products from the manufacturers named in Part 2.

B. Reference Standards: Products in this section shall be built, tested, and installed in compliance with the following quality assurance standards; latest editions, unless noted otherwise.

1. ANSI/AHRI Standard 430 - Performance Rating of Central Station Air-Handling Units.
2. ANSI/AHRI Standard 260 - Sound Rating of Ducted Air Moving and Conditioning Equipment.
3. ASHRAE Standard 111 - Measurement, Testing, Adjusting and Balancing of Building Heating, Ventilation and Air-Conditioning Systems
4. NFPA 70 - National Electric Code.
5. NFPA 90A - Standard for the Installation of Air-Conditioning and Ventilating Systems

1.4 DELIVERY, STORAGE, AND HANDLING

A. Manufacturer shall provide shipping protection to insure that the interior and exterior of each unit is completely protected from dirt or weather. Duct and pipe openings shall be covered with sealed sheet metal, plastic or other durable means to ensure unit cleanliness is maintained.

B. Support coil headers independently during transport to prevent potential damage from vibration.

C. Restrain fans and other components to prevent damage during shipping.

1.5 ADMINISTRATIVE REQUIREMENTS

A. Provide a qualified service technician from the Manufacturer's staff to supervise installation and reconnection of unit sections and to perform start-up, testing and training as detailed in part 3.

1.6 SUBMITTALS

A. Submit the following product data for approval, for each unit:

1. Overall unit dimensions, weight, and center of gravity.
2. Ductwork connections including sizes, locations, and methods of connecting to mating ductwork.
3. Piping connections including size, material types, and dimensioned locations for each service.
4. Detail methods of sealing inner and outer walls at locations of pipe penetrations.
5. Locations and sizes of access doors.
6. Details of access door handles, latching mechanisms, hinges, and vision panels.
7. Locations of interior light fixtures and light switches.
8. Locations of electric power convenience receptacles.
9. Dimensions, weights and centers of gravity for each section when units will be shipped in multiple sections.
10. Cabinet material, metal thickness, finishes, insulation and accessories.
11. Details of vibration isolation bases including selections for vibration isolation springs.
12. Details of fan discharge flexible duct connector where required.
13. Details of motor and belt guards.
14. Motor ratings, electrical characteristics, and motor accessories.
15. Sound power data for the entire air-handling unit for each octave band at the following locations: At unit inlet, at unit discharge, and transmitted sound.
16. Factory testing procedure.
17. Factory test results.
18. Field test results.

REVISE WARRANTY PER PROJECT. LONGER WARRANTY PERIOD MAY BE APPROPRIATE FOR CERTAIN TYPES OF WORK. INCLUDE THIS ARTICLE IN EVERY SPECIFICATION SECTION.

1.7 WARRANTY

A. Provide a complete parts and labor warranty for a minimum of one year from the date of Substantial Completion.

PART 2 - PRODUCTS

2.1 MANUFACTURERS

A. Acceptable Manufacturers:

1. Buffalo Air Handling.
2. TMI Custom Air Systems.
3. Governair LLC.
4. Mafna Air Conditioning, Inc.
5. Air Flow Equipment.
6. Air Enterprises
7. Ventrol
8. Ingenia Technologies

2.2 GENERAL

A. Provide factory fabricated, double-wall air handling units with components and equipment as scheduled and detailed on Drawings.

B. Components shall be fabricated in major sections at the Manufacturer's factory and shall carry the Manufacturer's nameplate. Sections, after having framework completely installed on their base structures, shall be final assembled at factory into one-piece for testing and to ensure that sections will fit together properly when reassembled in the field.

C. Provide units of height, width, and length indicated, and that comply with project weight and spatial limitations.

1. Weight, spatial, and dimensional limitations shall also apply to individual sections, including to facilitate unit rigging and installation.

D. Provide a minimum of four lifting lugs per separately shipped section, of adequate strength to allow rigging without damage.

E. Manufacturer shall supply gasketing, sealant, and installation instructions.

F. Manufacturer shall provide touch-up paint(s) for use after field assembly.

G. Touch up all galvanized surfaces damaged from welding or other fabrication operations with zinc rich paint, minimum 65 percent metallic zinc by weight.

2.3 COMPONENTS- GENERAL REQUIREMENTS

A. Provide all components integral to the air handling unit including, but not limited to, the following. These components shall comply with Related Sections and any additional requirements of this Section.

EDIT THESE ITEMS FOR EACH PROJECT

1. Motors
2. Vibration Isolation
3. Coils and Drain Pans
4. Fans and Accessories
5. Air Filters
6. Sheet Metal Accessories
7. Dampers (as specified in Controls section)
8. Energy Recovery Wheels/Heat Exchangers
9. Sound Attenuators

2.4 MANUFACTURING

A. Casings shall be manufactured only after panel components (structural members, facing sheets and insulation) have been thoroughly cleaned of mill grease, dirt and oxidation.

1. Interior and exterior of panel system shall be thoroughly protected from contamination from the manufacturing process through start-up procedures and acceptance.
2. Internal components (fans, coils, air filter frames, equipment and piping) shall arrive from their respective manufacturing facilities free of grease and dirt.

B. In general, products such as sealants and gaskets, used within the unit, shall be non-petroleum based products, with no outgassing characteristics.

C. Equip, prepare, identify and match-mark individual shipping sections so that field reassembly and installation can be performed without reworking, interchanging, adjusting, springing, drilling new bolt holes, etc. All supplemental supplies necessary to assemble the unit shall be provided by the Manufacturer.

2.5 UNIT HOUSING

A. Performance

1. Maximum U-Value: 0.07
   a. Minimum insulation density (fiber glass): 3 lbs/sq. ft.
2. Under normal operating conditions there shall be no condensation on the exterior at 100 deg F db/74 deg F wb ambient.
3. Maximum deflection of walls shall be L/250 at plus or minus 10 in. w.c. (L = span in inches.).
4. Maximum deflection of roof and floor shall be L/250 at design loading. (L = span in inches).
   a. Minimum floor design load: 150 lbs/sq. ft.
   b. Minimum roof design load: 75 lbs/sq. ft. plus snow load for exterior unit.
5. Outdoor design conditions
   a. Minimum wind load: 120 mph.
   b. Minimum snow load: 50 lbs/sq. ft., or per applicable codes, whichever is greater.

REVISE SOUND TRANSMISSION LOSS DATA BELOW AS NECESSARY TO MEET PROJECT PERFORMANCE REQUIREMENTS, THE BELOW IS A GENERAL

GUIDELINE. ALSO FILL IN 64 AND 8000 HZ OCTAVE BANDS WHEN THESE FREQUENCIES ARE IMPORTANT TO PROJECT PERFORMANCE REQUIREMENTS.

6. Minimum sound transmission loss

Octave Band (Hz)	DB Reduction
--64	XX
--125	30
--250	42
--500	40
--1000	46
--2000	53
--4000	52
--8000	XX

B. Construction

1. Materials
   a. Exterior of unit: Galvanized steel (G-90), aluminum, or stainless steel
   b. Interior of unit: Solid galvanized steel (G-90) or aluminum
2. Minimum Panel Thickness: 4 inches. Minimum 2-inch panel construction with a foam insulation core that meets all the requirements of this specification, including sound transmission loss, is also permitted. Foam insulation shall be UL Class 1 rated.
3. Minimum Gauge: The following are minimum gauges. Heavier gauges may be required to meet the performance deflections and/or sound transmission loss specified, or to allow for proper welding:
   a. Roof interior and exterior: steel 16 ga. or aluminum 0.09” (0.040" aluminum for foam core insulated panels).
   b. Wall interior and exterior: steel 16 ga. or aluminum 0.09” (0.040" aluminum for foam core insulated panels).
   c. Floor interior: steel 10 gauge smooth or 1/8” checker plate or aluminum 1/8” checker plate.
   d. Floor exterior (bottom/underliner): steel 20 gauge or aluminum 0.063” (0.040" aluminum for foam core insulated panels).
   e. Partition walls: steel 16 ga. or aluminum 0.09” (0.040" aluminum for foam core insulated panels)
   f. Safing at cooling coils: stainless steel 18 ga. or aluminum 0.071”.
   g. Safing all other: steel 18 ga. or aluminum 0.071”.

4. Openings and penetrations
   a. On any piping subject to sweating, including condensate drains, piping penetrations shall be sleeved.
      1) Sleeve shall extend fully from interior to exterior of unit.
      2) Sleeve shall be continuously welded or seamless, rolled (round), and sealed airtight to unit.
      3) Provide rubber grommet or similar mechanical seal on unit interior and exterior to seal between sleeve and piping.
   b. All non-sweating piping or conduit penetrations shall be sealed airtight with rubber grommet or similar mechanical seal.

c. At openings, cover exposed edges of insulation with structural steel angles and seal edges.
d. Protect exposed fastener ends with plastic caps.
e. Floor penetrations shall incorporate a minimum 1 in. high waterproof dam fabricated of steel angle iron or equivalent, seal welded to floor.
f. For units located outside, no penetrations shall be made through the roof.

5. For units located outside, slope roof to prevent standing water.
6. Unit shipping sections shall be fabricated to have air and water tight connections. Seals between sections shall consist of 1/4 in. thick by minimum 1-1/2 in. wide neoprene gaskets and continuous caulking on contact surfaces.

C. Floor/Base Frame

1. Floor shall be continuously welded between mating sections and along wall edges to form a watertight surface. Watertight floor shall not be used as part of a coil drain pan system. Provide sleeves for any piping penetrating the unit; if through the floor, continuously weld to waterproof the floor.
2. Floor shall be min. 4 in. thick, insulated with 3-lb./cu. ft. density fiberglass (or 4 in. of U.L. Class 1 foam insulation of equivalent or better R-value), sealed airtight in place by solid galvanized or aluminum underliner.
3. Fabricate base frame of welded structural steel or aluminum members as required to accommodate drain outlet height requirements for proper drain pan trapping, and around the entire unit and under major internal equipment such that all components are completely supported by the factory installed base frame.

D. Ductwork Connections

1. Provide flanged connections with flanges extending a minimum of 2 in. past the outside wall of the unit.
2. For fans discharging directly at the unit casing, provide flexible duct connector internal to the unit.

E. Paint

1. Prior to assembly, prime coat all non-galvanized ferrous metal parts with two coats of lead-free prime paint.
   a. Quick-drying, rust-inhibitive, alkyd-based primer; total dry film thickness of not less than 1.3 mils.
   b. Paint: Benjamin Moore IronClad Alkyd Low Luster Metal and Wood Enamel C163, or equivalent.
2. For interior units, finish paint the same surfaces with two coats of enamel paint of a different color.
   a. Low-luster (eggshell), acrylic-latex, interior enamel; total dry film thickness of not less than 2.6 mils.
   b. Paint: Benjamin Moore Super Spec Latex Eggshell Enamel 274 or equivalent.
3. For exterior units, finish paint the same surfaces with two coats of enamel paint of a different color.
   a. Semi-gloss, alkyd, exterior enamel; total dry film thickness of not less than 2.6 mils.
   b. Paint: Benjamin Moore IronClad Alkyd Low Luster Metal and Wood Enamel 163 or equivalent.

4. Prepare surfaces per paint manufacturer's recommendations before painting.

F. Sealants:

1. Provide sealant that is non-toxic, including outgassing during curing period.
2. Sealant shall be warranted to maintain the leak-test performance for 25 years.

G. Access Doors and Panels

1. Access doors and panels shall be of same construction as unit housing, including insulation.
2. Doors shall be minimum 24 in. wide. Provide doors that are the full height of the unit, maximum 6' high.
3. Each access door and panel shall be equipped with continuous gaskets and shall fit in the door frame in a manner to guarantee the same leakage criteria as the unit casing.
4. Each access door shall be mounted with stainless steel or cast aluminum hinges and hardware. Provide a minimum of two cast aluminum handles per door, operable from either side.
5. Access doors in positive pressure sections shall open inward. Access doors in negative pressure sections shall open outward.
6. Each door shall contain a non-fogging thermal window of double pane safety glass. Coordinate height of window with housekeeping pads, base frame and isolators to ensure that location is at approximate eye level when standing outside of unit. Each window shall be a minimum 12 in. by 12 in., properly sealed to prevent condensation and to operate safely against positive or negative pressure.
7. Each access door shall have a built-in static pressure probe port.
   a. Ventlock Model 699 by Ventfabrics, Inc.
8. Removable access panels shall be provided in unit sections where components contained are larger than door opening and where access to components for cleaning and maintenance is required.

H. Outside and exhaust air openings

1. Outside air and exhaust openings shall be furnished with 25 mesh, galvanized steel or aluminum bird screen. Rain hood velocities shall not exceed 1,000 FPM.

SELECT BELOW IN COORDINATION WITH ARCHITECTURAL SPECIFICATIONS. ENSURE LOUVERS ARE NOT SPECIFIED IN ARCHITECTURAL DIVISIONS. DELETE THIS PARAGRAPH IF LOUVERS ARE SPECIFIED BY THE ARCHITECT.

I. Louvers

1. Provide louvers as shown and scheduled on Drawings. Louver airstream shall not entrain water or snow.
2. Louvers shall be self-draining.

2.6 COMPONENTS

MIXING OF OUTSIDE AIR AND RETURN AIR STREAMS SHOULD OCCUR OUTSIDE THE AIR HANDLER. AVOID MIXING BOXES WHICH ALMOST ALWAYS RESULT IN STRATIFICATION (FREEZE STAT TRIPPING) PROBLEMS.

A. Mixing Box Section

1. The outside and return airstreams shall be directed into each other in a mixing box by parallel blade damper assemblies oriented to facilitate mixing of the airstreams.
2. Outside and exhaust air openings shall not be on the same side of the unit in order to minimize recirculation, if air is exhausted at the unit.

B. Dampers

1. Provide dampers as specified in Related Section Mechanical Systems Controls.
2. In addition to the requirements in Mechanical Systems Controls, dampers designated as smoke dampers shall be labeled in accordance with the latest editions of UL 555S.

C. Filters

1. Provide filters and filter gauges of types as shown and scheduled on Drawings and as specified in Related Section.
2. Provide hinged primary filter frames where indicated, complying to the following:
   a. Primary filters shall be mounted on vertically hinged non-racking frames that are completely independent of the secondary filter frame. Frames shall swing away from the secondary filter frame in a door-like manner to allow secondary filter removal without removing the primary filters.
   b. Provide multiple hinged frames. Primary filter frames shall be no wider than 2 ft. Frames shall swing out on an arc of 90 degrees, or to the degree required to allow the secondary filters to be easily removed, whichever is greater.
   c. Frame hinges shall be continuous piano type.
   d. The primary filter frames shall be supported by galvanized structural steel support members. Arrange frame and support system relative to the secondary filters to provide a gap long enough to allow accurate measurement of static pressure between the two filter types with a static pressure tap.
   e. Frames shall be gasketed on all four sides. Provide spring type tension fasteners and latching system to lock and seal the hinged frames to the support members. Lock system shall be operable without tools.
   f. Primary filter frame and support system shall meet or exceed all of the performance requirements of the Related Section "Air Filters." Provide all accessories required by that section.

BLENDERS ARE NOT PREFERRED. MIXING OF OUTSIDE AIR AND RETURN AIR STREAMS SHOULD OCCUR OUTSIDE THE AIR HANDLER TO AVOID THE NEED FOR BLENDERS WHICH HAVE GENERALLY PROVEN TO BE INEFFECTIVE. SEE RELATED DESIGN GUIDELINE. IF BLENDERS MUST BE USED, CHANGE BELOW HIDDEN TEXT TO VISIBLE TEXT.

D. Blender Assembly

1. Blender assemblies shall be welded, rigid, vibration and deflection free, and adjustable; designed to impart a counter-rotational mixing to the air stream, producing a minimum standard deviation through a plane parallel with the blenders between entering air streams.
2. Mixing performance: Constant from 500 fpm to 2500 fpm blender velocity.
3. Minimum mixing effectiveness: 80 percent and plus or minus 5 deg F standard deviation when mixing 30 percent outdoor air and 70 percent return air at 50 degrees F inlet temperature differential. Capable of acceptable performance throughout entire operating range of unit, including system turndown.
4. Acceptable Manufacturers:
   a. RM Products
   b. Blender Products, Inc.

THE FOLLOWING SPECIFICATION FOR AN AIR TO AIR HEAT EXCHANGER (IN HIDDEN TEXT) IS PROVIDED FOR CONVENIENCE AND SHALL BE EDITED TO BE PROJECT SPECIFIC. "TURN ON" THIS TEXT IF REQUIRED.

E. Air-to-Air Heat Exchanger Section

1. Minimum capacities shall be as scheduled on the Drawings.
2. Heat exchanger shall be furnished as an integral part of the overall air-handling unit.
3. Heat exchanger shall be a cross-flow, fixed-plate exchanger with a diamond-shaped cross section. Plates shall be fabricated of aluminum and formed with profiles that maximize heat transfer and minimize pressure loss. Frames shall be constructed of galvanized steel and/or aluminum. Configuration shall allow for access and cleaning of each of the air pathways.
4. Furnish the heat exchanger with bypass dampers and a bypass air pathway to allow for the automatic prevention of frost formation on the plates. Provide dampers as specified in the Related Section "Mechanical Systems Controls".
5. Casing for the heat exchanger shall be constructed to the standards indicated elsewhere in this section for the overall air-handling unit. Provide baffle plates to seal and separate the two air streams from each other. Provide condensate drain pan(s) in compliance with Related Section, beneath the heat exchanger media.
6. Provide the air handling unit a total of 4 access sections at the inlet and discharge of each air path. Each access section shall be furnished with an access door.

F. Coils and drain pans

1. Provide preheat, energy recovery, heating, cooling coils and associated drain pans as shown and scheduled on Drawings and as specified in Related Sections.
2. Provide drain pans and drain connections for the following sections: cooling coils, humidifiers, and energy-recovery coils or wheels.
3. All coil assemblies shall be safed on top and bottom and at all coil splits.

4. Drain pans shall be sloped in a minimum of 2 planes to eliminate standing water and shall be stainless steel construction. Drain pans shall be constructed of adequate downstream length to collect any condensate that blows off the coil at air velocities up to the design air flow rate or 500 FPM, whichever is greater.
5. Insulate drains pans, including intermediate drain pans, to prevent sweating.

COILS MUST BE REMOVABLE VIA COIL TRACKS OR TROLLEY BEAMS. UM'S PREFERENCE IS COIL TRACKS SINCE IT IS DIFFICULT TO REMOVE THE TOP COIL IN A STACK WITH TROLLEY BEAMS. THEREFORE TROLLEY BEAMS ARE NOT MENTIONED BELOW. IF YOUR APPLICATION REQUIRES TROLLEY BEAMS, EDIT THE BELOW SECTION ACCORDINGLY.

6. Each coil section shall be removable without disruption to other unit components or coils. Fasten coil assemblies with bolts or screws; per manufacturer's recommendations, (welds or rivets are not acceptable). Provide coil tracks in assembly frame for removal of coil assemblies from housing.
7. Provide an individual access panel for each (stacked) coil section, to allow removal of a coil section without disrupting operation of coil sections located above or below the section being serviced. Example: a 3 coil high by 2 coil wide assembly shall have 3 access panels provided per side, for a total of 6.
8. Extend coil connections to the outside of the air handling unit casing to allow field connections. Extend vents and drains to the outside of the casing only when there is inadequate space inside the air handler to install them in a location that permits operation, including connection of a garden hose.
9. Label coil inlet, outlet, vent and drain piping connections with labels applied outside the casing. Vent or drain valves located inside units shall have labels inside the unit.

DIFFUSER PLATES ARE NOT PREFERRED. IT IS THE ENGINEER'S RESPONSIBILITY TO CONSIDER POSSIBLE STRATIFICATION ISSUES. USE DIFFUSER PLATE ONLY WHEN OTHER SOLUTIONS ARE NOT ACCEPTABLE.

G. Diffuser Plate

1. If air velocity across the cooling coil varies by more than 15 percent, provide a perforated, aluminum, sectionally-removable diffuser plate immediately upstream of the cooling coil section (plus or minus 6 in.). Diffuser plate shall completely cover cooling coil section and shall be rigid, vibration, and deflection free.

THIS SECTION SPECIFIES BACKWARD OR AIR FOIL STYLE FANS WHICH ARE PREFERRED IN MOST CASES. HOWEVER ON SOME SMALL AIR HANDLERS A FORWARD CURVED FAN MAY BE A MORE APPROPRIATE CHOICE, IN WHICH CASE EDIT THE BELOW. ALSO CONSIDER H.2 BELOW: SAFETY CAGES MAY NOT BE NECESSARY OR PRACTICAL FOR SMALL UNITS.

H. Fans and Accessories

1. Provide fans and accessories as shown and scheduled on Drawings and as specified in Related Section. Fans shall be backward inclined or air foil type.

2. When plenum/plug type fans are furnished provide a galvanized steel safety cage that entirely surrounds the fan wheel. Provide hinged or bolt-off sections large enough to allow bearing, motor, and belt replacement or service. Provide a safety cage of bolted panel construction that allows the cage to be easily disassembled and reassembled.

I. Trolley Beams

1. Provide fan sections with trolley beams where shown on the Drawings. Design and fabricate the unit structural members and housing to support the weight of the trolley beam fully loaded with the weight of the fan motor, trolley hoist, and chain. Trolley beams shall be centered on access doors or on removable component access panels, which shall be centered on fan motor or component. Beams shall be mounted to the ceiling and shall extend continuously from interior wall to interior wall. Trolley hoists and chain shall be provided "by others" in the future as needed.

J. Sound Attenuators

1. Provide sound attenuators where shown integral to air handling unit, as scheduled on Drawings and as specified in Related Section.

AIR HANDLERS ARE NOT SPECIFIED TO BE EQUIPPED WITH DISCONNECTS. DISCONNECTS ARE NOT TYPICALLY REQUIRED FOR FANS DRIVEN BY VFDS; SEE DESIGN GUIDELINE 220514 FOR MORE INFO. FOR FANS NOT DRIVEN BY VFDS, REQUIRE THE ELECTRICAL ENGINEER TO INDICATE A DISCONNECT. DISCONNECTS SHALL BE MOUNTED OUTSIDE FAN CASINGS.

2.7 ELECTRICAL AND TEMPERATURE CONTROL WIRING

1. Provide a junction box on the outside of the fan section casing for single point connection of external power wiring to each unit fan motor.
2. Provide EMT metal conduits and wiring between the junction boxes and the motor(s). Final connections to motors shall be 1/2 in. minimum flexible metal conduit with steel fittings.
3. For each unit section that has an access door, provide 120V 4-ft. dual tube fluorescent light fixture(s) consisting of industrial type metal fixture with 10 percent up-light, full depth end plates with wire guard, electronic ballast, T-8 lamps, and secured with a minimum of four fasteners. Similar to Lithonia type AF.
4. Provide a light switch with red pilot light adjacent to the latch side of the door for each lighted section. Pilot light shall be "on" when associated light fixture is "on". Provide one weatherproof, GFCI duplex convenience receptacle mounted centrally on the outside of unit, on the side with the most doors.
5. Provide a junction box on the outside of the unit for single point connection of external power wiring to the unit's lights and receptacle. Provide EMT conduit and wiring between the junction box, switches, associated lights and receptacle. Provide flexible conduit "whips" with wiring at section splits, for reconnection of the lighting circuit by the Electrical Contractor after sections are assembled.

6. Provide all electrical components in accordance with NFPA 70 (NEC) and Division 26 requirements. Indoor electrical enclosures shall be rated NEMA 1. Outdoor electrical enclosures shall be rated NEMA 3R.
7. Power and temperature control wiring shall be run in conduit.
   a. Run power and control wire in separate conduits.

2.8 SOURCE QUALITY CONTROL

A. Assemble and factory test each unit prior to shipping. Correct deficiencies in unit performance at the factory prior to shipping. University representatives shall witness testing and shall be notified of factory testing dates at least four (4) weeks in advance. Associated travel expenses for witnessing tests shall be paid for by the University.

B. Testing shall comply with ASHRAE Standard 111. Submit proposed test procedure to the University representative for approval, detailing methods, equipment, and techniques to be employed for each specific test. Equipment will not be considered approved until written approval of testing procedures is attained. Testing must also be in accordance with Quality Assurance Standards section.

C. At the conclusion of factory testing, a formal written report of results shall be submitted to the University Representative for approval.

D. Factory test each air handling unit as follows:

1. Verify that the airflow rate is within the range of 100 percent to 110 percent of scheduled CFM requirements when operating at scheduled design total static pressure and fan brake horsepower.
2. Airflow measuring devices shall be installed in ducts returning to or leaving the unit. These devices shall be installed per manufacturer's recommendations. External static pressure to the unit shall be simulated using a combination of ducts and dampers and must be equal to or greater than the scheduled external static pressure. Tests shall prove design airflow and static capability of the assembled unit.
3. Perform leakage tests to validate that the unit casing leakage is less than 1/2 percent of the scheduled design airflow (CFM) at 10 in. w.c.
   a. Positive Pressure Test: Duct openings in the positive pressure section shall be sealed. The CFM of the test fan shall be read using an approved airflow measuring device. When the static pressure developed by the test fan reaches 10 in., the fan CFM shall be read and this CFM shall be considered the casing leakage.
   b. Negative Pressure Test: Duct openings in the negative pressure section shall be sealed. The CFM of the test fan shall be read using an approved airflow measuring device. When the static pressure developed by the test fan reaches 10 in., the fan CFM shall be read and this CFM shall be considered the casing leakage.

4. Both the leakage and the airflow tests shall meet the required acceptance criterion without the use of temporary sealant at any permanent panel joints. Temporary sealing methods identical to those applied in field shall be used at the shipping splits to simulate "as installed" conditions.
5. Sound Test: System sound levels shall be measured at eight (8) octave bands at the scheduled design operating conditions. Airborne sound levels at openings shall be read in the test ductwork 5 ft. from openings. Transmitted sound levels shall be read 5 ft. from outside of fan sections or components, on all sides and on top.
   a. Readings shall be taken at all outside, return, exhaust and supply air openings.

PART 3 - EXECUTION

3.1 INSTALLATION

A. Use spreader bars with lifting cables and hoist sections from lifting lugs, to prevent cable damage to sections.

B. Rig individual sections under direct supervision of Unit Manufacturer's Representative.

C. Install on concrete housekeeping pad. Coordinate final pad size and location in field.

D. When indicated, install units on steel supports. Coordinate final location and placement of steel supports and ductwork connections in field.

E. Secure the unit to the housekeeping pad or steel supports with suitable anchors bolted through the unit's base rail. Prior to anchoring, level unit in all directions with stainless steel shims.

F. Shipping splits requiring field reconnection shall be made under the direct supervision of unit Manufacturer's Representative. Provide labor to reconnect utilities, piping, conduits and sheet metal sections of the unit. Openings to ductwork and piping shall remain protected and covered until unit assembly. Immediately after unit assembly, restore all factory protection. Maintain protection after assembly until just prior to final acceptance by Owner.

G. Make piping and duct connections, install filters and unit accessories, and complete all work required to place the unit into service. Connect vents and drains to non-ferrous coil headers with bronze or brass fittings.

MFR. START-UP SERVICE IS NOT GENERALLY NECESSARY EXCEPT FOR UNITS OF NEW DESIGN OR OF PARTICULAR COMPLEXITY. THEREFORE, THE PARAGRAPH BELOW SHOULD NORMALLY BE DELETED. IF START-UP SERVICES ARE REQUIRED, PROVIDE EXPANDED DETAIL REGARDING WHAT IS TO BE PERFORMED BY THE MFR.'S TECHNICIAN.

3.2 START-UP

A. Provide a qualified service technician from the Manufacturer's staff to perform unit start-up. This start-up service shall be provided prior to commissioning activities, and prior to any temporary use.

3.3 TEMPORARY USE OF AIR HANDLING UNITS

A. Thoroughly clean unit of all grease, dirt, dust, etc.

B. Prior to placement into temporary service:

1. Perform manufacturer's pre-start protocol.
2. Perform commissioning activities.

C. Perform all manufacturer's required routine maintenance procedures during temporary service. Continuously maintain a log of such procedures. Store log at unit during temporary use period and include log as part of the final O&M manual.

D. While operating the air handler for temporary use, install a complete set of filters in the air handling unit of the same quality and efficiency as the specified permanent filters for the project.

BELOW PARAGRAPH REQUIRES MINIMUM MERV 8 FILTERS TO PROTECT DUCT WORK DURING CONSTRUCTION, WHICH MATCHES LEED REQUIREMENTS AND IS RECOMMENDED FOR NON-LEED PROJECTS AS WELL.

SOME SPECIALTY INSTALLATIONS (E.G. CLEAN ROOM OR CLEAN-ROOM-LIKE SPACES) MAY REQUIRE THAT TEMPORARY DUCTWORK FILTERS BE EQUIVALENT TO SECONDARY FILTER PERFORMANCE. IF THAT IS THE CASE, REVISE BELOW ACCORDINGLY.

E. Provide temporary filters, minimum MERV 8, to protect all ductwork and building contents when unit is operated during construction. Filters shall have an equal or better performance rating than primary filters specified for permanent use in order to prevent construction dirt infiltration into the air handling unit systems.

F. Continuously maintain all filters and replace when pressure drop exceeds 1 inch w.c., or at manufacturer's recommended change-out pressure drop, whichever is lower.

3.4 FIELD QUALITY CONTROL

A. Units shall undergo air and water balance and vibration testing per Related Section Testing, Adjusting and Balancing.

B. Each unit shall be field tested. Deficiencies related to manufacture or installation shall be corrected without cost to Owner.

1. The unit Manufacturer shall correct and pay for the repair of deficiencies found during testing, except for leaks found at unit section joints, which shall be the responsibility of the Contractor to repair.

BE AWARE THAT THE MANUFACTURER WILL HAVE PROVIDED A UNIT THAT PASSED THE FOLLOWING TEST PROCEDURE IN THE FACTORY. ASSUMING THE UNIT IS ACCEPTED ON SITE BY THE CONTRACTOR WITH NO SHIPPING

DAMAGE, RESPONSIBILITY FOR ANY DEFICIENCIES FOUND DURING FIELD TESTING WILL LIKELY FALL TO THE INSTALLING CONTRACTOR.

2. Perform leakage tests after reassembly of unit sections to validate that the unit casing leakage is less than 1/2 percent of the scheduled design air flow (CFM) at 10 in. w.c.
   a. Positive Pressure Test: Duct openings in the positive pressure section shall be sealed. The CFM of the test fan shall be read using an approved airflow measuring device. When the static pressure developed by the test fan reaches 10 in., the fan CFM shall be read and this CFM shall be considered the casing leakage.
   b. Negative Pressure Test: Duct openings in the negative pressure section shall be sealed. The CFM of the test fan shall be read using an approved airflow measuring device. When the static pressure developed by the test fan reaches 10 in., the fan CFM shall be read and this CFM shall be considered the casing leakage.
   c. At the conclusion of field tests, a formal written report of results shall be submitted to the University Representative for approval.

INCLUDE THIS ARTICLE IN EVERY SPECIFICATION SECTION.

3.5 COMMISSIONING

A. Perform the commissioning activities as outlined in the Division 01 Section Commissioning and other requirements of the Contract Documents.

3.6 ADJUSTING, CLEANING, PROTECTION

A. After unit has completed any temporary service and just prior to final acceptance by Owner, contractor shall:

1. Thoroughly clean unit of all grease, dirt, dust, etc., lubricate bearings, align and tighten belts, and perform manufacturer's pre-start protocol
2. Install a new, complete set of filters.
3. Perform all commissioning activities, even if previously performed to ready for temporary service.
4. Touch up damaged galvanized surfaces with zinc rich paint, minimum 65 percent metallic zinc by weight.
5. Touch up damaged painted surfaces with manufacturer provided touch-up paint.

MFR. TRAINING SERVICE IS NOT GENERALLY NECESSARY EXCEPT FOR UNITS OF NEW DESIGN OR OF PARTICULAR COMPLEXITY. THEREFORE, THE PARAGRAPHS BELOW SHOULD NORMALLY BE DELETED. IF TRAINING SERVICES ARE REQUIRED, PROVIDE EXPANDED DETAIL REGARDING WHAT IS TO BE COVERED DURING TRAINING. .

3.7 OWNER TRAINING

A. Provide a qualified service technician from the Manufacturer's staff to provide training.

B. Train Owner's maintenance personnel on start-up and shutdown, trouble-shooting, servicing and preventative maintenance procedures, minimum of 2 hours or 1 hour per unit if multiple units were supplied. Review the data contained in the Operating and Maintenance Manuals with Owner's personnel.

C. Schedule training with Owner through the Project Construction Manager with at least seven (7) days prior notice. Training and start up services are separate functions - training shall not be combined with startup services.

END OF SECTION 237323

UNIVERSITY OF MICHIGAN
ARCHITECTURE, ENGINEERING AND CONSTRUCTION

ARCHITECTURE & ENGINEERING
326 East Hoover, Mail Stop B
Ann Arbor, MI 48109-1002
Phone: 734-764-3414
Fax: 734-936-3334

BuildingName
The Description of the Project
P00000000 0000

SPECIFICATION DIVISION 23

NUMBER SECTION DESCRIPTION

DIVISION 23
SECTION 237324 - SEMI-CUSTOM AIR HANDLING UNITS

END OF CONTENTS TABLE

DIVISION 23

SECTION 237324 - SEMI-CUSTOM AIR HANDLING UNITS

REVISED NAME FROM "MODULAR" TO "SEMI-CUSTOM" AIR HANDLING UNITS AT THE REQUEST OF THE HVAC/CONTROLS GROUP. D. KARLE 4/14/08.

REVISED TO REQUIRE CERTAIN PRODUCT DATA W/SUBMITTALS, AND AIR-TO-AIR HX SPEC., ALL PER MECH TECH TEAM. D. KARLE, 7/29/08.

MINOR IMPROVEMENTS TO ELECTRICAL AND TEMPERATURE CONTROL WIRING SECTION BY K. BIRRINGER AND D. KARLE, 7/1/09

REMOVED REFERENCE TO AHRI 410, WHICH IS COVERED IN 238216. D. KARLE FOR MECH TECH TEAM 9/11/09.

REVISED TO ELIMINATE SEALTITE AND FIBERGLASS LIGHT FIXTURES DUE TO NEC CODE CHANGE. CLARIFIED FILTER REQUIREMENTS DURING TEMPORARY USE. D. KARLE FOR MECH TECH TEAM, 3/26/10.

GENERAL IMPROVEMENT OF CONTENT ARRANGEMENT AND REVISION TO NEW FORMAT, MARCH 2011.

THERMAL CORP AND VENTROL ADDED AS APPROVED 3/26/13, PER HVAC MTT.

8/2015: ADDED SPEC EDITORS NOTE UNDER PART 1 REGARDING ENERGY WHEELS. D. KARLE PER HVAC MTT.

11/2015: ADDED INGENIA AS APPROVED MFR. D. KARLE PER HVAC MTT.

PART 1 - GENERAL

AIR HANDLERS COVERED BY THIS SPECIFICATION ARE NON-CUSTOM TYPE FOR LIGHT TO MEDIUM DUTY USE.

REVISE CAREFULLY IF SPECIFICATION IS TO BE USED FOR PREPURCHASE; TO SPECIFY WHO PROVIDES FILTERS FOR THE AIR HANDLER IF IT WILL BE USED FOR TEMPORARY SERVICE. IT IS SUGGESTED THAT THE AIR HANDLER SUPPLIER PROVIDE ONE SET OF FILTERS, AND THE MECHANICAL CONTRACTOR RUNNING THE UNIT DURING TEMPORARY SERVICE PROVIDE THE ADDITIONAL FILTER SETS, SINCE IT IS UNKNOWN HOW MAY FILTER SETS WILL BE REQUIRED DURING TEMPORARY OPERATION. THIS SECTION SPECIFIES FILTERS SUPPLIED IN THIS MANNER (PER PART 2, MFR. SUPPLIES FILTERS WITH UNIT. PER PART 3, UNIT MUST BE TURNED OVER WITH NEW FILTERS).

THIS SPEC CANNOT BE USED STAND-ALONE FOR AIR HANDLERS! THE RELATED SPEC SECTIONS LISTED IN PART 1 MUST BE INCLUDED IN THE PROJECT SPEC BOOK TO PROVIDE THE COMPLETE REQUIREMENTS. HOWEVER, INFO IN THIS SECTION IS COMPLEMENTARY TO THOSE RELATED SECTIONS; THEREFORE DO NOT DELETE, FOR EXAMPLE INFO IN THIS SECTION REGARDING COILS, DRAIN PANS, FILTERS, ETC.

U-M HAS EXPERIENCED ONGOING ISSUES WITH LEAKAGE BETWEEN SUPPLY AND EXHAUST AIR STREAMS ON AIR HANDLERS EQUIPPED WITH ROTARY

AIR-TO-AIR ENERGY RECOVERY WHEELS (HIGHER THAN PREDICTED BY MFR.S). THEREFORE IT IS GENERALLY RECOMMENDED THAT AIR HANDLERS EQUIPPED WITH THESE DEVICES BE SPECIFIED AS CUSTOM AIR HANDLERS SO THAT THE UNITS ARE FACTORY TESTED. IF SEMI-CUSTOM AIR HANDLERS ARE TO BE SPECIFIED WITH THESE DEVICES, THE DESIGNER SHOULD CONSIDER ADDING FACTORY TESTING (WHICH CAN BE COPIED FROM THE CUSTOM AHU SPEC) TO THIS SECTION.

1.1 RELATED DOCUMENTS

INCLUDE PARAGRAPH 1.1.A AND B IN EVERY SPECIFICATION SECTION. EDIT RELATED SECTIONS 1.1.B TO MAKE IT PROJECT SPECIFIC.

A. Drawings and general provisions of the Contract, Standard General and Supplementary General Conditions, Division 1 Specification Sections, and other applicable Specification Sections including the Related Sections listed below, apply to this Section.

B. Related Sections:

1. Section 220500: Common Work Results for Mechanical.
2. Section 220513: Motors.
3. Section 220548: Vibration Control
4. Section 238216: Coils and Drain Pans
5. Section 233400: Fans
6. Section 234000: HVAC Air Cleaning Devices
7. Section 233300: Air Duct Accessories and RGDs
8. Section 230900: Mechanical Systems Control
9. Section 230593: Testing, Adjusting, and Balancing.
10. Division 26: Electrical.

1.2 SUMMARY

A. Section Includes:

1. Air handling units of semi-custom construction consisting of modular sections.

1.3 QUALITY ASSURANCE

A. Manufacturers and Products: The products and manufacturers specified in this Section establish the standard of quality for the Work. Subject to compliance with all requirements, provide specified products from the manufacturers named in Part 2.

B. Reference Standards: Products in this section shall be built, tested, and installed in compliance with the following quality assurance standards; latest editions, unless noted otherwise.

1. ANSI/AHRI Standard 430. Performance Rating of Central Station Air-Handling Units.
2. AHRI Standard 260- Sound Rating of Ducted Air Moving and Conditioning Equipment.
3. NFPA 70 National Electric Code.
4. NFPA 90A: Standard for the Installation of Air-Conditioning and Ventilating Systems

1.4 DELIVERY, STORAGE, AND HANDLING

A. Manufacturer shall provide shipping protection to insure that the interior and exterior of each unit is completely protected from dirt or weather. Duct and pipe openings shall be covered with sealed sheet metal, plastic or other durable means to ensure unit cleanliness is maintained.

B. Support coil headers independently during transport to prevent potential damage from vibration.

C. Restrain fans and other components to prevent damage during shipping.

1.5 SUBMITTALS

A. For each unit, submit for approval, the following product data:

1. Overall unit dimensions, weight, and center of gravity.
2. Ductwork connections including sizes, locations, and methods of connecting to mating ductwork.
3. Piping connections including size, material types, and dimensioned locations for each service.
4. Detail methods of sealing inner and outer walls at locations of pipe penetrations.
5. Locations and sizes of access doors.
6. Details of access door handles, latching mechanisms, hinges, and vision panels.
7. Locations of interior light fixtures and light switches.
8. Locations of electric power convenience receptacles.
9. Dimensions, weights and centers of gravity for each section when units will be shipped in multiple sections.
10. Cabinet material, metal thickness, finishes, insulation and accessories.
11. Details of vibration isolation bases including selections for vibration isolation springs.
12. Details of fan discharge flexible duct connector where required.
13. Details of motor and belt guards.
14. Motor mfg., ratings, electrical characteristics, and motor accessories.
15. Sound power level data per AHRI Standard 260.

REVISE WARRANTY PER PROJECT. LONGER WARRANTY PERIOD MAY BE APPROPRIATE FOR CERTAIN TYPES OF WORK. INCLUDE THIS ARTICLE IN EVERY SPECIFICATION SECTION.

1.6 WARRANTY

A. Provide a complete parts and labor warranty for a minimum of one year from the date of Substantial Completion.

PART 2 - PRODUCTS

2.1 MANUFACTURERS

A. Acceptable Manufacturers:

1. Buffalo Air Handling.
2. TMI Custom Air Systems.
3. Governair LLC.
4. Mafna Air Conditioning, Inc.
5. Air Flow Equipment.
6. Trane.
7. McQuay
8. Thermal Corporation
9. Ventrol
10. Ingenia

2.2 GENERAL

A. Provide factory fabricated, double-wall air handling units with components and equipment as scheduled and detailed on Drawings.

B. Components shall be fabricated in major sections at the Manufacturer's factory and shall carry the Manufacturer's nameplate.

C. Provide units of height, width, and length indicated, and that comply with project weight and spatial limitations.

1. Weight, spatial, and dimensional limitations shall also apply to individual sections, including facilitate unit rigging and installation.

D. Provide a minimum of four lifting lugs per separately shipped section, of adequate strength to allow rigging without damage.

E. Manufacturer shall supply gasketing, sealant, and installation instructions.

F. Manufacturer shall provide touch-up paint(s) for use after field assembly.

G. Touch up all galvanized surfaces damaged from welding or other fabrication operations with zinc rich paint, minimum 65 percent metallic zinc by weight.

2.3 COMPONENTS- GENERAL REQUIREMENTS

A. Provide all components integral to the air handling unit including, but not limited to, the following. These components shall comply with Related Sections and any additional requirements of this Section.

EDIT THESE ITEMS FOR EACH PROJECT

1. Motors
2. Vibration Isolation
3. Coils and Drain Pans
4. Fans and Accessories
5. Air Filters
6. Sheet Metal Accessories
7. Dampers (as specified in Controls section)
8. Energy Recovery Wheels/Heat Exchangers
9. Sound Attenuators

2.4 MANUFACTURING

A. Casings shall be manufactured only after panel components (structural members, facing sheets and insulation) have been thoroughly cleaned of mill grease, dirt and oxidation.

1. Interior and exterior of panel system shall be thoroughly protected from contamination from the manufacturing process through start-up procedures and acceptance.
2. Internal components (fans, coils, air filter frames, equipment and piping) shall arrive from their respective manufacturing facilities free of grease and dirt.

B. In general, products such as sealants and gaskets, used within the unit, shall be non-petroleum based products, with no outgassing characteristics.

C. Equip, prepare, identify and match-mark individual shipping sections so that field reassembly and installation can be performed without reworking, interchanging, adjusting, springing, drilling new bolt holes, etc. All supplemental supplies necessary to assemble the unit shall be provided by the Manufacturer.

2.5 UNIT HOUSING

A. Maximum Casing Leakage (inclusive of all components):

1. Shall not exceed 1 percent of the scheduled design air flow at 6 in. wg positive or 4 in. wg negative static pressure, or:
2. 1 percent of the scheduled design air flow at the scheduled casing pressure ratings, when such ratings are scheduled.

B. Construction

1. The unit shall be constructed of modules with a complete frame with removable side and bottom panels. Frame-less construction with removable panels for coil and fan access may also be supplied. For either type construction, removal of panels shall not affect the structural integrity of the unit.
2. The unit shall be equipped with a base rail or similar support structure so that the bottom of the unit does not rest directly on the housekeeping pad or floor. The base rail/supports shall be designed to allow the unit to be leveled with shims and anchored to the pad or floor.
3. Minimum wall panel thickness shall be 2 in.

IF CONDITIONS WARRANT, SELECT THE SPECIFIC CASING MATERIAL BY EDITING B.4, OTHERWISE THE MFG. MAY PROVIDE ANY OF THE 3 LISTED.

4. Interior and exterior casing shall be G-90 galvanized steel, aluminum, stainless steel, or as scheduled.
5. The casing shall be able to withstand up to 6 in. wg positive or 4 in. wg negative static pressure, or as scheduled.
6. Maximum deflection of walls, floors, and roof shall be L/250 (L = span in inches.), under the following conditions:
   a. Wall deflection maximums are at 6 in. wg positive or 4 in. wg negative static pressure, or at scheduled pressures. .
   b. Floor deflection maximum: 150 lbs. /sq. ft.
   c. Roof deflection maximum: 75 lbs/sq. ft. plus snow load
7. Outdoor design conditions:
   a. Minimum wind load: 120 mph.

b. Minimum snow load: 50 lbs/sq ft or per code, whichever is greater.

8. Modules shall be factory-insulated. Insulate walls, roof, and entire bottom, including below drain pans. Insulation and insulation adhesive shall comply with NFPA-90A requirements for flame spread and smoke generation and be rated UL Class 1. Insulation adhesive shall be UL-listed.

SELECT EITHER SOLID (B.9) OR PERFORATED (B.10) INNER WALL. AVOID PERFORATED WALLS WHENEVER POSSIBLE.

9. Module panels shall be of double-wall construction to facilitate cleaning of the unit interior. The interior wall shall be solid. Fiberglass insulation shall be 3 lbs./cu.ft. density. Insulation thermal resistance R shall be a minimum of 8.33 $ft^2 \cdot h \cdot °F/Btu$.
10. Module panels shall be of double wall construction, fabricated from solid wall at cooling coils and humidifiers with the balance of the inner wall perforated to enhance acoustical performance. Foam insulation shall not be used behind perforated panels. Configure perforation spacing and hole size to prevent insulation breakaway, flake off, or delamination when tested at 9,000 fpm, in accordance with UL Standard 181. Thermal resistance R shall be 8.33 $ft^2 \cdot h \cdot °F/Btu$.

C. Ductwork Connections

1. Provide flanged connections with flanges extending a minimum of 2 in. past the outside wall of the unit.

D. Roof

1. For units located inside, roof performance shall match all panel performance requirements.
2. For units located outside, no penetrations shall be made through roof. Slope roof to prevent standing water.

E. Paint

1. Prior to assembly, paint all non-galvanized ferrous metal parts with two coats of lead-free rust-inhibitive, alkyd-based primer paint.
2. For exterior units, paint exterior surfaces with two coats of alkyd exterior enamel paint. Properly prepare all surfaces prior to painting according to paint manufacturer's instructions.

F. Access Doors and Panels

1. Access doors and panels shall be of same construction as unit housing, including insulation.
2. Doors shall be minimum 18 in. wide, 24 in. wide is preferred, or widths as indicated on drawings. Provide doors that are the full height of the unit, maximum 6ft. high.
3. Each access door and panel shall be equipped with continuous gaskets and shall fit in the door frame in a manner to guarantee the unit’s specified leakage criteria.
4. Hinges and hardware shall be galvanized, stainless steel or aluminum. Outdoor unit hardware shall be stainless steel, or aluminum. At least 2 handles per door, operable from either side, shall be provided.

5. Access doors in positive pressure sections shall open inward. Access doors in negative pressure sections shall open outward.

STRIKE THE FOLLOWING IF DOOR WINDOWS ARE NOT TO BE PROVIDED.

6. Unless otherwise noted, each door shall contain a safety glass window. Provide double pane non-fogging thermal windows downstream of cooling coils, single or double pane non-fogging type elsewhere. Each window shall be a minimum 6 in. by 6 in. properly sealed to prevent leakage and condensation, and be able to operate safely against the unit's positive and negative pressure capabilities.
7. Removable access panels shall be provided in unit sections where components contained are larger than the respective access module door opening.

G. Outside and exhaust air openings

1. Outside air and exhaust openings shall be furnished with 25 mesh, galvanized bird screen. Rain hood velocities shall not exceed 1000 FPM.

2.6 COMPONENTS

SELECT LOUVERS IN COORDINATION WITH ARCHITECT. ENSURE LOUVERS ARE NOT ALREADY SPECIFIED IN ARCH DIVISIONS. DELETE THE PARAGRAPH BELOW IF LOUVERS ARE SPECIFIED BY THE ARCHITECT.

A. Louvers

1. Provide louvers as shown and scheduled on drawings. Louver airstream shall not entrain water or snow.
2. Louvers shall be self-draining.

MIXING OF OUTSIDE AIR AND RETURN AIR STREAMS SHOULD OCCUR OUTSIDE THE AIR HANDLER. AVOID MIXING BOXES WHICH ALMOST ALWAYS RESULT IN STRATIFICATION (FREEZE STAT TRIPPING) PROBLEMS.

B. Mixing Box Section

1. The outside and return airstreams shall be directed into each other in a mixing box by parallel blade damper assemblies oriented to facilitate mixing of the airstreams.

C. Face and Bypass Modules

1. Face and bypass modules shall be provided as shown on the drawings.
2. Bypass shall be the external type, routed to a factory fabricated opening located downstream of all coils. The pressure drop through the bypass shall be equal to the pressure drop through the coils.
3. Dampers shall be opposed blade at the coil and either opposed or parallel blade at the bypass. Dampers shall be mechanically linked together.
4. Damper construction shall be per the Related Section.

D. Dampers

1. Provide dampers as specified in Related Section Mechanical Systems Controls.

2. In addition to the requirements in Mechanical Systems Controls, dampers designated as smoke dampers shall be labeled in accordance with the latest editions of UL 555S.

E. Sound Attenuators

1. Provide sound attenuators where shown integral to air handling unit, as scheduled on Drawings and as specified in Related Section.

F. Filters

1. Provide filters and filter gauges of types as shown and scheduled on drawings and as specified in Related Section.

BLENDERS ARE NOT PREFERRED. MIXING OF OUTSIDE AIR AND RETURN AIR STREAMS SHOULD OCCUR OUTSIDE THE AIR HANDLER TO AVOID THE NEED FOR BLENDERS WHICH HAVE GENERALLY PROVEN TO BE INEFFECTIVE.

G. Blender Assembly

1. Blender assemblies shall be welded, rigid, vibration and deflection free, and adjustable; designed to impart a counter-rotational mixing to the air stream, producing a minimum standard deviation through a plane parallel with the blenders between entering air streams.
2. Mixing performance: Constant from 500 fpm to 2,500 fpm blender velocity.
3. Minimum mixing effectiveness: 80percent and +/- 5 deg F standard deviation when mixing 30percent outdoor air/70percent return air at 50 deg F inlet temperature differential. Capable of acceptable performance throughout entire operating range of unit, including system turndown.
4. Blender material shall be the same as the casing interior material.
5. Acceptable Manufacturers:
   a. RM Products
   b. Blender Products, Inc.

THE FOLLOWING SPECIFICATION FOR AN AIR TO AIR HEAT EXCHANGER (IN HIDDEN TEXT) IS PROVIDED FOR CONVENIENCE AND SHALL BE EDITED TO BE PROJECT SPECIFIC. "TURN ON" THIS TEXT IF REQUIRED.

H. Air-to-Air Heat Exchanger Section

1. Minimum capacities shall be as scheduled on the Drawings.
2. Heat exchanger shall be furnished as an integral part of the overall air-handling unit.
3. Heat exchanger shall be a cross-flow, fixed-plate exchanger with a diamond-shaped cross section. Plates shall be fabricated of aluminum and formed with profiles that maximize heat transfer and minimize pressure loss. Frames shall be constructed of galvanized steel and/or aluminum. Configuration shall allow for access and cleaning of each of the air pathways.
4. Furnish the heat exchanger with bypass dampers and a bypass air pathway to allow for the automatic prevention of frost formation on the plates. Provide dampers as specified in the Related Section "Mechanical Systems Controls".

5. Casing for the heat exchanger shall be constructed to the standards indicated elsewhere in this section for the overall air-handling unit. Provide baffle plates to seal and separate the two air streams from each other. Provide condensate drain pan(s) in compliance with Related Section, beneath the heat exchanger media.
6. Provide the air handling unit a total of 4 access sections at the inlet and discharge of each air path. Each access section shall be furnished with an access door.

I. Coils and drain pans

1. Provide preheat, energy recovery, heating, cooling coils and associated drain pans as shown and scheduled on Drawings and as specified in Related Sections.
2. Provide drain pans and drain connections for the following sections: cooling coils, humidifiers, and energy-recovery coils or wheels.
3. All coil assemblies shall be safed on top and bottom and at all coil splits.
4. Drain pans shall be sloped in a minimum of 2 planes to eliminate standing water and shall be stainless steel construction. Drain pans shall be constructed of adequate downstream length to collect any condensate that blows off the coil at air velocities up to the design air flow rate or 500 FPM, whichever is greater.
5. Insulate drains pans, including intermediate drain pans, to prevent sweating.
6. All coil assemblies shall be removable without disruption to other unit components or coils. Fasten coil assemblies with bolts or screws per manufacturer's recommendations (welds or rivets are not acceptable).
7. Extend coil connections, vents and drains to the outside of the air handling unit casing to allow field connections.
8. Label coil inlet, outlet, vent and drain piping connections with labels applied outside the casing.

J. Diffuser Modules:

1. A diffuser module shall be provided immediately downstream of the fan module on blow through units. The diffuser shall provide equal air distribution to components immediately downstream of the diffuser. Diffusers shall be made of G90 galvanized steel, stainless steel, or aluminum.

THIS SECTION SPECIFIES BACKWARD OR AIR FOIL STYLE FANS WHICH ARE PREFERRED IN MOST CASES. HOWEVER ON SOME SMALL AIR HANDLERS A FORWARD CURVED FAN MAY BE A MORE APPROPRIATE CHOICE, IN WHICH CASE EDIT THE BELOW.

K. Fans and Accessories

1. Provide fans and accessories as shown and scheduled on drawings and as specified in Related Section. Fans shall be backward inclined or air foil type.

2. When plenum/plug type fans are furnished provide a galvanized steel safety cage that entirely surrounds the fan wheel. Provide hinged or bolt-off sections large enough to allow bearing, motor, and belt replacement and service. Provide a safety cage of bolted panel construction that allows the cage to be easily disassembled and reassembled.
3. Isolate the fan from the unit casing by flexible duct connection(s) and a spring isolation base

THIS SECTION REQUIRES ACCESS SECTIONS BE PROVIDED TO ALLOW BOTH UP AND DOWNSTREAM ACCESS TO EVERY MODULE COMPONENT. THE DESIGNER MUST ACCOMMODATE THESE ACCESS SECTIONS WHEN FITTING UNITS INTO THE AVAILABLE SPACE.

L. Access/Inspection Sections: Modules shall include an access section complete with a double-wall door. Access sections shall be provided to allow up and down stream access to every module component.

CONSIDER MOISTURE ELIMINATORS WHEN LESS THAN IDEAL CONDITIONS EXIST AT OUTSIDE AIR INTAKES OR HUMIDIFIERS.

M. Moisture Eliminator Module

1. A module consisting of a vertically mounted, maintenance-free moisture eliminator shall be provided. The moisture eliminator shall consist of “sine-wave” fins or stainless steel mesh for effective moisture removal.
2. Moisture eliminators shall be made of stainless steel or aluminum, of rigid construction, and be vibration and deflection free.

AIR HANDLERS ARE NOT SPECIFIED TO BE EQUIPPED WITH DISCONNECTS. DISCONNECTS ARE NOT TYPICALLY REQUIRED FOR FANS DRIVEN BY VFDS; SEE DESIGN GUIDELINE 220514 FOR MORE INFO. FOR FANS NOT DRIVEN BY VFD'S, REQUIRE THE ELECTRICAL ENGINEER TO INDICATE A DISCONNECT. DISCONNECTS SHALL BE MOUNTED OUTSIDE FAN CASINGS.

N. Electrical and Temperature Control Wiring

1. Provide a junction box on the outside of the fan section casing for single point connection of external power wiring to each unit fan motor.
2. Provide EMT and flexible metal conduits and wiring between the junction boxes and the motor(s). Final connections to motors shall be 1/2" minimum flexible metal conduit with steel fittings.
3. For each unit section that has an access door, provide a 120V compact fluorescent light fixture complete with vapor-tight globe, aluminum globe guard, and rough service lamp. For units wider and taller than 6ft., provide for each section a 4ft. dual tube fluorescent light consisting of industrial type metal fixture with 10percent up-light, full depth end plates with wire guard, electronic ballast, T-8 lamps, and secured with a minimum of four fasteners. Similar to Lithonia type AF.
4. Provide a light switch with red pilot light adjacent to the latch side of the fan door to control all of the unit’s lights. Pilot light shall be "on" when associated light fixture is "on."

5. Provide a junction box on the outside of the unit for single point connection of external power wiring to the unit's lights. Provide EMT conduit and wiring between the junction box, switch, and associated lights. Provide flexible conduit "whips" with wiring at section splits, for reconnection of the lighting circuit by the Electrical Contractor after sections are assembled.
6. Provide all electrical components in accordance with NFPA 70 (NEC) and Division 26 requirements. Indoor electrical enclosures shall be rated NEMA 1. Electrical enclosures located outdoors shall have a NEMA 3R rating.
7. All electrical and temperature control wiring shall be run in conduit.

PART 3 - EXECUTION

3.1 INSTALLATION

A. Use spreader bars with lifting cables and hoist sections from lifting lugs, to prevent cable damage to sections.

B. Install on concrete housekeeping pad. Coordinate final pad size and location in field

C. When indicated, install units on steel supports. Coordinate final location and placement of steel supports and ductwork connections in field

D. Secure the unit to the floor or housekeeping pad with suitable anchors bolted through the unit's base rail or support feet. Prior to anchoring, level unit in all directions with stainless steel shims.

E. Openings to ductwork and piping shall remain protected and covered until just prior to connection of utilities, or unit assembly. Immediately after unit assembly, restore all factory protection. Maintain protection after assembly until just prior to final acceptance by Owner.

F. Make piping and duct connections, install filters and unit accessories, and complete all work required to place the unit into service

3.2 TEMPORARY USE OF AIR HANDLING UNITS

A. Thoroughly clean unit of all grease, dirt, dust, etc.

B. Prior to placement into temporary service:

1. Perform manufacturer's pre-start protocol.
2. Perform commissioning activities.

C. Perform all manufacturer's required routine maintenance procedures during temporary service. Continuously maintain a log of such procedures. Store log at unit during temporary use period and include log as part of the final O&M manual.

D. While operating the air handler for temporary use, install a complete set of filters in the air handling unit of the same quality and efficiency as the specified permanent filters for the project.

BELOW PARAGRAPH REQUIRES MINIMUM MERV 8 FILTERS TO PROTECT DUCT WORK DURING CONSTRUCTION, WHICH MATCHES LEED REQUIREMENTS AND IS RECOMMENDED FOR NON-LEED PROJECTS AS WELL.

SOME SPECIALTY INSTALLATIONS (E.G. CLEAN ROOM OR CLEAN-ROOM-LIKE SPACES) MAY REQUIRE THAT TEMPORARY DUCTWORK FILTERS BE EQUIVALENT TO SECONDARY FILTER PERFORMANCE. IF THAT IS THE CASE, REVISE BELOW ACCORDINGLY.

E. Provide temporary filters, minimum MERV 8, to protect all ductwork and building contents when unit is operated during construction. Filters shall have an equal or better performance rating than primary filters specified for permanent use in order to prevent construction dirt infiltration into the air handling unit systems.

F. Continuously maintain all filters and replace when pressure drop exceeds 1 inch w.c., or at manufacturer's recommended change-out pressure drop, whichever is lower.

3.3 FIELD QUALITY CONTROL

A. Units shall undergo air and water balance and vibration testing per Related Section Testing, Adjusting and Balancing.

3.4 COMMISSIONING

A. Perform the commissioning activities as outlined in the Division 01 Section Commissioning and other requirements of the Contract Documents.

3.5 ADJUSTING, CLEANING, PROTECTION

A. After unit has completed any temporary service and just prior to final acceptance by Owner, contractor shall:

1. Thoroughly clean unit of all grease, dirt, dust, etc., lubricate bearings, align and tighten belts, and perform manufacturer's pre-start protocol
2. Install a new, complete set of filters.
3. Perform all commissioning activities, even if previously performed to ready for temporary service.
4. Touch up damaged galvanized surfaces with zinc rich paint, minimum 65 percent metallic zinc by weight.
5. Touch up damaged painted surfaces with manufacturer provided touch-up paint.

END OF SECTION 237324

UNIVERSITY OF MICHIGAN
ARCHITECTURE, ENGINEERING AND CONSTRUCTION

ARCHITECTURE & ENGINEERING
326 East Hoover, Mail Stop B
Ann Arbor, MI 48109-1002
Phone: 734-764-3414
Fax: 734-936-3334

BuildingName
The Description of the Project
P00000000 0000

SPECIFICATION DIVISION 23

NUMBER SECTION DESCRIPTION

DIVISION 23 HEATING, VENTILATING AND AIR CONDITIONING (HVAC)
SECTION 238216 - COILS AND DRAIN PANS

END OF CONTENTS TABLE

DIVISION 23 HEATING, VENTILATING AND AIR CONDITIONING (HVAC)
SECTION 238216 - COILS AND DRAIN PANS

04/2011 - REVISED FORMAT AND TECHNICAL CONTENT - D. KARLE AND M. PLATT.

11/2015: ADDED VENTROL AS APPROVED MFR. D. KARLE FOR HVAC MTT.

PART 1 - GENERAL

1.1 RELATED DOCUMENTS

INCLUDE PARAGRAPH 1.1.A AND B IN EVERY SPECIFICATION SECTION. EDIT RELATED SECTIONS 1.1.B TO MAKE IT PROJECT SPECIFIC.

A. Drawings and general provisions of the Contract, Standard General and Supplementary General Conditions, Division 1 Specification Sections, and other applicable Specification Sections including the Related Sections listed below, apply to this Section.

1.2 SUMMARY

A. Section Includes:

1. Coils and drain pans for all purposes, unless specified in other specification sections as part of a manufactured unit or assembly.

1.3 SUBMITTALS

A. Submit the following product data for approval, for each unit.:

1. Certified coil-performance ratings with all system operating conditions indicated.
2. Coil performance data substantiated by computer generated output data.
3. Coil materials of construction including headers, frames, and coil tracks, number of rows, fin spacing, fin types, and any heat transfer enhancements.
4. Details of coil supports for stacked coils.
5. Details and materials of cooling coil condensate collection drain pans and drain piping.
6. Coil anti-corrosion coating material data sheets.

1.4 QUALITY ASSURANCE

A. Manufacturers and Products: The products and manufacturers specified in this Section establish the standard of quality for the Work. Subject to compliance with all requirements, provide specified products from the manufacturers named in Part 2.

B. Reference Standards: Products in this section shall be built, tested, and installed in compliance with the following quality assurance standards; latest editions, unless noted otherwise.

1. AHRI Standard 410 Forced-Circulation Air Cooling and Air Heating Coils.

2. ANSI/ASHRAE Standard 62.1 Ventilation for Acceptable Indoor Air Quality.

1.5 WARRANTY

A. Provide a complete parts and labor warranty for a minimum of one year from the date of Substantial Completion.

PART 2 - PRODUCTS

2.1 MANUFACTURERS

A. Acceptable Manufacturers:

1. Trane, a business of Ingersoll Rand
2. York by Johnson Controls
3. McQuay International
4. Aerofin
5. Marlo DRS Technologies, Inc.
6. Coil Replacement Co.
7. Heatcraft Worldwide Refrigeration
8. USA Coil & Air
9. Ventrol

2.2 GENERAL COIL INFORMATION

A. Coil Tubes: Copper, minimum 5/8 in. diameter, minimum 0.035 in. tube wall thickness.

B. Coil Fins: Aluminum, plate type, minimum 0.0095 in. thickness.

C. Coil Header and Connection Materials: Seamless copper with extruded tube holes to permit expansion and contraction without creating undue stress or strain. Copper connections.

D. Coil Configuration: A maximum of 6 rows and a maximum of 10 fins per in.

E. Brazed joints.

F. Fins shall consist of corrugated aluminum plates with full fin collars for accurate spacing and maximum fin/tube contact. Fins shall have no openings punched on them to accumulate lint or dirt. Tubes mechanically expanded into fins to provide a continuous primary to secondary compression bond over the entire finned length for maximum heat transfer rates. Tubes that have been expanded through use of hydraulic methods are not acceptable.

G. Casing and Tube Supports: Construct with bolt holes for mounting at approximately 8-in. centers. Minimum 16 gauge, reinforced flange type, constructed to support the coil properly without sagging, racking, or stressing coil tubes. Provide heavier gauge casings and additional reinforcement where required to properly support stacked coils.

H. Coil manufacturer shall select the coil based on the most efficient coil circuiting. All coil circuits shall be of equal pressure drop. All coils shall be counter-flow configuration. Coils shall achieve uniform leaving air temperature across entire coil face. Use of internal restrictive devices to obtain turbulent flow is not acceptable. Coil performance shall be substantiated by computer generated output data.

I. Circuit coils to facilitate air venting and draining when installed level and plumb, and for service without removing individual plugs from each tube. Provide coils with same end connections, unless indicated otherwise. Provide vent and drain connections on the coil header.

J. Provide a foam strip seal located between casing channels and fins along top and bottom to prevent air bypass and water carryover.

K. Factory label inlet, outlet, vent, and drain connections.

L. Coil inlet, outlet, vent, and drain connections shall not penetrate drain pans. Configure coil and mounting arrangement accordingly.

M. Provide anti-corrosion coating for coils mounted in corrosive air streams, such as those mounted in lab exhaust heat recovery systems. Provide a coating type that will protect against the specific corrosives in the air stream. Coil coating subject to Owner and Engineer review, approval, or modification.

2.3 WATER COILS

A. Hot Water Coil Casings: Galvanized steel.

B. Chilled Water Coil Casings: Stainless steel.

C. Face velocities across chilled water coils shall not exceed 500 FPM.

D. Connection Type:

1. Sizes up to and including 2 in.: Soldered, screwed, or flanged type. Give consideration to equipment installation conditions when selecting connection type.
2. Sizes greater than 2 in.: Flanged connections.

E. Water Coil working pressure and temperature: 200 psig/220 deg. F.

2.4 DIRECT EXPANSION COILS

A. Face velocities across DX coils shall not exceed 500 FPM.

B. Dehydrate and seal with a dry nitrogen charge before shipment.

C. Evaporator coil connections: Male sweat type.

D. Liquid piping connections: Brass.

E. Suction piping connections: Copper.

F. Use interlaced tube configuration in VAV applications.

G. Direct expansion coil working pressure: 300 psig.

2.5 STEAM COILS

NON-DISTRIBUTING TYPE STEAM COILS SHOULD ONLY BE USED FOR APPLICATIONS WELL ABOVE FREEZING AND ARE NOT SPECIFIED HERE. THEY ALSO CAN SUFFER FROM POOR CONTROLLABILITY IN LARGER SIZES. NOT GENERALLY RECOMMENDED EXCEPT FOR SMALL ABOVE-FREEZING TERMINAL UNIT TYPE APPLICATIONS.

FOR ANY HORIZONTAL TUBE STEAM COIL LONGER THAN 108" FINNED LENGTH, DISTRIBUTING TYPE ARE STRONGLY RECOMMENDED WITH SUPPLY CONNECTIONS AT BOTH ENDS OF THE COIL, TO ASSURE EVEN HEATING ACROSS THE COIL FACE.

A. One row, steam distributing tube-in-tube type, with 1-in. diameter outside tubes and 5/8-in. diameter inside tubes; same or opposite end connections as required. Uniform leaving-air distribution temperature with maximum 4 deg. F temperature difference between leaving air from any lengthwise quadrant of coil area (based on nine or more equal area temperature readings in any given quadrant) and average leaving air temperature over entire coil face area. Dieform distributor tubes. Orifices shall discharge steam in the direction of condensate flow. Tubes shall be located concentrically within condensing tubes with corrosion resistant support clips. Provide steam deflectors opposite the supply connection, to prevent impingement of steam into tubes in connection area.

VERTICAL TUBE STEAM COILS FOR 100% OUTSIDE AIR APPLICATIONS (SPECIFIED BELOW) ARE LESS PRONE TO FREEZING AND ARE STRONGLY RECOMMENDED FOR SUCH APPLICATIONS FOR LARGE (> 48" LONG) COILS. HOWEVER DESIGNER MUST ASSURE THAT ADEQUATE VERTICAL SPACE IS AVAILABLE TO PROVIDE PROPER STEAM TRAP INLET HEIGHT. ALSO ASSURE SPACE IS ADEQUATE FOR STEAM CONNECTION TO THE COIL. A COMPROMISE OPTION IS HORIZONTAL 1" O.D. DISTRIBUTING TUBE TYPE WITH SUPPLY CONNECTIONS AT BOTH ENDS OF THE COIL.

1. 100 percent outside air steam coils with finned length greater than 48 inches: Provide vertical tubes; 1-in. diameter outside tubes and 5/8-in. diameter inside tubes.

B. Steam coil working pressure and temperature: 100 psig/400 deg. F.

2.6 DRAIN PANS

A. Provide a drain pan under each cooling coil, and where indicated. Provide intermediate drain pans at each level of stacked coils. Drain pans shall capture all condensate from coil assembly; including pipe header, pipe return bends, upstream run-off, and downstream carryover.

B. Drain Pan Construction: 304 stainless steel, self-supporting, sloped in two directions minimum, leak-tight with welded seams. Design, fabricate and install to prevent standing water.

C. For coils mounted in 100 percent outside air units, insulate the bottom of intermediate drains pans with 3/8-in.-thick flexible closed cell elastomeric insulation, with the upstream edge protected by a stainless steel angle.

D. Provide rigidly supported, leak tight copper downcomer drains from each intermediate pan to pan below.

TWO OPTIONS EXIST FOR BOTTOM PAN - ABOVE FLOOR OR DEPRESSED-IN-FLOOR. ABOVE FLOOR OPTION IS PREFERRED DUE TO EASE OF CONSTRUCTION, VERIFICATION AND EVENTUAL REPLACEMENT, AND HIGHER DRAIN OUTLET. HOWEVER ABOVE FLOOR OPTION WILL TYPICALLY INCREASE UNIT HEIGHT BY 3 TO 6 INCHES. CHOOSE BETWEEN FOLLOWING OPTIONS CAREFULLY.

E. Above Floor Bottom Pan: Minimum 16 gauge construction. Insulate between pan and floor with 1/2 in. thick flexible closed cell elastomeric insulation. Provide threaded outlet at pan low point.

F. Depressed-in-floor Bottom Pan: Minimum 16 gauge construction, maximum deflection 1/250 at 150 lbs./sq.ft. load.

1. Insulate below pan as part of the floor insulation system. Provide waterproof seal between pan and floor deck.
2. Provide threaded outlet at pan low point.

G. Flexible Closed Cell Elastomeric Drain Pan Insulation: Armacell-Armaflex or equivalent. Composite flame spread / smoke density not to exceed 25/50. Fully adhere to the pan bottom with insulation manufacturer's recommended adhesive.

2.7 SOURCE QUALITY CONTROL

A. Factory test all coils.

B. Proof test all water and steam coils to 300-psig minimum, and leak test to 200 psig, minimum.

C. Proof test all direct expansion coils to 450 psig minimum, and leak test to 300 psig, minimum.

PART 3 - EXECUTION

3.1 INSTALLATION

A. Install coil assemblies in accordance with details, other specifications sections, approved submittals, and the coil manufacturer's installation requirements and recommendations.

B. Install coils level and plumb.

C. Use fin combs to restore bent fins to upright condition.

D. Block (safe) gaps around coil casings to prevent air flow bypass. Use sheet metal matching the coil casing material, secured with sheet metal screws. Close minor gaps with gasketing and sealants. All safing to match adjacent construction.

E. Clean coils using materials and methods recommended by manufacturers, to remove dust and debris

3.2 COMMISSIONING

A. Perform the commissioning activities as outlined in the Division 01 Section Commissioning and other requirements of the Contract Documents.

END OF SECTION 238216

UNIVERSITY OF MICHIGAN
ARCHITECTURE, ENGINEERING AND CONSTRUCTION

ARCHITECTURE & ENGINEERING
326 East Hoover, Mail Stop B
Ann Arbor, MI 48109-1002
Phone: 734-764-3414
Fax: 734-936-3334

BuildingName
The Description of the Project
P00000000 0000

SPECIFICATION DIVISION 23

NUMBER SECTION DESCRIPTION

DIVISION 23
SECTION 238219 - FLOOR MOUNTED FAN COIL UNITS (UN-DUCTED)

END OF CONTENTS TABLE

DIVISION 23
SECTION 238219 - FLOOR MOUNTED FAN COIL UNITS (UN-DUCTED)

REVISIONS:

FIRST EDITION MAY 2010, AEC MECH TECH TEAMS - HVAC/CONTROLS GROUP. DEVELOPED BASED ON THE NORTH QUAD RESIDENCE HALL FAN COIL SPECIFICATION. GENERALLY INTENDED FOR SMALL (< 1/2 HP) VERTICAL FAN COILS MOUNTED INSIDE THE ROOM WITH CHW AMD HEATING COILS. COULD BE ADAPTED FOR OTHER TYPE IN-ROOM FAN COILS.

FAN COIL ROOM CONTROLLER (I.E. THERMOSTAT) AND CONTROL VALVES ARE SPECIFIED IN SECTION 230900 MECHANICAL SYSTEMS CONTROLS, AND NOT IN THIS SECTION. THIS SECTION COVERS ONLY THE FAN COIL CONTROL TRANSFORMER AND RELAY PACK.

NEW FORMAT DRAFT NOVEMBER 15, 2010. MANUFACTURERS UPDATED, FORMAT AND ORGANIZATION REVISED.

OCT 2015: ADDED PRICE AS APPROVED MFR. D. KARLE PER HVAC MTT.

PART 1 - GENERAL

1.1 RELATED DOCUMENTS

INCLUDE PARAGRAPH 1.1.A AND B IN EVERY SPECIFICATION SECTION. EDIT RELATED SECTIONS 1.1.B TO MAKE IT PROJECT SPECIFIC.

A. Drawings and general provisions of the Contract, Standard General and Supplementary General Conditions, Division 1 Specification Sections, and other applicable Specification Sections including the Related Sections listed below, apply to this Section.

CAREFULLY VERIFY, EDIT AND COORDINATE RELATED SECTIONS.

B. Related Work Specified Elsewhere: Examine Drawings and other sections of the Specifications for requirements that affect and specify work under this section, in particular the following:

1. Section 221113: Piping Materials and Methods.
2. Section 220523: Valves.
3. Section 220513: Motors.
4. Section 220719: Mechanical Systems Insulation.
5. Section 232116: Hydronic Piping Specialties.
6. Section 230900: Mechanical Systems Controls.
7. Division 26: Electrical.

1.2 SUMMARY

A. Section Includes

1. Floor-mounted fan-coil units, with controls provided in part or in entirety by the fan coil manufacturer, as specified.

REVISE THE ALTERNATES REQUIREMENTS AND THE CORRESPONDING INFORMATION IN PART 1 AND PART 2 BASED ON PROJECT REQUIREMENTS.

IF THERE ARE NO BID ALTERNATES, INDICATE "NONE." CONSIDER SPECIFYING ECM MOTORS AS AN ALTERNATE. CONSIDER SPECIFYING WELDED, RADIUSED CORNERS ON FRONT AND SIDE EDGES OF TOP AS AN ALTERNATE. WELDED EDGES RESULT IN A MUCH MORE ATTRACTIVE AND DURABLE CABINET AND ARE PREFERRED BY U-M HOUSING.

1.3 ALTERNATES

A. Bid Alternate No. 1: Furnish fan-coil units with pre-assembled hydronic piping package. Tubing, valves, fittings, instrumentation, supports and insulation as specified herein and as indicated on the Drawings.

1. Piping package shall be shipped from the manufacturer's factory connected to coil(s), secured and protected from damage during shipment.
2. Piping package shall include the required control valves. Control valves shall be as specified in Section "Mechanical Systems Controls."

1.4 COORDINATION

A. Coordinate dimensions and arrangement of fan coils with building elements including windowsill height, floor finish, pipe entry location, and wall construction.

REVISE SUBMITTALS AS REQUIRED. SAMPLE PARAGRAPHS UNDER 1.5 REQUIRE DELIVERY OF A SAMPLE FAN COIL WITH THE BID, AND IS WRITTEN ASSUMING THE FAN COILS WILL BE PREPURCHASED, AND THAT A PREPIPED FAN COIL WILL BE CONSIDERED AS AN ALTERNATE. SAMPLE UNIT SUBMITTAL IS HIGHLY RECOMMENDED FOR PROJECTS WITH A LARGE QUANTITY OF FAN COILS.

1.5 SUBMITTALS

A. Submit the following product data for approval:

1. Heating and cooling coil total and sensible heat transfer capacity, entering and leaving water temperatures, water flow rate, water pressure drop, and air pressure drop.
2. Details of equipment assemblies indicating dimensions, weights, required clearances, component locations, and location and size of each field connection. Include cabinet construction details: panel gauge, removal method for access panel, cabinet mounting method, and filter and fan motor removal method.
3. Details of motor including type, manufacturer and electrical characteristics.
4. Wiring Diagrams: Power, disconnect switch, controls, transformer and three-speed fan control relays.
5. Control transformer-sizing calculations.
6. Detailed information on fan control relay board.
7. Octave band and A-weighted sound power data for each unit type at fan coil rated capacity, tested per AHRI Standard 350.
8. Evidence of UL or ETL listing and labeling.

B. Equipment schedule with the following information for each unit type:

1. Quantity of each type.
2. Equipment tag.
3. Model number.
4. Manufacturer's size designation.
5. Configuration (2-pipe or 4-pipe).
6. Number of coils, number of rows for each coil, fin spacing for each coil, airflow rate and motor watts at each fan speed.

C. Maintenance schedules and repair part numbers and manufacturer of motors, coils, integral controls, relay board, control transformer, and air filters.

D. Warranty Documentation: Submit warranty documentation according to requirements of Contract Documents.

E. Detailed schedule with each fan coil tagged by room number, indicating unit style, heating and cooling capacity, left- or right-hand piping configuration, and 2-way or 3-way control valves.

THE FOLLOWING PARAGRAPHS SPECIFY CONDITIONS WHEN THE FAN COILS ARE PREPURCHASED, AND THAT A PREPIPED FAN COIL WILL BE CONSIDERED AS AN ALTERNATE. REQUIRE THAT A SAMPLE FAN COIL UNIT BE DELIVERED WITH THE BID AND IS WRITTEN ASSUMING. SAMPLE UNIT IS HIGHLY RECOMMENDED FOR PROJECTS WITH LARGE QUANTITIES OF FAN COILS.

F. Samples: Submit sample fan coil unit with bid: One unit, Type FCU-XX, pre-piped, with factory-applied color finish, and factory-installed piping package:

1. Sample unit shall comply with these specifications in all respects.
2. Configure piping for 2-way control valves with 3/4 inch nominal control valve body size.
3. Provide Sample unit pre-piped with piping accessories and control valves, arranged per the drawing details. See "Factory-Provided and Installed Hydronic Piping Package" in Part 2.
4. Piping shall be 3/4 inch nominal size. Pipe unit for 4-pipe configuration.
5. Configure sample unit to allow the fan to operate at all three speeds after temporary power is provided.

1.6 DELIVERY, STORAGE AND HANDLING

A. Mark each fan coil cabinet back with the scheduled room location.

B. Mark the fan coil room locations on the outside of the shipping box.

C. Support piping to prevent damage to pipe and coil headers during shipping.

D. Restrain fans and other components to prevent damage during shipping.

E. Ship each unit wrapped in a heavy plastic bag, packed in a corrugated cardboard shipping box.

REVISE MAINTENANCE MATERIAL SUBMITTALS TO SUIT PROJECT REQUIREMENTS. FILTERS AND TOUCH-UP PAINT ARE GENERALLY NOT REQUIRED FOR SMALL PROJECTS. REVIEW PART 3 REGARDING TEMPORARY USE OF FAN COILS DURING CONSTRUCTION AND FINAL FAN COIL TURN-OVER TO OWNER AND THE REQUIREMENTS FOR EXTRA FILTERS. REVISE

TOOLS IN PARA. D BASED ON THE QTY. OF FAN COILS. CONSIDER LISTING OTHER SPARE PARTS THAT MIGHT BE UNIQUE TO THE FAN COIL.

1.7 EXTRA STOCK MATERIALS

A. Furnish extra materials described below that match installed products. Package with protective covering for storage. Affix labels describing contents.

B. Furnish extra materials described below that match products installed and that are packaged with protective covering for storage and identified with labels describing contents.

1. Fan-Coil-Unit Filters: Furnish start-up filter (installed in the shipped unit) and one spare filter for each filter installed.
2. Touch-up paint: 48 fluid ounces total for each cabinet color, in spray cans.
3. Tool or bit to remove the tamper-proof fasteners: total quantity of twenty.

C. Extra materials, excluding start-up filters, are for the Owner's use, not for Contractor's use, during construction.

D. Provide units built, tested, and installed in compliance with the latest edition of the following quality assurance standards, unless noted otherwise:

1. ANSI/AHRI 350 Sound Rating of Non-Ducted Indoor Air-Conditioning Equipment.
2. ANSI/AHRI Standard 440: Performance Rating of Room Fan-Coils.
3. NFPA 70- National Electric Code.
4. NFPA 90A Installation of Air-Conditioning and Ventilating Systems.
5. ANSI/ASHRAE 62.1 Section 5 (Systems and Equipment) and Section 7 (Construction and Start-up).
6. ANSI/ASHRAE 90.1-2007 Energy Standards for Low Rise Buildings Except Low Rise Residential Buildings.
7. ASTM C916 - Standard Specification for Adhesives for Duct Thermal Insulation.
8. ASTM C411 Standard Test Method for Hot-Surface Performance of High-Temperature Thermal Insulation
9. ASTM C612 Standard Specification for Mineral Fiber Block and Board Thermal Insulation.
10. ASTM E84 Standard Test Method for Surface Burning Characteristics of Building Materials
11. ASTM A653 Standard Specification for Steel Sheet, Zinc-Coated (Galvanized) or Zinc-Iron Alloy-Coated (Galvannealed) by the Hot-Dip Process
12. Fan coils shall be Underwriters Laboratories (UL) or Intertek (ETL) listed.

REVISE WARRANTY PER PROJECT. TWO-YEAR WARRANTY MAY BE APPROPRIATE WHEN PURCHASING LARGE QUANTITIES OF FAN COILS.

E. Promptly remedy any Work not in accordance with the Contract Documents, within a one-year period from the date of Substantial Completion, according to the Standard General Conditions and Supplemental General Conditions.

PART 2 - PRODUCTS

2.1 MANUFACTURERS

A. Subject to compliance with all requirements, provide products from one of the following manufacturers:

1. Airtherm, Westfield, MA.
2. Enviro-Tec by Johnson Controls, Largo, FL.
3. International Environmental Corporation, Oklahoma City, OK.
4. Price Industries
5. Rittling, Buffalo, NY.

VERIFY THE REQUIRED PROJECT SPECIFIC DIMENSIONS FOR THE FAN COILS AND SCHEDULE OR SPECIFY ACCORDINGLY. MANUFACTURER'S STANDARD HEIGHT UNITS MAY NOT FIT PROPERLY UNDER EXISTING WINDOWS/WINDOW SILLS.

LIST FAN COIL SOUND POWER LEVELS IN THE FAN COIL SCHEDULE OR IN THE SPECIFICATIONS. BE PARTICULARLY CAUTIOUS FOR FAN COILS USED IN SLEEPING QUARTERS.

2.2 MANUFACTURED FAN COIL UNITS

A. Factory fabricated Fan Coil Units: Built, tested, and rated in accordance with the Quality Assurance Standards referenced in this Section.

1. Mark the room location on the fan coil cabinet back.

B. Capacities: As indicated in the equipment schedules.

C. Dimensions: Maximum allowable dimensions as indicated on the Drawings. Maximum allowable height shall include the height of the leveling legs when adjusted to their minimum extension position.

2.3 FAN COIL UNIT CONSTRUCTION

A. Chassis:

1. Construction: Heavy gauge, minimum G60 galvanized or A40 galvannealed steel. Construct to eliminate racking.
2. Provide a minimum of four leveling legs with minimum 1-inch adjustment.
3. Provide framing members with a minimum of two 7/16 inch diameter minimum, wall-mounting holes and two floor-mounting holes. Provide additional holes if required for safe and secure mounting. Mounting holes to permit bolting to the wall and the floor with lag screws.

B. Cabinet: Steel with baked-enamel or powder coat finish.

1. Tops: Steel, 18 gauge minimum thickness.
2. Front and sides of cabinet: Steel, 16 gauge minimum thickness.

NOTE THAT THE PARAGRAPH BELOW IS FOR AN EXTERNAL (REMOTE) THERMOSTAT FOR THE FAN COIL. REVISE WHEN THE PROJECT REQUIRES A FAN COIL WITH DOORS TO ACCESS A FAN SPEED SWITCH OR THERMOSTAT CONTROL.

3. Cabinet tops: Sloped, seamless and continuous without access doors for temperature controls, fan speed switches, and other controls.
4. Outlet grille: Pencil-proof and stamped into the top with all grille edges recessed into the casing and not projecting out of the casing.
5. Cabinets and front panels shall have all edges turned over and all burrs removed. The finished product shall have no sharp edges.
6. Front panel: Removable, with channel-formed edges and insulation on the entire interior face of the panel, and secured with tamper-resistant cam fasteners. Fasteners designed with a hexagonal socket for use with a common hex-head tool (allen wrench) shall not be acceptable.
7. Extend the front access panel for the full width of the fan coil cabinet, included the piping pocket extension and electrical pocket.
8. Provide an extension on the piping side of the cabinet unit. Extension shall result in an overall inside width of the piping pocket of not less than 17 inches. Extension shall be continuous with the front, top, sides, and bottom of the cabinet and shall not have an "add-on" configuration. Provide a cutout in the cabinet end to allow connecting piping to be routed into the piping pocket.
9. Provide an electrical equipment pocket, on the side opposite of the piping pocket, with a minimum clear inside width of 8 inches.
10. Base or legs: Form all vertical surfaces of solid sheet metal, including sides facing the air stream (facing the return air/air filter opening); open construction is not permissible.
11. Apply insulation in the entire cabinet on the interior faces including the end pockets, sides, front, and top panel away from the coil section. Apply insulation to interior cabinet surfaces to insulate the conditioned air stream and to prevent sweating. Do not insulate chilled water/dual temperature piping inside the cabinet. Secure Insulation to cabinet with water-based, non-out-gassing adhesive providing 100 percent coverage of the cabinet interior surfaces.

C. Finished Surfaces: Clean, phosphatize, and coat with a factory baked-on or powder-coat primer, and separately applied baked or powder coated finish paint. Final color shall be as selected from the manufacturer's standard color palette.

D. Insulation: Coil and Cabinet: minimum 1/2-inch-thick closed-cell elastomeric foam complying with the following:

1. ASTM C 411 Standard Test.
2. Attach with adhesive complying with ASTM C 916.
3. Fire-Hazard classification, insulation and adhesive combined: Maximum flame-spread index of 25 and smoke-developed index of 50 when tested according to ASTM E 84.
4. Airstream Surfaces: Surfaces in contact with the airstream shall comply with requirements in ASHRAE 62.1.

E. Drain Pans: Fabricate drain pans and drain connections to comply with ASHRAE 62.1.

1. Main drain pan (pan immediately below coil): Stainless steel, insulated.
2. Auxiliary drain pan: Insulated molded plastic or stainless steel with threaded drain connection. Pan shall receive condensate from main drain pan. Provide large enough to capture condensate dripping from all chilled water and dual temperature piping located inside the fan coil cabinet.
   a. Note: Do not insulate chilled water/dual temperature piping inside the cabinet.

F. Filters: Minimum arrestance according to ASHRAE 52.1, and a minimum efficiency reporting value (MERV) according to ASHRAE 52.2

1. Disposable Type 1 inch pleated cotton-polyester media: 90 percent arrestance and 7 MERV.
2. Replaceable through return air opening without removing access panel.

2.4 HYDRONIC COILS

A. Hydronic Coils: Copper tube, minimum 0.025 inch wall thickness, with mechanically bonded aluminum fins, maximum of 12 fins per inch, copper headers and copper connections; rated for a minimum working pressure of 200 psig and a maximum entering-water temperature of 220 degrees F.

1. Factory test all coils as specified in the Source Quality Control article.
2. Include manual air vent and drain connections accessible from the pipe access chase end of unit.
3. Chilled water and dual-temperature water coil casings, tracks, baffles, and supports shall be of stainless steel construction.
4. Provide coil piping connections extended into the piping pocket.

2.5 FAN AND MOTOR BOARD ASSEMBLY (BLOWER DECK):

A. Fan(s) and motor(s): Mount on a common, rigid, sheet metal panel, fully insulated and removable as an assembly for ease of maintenance. Assembly shall be removable and replaceable through the front access panel and shall not require the removal of side panels.

B. Fan: Forward curved, double width, centrifugal; directly connected to motor. Galvanized steel or aluminum wheels; galvanized-steel fan scrolls.

C. Motor: Three speed, single phase, permanent split capacitor (PSC) type with permanently lubricated bearings. Provide motor with resilient mounting and built-in overload protection with automatic reset.

D. Wiring termination: Pre-wire motor to power/relay board with quick-disconnect plug connection.

E. The maximum allowable fan and motor RMS velocity at the maximum fan speed shall not exceed 0.15 in. /sec. in the horizontal, vertical and axial directions. Fans may be field tested after installation by an independent third party. The manufacturer, without cost to the Owner, shall correct any fan/motor found to exceed these vibration limits.

NOTE THAT THE FOLLOWING ARTICLE IS WRITTEN FOR AN EXTERNAL (REMOTE) THERMOSTAT (ROOM CONTROLLER) USED FOR THE FAN COIL, SUPPLIED BY THE CONTROLS CONTRACTOR. EDIT AS REQUIRED IF PROJECT REQUIRES DIFFERENT CONTROLS,

2.6 FAN COIL CONTROLS AND ELECTRICAL CONNECTIONS

A. Control devices and operational sequences are specified in Section "Mechanical System Control" and the Sequence of Operation indicated on the control drawings. Provide pre-wired controls that achieve the operational sequences and that are compatible with the remote thermostat (room controller) specified in Related Section "Mechanical Systems Control." Remote thermostat will be provided and wired to the fan coil by the controls contractor.

B. Provide a three-speed fan relay control board pre-wired to the fan, and with connections for the low voltage remote thermostat. Coordinate with controls contractor and assure control relay board is compatible with remote thermostat. Relays shall be silent in operation.

C. Provide 120/24 volt control transformer inside a separate protective cover, or with fully guarded wiring connections. Control transformer shall be a discrete device, not part of a circuit or relay board. Size transformer for control valve(s), thermostat, and fan relays, plus 20 percent of maximum load. Transformer shall be appropriately fused on both the line side and the load side.

D. Mount all electrical devices secured to the chassis inside the chassis pocket opposite the piping pocket.

E. Completely factory pre-wire disconnect switch, motor(s), control transformer, and relay board. Isolate all high voltage (120V) wiring from low voltage (24V) wiring via separate junction boxes and wireways.

1. Provide 120V disconnect switch mounted on a junction box adequately sized to allow external "single point" high voltage power connection to the fan coil unit. Configure disconnect wiring to turn off all high and low voltage power in the fan coil.
2. Provide a thermostat junction box to allow "single point" connection of thermostat wiring. Terminate control valve (when control valves provided by fan coil manufacturer), control transformer, and relay board wiring in the thermostat junction box. Provide a junction box of adequate size to allow controls contractor to terminate all thermostat connections, and control valve wiring when control valves are not provided by fan coil manufacturer, inside the box with wire nuts.

F. Provide a project specific wiring diagram affixed to the inside of each fan coil cabinet.

G. All electrical work shall comply with applicable Related Documents, Electrical Sections and Quality Assurance Standards.

2.7 FAN COIL UNIT WITH HYDRONIC PIPING PACKAGE - BASE BID AND ALTERNATE WORK

REVISE BELOW DEPENDING ON PROJECT REQUIREMENTS. FILL IN BID ALTERNATE NUMBER IN PARAGRAPH B OR EDIT, AS APPLICABLE:

A. Base Bid Work: Factory-Provided and Installed Hydronic Piping Package is not provided.

1. Provide coil piping connections protected with plastic end caps, ready for field connection.
2. Provide threaded brass plugs in coil header air vent and drain connections.

B. Alternate Work: Complete pre-assembled hydronic piping package under Bid Alternate No. **X.**

1. Configure piping as indicated in the piping details.
2. Tubing: Seamless copper tubing, Type L, soldered joints.
3. Provide piping components including piping, valves, fittings, joints, instrumentation, as specified in Related Specification Sections. Do not provide components or products from component manufacturers that are not specified and listed in the Contract Documents.
4. Include control valves as described in Related Specification Section. Valves shall be of pipe size and 2-way or 3-way configuration as indicated for specific fan coils. Engineer shall select Control valve Cv during submittal process. At the discretion of the Engineer, smaller valve body size may be selected at that time.
5. Do not insulate chilled water and dual temperature piping. Arrange piping completely above the auxiliary drain pan as described under Drain Pans paragraph.
6. Insulate hot water piping. Insulate any chilled water and dual temperature piping that cannot be located above the auxiliary drain pan.
7. Insulate with closed cell elastomeric insulation per Related Specification Sections.
8. Install piping to allow access to all piping components (drain connections, unions, etc.), arranged so that it is possible to remove the control valve body and actuator without removing any other component.
9. Provide adequate and easily removable pipe hangers. Hangers shall rigidly support the pre-assembled piping package from the fan coil chassis, preventing damage during shipping and operation. Provide plastic coated hangers to prevent galvanic corrosion between hanger and piping components.
10. Provide plastic end caps on the field connection points.

2.8 SOURCE QUALITY CONTROL

A. Factory test all coils with a minimum of 350 psig air pressure while submerged under water.

B. Assemble and factory test each unit prior to shipping. Pressure test coils and piping packages for leaks. Cycle controls and operate fan at all speeds to check for proper operation. Correct all deficiencies prior to shipping.

PART 3 - EXECUTION

3.1 EXAMINATION

A. Examine areas to receive fan-coil units for compliance with requirements for installation tolerances and other conditions affecting performance.

B. Examine rough-in construction for piping and electrical connections to verify actual locations before fan-coil-unit installation.

C. Proceed with installation only after unsatisfactory conditions have been corrected.

3.2 INSTALLATION

A. Install fan coil units level and plumb. Adjust leveling legs individually to the minimum height required to level units. Do not use leveling legs to align coil connections with field piping - adjust field piping instead.

B. Bolt unit to blocking in wall after leveling. Bolt units to floor if inadequate wall support exists in the wall. Do not use toggle bolts or dry-wall anchors. Install bolts in every fan coil mounting hole.

C. Install fan coil units to comply with Quality Assurance Standards and manufacturer’s installation instructions.

3.3 CONNECTIONS AND INSULATION

A. General piping installation requirements are specified in Related Work Specification Sections. Drawings indicate general arrangement of piping, fittings, and specialties. Install as follows:

1. Connect hydronic and condensate drain piping to the unit.
2. Install piping to allow access to all piping components (drain connections, unions, etc.), arranged so that it is possible to remove the control valve body and actuator without removing any other component.
3. Provide adequate and easily removable pipe hangers to rigidly support piping within the fan coil. Provide plastic coated hangers to prevent galvanic corrosion between hanger and piping components.
4. Arrange chilled water and dual temperature piping so that it is installed completely above the auxiliary drain pan, to capture any condensate dripping from the piping.

B. Insulate condensate drain and hot water piping with closed cell elastomeric insulation per Related Specification Sections. Insulate any chilled water and dual temperature piping that cannot be located above the auxiliary drain pan.

1. Insulate piping all the way to coil headers and drain pan connection.
2. If fan coil unit is provided with pre-assembled hydronic piping package under the Alternate Work, provide insulated piping, as described in the Part 2 article. Insulate all field installed piping as described above.

C. Connect wiring and ground equipment according to electrical requirements indicated in the Related Specification Sections.

3.4 CLEANING AND PROTECTING

A. Protect units from damage, scratching, dirt and debris immediately after installation as follows:

1. Wrap or cover entire cabinet with heavy plastic. Completely cover return air inlet. Secure plastic in place with tape.
2. Cover entire cabinet with heavy cardboard secured in place. Utilize fan coil shipping box when possible. Mark top with large letters stating, "FRAGILE – DO NOT STAND."
3. Use only tape that will not mar finishes. Clean and remove all tape and adhesive residue prior to starting units.
4. Remove all protective materials immediately prior to starting each unit. Do not uncover any unit before all drywall taping and sanding has been completed in that area.

3.5 TEMPORARY USE PRIOR TO OCCUPANCY

A. Start fan coil units for temporary use only with the express written permission of the Owner and compliance with all requirements of the Contract Documents.

B. Complete all drywall taping, sanding and finishing in an area prior to any early use of fan coil units serving that area.

C. Prior to starting each unit, remove front access cover and vacuum complete unit including coils, fan scrolls, drain pans, access sections, chassis, and cabinet.

D. Perform manufacturer's pre-start protocol and commissioning activities immediately prior to placing into temporary service.

E. Tape foam filter material over entire discharge grille.

F. Install a complete set of temporary filters in the fan-coil unit equal to the quality and efficiency of the specified permanent filters. If the fan coil unit was equipped with pre-installed filters, they may be used for temporary service. Provide factory new, clean filters in units at final turn over to the Owner.

G. During temporary service, perform all manufacturer's recommended and required routine maintenance procedures, including filter replacement at regular intervals, as required. Continuously maintain a log of all such procedures completed. Store log at unit during temporary use period and include log as part of the final Operation and Maintenance Manual.

3.6 FIELD QUALITY CONTROL

A. Perform the following field tests and inspections and prepare test reports:

1. Test and adjust controls and safety devices. Replace damaged and malfunctioning controls and equipment.
2. Test unit operation with thermostat in all modes of operation.
3. Verify that drain pans collect all condensate and are properly sloped to drain so that no condensate is retained in the pans.

4. Remove and replace malfunctioning units and retest as specified above.

ENGINEER SHALL VERIFY THAT THE MECHANICAL SYSTEMS CONTROLS SPECIFICATION DESCRIBES CONTROLS START-UP FOR FAN COIL UNITS.

B. Coordinate controls start-up for fan coil units with the Mechanical Systems Controls Specifications.

3.7 COMMISSIONING

A. Perform complete functional testing as required by the Commissioning Agent.

B. Perform manufacturer's pre-start protocol and commissioning activities after unit has completed temporary service.

3.8 FINAL TURN-OVER TO OWNER

A. Immediately prior to Substantial Completion, re-clean all fan-coil units. Remove front access cover and vacuum complete unit including coils, fan scrolls, drain pans, access sections, chassis, and cabinet. Clean and remove all tape and adhesive residue from cabinet.

B. Straighten coil fins with a fin comb.

C. Sand, prime coat, and touch-up all scratches with color-matched, factory-supplied touch-up paint. Where touch-up painting does not match adjacent, unblemished finish in either color or texture, field paint the entire cabinet surface exposed to view with factory-provided spray paint.

D. After final cleaning and painting, install a new, clean set of air filters in each unit if units were used for Temporary Use.

REVISE TO COORDINATE WITH PART 1 SUBMITTALS IF SPARE FILTERS ARE REQUIRED.

E. Provide spare filters to Owner.

3.9 OWNER TRAINING

A. In cooperation with the Commissioning Agent, train Owner's personnel on basic fan-coil unit maintenance by demonstrating the following: location of control devices, removal of access panel, filter replacement, relay replacement, and motor replacement.

END OF SECTION 238219

UNIVERSITY OF MICHIGAN
ARCHITECTURE, ENGINEERING AND CONSTRUCTION

ARCHITECTURE & ENGINEERING
326 East Hoover, Mail Stop B
Ann Arbor, MI 48109-1002
Phone: 734-764-3414
Fax: 734-936-3334

BuildingName
The Description of the Project
P00000000 0000

SPECIFICATION DIVISION 23

NUMBER SECTION DESCRIPTION

DIVISION 23 HEATING, VENTILATING AND AIR CONDITIONING (HVAC)
SECTION 238220 - HORIZONTAL FAN COIL UNITS

END OF CONTENTS TABLE

DIVISION 23 HEATING, VENTILATING AND AIR CONDITIONING (HVAC)
SECTION 238220 - HORIZONTAL FAN COIL UNITS

NEW SECTION: JUNE 2011.

FAN COILS IN THIS SPECIFICATION ARE LIMITED TO SINGLE PHASE UNITS OF LESS THAN 1/2 HP WITH DIRECT DRIVE FANS. COMPARED TO BLOWER COILS, FAN COILS TYPICALLY PROVIDE RELATIVELY LOW FAN STATIC PRESSURE AND ARE DESIGNED TO ACCOMMODATE MINIMAL OR NO ATTACHED DUCTWORK.

HORIZONTAL FAN COILS ARE AVAILABLE IN NUMEROUS CONFIGURATIONS AND WITH MULTIPLE OPTIONS; THIS SPECIFICATION IS THEREFORE NECESSARILY OUTLINE IN NATURE. EDIT SECTION CAREFULLY TO MAKE IT PROJECT SPECIFIC. SPECIFICATIONS FOR MFR. PROVIDED CONTROLS INCLUDING 3 SPEED FAN CONTROL (RELAY BOARD), FACTORY PIPING PACKAGES, DX COILS, CABINETS FOR FINISHED SPACE USE, AND INTEGRAL GRILLES/REGISTERS/DIFFUSERS ARE NOT INCLUDED AND MUST BE ADDED IF REQUIRED. U-M SPECIFICATION 238219 "FLOOR MOUNTED FAN COIL UNITS UNDUCTED" IS A GOOD RESOURCE FOR CONTROL SPEC.S AND OTHER SPEC. LANGUAGE THAT MAY BE USEFUL WHEN SPECIFYING HORIZONTAL FAN COILS.

PART 1 - GENERAL

1.1 RELATED DOCUMENTS

INCLUDE PARAGRAPH 1.1.A AND B IN EVERY SPECIFICATION SECTION. EDIT RELATED SECTIONS 1.1.B TO MAKE IT PROJECT SPECIFIC.

A. Drawings and general provisions of the Contract, Standard General and Supplementary General Conditions, Division 1 Specification Sections, and other applicable Specification Sections including the Related Sections listed below, apply to this Section.

SPEC EDITOR: CAREFULLY VERIFY, EDIT AND COORDINATE RELATED SECTIONS.

B. Related Sections:

1. Section 2220513: Motors.
2. Section 220719: Mechanical Systems Insulation.
3. Division 26: Electrical.

1.2 SUMMARY

A. Section Includes:

1. Horizontal fan-coil units with motors less than 1/2 HP, direct drive fans, and hydronic coils. Controls provided in part or in entirety by the fan coil manufacturer, as specified.

1.3 COORDINATION

A. Coordinate dimensions and arrangement of fan coils with building elements including to maintain all maintenance clearances. Pay special attention to required electrical clearance.

1.4 SUBMITTALS

A. Submit the following product data for approval:

1. Heating and cooling coil total and sensible heat transfer capacity, entering and leaving water temperatures, water flow rate, water pressure drop, and air pressure drop.
2. Piping connections including size, material types, and dimensioned locations for each service.
3. Ductwork connections including sizes, locations, and methods of connections to mating ductwork.
4. Locations of electric power connections.
5. Details of equipment assemblies indicating dimensions, weights, required clearances, component locations, and location and size of each field connection. Include cabinet construction details: panel gauge, removal method for access panel, cabinet mounting method, and filter and fan motor removal method.
6. Details of motor including type, manufacturer and electrical characteristics.
7. Octave band and A-weighted sound power data for each unit type at fan coil rated capacity, tested per AHRI Standard 350.
8. Evidence of UL or ETL listing and labeling.

SPEC EDITOR: UNHIDE THE BELOW HIDDEN TEXT IF DISCONNECT SWITCH, CONTROLS, TRANSFORMER, OR 3 SPEED FAN RELAY BOARD ARE TO BE PROVIDED BY THE FAN COIL MFR.

9. Wiring Diagrams: Power, disconnect switch, controls, transformer and three-speed fan control relays.
10. Control transformer-sizing calculations.
11. Detailed information on fan control relay board.

B. Equipment schedule with the following information for each unit type:

1. Equipment tag.
2. Room number of thermostat location.
3. Model number.
4. Manufacturer’s size designation.
5. Configuration (2-pipe or 4-pipe).
6. Number of coils, number of rows for each coil, fin spacing for each coil.
7. Heating and cooling capacity.
8. Airflow rate and motor watts at each fan speed.

C. Maintenance schedules and repair part numbers and manufacturer of motors, coils, integral controls, relay board, control transformer, and air filters.

1.5 DELIVERY, STORAGE AND HANDLING

A. Mark each fan coil cabinet with the room number where it is scheduled to be installed.

B. Mark each fan coil shipping box with the room number where it is scheduled to be installed.

C. Support piping to prevent damage to pipe and coil headers during shipping.

D. Restrain fans and other components to prevent damage during shipping.

E. Ship each unit wrapped in a heavy plastic bag, packed in a corrugated cardboard shipping box.

1.6 QUALITY ASSURANCE

A. Manufacturers and Products: The products and manufacturers specified in this Section establish the standard of quality for the Work. Subject to compliance with all requirements, provide specified products from the manufacturers named in Part 2.

B. Reference Standards: Products in this section shall be built, tested, and installed in compliance with the specified quality assurance standards; latest editions, unless noted otherwise.

1. ANSI/AHRI 350 Sound Rating of Non-Ducted Indoor Air-Conditioning Equipment.
2. ANSI/AHRI Standard 440: Performance Rating of Room Fan-Coils.
3. NFPA 70- National Electric Code.
4. NFPA 90A Installation of Air-Conditioning and Ventilating Systems.
5. ANSI/ASHRAE 62.1 Section 5 (Systems and Equipment) and Section 7 (Construction and Start-up).
6. ANSI/ASHRAE 90.1-2007 Energy Standards for Low Rise Buildings Except Low Rise Residential Buildings.
7. ASTM C916 - Standard Specification for Adhesives for Duct Thermal Insulation.
8. ASTM C411 Standard Test Method for Hot-Surface Performance of High-Temperature Thermal Insulation.
9. ASTM C612 Standard Specification for Mineral Fiber Block and Board Thermal Insulation.
10. ASTM E84 Standard Test Method for Surface Burning Characteristics of Building Materials.
11. ASTM A653 Standard Specification for Steel Sheet, Zinc-Coated (Galvanized) or Zinc-Iron Alloy-Coated (Galvannealed) by the Hot-Dip Process.
12. Units shall be Underwriters Laboratories (UL) or Intertek (ETL) listed.

1.7 WARRANTY

A. Provide a complete parts and labor warranty for a minimum of one year from the date of Substantial Completion.

PART 2 - PRODUCTS

2.1 MANUFACTURERS

A. Acceptable Manufacturers:

1. Airtherm.
2. Enviro-Tec by Johnson Controls.
3. International Environmental Corporation.
4. McQuay International.
5. Trane.
6. Zehnder Rittling.

VERIFY THE REQUIRED PROJECT SPECIFIC DIMENSIONS FOR THE FAN COILS AND SCHEDULE OR SPECIFY ACCORDINGLY. MANUFACTURER'S STANDARD SIZE UNITS MAY NOT FIT PROPERLY IN EXISTING FACILITIES.

LIST FAN COIL SOUND POWER LEVELS IN THE FAN COIL SCHEDULE OR IN THE SPECIFICATIONS. BE PARTICULARLY CAUTIOUS FOR FAN COILS USED IN SOUND SENSITIVE AREAS.

THIS SPECIFICATION ASSUMES NONE OF THE FAN COIL CONTROLS ARE PROVIDED BY THE FAN COIL MFR. IF ANY CONTROLS ARE TO BE PROVIDED BY THE MFR.(3-SPEED RELAY BOARD, CONTROL TRANSFORMER, ETC.), EDIT THIS SPECIFICATION TO INCLUDE THOSE REQUIREMENTS. U-M SPECIFICATION 238219 "FLOOR MOUNTED FAN COIL UNITS UNDUCTED" IS A GOOD RESOURCE FOR CONTROL SPEC.S THAT MAY BE USEFUL WHEN SPECIFYING HORIZONTAL FAN COILS.

2.2 FAN COIL UNIT CONSTRUCTION

A. Dimensions: Maximum allowable dimensions as indicated on the Drawings.

B. Casing Construction:

1. Construction: Minimum 18 gauge, G60 galvanized or A40 galvannealed steel or as scheduled. Construct to eliminate racking.
2. Access panels shall be fully insulated and attached with fasteners on at least two opposite sides. No coil or drain piping or electrical connections shall pass through any access panel.
3. One inch duct collars if connected to ductwork.

C. Insulation: Exterior panels and access panels: Foil faced minimum 1-inch-thick, 1-1/2 lb density fiberglass fire resistant insulation complying with the following:

1. ASTM C 411 Standard Test.
2. Attach with adhesive complying with ASTM C 916.
3. Fire-Hazard classification, insulation and adhesive combined: Maximum flame-spread index of 25 and smoke-developed index of 50 when tested according to ASTM E 84.
4. Airstream Surfaces: Surfaces in contact with the airstream shall comply with requirements in ASHRAE 62.1.

2.3 HYDRONIC COILS

A. Hydronic Coils: Copper tube, minimum 0.025 inch wall thickness, with mechanically bonded aluminum fins, maximum of 12 fins per inch, copper headers and copper connections; rated for a minimum working pressure of 200 psig and a maximum entering-water temperature of 220 degrees F.

1. Factory test all coils as specified in the Source Quality Control article.
2. Include manual air vent and drain connections.
3. Chilled water and dual-temperature water coil casings, tracks, baffles, and supports shall be of stainless steel construction.

2.4 DRAIN PANS

A. Condensate Drain Pan: Fabricate drain pans and drain connections to comply with ASHRAE 62.1.

1. Drain pan: Stainless steel, insulated.
   a. Located under cooling coil allowing the drain pan to be fully inspected and cleaned.
   b. Slope to drain completely dry upon fan coil shutdown.

SPEC EDITOR: SELECT BELOW, ONE OF THE FOUR CODE REQUIRED METHODS OF PROTECTING AGAINST PRIMARY DRAIN PAN FAILURE AND SHOW DRAIN TERMINATION POINTS ON THE DRAWINGS. DELETE THE OTHER THREE OPTIONS.

2. Overflow drain pan connection: shall be on the same side and at a higher elevation than the primary drain pan connection.
3. Water-level detection device conforming to UL 508, factory wired to shut off the equipment prior to drain pan overflow. With auxiliary contact to simultaneously signal owner's Building Automation System.
4. Auxiliary drain pan with drain connection.
5. Auxiliary drain pan with capped or no drain connection, with water-level detection device conforming to UL 508, factory wired to shut off the equipment prior to auxiliary drain pan overflow. With auxiliary contact to simultaneously signal owner's Building Automation System.

2.5 FILTERS

A. Minimum arrestance according to ASHRAE 52.1, and a minimum efficiency reporting value (MERV) according to ASHRAE 52.2

1. Disposable Type: 2-inch pleated cotton-polyester media: 90 percent arrestance and a MERV A rating of 8 (or as scheduled) when tested per Appendix J of ASHRAE 52.2.

SPEC EDITOR: SELECT BELOW, DIRECTION OF FILTER REMOVAL. WHEN SELECTING, CONSIDER THE OBSTRUCTIONS TO FILTER REMOVAL AT THE FAN COIL MOUNTING LOCATION.

2. Provide filters that are removable horizontally from the casing.
3. Provide filters that are removable vertically from the casing.

SPEC EDITOR: FAN COILS ARE RARELY BELT DRIVEN. IF YOUR PROJECT REQUIRES BELT DRIVE, STRONGLY CONSIDER USING THE BLOWER COIL SPEC. OTHERWISE, EDIT BELOW TO INCLUDE SPEC FOR BELT DRIVE AND REVISE THE MOTOR TYPE.

2.6 FAN AND MOTOR:

A. Fan: Forward curved, double width, centrifugal, direct drive fan(s) mounted on removable fan deck or with easily removable fan and motor. Galvanized steel or aluminum wheels; galvanized-steel fan scrolls.

B. Motor Wiring: Terminate wiring in a junction box, external to the unit casing for a single point connection.

C. Provide a project specific wiring diagram affixed to the inside of each fan coil cabinet.

SPEC EDITOR: SELECT EITHER 3 SPEED PSC OR ECM MOTORS, BELOW.

SPEC EDITOR: ECM MOTORS AUTOMATICALLY ADJUST TO VARYING LOAD/STATIC PRESSURE (E.G. FILTER LOADING). SPEED IS TYPICALLY FACTORY SET BUT CAN BE RESET IN FIELD. ECM MOTORS ARE MORE ENERGY EFFICIENT AND ARE CLAIMED TO LAST LONGER THAN PSC MOTORS. THOUGH ECM MOTORS ARE GENERALLY PREFERRED, CAUTION MUST BE UTILIZED WHEN USING LARGE QUANTITIES OF SINGLE PHASE ECM MOTORS ON 3 PHASE CIRCUITS SINCE ECM GENERATED HARMONICS COULD OVERHEAT NEUTRAL CONDUCTORS, CONNECTORS, AND TRANSFORMERS. FOR HOSPITAL AND OTHER PROJECTS, ECM MOTOR LOCATION MUST BE CONSIDERED RELATIVE TO SENSITIVE ELECTRONIC EQUIPMENT, DUE TO POSSIBLE INTERFERENCE BY ECM GENERATED HARMONICS.

D. Motor: In compliance with Related Section "Motors", permanent split capacitor (PSC) type, 3 speed/3 tap, sleeve bearings.

E. Motor: In compliance with Related Section "Motors", electronically commutated motor (ECM). Designed for use with a single phase electrical input. Motor to be complete with and operated by a single phase integrated speed controller/inverter, speed adjustable manually or via external 0-10 VDC signal, built-in soft start/speed ramps, with permanently lubricated ball bearings.

2.7 SOURCE QUALITY CONTROL

A. Factory test all coils with a minimum of 350 psig air pressure while submerged under water.

B. Assemble and factory test each unit prior to shipping. Pressure test coils and piping packages for leaks. Cycle controls and operate fan at all speeds to check for proper operation. Correct all deficiencies prior to shipping.

PART 3 - EXECUTION

3.1 EXAMINATION AND PREPARATION

A. Examine areas to receive fan-coil units for compliance with requirements for installation tolerances and other conditions affecting performance.

B. Examine rough-in construction for piping and electrical connections to verify actual locations before fan-coil-unit installation.

C. Proceed with installation only after unsatisfactory conditions have been corrected.

3.2 INSTALLATION

A. Install fan coil units level and plumb and to comply with Quality Assurance Standards and manufacturer's installation instructions.

SPEC EDITOR: REGARDING THE BELOW PARAGRAPH: BE SURE TO SHOW OVERFLOW DRAIN ROUTED TO A CONSPICUOUS TERMINATION POINT, IF AN OVERFLOW DRAIN IS BEING USED.

3.3 CONNECTIONS

A. General piping installation requirements are specified in Related Documents Specification Sections. Drawings indicate general arrangement of piping, fittings, and specialties. Connect hydronic, condensate drain, and overflow drain piping to the unit.

3.4 TEMPORARY USE PRIOR TO OCCUPANCY

A. Start units for temporary use only with the express written permission of the Owner and compliance with all requirements of the Contract Documents.

B. Complete all drywall taping, sanding and finishing in an area prior to any early use of units serving that area.

C. Thoroughly clean unit of all grease, dirt, dust, etc.

D. Prior to placement into temporary service:

1. Perform manufacturer's pre-start protocol.
2. Perform commissioning activities.

E. Install a complete set of temporary filters in the unit equal to the quality and efficiency of the specified permanent filters. If the unit was equipped with pre-installed filters, they may be used for temporary service. Provide factory new, clean filters in units at final turn over to the Owner.

F. During temporary service, perform all manufacturer's recommended and required routine maintenance procedures, including filter replacement at regular intervals, as required. Continuously maintain a log of all such procedures completed. Store log at unit during temporary use period and include log as part of the final Operation and Maintenance Manual.

3.5 FIELD QUALITY CONTROL

A. Perform the following field tests and inspections and prepare test reports:

1. Test and adjust controls and safety devices. Replace damaged and malfunctioning controls and equipment.
2. Test unit operation with thermostat in all modes of operation.
3. Verify that drain pans collect all condensate and are properly sloped to drain so that no condensate is retained in the pans.
4. Remove and replace malfunctioning units and retest as specified above.

3.6 COMMISSIONING

A. Perform the commissioning activities as outlined in the Division 01 Section titled Commissioning and other requirements of the Contract Documents.

3.7 CLOSEOUT ACTIVITIES

A. Perform all commissioning activities, even if previously performed to ready for temporary use.

B. After unit has completed final commissioning and just prior to final acceptance by Owner:

1. Thoroughly clean unit of all grease, dirt, dust, etc., lubricate bearings, align and tighten belts.
2. Install a new, complete set of filters.
3. Touch up damaged galvanized surfaces with zinc rich paint, minimum 65 percent metallic zinc by weight. Touch up damaged painted surfaces with manufacturer provided touch-up paint.

3.8 OWNER TRAINING

A. In cooperation with the Commissioning Agent, train Owner's personnel on basic fan-coil unit maintenance by demonstrating the following: location of control devices, removal of access panels, filter replacement, and motor replacement.

END OF SECTION 238220

UNIVERSITY OF MICHIGAN
ARCHITECTURE, ENGINEERING AND CONSTRUCTION

ARCHITECTURE & ENGINEERING
326 East Hoover, Mail Stop B
Ann Arbor, MI 48109-1002
Phone: 734-764-3414
Fax: 734-936-3334

BuildingName
The Description of the Project
P00000000 0000

SPECIFICATION DIVISION 23

NUMBER SECTION DESCRIPTION

DIVISION 23 HEATING, VENTILATING AND AIR CONDITIONING (HVAC)
SECTION 238221 - BLOWER COIL UNITS

END OF CONTENTS TABLE

ECTION: JUNE 2011.

BLOWER COILS FOR THE PURPOSES OF THIS SPECIFICATION ARE UNITS OF GREATER THAN 1/2 HP (AND THEREFORE NORMALLY HAVE THREE PHASE MOTORS) USUALLY WITH BELT DRIVE FANS. BLOWER COILS TYPICALLY PROVIDE HIGHER AIR FLOWS AND FAN STATIC PRESSURES THAN ARE AVAILABLE FROM FAN COIL UNITS, IN A COMPACT PACKAGE. UPPER CFM LIMIT FOR STANDARD UNITS IS TYPICALLY 3000-4000 CFM.

BLOWER COILS ARE AVAILABLE IN NUMEROUS CONFIGURATIONS AND WITH MULTIPLE OPTIONS; THIS SPECIFICATION IS THEREFORE NECESSARILY OUTLINE IN NATURE. EDIT SECTION CAREFULLY TO MAKE IT PROJECT SPECIFIC. SPECIFICATIONS FOR MFR. PROVIDED CONTROLS, FACTORY PIPING PACKAGES, DX COILS, CABINETS FOR FINISHED SPACE USE, AND INTEGRAL GRILLES/REGISTERS/DIFFUSERS ARE NOT INCLUDED, AND MUST BE ADDED IF REQUIRED. U-M SPECIFICATION 238219 "FLOOR MOUNTED FAN COIL UNITS UNDUCTED" IS A GOOD RESOURCE FOR CONTROL SPEC.S AND OTHER SPEC. LANGUAGE WHICH MAY BE USEFUL WHEN SPECIFYING BLOWER COIL UNITS.

DIVISION 23 HEATING, VENTILATING AND AIR CONDITIONING (HVAC)
SECTION 238221 - BLOWER COIL UNITS

PART 1 - GENERAL

1.1 RELATED DOCUMENTS

INCLUDE PARAGRAPH 1.1.A AND B IN EVERY SPECIFICATION SECTION. EDIT RELATED SECTIONS 1.1.B TO MAKE IT PROJECT SPECIFIC.

A. Drawings and general provisions of the Contract, Standard General and Supplementary General Conditions, Division 1 Specification Sections, and other applicable Specification Sections including the Related Sections listed below, apply to this Section.

CAREFULLY VERIFY, EDIT AND COORDINATE RELATED SECTIONS.

B. Related Sections:

1. Section 220513: Motors.
2. Section 220719: Mechanical Systems Insulation.
3. Division 26: Electrical.

1.2 SUMMARY

A. Section Includes:

1. Horizontal and vertical blower coil units with motors 1/2 HP and greater, and hydronic coils.

1.3 COORDINATION

A. Coordinate dimensions and arrangement of blower coils with building elements including to maintain all maintenance clearances. Pay special attention to required electrical clearance.

1.4 SUBMITTALS

A. Submit the following product data for approval:

1. Heating and cooling coil total and sensible heat transfer capacity, entering and leaving water temperatures, water flow rate, water pressure drop, and air pressure drop.
2. Piping connections including size, material types, and dimensioned locations for each service.
3. Ductwork connections including sizes, locations, and methods of connections to mating ductwork.
4. Locations of electric power connections.
5. Details of equipment assemblies indicating dimensions, weights, required clearances, component locations, and location and size of each field connection. Include cabinet construction details: panel gauge, removal method for access panel, cabinet mounting method, and filter and fan motor removal method.
6. Details of motor including type, manufacturer and electrical characteristics.

7. Octave band and A-weighted sound power data for each unit type at fan coil rated capacity, tested per AHRI Standard 350.
8. Evidence of UL or ETL listing and labeling.

UNHIDE THE BELOW HIDDEN TEXT IF DISCONNECT SWITCH, CONTROLS, TRANSFORMER, OR 3 SPEED FAN RELAY BOARD ARE TO BE PROVIDED BY THE FAN COIL MFR.

9. Wiring Diagrams: Power, disconnect switch, controls, transformer and three-speed fan control relays.
10. Control transformer-sizing calculations.
11. Detailed information on fan control relay board.

B. Equipment schedule with the following information for each unit type:

1. Equipment tag.
2. Room number of thermostat location.
3. Model number.
4. Manufacturer's size designation.
5. Configuration (2-pipe or 4-pipe).
6. Number of coils, number of rows per coil, fin spacing for each coil.
7. Heating and cooling capacity.
8. Airflow rate and motor watts at each fan speed.

C. Maintenance schedules and repair part numbers and manufacturer of motors, coils, integral controls, relay board, control transformer, and air filters.

1.5 DELIVERY, STORAGE AND HANDLING

A. Mark each blower coil cabinet with the room number where it is scheduled to be installed.

B. Mark each blower coil shipping box with the room number where it is scheduled to be installed.

C. Support piping to prevent damage to pipe and coil headers during shipping.

D. Restrain fans and other components to prevent damage during shipping.

E. Shipping protection shall be provided by Manufacturer to insure that the interior and exterior of each unit is completely protected from dirt or weather. Duct and pipe openings must be covered with sealed sheet metal, plastic or other durable means to ensure unit cleanliness is maintained.

1.6 QUALITY ASSURANCE

A. Manufacturers and Products: The products and manufacturers specified in this Section establish the standard of quality for the Work. Subject to compliance with all requirements, provide specified products from the manufacturers named in Part 2.

B. Reference Standards: Products in this section shall be built, tested, and installed in compliance with the specified quality assurance standards; latest editions, unless noted otherwise.

1. ANSI/AHRI 350 Sound Rating of Non-Ducted Indoor Air-Conditioning Equipment.
2. ANSI/AHRI Standard 440: Performance Rating of Room Fan-Coils.
3. NFPA 70- National Electric Code.
4. NFPA 90A Installation of Air-Conditioning and Ventilating Systems.
5. ANSI/ASHRAE 62.1 Section 5 (Systems and Equipment) and Section 7 (Construction and Start-up).
6. ANSI/ASHRAE 90.1-2007 Energy Standards for Low Rise Buildings Except Low Rise Residential Buildings.
7. ASTM C916 - Standard Specification for Adhesives for Duct Thermal Insulation.
8. ASTM C411 Standard Test Method for Hot-Surface Performance of High-Temperature Thermal Insulation
9. ASTM C612 Standard Specification for Mineral Fiber Block and Board Thermal Insulation.
10. ASTM E84 Standard Test Method for Surface Burning Characteristics of Building Materials
11. ASTM A653 Standard Specification for Steel Sheet, Zinc-Coated (Galvanized) or Zinc-Iron Alloy-Coated (Galvannealed) by the Hot-Dip Process
12. Units shall be Underwriters Laboratories (UL) or Intertek (ETL) listed.

1.7 WARRANTY

A. Provide a complete parts and labor warranty for a minimum of one year from the date of Substantial Completion.

PART 2 - PRODUCTS

2.1 MANUFACTURERS

A. Acceptable Manufacturers:

1. Airtherm.
2. Enviro-Tec by Johnson Controls.
3. International Environmental Corporation.
4. McQuay International.
5. Trane.

VERIFY THE REQUIRED PROJECT SPECIFIC DIMENSIONS FOR THE BLOWER COILS AND SCHEDULE OR SPECIFY ACCORDINGLY. MANUFACTURER'S STANDARD HEIGHT UNITS MAY NOT FIT PROPERLY IN EXISTING FACILITIES.

LIST BLOWER COIL SOUND POWER LEVELS IN THE BLOWER COIL SCHEDULE OR IN THE SPECIFICATIONS. BE PARTICULARLY CAUTIOUS FOR BLOWER COILS USED IN SOUND SENSITIVE AREAS.

THIS SPECIFICATION ASSUMES NONE OF THE BLOWER COIL CONTROLS ARE PROVIDED BY THE BLOWER COIL MFR. IF ANY CONTROLS ARE TO BE PROVIDED BY THE MFR. (DISCONNECTS, CONTROL TRANSFORMER, ETC.), EDIT THIS SPECIFICATION TO INCLUDE THOSE REQUIREMENTS. U-M SPECIFICATION 238219 "FLOOR MOUNTED FAN COIL UNITS

UNDUCTED" IS A GOOD RESOURCE FOR CONTROL SPEC.S WHICH MAY BE USEFUL WHEN SPECIFYING BLOWER COIL CONTROLS.

2.2 BLOWER COIL UNIT CONSTRUCTION

A. Dimensions: Maximum allowable dimensions as indicated on the Drawings.

B. Casing Construction:

1. Construction: Minimum 18 gauge, G60 galvanized or A40 galvannealed steel or as scheduled. Construct to eliminate racking.
2. Access panels shall be fully insulated and attached with fasteners on at least two opposite sides. No coil or drain piping or electrical connections shall pass through any access panel.
3. One inch duct collars if connected to ductwork.

C. Insulation: Exterior panels and access panels: Foil faced minimum 1-inch-thick, 1-1/2 lb density fiberglass fire resistant insulation complying with the following:

1. ASTM C 411 Standard Test.
2. Attach with adhesive complying with ASTM C 916.
3. Fire-Hazard classification, insulation and adhesive combined: Maximum flame-spread index of 25 and smoke-developed index of 50 when tested according to ASTM E 84.
4. Airstream Surfaces: Surfaces in contact with the airstream shall comply with requirements in ASHRAE 62.1.

2.3 HYDRONIC COILS

A. Hydronic Coils: Copper tube, minimum 0.025 inch wall thickness, with mechanically bonded aluminum fins, maximum of 12 fins per inch, copper headers and copper connections; rated for a minimum working pressure of 200 psig and a maximum entering-water temperature of 220 degrees F.

1. Factory test all coils as specified in the Source Quality Control article.
2. Include manual air vent and drain connections.
3. Chilled water and dual-temperature water coil casings, tracks, baffles, and supports shall be of stainless steel construction.

2.4 DRAIN PANS

A. Condensate Drain Pan: Fabricate drain pans and drain connections to comply with ASHRAE 62.1.

1. Drain pan: Stainless steel, insulated.
   a. Locate under cooling coil allowing the drain pan to be fully inspected and cleaned.
   b. Slope to drain completely dry upon fan coil shutdown.

SELECT BELOW, ONE OF THE FOUR CODE REQUIRED METHODS OF PROTECTING AGAINST PRIMARY DRAIN PAN FAILURE AND SHOW DRAIN

TERMINATION POINTS ON THE DRAWINGS. DELETE THE OTHER THREE OPTIONS.

2. Overflow drain pan connection: shall be on the same side and at a higher elevation than the primary drain pan connection.
3. Water-level detection device conforming to UL 508, factory wired to shut off the equipment prior to drain pan overflow. With auxiliary contact to simultaneously signal owner's Building Automation System.
4. Auxiliary drain pan with drain connection.
5. Auxiliary drain pan with capped or no drain connection, with a water-level detection device conforming to UL 508, factory wired to shut off the equipment prior to auxiliary drain pan overflow. With auxiliary contact to simultaneously signal owner's Building Automation System.

2.5 FILTERS

A. Minimum arrestance according to ASHRAE 52.1, and a minimum efficiency reporting value (MERV) according to ASHRAE 52.2.

1. Disposable Type: 2 inch pleated cotton-polyester media: 90 percent arrestance and MERV A rating of 8 (or as scheduled) when tested per Appendix J of ASHRAE 52.2.

SELECT BELOW, DIRECTION OF FILTER REMOVAL. WHEN SELECTING, CONSIDER THE OBSTRUCTIONS TO FILTER REMOVAL AT THE BLOWER COIL MOUNTING LOCATION.

2. Provide filters that are removable horizontally from the casing.
3. Provide filters that are removable vertically from the casing.

IF MIXING DAMPERS ARE REQUIRED, INDICATE SUCH ON THE CONTRACT DRAWINGS.

2.6 INLET DAMPER MIXING SECTION

A. Provide when indicated on Drawings.

B. The outside and return airstreams shall be directed into each other in a mixing box by parallel blade damper assemblies oriented to facilitate mixing of the airstreams.

1. Section shall be constructed of minimum 18 gauge galvanized steel.
2. Two, steel, low leak parallel blade dampers in a heavy-gauge steel frame with extruded vinyl blade seals and flexible metal jamb seals.
3. Provide extended drive rod for externally mounted actuator connection.
4. Provide access panels for access to the section's internal components.

INDICATE THE FAN TYPE (FC, BI, INLET TYPE, ETC.)ON THE DRAWING SCHEDULES, OR ADD BELOW. FC IS TYPICAL. IF FAN IS DIRECT DRIVE, CONSIDER USING THE FAN COIL SPEC, OTHERWISE EDIT THE BELOW.

BELOW SECTION WILL ALLOW THE BLOWER COIL MFR. TO PROVIDE THEIR STANDARD QUALITY FANS AND DRIVES. FOR PROJECTS WITH LARGE QUANTITIES OF BLOWER COILS, CONSIDER EDITING THE BELOW TO SPECIFY HIGHER QUALITY FANS AND DRIVES. U-M SPEC SECTION 233400 "FANS " IS A RESOURCE FOR HIGH QUALITY FAN/DRIVE SPEC. LANGUAGE.

2.7 FAN AND MOTOR:

A. Fan: Galvanized steel or aluminum wheels; galvanized-steel fan scrolls. Adjustable speed belt drive with motor mounted on an adjustable steel base plate.

B. Motor: Provide motors in compliance with Related Section "Motors".

C. Motor Wiring: Terminate wiring in a junction box, external to the unit casing.

2.8 SOURCE QUALITY CONTROL

A. Factory test all coils with a minimum of 350 psig air pressure while submerged under water.

B. Assemble and factory test each unit prior to shipping. Cycle controls and operate fan at all speeds to check for proper operation. Correct all deficiencies prior to shipping.

PART 3 - EXECUTION

3.1 EXAMINATION AND PREPARATION

A. Examine areas to receive blower-coil units for compliance with requirements for installation tolerances and other conditions affecting performance.

B. Examine rough-in construction for piping and electrical connections to verify actual locations before blower-coil-unit installation.

C. Proceed with installation only after unsatisfactory conditions have been corrected.

3.2 INSTALLATION

A. Install blower coil units level and plumb and to comply with Quality Assurance Standards and manufacturer’s installation instructions.

REGARDING THE BELOW PARAGRAPH: BE SURE TO SHOW OVERFLOW DRAIN ROUTED TO A CONSPICUOUS TERMINATION POINT, IF AN OVERFLOW DRAIN IS BEING USED.

3.3 CONNECTIONS

A. General piping installation requirements are specified in other Related Documents Specification Sections. Drawings indicate general arrangement of piping, fittings, and specialties. Connect hydronic, condensate drain, and overflow drain piping to the unit.

3.4 TEMPORARY USE PRIOR TO OCCUPANCY

A. Start units for temporary use only with the express written permission of the Owner and compliance with all requirements of the Contract Documents.

B. Complete all drywall taping, sanding and finishing in an area prior to any early use of units serving that area.

C. Thoroughly clean unit of all grease, dirt, dust, etc.

D. Prior to placement into temporary service:

1. Perform manufacturer's pre-start protocol.
2. Perform commissioning activities.

E. Install a complete set of temporary filters in the unit equal to the quality and efficiency of the specified permanent filters. If the unit was equipped with pre-installed filters, they may be used for temporary service. Provide factory new, clean filters in units at final turn over to the Owner.

F. During temporary service, perform all manufacturer's recommended and required routine maintenance procedures, including filter replacement at regular intervals, as required. Continuously maintain a log of all such procedures completed. Store log at unit during temporary use period and include log as part of the final Operation and Maintenance Manual.

3.5 FIELD QUALITY CONTROL

A. Perform the following field tests and inspections and prepare test reports:

1. Test and adjust controls and safety devices. Replace damaged and malfunctioning controls and equipment.
2. Test unit operation with thermostat in all modes of operation.
3. Verify that drain pans collect all condensate and are properly sloped to drain so that no condensate is retained in the pans.
4. Remove and replace malfunctioning units and retest as specified above.

3.6 COMMISSIONING

A. Perform the commissioning activities as outlined in the Division 1 Section titled Commissioning and other requirements of the Contract Documents.

3.7 CLOSEOUT ACTIVITIES

A. Perform all commissioning activities, even if previously performed to ready for temporary use.

B. After unit has completed final commissioning and just prior to final acceptance by Owner:

1. Thoroughly clean unit of all grease, dirt, dust, etc., lubricate bearings, align and tighten belts.
2. Install a new, complete set of filters.
3. Touch up damaged galvanized surfaces with zinc rich paint, minimum 65 percent metallic zinc by weight. Touch up damaged painted surfaces with manufacturer provided touch-up paint

3.8 OWNER TRAINING

A. In cooperation with the Commissioning Agent, train Owner’s personnel on basic blower-coil unit maintenance by demonstrating the following: location of control devices, removal of access panels, filter replacement, and motor replacement.

END OF SECTION 238221

UNIVERSITY OF MICHIGAN
ARCHITECTURE, ENGINEERING AND CONSTRUCTION

ARCHITECTURE & ENGINEERING
326 East Hoover, Mail Stop B
Ann Arbor, MI 48109-1002
Phone: 734-764-3414
Fax: 734-936-3334

BuildingName
The Description of the Project
P00000000 0000

SPECIFICATION DIVISION 23

NUMBER SECTION DESCRIPTION

DIVISION 23 HEATING, VENTILATING AND AIR CONDITIONING (HVAC)
SECTION 238413 – STEAM HUMIDIFIERS

END OF CONTENTS TABLE

DIVISION 23 HEATING, VENTILATING AND AIR CONDITIONING (HVAC)
SECTION 238413 – STEAM HUMIDIFIERS

PART 1 - GENERAL

1.1 RELATED DOCUMENTS

INCLUDE PARAGRAPH 1.1.A AND B IN EVERY SPECIFICATION SECTION. EDIT RELATED SECTIONS 1.1.B TO MAKE IT PROJECT SPECIFIC.

A. Drawings and general provisions of the Contract, Standard General and Supplementary General Conditions, Division 1 Specification Sections, and other applicable Specification Sections including the Related Sections listed below, apply to this Section.

SPEC EDITOR: IN 1 AND 2 BELOW, SELECT PROPER SPEC SECTION NUMBER BY PROJECT. DELETE SUSTAINABLE DESIGN / LEED IF NOT APPLICABLE TO PROJECT. DELETE COMMISSIONING IF NOT APPLICABLE TO PROJECT.

B. Related Sections:

1. Section 018113: Sustainable Design Requirements.
2. Section 019110/019100: Commissioning
3. Section 220500: Common Work Results for Mechanical
4. Section 221113: Piping Materials and Methods
5. Section 220523: Valves
6. Section 220553: Mechanical Identification
7. Section 220719: Mechanical Systems Insulation
8. Section 221119: Domestic Water Piping Specialties
9. Section 232216: Steam and Condensate Piping Specialties
10. Section 230900: Mechanical Systems Controls
11. Division 26: Electrical

1.2 SUMMARY

A. Products specified in this section include the following:

1. Jacketed Steam Humidifiers
2. Steam Injection Dispersion Panels
3. Self-contained Electric Humidifiers
4. Condensate Drain Coolers

1.3 SUBMITTALS

A. Product Data: Include catalog illustrations, model, rated capacities, performance, weights, dimensions, component sizes, rough-in requirements, piping and wiring diagrams and details, materials of construction, accessories, operating and maintenance clearance requirements. Wiring diagrams shall be project specific, and differentiate between factory wiring and field wiring. Include shop drawings and fabrication drawings for equipment indicating piping connections, power and utility requirements, rigging, installation and support details and instructions. Include written sequence of operations for all controls.

B. Provide information for the following:

1. At conditions specific to the project:
    a. Non-wetting (absorption) distance, assuming air downstream of the humidifier is 90% R.H. at 52°F
    b. Air pressure drop across the humidifier array
    c. For steam injection dispersion panels, required orientation of tubes in the duct.
2. Strainers and steam traps
3. Humidifier actuator and temperature switch
4. Room and duct transmitters and proof of air flow switch
5. Electrode type self-contained Electric humidifiers:
    a. Published cylinder life based on incoming water conductivity
    b. Published replacement pricing
6. Condensate drain cooler
7. Installation, operation, and maintenance manuals

1.4 QUALITY ASSURANCE

A. Manufacturers and Products: The products and manufacturers specified in this Section establish the standard of quality for the Work. Subject to compliance with all requirements, provide specified products from the manufacturers named in Part 2.

B. Reference Standards: Products in this section shall be built, tested, and installed in compliance with the specified quality assurance standards; latest editions, unless noted otherwise.

1. Underwriters Laboratories

1.5 DELIVERY, STORAGE AND HANDLING

A. Ship all components in weather-proof wrap for storage outdoors. Protect control panels, pipe openings, and other sensitive components with heavy plastic or other durable means to ensure cleanliness and prevent damage during shipping and storage. Maintain protection during installation.

1.6 WARRANTY

A. Provide a complete warranty for parts and labor for a minimum of one year from the date of Substantial Completion.

PART 2 - PRODUCTS

2.1 ACCEPTABLE MANUFACTURERS

A. Basis of Design and model numbers (where provided) are Dri-Steem. Subject to compliance with all requirements and matching the features of the Basis of Design and model numbers, provide products from any of the below manufacturers.

1. Armstrong
2. Spirax Sarco
3. Nortec
4. Hermidifier
5. Dri-Steem

SPEC EDITOR: INSTALLATION REQUIREMENTS ARE SPECIFIC FOR EACH TYPE HUMIDIFIER, PARTICULARLY FOR STEAM INJECTION DISPERSION PANELS. CAREFULLY REVIEW MANUFACTURER'S LITERATURE TO ASSURE THAT THE TYPE YOU ARE SELECTING WILL WORK PROPERLY UNDER YOUR PROJECT CONDITIONS. MAKE SURE TO PROVIDE A DETAIL ON THE PROJECT DRAWINGS INDICATING INSTALLATION REQUIREMENTS SPECIFIC TO THE HUMIDIFIER(S) SELECTED.

SPEC EDITOR: BE SURE TO INDICATE THE REQUIRED NON-WETTING (ABSORPTION) DISTANCE FOR EACH HUMIDIFIER AND THE DUCT AIR PRESSURE DROP ON THE HUMIDIFIER SCHEDULE (PREFERRED) OR IN THIS SPECIFICATION. IT IS ALWAYS PREFERRED TO USE CENTRALLY GENERATED STEAM WHEN AVAILABLE. DISCUSS SPECIAL SITUATIONS THAT MAY REQUIRE USE OF STEAM TO STEAM ("CLEAN STEAM") HUMIDIFIERS OR GAS FIRED HUMIDIFIERS WITH THE DESIGN MANAGER.

2.2 JACKETED STEAM HUMIDIFIERS

A. Steam separator type that discharges dry steam into the air stream through a steam jacketed dispersion tube or manifolded dispersion tubes. Humidifiers shall be complete with Y-type steam supply strainer, modulating steam control valve, condensate temperature switch and steam traps; all provided by the humidifier manufacturer. Provide manifolded multiple dispersion tube type when required to meet the capacity requirements or the conditions at the mounting location, including the indicated non-wetting (absorption) distance. All components shall be rated for a minimum 100 PSIG steam working pressure.

B. The humidifier shall provide absorption characteristics that preclude wetting on any in-duct surfaces within the indicated absorption distance downstream of the humidifier while maintaining conditions of 90% (maximum) relative humidity at a minimum temperature of 52°F in the duct air stream.

C. Unless indicated otherwise, the air pressure loss across the humidifier array shall not exceed 0.10" W.C. at a duct air velocity of 1200 FPM.

D. Provide type 304 stainless steel dispersion tubes, manifold and separator.

E. Dispersion tubes shall be surrounded by a steam jacket and shall span the width of duct.

SPEC EDITOR: A PNEUMATICALLY ACTUATED CONTROL VALVE IS SPECIFIED. IF CHANGED TO ELECTRIC ACTUATION, THE SPECIFICATION FOR THE PNEUMATIC CONDENSATE TEMPERATURE SWITCH MUST BE EDITED AS WELL.

F. Provide bronze or stainless steel, fail closed, pneumatic steam control valve for operation with a modulating 3-15 PSI control air signal, minimum 13:1 rangeability and ANSI Class 5 Shutoff.

G. Provide a pneumatic condensate temperature switch for interlocking with control valve. Switch shall be normally closed and shall prevent steam flow to dispersion tubes upon cold start or flooded condensate line.

H. Steam traps shall be per Related Section, sized and provided by the humidifier manufacturer. Provide F & T or thermostatic traps that allow modulating steam control valve service.

SPEC EDITOR: DESIGNER SHOULD INDICATE IN THE HUMIDIFIER SCHEDULE IF THE HUMIDIFIER STEAM SUPPLY IS GENERATED BY RO/DI WATER

I. Provide Type 316 stainless steel dispersion tubes, manifold, separator, and interconnecting piping; and stainless steel strainers, control valve and traps when fed by clean steam (steam generated with RO/DI water).

SPEC EDITOR: THE REQUIREMENT FOR INSULATED TUBES IS CARRIED AS HIDDEN TEXT BELOW. DESIGNER SHOULD EVALUATE THE ENERGY PENALTY FROM INCREASED AIR PRESSURE DROP CAUSED BY INSULATED TUBES VERSUS THE ENERGY SAVED. THE ENERGY CODE REQUIRES THAT JACKET STEAM AUTOMATICALLY TURNS OFF WHEN HUMIDIFICATION IS NOT REQUIRED. THIS GENERALLY NEGATES MUCH OF THE BENEFIT OF INSULATED DISPERSION TUBES. DESIGNER SHOULD CONSIDER IF EACH HUMIDIFIER REQUIRES A JACKET STEAM CONTROL VALVE OR IF THE STEAM SUPPLY TO MULTIPLE JACKETS CAN BE TURNED OFF BY A COMMON CONTROL VALVE. A COMMON VALVE MAY BE POSSIBLE IF THE HUMIDIFIERS OPERATE AT THE SAME TIME SUPPLYING ZONES WITH THE SAME SETPOINT. ZONES WITH A UNIQUE SETPOINT SHOULD HAVE THEIR OWN JACKET STEAM CONTROL VALVE. NOTE THAT JACKET STEAM CONTROL VALVES SHOULD GENERALLY BE OPERATED BASED ON AN ACTUAL CALL FOR HUMIDITY, AS OPPOSED TO ON A SEASONAL BASIS.

J. Dispersion tubes shall be insulated with 1/2" fiberglass, enclosed in a stainless steel wrapper.

2.3 STEAM INJECTION DISPERSION PANELS

SPEC EDITOR: FOR INSTALLATION IN AHU'S OR DUCTS AND WHERE AVAILABLE ABSORPTION DISTANCE IS VERY SMALL, 3' OR LESS.

SPEC EDITOR: WHEN ABSORPTION DISTANCES PERMIT, JACKETED TYPE HUMIDIFIERS, SPECIFIED IN THE ARTICLE ABOVE, ARE PREFERRED OVER STEAM INJECTION DISPERSION PANELS DUE TO LOWER INITIAL COST AND HIGHER RELIABILITY.

SPEC EDITOR: BASIS OF DESIGN FOR THIS SPEC IS DRI-STEEM LV/LH (TYPE A) AND DRISTEEM XV (TYPE B). LV OR LH CAN BE USED WITH PRESSURIZED OR NON-PRESSURIZED STEAM, CONDENSATE MUST DRAIN BY GRAVITY. XV CAN ONLY BE USED WITH PRESSURIZED STEAM, BUT CAN LIFT CONDENSATE. EDIT SPEC TO SELECT REQUIRED TYPE.

SPEC EDITOR: TYPE A HUMIDIFIER MUST BE MOUNTED HIGH ENOUGH TO ALLOW GRAVITY DRAINING OF CONDENSATE AND REQUIRES A DEEP PLUMBING TRAP (7"-10" DEEP) FOR CONDENSATE DISPOSAL, THEREFORE MAKE SURE MOUNTING LOCATION IS HIGH ENOUGH TO ACCOMMODATE SUCH A TRAP. TYPE B MAY BE SPECIFIED WHEN THE MOUNTING LOCATION IS TOO LOW TO ACCOMMODATE TYPE A, PROVIDED PRESSURIZED STEAM IS AVAILABLE.

SPEC EDITOR: BE SURE TO SCHEDULE THE NON-WETTING (ABSORPTION) DISTANCE AND THE DISPERSION PANEL DUCT AIR PRESSURE DROP ON THE HUMIDIFIER DRAWING SCHEDULE.

A. Ultra-sorb LV/HV Multi-tube style - TYPE A:

1. Multi-tube non-jacketed style humidifier for use with pressurized or non-pressurized steam and gravity draining of condensate. Each panel shall consist of a steam supply header/separator, a condensate collection header and a bank of closely spaced steam dispersion tubes spanning the distance between the two headers. Stainless steel construction. Humidifiers shall be complete with Y-type steam supply strainer, modulating steam control valve, condensate temperature switch and steam traps; all provided by the humidifier manufacturer. All components shall be rated for a minimum 100 PSIG steam working pressure.
2. Each steam tube outlet shall contain an orifice sized for its required steam capacity. The humidifier shall provide absorption characteristics that preclude wetting on any in-duct surfaces within the indicated absorption distance downstream of the humidifier while maintaining conditions of 90% (maximum) relative humidity at a minimum temperature of 52°F in the duct air stream.
3. Unless indicated otherwise, the air pressure loss across the humidifier array shall not exceed 0.10" W.C. at a duct air velocity of 1200 FPM.
4. Provide horizontally or vertically oriented tubes as required for the specific location, considering the steam pressure available at that location.
5. Each packaged humidifier panel assembly of tubes and headers shall be contained within a galvanized metal casing to allow convenient duct mounting or to facilitate the stacking of and/or the end-to-end mounting of multiple panels in ducts or air handler casings. Provide multiple panels and all related accessories for the panels and installation, in order to achieve the specified capacities.
6. Provide type 304 stainless steel tubes and headers. All joints shall be heli-arc welded.
7. Provide bronze or stainless steel, fail closed, pneumatic steam control valve for operation with a modulating 3-15 PSI control air signal, minimum 13:1 rangeability and ANSI Class 5 Shutoff.

SPEC EDITOR: DESIGNER SHOULD INDICATE IN THE HUMIDIFIER SCHEDULE IF THE HUMIDIFIER STEAM SUPPLY IS GENERATED BY RO/DI WATER

8. Provide Type 316 stainless steel humidifier construction and stainless steel strainer and control valve when fed by clean steam (steam generated with RO/DI water).

SPEC EDITOR: THE REQUIREMENT FOR INSULATED TUBES IS CARRIED AS HIDDEN TEXT BELOW. ENGINEER MUST EVALUATE IF HIGH-EFFICIENCY INSULATED TUBES ARE COST EFFECTIVE AND APPROPRIATE FOR THE PROJECT.

9. High-efficiency insulated tubes shall be used to substantially reduce dispersion-generated condensate and airstream heat gain. Tube insulation shall be 1/8" thick polyvinylidene fluoride insulation (PVDF).

B. Ultra-sorb XV Multi-tube Style - TYPE B:

1. Multi-tube non-jacketed style humidifier for use with pressurized steam, with integral heat exchanger to provide for condensate lifting. Each panel shall consist of a steam supply header/separator, a condensate collection header and a bank of closely spaced steam dispersion tubes spanning the distance between the two headers. Stainless steel construction. Humidifiers shall be complete with Y-type steam supply strainer, modulating steam control valve, condensate temperature switch and steam traps; all provided by the humidifier manufacturer. All components shall be rated for a minimum 100 PSIG steam working pressure.
2. Each steam tube outlet shall contain an orifice sized for its required steam capacity. The humidifier shall provide absorption characteristics that preclude wetting on any in-duct surfaces within the indicated absorption distance downstream of the humidifier while maintaining conditions of 90% (maximum) relative humidity at a minimum temperature of 52˚F in the duct air stream
3. Unless indicated otherwise, air pressure loss across humidifier panel shall not exceed 0.10" W.C. at a duct air velocity of 1200 FPM.
4. Provide horizontally or vertically oriented tubes as required for the specific location, considering available steam pressure at that location.
5. Each packaged humidifier panel assembly of tubes and headers shall be contained within a galvanized metal casing to allow convenient duct mounting or to facilitate the stacking of and/or the end-to-end mounting of multiple panels in ducts or air handler casings. Provide multiple panels and all related accessories for the panels and installation, in order to achieve the specified capacities.
6. Provide type 304 stainless steel tubes and headers. All joints shall be heli-arc welded.

SPEC EDITOR: A PNEUMATICALLY ACTUATED CONTROL VALVE IS SPECIFIED. IF CHANGED TO ELECTRIC ACTUATION, THE SPECIFICATION FOR THE PNEUMATIC CONDENSATE TEMPERATURE SWITCH MUST BE EDITED AS WELL.

7. Provide bronze or stainless steel, fail closed, pneumatic steam control valve for operation with a modulating 3-15 PSI control air signal, minimum 13:1 rangeability and ANSI Class 5 Shutoff.
8. Provide a pneumatic condensate temperature switch for interlocking with control valve. Switch shall be normally closed and shall prevent steam flow to dispersion tubes upon cold start or flooded condensate line.
9. Provide an integral steam heat exchanger with steam trap arranged to vaporize dispersion-tube-generated steam condensate and return pressurized condensate to a condensate return main.

SPEC EDITOR: THE REQUIREMENT FOR INSULATED TUBES IS CARRIED AS HIDDEN TEXT BELOW. ENGINEER MUST EVALUATE IF HIGH-EFFICIENCY INSULATED TUBES ARE COST EFFECTIVE AND APPROPRIATE FOR THE PROJECT

10. High-efficiency insulated tubes shall be used to substantially reduce dispersion-generated condensate and airstream heat gain. Tube insulation shall be 1/8" thick polyvinylidene fluoride insulation (PVDF).

2.4 SELF-CONTAINED ELECTRIC HUMIDIFIERS

A. Packaged wall mounted self-contained U.L. listed electric humidification unit providing all required steam generation equipment and controls, to provide atmospheric pressure steam generation. Provide either Steam Injection Distribution Panels for steam injection into ducts, or Blower Pack for direct space applications, as indicated.

SPEC EDITOR: SELECT EITHER ELECTRODE TYPE OR RESISTANCE HEATING ELEMENT TYPE, DELETE TYPE NOT USED. MAKE SURE SPEC OR DRAWINGS ALSO INDICATE THE REQUIRED STEAM INJECTION SYSTEM FOR USE WITH THE ELECTRIC HUMIDIFIER: EITHER STEAM INJECTION DISTRIBUTION PANELS OR BLOWER PACK.

SPEC EDITOR: ELECTRODE TYPE MUST USE TAP WATER, NOT RO/DI WATER. PLASTIC STEAM CYLINDERS ARE DISPOSABLE AND NEED TO BE CHANGED REGULARLY; EVEN WITH DISPOSABLE CYLINDERS THIS TYPE IS LESS RELIABLE THAN RESISTANCE TYPE SINCE DRAINS AND DRAIN VALVES CAN PLUG. ACCURACY OF CONTROL IS +/- 5%, NOT RECOMMENDED WHERE HIGH ACCURACY CONTROL IS DESIRED.

SPEC EDITOR: RESISTANCE HEATING ELEMENT TYPE USES RO/DI WATER AND PROVIDES BETTER CONTROL ACCURACY THAN ELECTRODE TYPE, TYPICALLY +/- 3% OR BETTER. CYLINDERS DO NOT NEED TO BE REPLACED; MORE RELIABLE THAN ELECTRODE TYPE WHEN RO/DI FEED WATER IS USED. CAPABLE OF OPERATION WITH TAP WATER (IF SPECIFIED THAT WAY, NOT SPECIFIED THAT WAY BELOW) BUT WILL RAPIDLY FOUL. CITY OF ANN ARBOR WATER CONDUCTIVITY WAS 500-700 MICRO-MHOS (UMHOS) (RECORDED DURING FY 2010-2011).

B. Furnish electrode heating element type humidifier capable of boiling water at the required capacity with a minimum conductivity of 125 umho (micro-mho).

1. Replaceable plastic steam cylinder.
2. Controller shall monitor water conductivity and automatically drain and flush unit to reduce solids build-up and optimize humidifier performance.
3. Published cylinder life based on incoming water conductivity.
4. Published replacement pricing.
5. Pre-notification of automatic shutdown at end of cylinder life
6. Power to the heating elements shall be controlled through the actuation of contactors and solid state relays, to provide a control accuracy of +/- 5% RH or better.

C. Furnish resistance heating element type humidifier capable of boiling water at the required capacity using reverse osmosis or de-ionized water (conductivity of 50 umho (micro-mho)or less).

1. Serviceable stainless steel steam cylinder.
2. Controller shall automatically drain and flush unit to reduce solids build-up and optimize humidifier performance.
3. Corrosion resistant heating elements.
4. Water level control shall be provided by float switch or float valve located in a portion of the tank segregated from the main steam generating portion of the tank.
5. Power to the heating elements shall be controlled through the actuation of contactors and solid state relays, to provide a control accuracy of +/- 3% RH or better.

D. Over temperature safety switch to prevent heating element failure.

E. Water make-up system with inlet strainer, solenoid valve with flow regulator, and fill tee or cup with built-in air gap to prevent back siphoning

F. Solenoid operated automatic drain valve.

G. Bottom drain outlet. Large perforated strainer at drain outlet to prevent blockage of drain valve or drain lines

H. A system on/off switch with power indicator light, external to the humidifier enclosure.

I. Enclosure to be minimum 18 gauge steel and powder-coat painted to prevent against corrosion. The electrical and steam generating compartments shall be separate, but contained within the same cabinet to minimize field wiring. The cylinder access door shall be lockable with a key. A door interlock switch shall prevent humidifier operation when the access door is open.

SPEC EDITOR: DELETE BLOWER PACK PARAGRAPH BELOW IF A BLOWER PACK IS NOT REQUIRED. BLOWER PACKS ARE AVAILABLE THAT PRODUCE NO VISIBLE STREAM TRAIL, BUT TYPICALLY ONLY FOR LOW STEAMING CAPACITY HUMIDIFIERS. IF NO VISIBLE STEAM TRAIL IS DESIRED, MODIFY THE BELOW TO REQUIRE THAT FEATURE, AFTER VERIFYING THAT THE HUMIDIFIER MANUFACTURER CAN PROVIDE SUCH A BLOWER PACK FOR YOUR REQUIRED STEAM OUTPUT.

J. Provide a fan blower pack to disperse steam directly into the room air. Blower pack shall be 120 VAC and shall be capable of being mounted integral to the top of the humidification unit, or remotely via interconnecting piping. Provide an air flow proving switch to prevent humidification when the blower fan is off.

K. Controls

1. Provide a UL listed and labeled microcomputer based controller with the following capabilities:
   a. Control of humidity to within +/- 3% RH (resistance heating element type humidifiers) or +/- 5% RH of set point (electrode heating element type humidifiers).
   b. Proportional/integral/derivative (PID) algorithms for humidifier control.

c. Integral 24 VDC power supply of adequate size to power controllers and all axillary devices (humidity transmitters, etc.)
d. LCD or LED display and integral controller keypad to allow adjustment of all humidifier settings, programming of alarms and viewing of alarm history.
e. High water sensor circuitry to prevent over filling.
f. Integral drain water tempering feature. Drain water shall be automatically cooled to below 140°F before entering the drain.
    1) If unit cannot provide this feature, provide an external condensate drain cooler.
g. Automatic drain and flush feature to reduce the concentration of conductive ions in the water and reduce mineral build-up.
h. Automatic off-season shut-down [user adjustable, factory default set after 3 days of "no call"] to completely drain the tank(s) and automatically restart unit on call for humidity.
i. External fan control: controller shall have the ability to cycle an external steam dispersion fan on and off in conjunction with a call for humidification.
j. Fan control off-delay feature. When the humidifier unit controls an external fan, fan "off" is time delayed after steam output stops.
k. A dry contact rated 10 amps at 24 VDC, which can be programmed to energize when any humidifier alarm condition occurs.
l. Password protection. Controller adjustment shall only be enabled after a password is entered. It shall be possible to disable the password protection feature.
m. For duct mounted humidifiers, controller shall limit duct humidity downstream of the humidifier to a user adjustable set point by modulating humidifier output, and prevent humidifier operation if duct air flow is not present.
n. For space mounted humidifiers, controller shall prevent humidifier operation if air flow is not present at the blower pack fan.
o. The controller shall monitor and display the following conditions, minimum:
    1) Space relative humidity
    2) Space relative humidity set point
    3) Space dew point
    4) Space dew point set point
    5) Duct relative humidity
    6) Duct high relative humidity limit set point
    7) Air flow status
    8) Tank temperature
    9) Tank level
    10) All units shall be displayed in inch-pounds.

2. Controller shall accept two wire 4-20mA input signals for space humidity, duct humidity, and room temperature.
3. Provide the following auxiliary devices for use with the humidifier controller:
    a. 4-20 mA room humidity transmitter

b. 4-20 mA duct relative humidity transmitter (duct mounted humidifiers only)
c. Air flow proving switch
d. Auxiliary devices shall comply with Related Section Mechanical Systems Control, and be compatible with the humidifier controller.

4. Controller shall be capable of operation in ambient conditions of 32˚F to 140˚F and a humidity range of 5% to 95%, non-condensing.
5. The controller shall hold its software in non-volatile memory. On-line field modified data entries shall be stored in flash memory to prevent accidental loss of data due to power loss, voltage surge or spike. In the event of a complete power outage, all field and factory settings shall remain stored and shall automatically be restored when power is restored

SPEC EDITOR: THE BELOW FEATURE (IN HIDDEN TEXT) IS NOT AVAILABLE ON ALL BRANDS OR MODELS WITHIN A BRAND. IF YOUR PROJECT REQUIRES THIS FEATURE, RESEARCH AND SPECIFY SPECIFIC MFR.S AND MODELS THAT CAN PROVIDE IT.

6. Provide humidifier set point reset based on window glass temperature, to prevent condensation on windows. Provide control algorithm and 4-20 mA temperature transmitter with a RTD designed to be mounted on a window surface.

2.5 CONDENSATE DRAIN COOLER

A. Provide a stainless steel drain cooler for condensate water being discharged. Provide a unit of size and volume adequate for handling the expected discharge from the humidification system.

B. Drain cooler shall include a self-actuated thermostatically controlled water valve to control mixing.

C. Drain cooler shall be capable of metering a sufficient amount of cold water into the mixing chamber to temper 212˚F (100˚C) water to a 140˚F (60˚C) max. discharge temperature

D. Cooler dimensions must allow gravity flow of condensate to the waste discharge point based on the height of the humidifier's condensate discharge connection.

E. Provide all mounting components and hardware required to properly support the drain cooler, independent of the humidifier unit.

F. Provide a vacuum breaker in the unit to prevent backflow into the potable water systems.

PART 3 - EXECUTION

3.1 EXAMINATION AND PREPARATION

A. Store units protected from weather, dirt, water, and construction debris.

B. Examine roughing-in for equipment support, piping, and electrical connections to verify actual locations, sizes, and other conditions affecting equipment performance, maintenance, and operations. Proceed with installation only after unsatisfactory conditions have been corrected.

3.2 INSTALLATION

A. Install in strict compliance with manufacturer's installation instructions and Related Sections. Maintain manufacturer's recommended clearances for service and maintenance.

B. Route steam line to humidifier by connecting to top of steam main (either straight up or at 45 degrees (preferred)). Provide a steam trap upstream of the humidifier if the top of steam main could not be tapped or if the distance between the steam main and the humidifier exceeds ten feet.

C. Install separate devices furnished by manufacturer and not factory installed, including but not limited to control valve, steam traps, and temperature switch.

D. Provide and install any manufacturer’s accessory devices necessary or recommended to meet the particular needs of the humidifier installation.

E. Install condensate drain coolers where indicated or required.

F. Install to provide a minimum of ten feet of straight, unobstructed (no filters, turning vanes, etc.) duct downstream from the humidifier, unless a shorter non-wetting (absorption) distance upstream of such obstructions is indicated on the reviewed/approved submittal.

G. Direction of steam injection relative to air flow is dependent on humidifier features and duct orientation. Review manufacturer’s installation instructions carefully and install accordingly.

H. Seal all duct penetrations made as a result of humidifier installation. Use sealant appropriate for service.

SPEC EDITOR: DELETE THE INSTALLATION INSTRUCTIONS FOR HUMIDIFIER TYPES THAT ARE NOT USED ON THE PROJECT.

I. Jacketed Steam Humidifiers

1. Install the humidifier’s discharge steam trap to allow the condensate piping to drain by gravity. Do not lift condensate piping downstream of this steam trap.

J. Steam Injection Dispersion Panels

1. Dispersion panels are typically designed for a specific duct orientation (either horizontal or vertically oriented duct). Verify that the dispersion panel supplied is the correct model for the duct orientation at the humidifier mounting location.
2. Rotate tubes to the correct orientation to inject steam into the air stream, typically perpendicular to the air stream.
3. Install all required p-traps. Do not lift condensate discharging from p-traps

SPEC EDITOR: WHEN SELF CONTAINED ELECTRIC HUMIDIFIERS ARE USED, PROVIDE A DETAIL ON THE DRAWINGS INDICATING THE REQUIRED PIPING CONNECTIONS. HUMIDIFIER DRAINS MUST BE ROUTED TO A BUILDING FLOOR DRAIN VIA AN AIR GAP. THIS AIR GAP WILL BE A SOURCE OF FLASH STEAM AND SHOULD BE INSTALLED AT LOCATIONS WHERE THE FLASH STEAM WILL NOT CAUSE DAMAGE. INDICATE THE ROUTE OF THE STEAM VAPOR PIPING AND INDICATE IF HOSE OR PIPING IS TO BE UTILIZED. REVIEW MANUFACTURERS LITERATURE AND ASSURE VAPOR PIPING CAN BE INSTALLED TO MEET REQUIRED PITCH AND DRAINAGE REQUIREMENTS.

SPEC EDITOR: WHEN A FAN BLOWER PACK IS USED, THE DESIGNER MUST INDICATE A MOUNTING LOCATION THAT WILL PREVENT CONDENSATION OF THE VAPOR TRAIL ONTO ROOM SURFACES.

K. Self-Contained Electric Humidifiers

1. Mount humidifier and accessories at locations indicated on the drawings, maintaining manufacturers recommended service clearances.
2. Connect power to the humidifier. Comply with Division 26 requirements.
3. Install water supply and drain piping to each unit in compliance with manufacturer's recommendations, including pipe sizes.
   a. Install an isolation valve, water hammer arrestor, and a strainer in the supply piping to the humidifier. Install the strainer between the isolation valve and the humidifier.
   b. When plastic pipe is used for water supply piping, provide a minimum of 3 feet of stainless steel tubing for the last 3 feet of the supply piping before connecting to the unit.
   c. Install unions at each supply and drain connection.
   d. Install traps in supply and drain piping as recommended by the unit manufacturer.
   e. All drain piping shall be type L copper pipe. When humidifiers are not installed in mechanical rooms or similar spaces that are typically inaccessible to occupants, insulate the tank/flush drain with ½" thick insulation per Related Section. Overflow drains do not require insulation.
4. Connect drain piping via an air gap fitting to the building drain. Prior to connecting to building drain, install a condensate drain cooler for units that are not equipped with an integral drain water tempering feature.
5. Install steam vapor hose or piping, as indicated, between steam dispersion device and humidifier.
   a. Piping material shall be per Related Section.
   b. When piping is used, install a union at the humidifier to allow humidifier removal.
   c. Electrically ground the piping. Bond the ground to the humidifier cabinet ground.
   d. When hose is used, use approved hose, fittings, and clamps obtained from the humidifier manufacturer.
   e. Pitch steam vapor hose or piping to allow condensate to drain back into the humidifier.

f. Install steam condensate drains where required. Route such drains back to the humidifier tank fill connection in lieu of to a building drain where possible and when permitted by humidifier manufacturer.
   1) Where routed to building drains, provide condensate cooler and route drain through cooler before connection to building drain.

g. Insulate hose/piping per Related Section.

6. Install steam dispersion devices.
7. Install the fan blower pack when utilized.
   a. Mount blower pack to prevent the discharged steam from condensing on nearby surfaces.
   b. Install power to blower pack in compliance with Division 26 requirements.
   c. When mounted remote from the humidifier, install steam vapor hose or piping between humidifier and blower pack, pitched to allow condensate to drain back to humidifier. Install drain piping, complying with the same requirements indicated above for the humidifier drain piping.
8. Install separate devices furnished by manufacturer and not factory installed, including but not limited to, room humidity transmitter, proof of air flow switch, duct high limit humidity transmitter, and control wiring between fan blower pack and humidifier.
   a. Install wiring in conformance with Related Section (Mechanical Systems Controls), utilizing approved contractors listed in that section.
9. Program the humidifier controller.

3.3 STARTUP

A. Adhere to manufacturer’s start-up instructions.

B. Assure that actuators operate freely, close off steam tightly (no leaking steam discharges into the duct or space), and that the stem packing is not leaking. Verify proper steam trap operation.

C. For dispersion panel types, check dispersion tubes for leaks at slip couplings while steam is being injected into the duct or space; repair any leaks.

D. When provided as part of the humidifier package, verify that the air flow proving switch and duct high limit humidistat operate properly. Prime any p-traps and verify he operation of temperature switches, float switches, and similar devices specified or provided, prior to putting humidifier into operation.

E. For self-contained electric humidifiers, adjust all control parameters as directed by the Commissioner and as appropriate for the project, and place into service. For projects without a Commissioner, consult the project engineer for direction regarding control parameter settings. Record all settings and include in the O&M manual.

3.4 COMMISSIONING

A. Perform Commissioning activities per Related Sections above.

SPEC EDITOR: TRAINING IS TYPICALLY ONLY REQUIRED FOR SELF CONTAINED ELECTRIC HUMIDIFIERS, FOR OTHER TYPES DELETE THE ARTICLE BELOW.

3.5 TRAINING

A. Provide a qualified service technician from the Manufacturer's staff to provide training.

B. Train Owner's maintenance personnel on equipment operation, start-up and shutdown, trouble-shooting, servicing and preventative maintenance procedures. Review the data contained in the Operating and Maintenance Manuals with Owner's personnel. Training shall occur separate from startup activities.

1. Provide 2 hours of training minimum.

END OF SECTION 238413

OUT TO BID

DESIGN GUIDELINES

1.0 CODES AND REGULATORY AGENCIES

2.0 PROJECT PROCEDURES

3.0 SUSTAINABILITY

4.0 SPECIAL INSTRUCTIONS TO DESIGNERS

5.0 SPECIAL BUILDING AREAS

6.0 TECHNICAL REQUIREMENTS

7.0 MASTER SPECIFICATIONS

7.1 ARCHITECTURAL

7.2 MECHANICAL

7.3 ELECTRICAL

7.4 SITE/CIVIL

8.0 PREFERRED MANUFACTURERS LIST

9.0 STANDARD DETAILS AND SCHEDULES

10.0 CHANGES TO DESIGN GUIDELINES

7.3 ELECTRICAL

		Last Revision	Replaces Section
Division 26 Electrical			
260500 Common Work Results for Electrical	W	April 2016	16010
260513 Medium, Low & Control Voltage Cables	W	November 2014	16120
260526 Grounding & Bonding for Electrical	W	December 2012	16450
260533 Electrical Materials & Methods	W	March 2015	16050
260543 Underground Services for Electrical Systems	W	March 2014	16110
260800 Electrical Acceptance Tests	W	August 2013	16950
261000 Medium Voltage Electrical Distribution	W	December 2012	16300
261100 Unit Substations	W	October 2017	16313 16315 16316
261102 Installation of Pre-Purchased Unit Substations	W	December 2012	16314
262000 Low Voltage Electrical Distribution	W	August 2013	16400
262726 Wiring Devices	W	October 2015	16140
262900 Motor Controls	W	August 2013	16480
263000 Engine-Generator System	W	June 2016	16231
265100 Interior Lighting	W	June 2015	16511
265600 Exterior Lighting	W	December 2015	16521
Division 27 Communications			
272000 Voice & Data Communications	W	August 2014	16740
275313 Clock Systems	W	December 2012	16730
Division 28 Electronic Safety and Security			
281300 Access Control & Monitoring System	W	February 2016	16727
281600 Security Systems	W	December 2012	16724

BUILDING COMMISSIONING

CONTRACTS & AGREEMENTS

CONTRACTOR RESOURCES

OTHER LINKS

283100 Fire Detection and Alarm System	W	September 14, 2017	16720 16720AA
283102 Fire Detection and Alarm System (Hospital Projects)	W	September 2013	16720-H

© 2018 Regents of the University of Michigan
Design by Michigan Creative
326 East Hoover, Ann Arbor, MI 48109-1002
Phone: (734) 763-3020
Contact Us

UNIVERSITY OF MICHIGAN
ARCHITECTURE, ENGINEERING AND CONSTRUCTION

ARCHITECTURE & ENGINEERING
326 East Hoover, Mail Stop B
Ann Arbor, MI 48109-1002
Phone: 734-764-3414
Fax: 734-936-3334

BuildingName
The Description of the Project
P00000000 0000

SPECIFICATION DIVISION 26

NUMBER SECTION DESCRIPTION

DIVISION 26 ELECTRICAL
SECTION 260500 - COMMON WORK RESULTS FOR ELECTRICAL

END OF CONTENTS TABLE

DIVISION 26 ELECTRICAL
SECTION 260500 - COMMON WORK RESULTS FOR ELECTRICAL

PART 1 - GENERAL

1.1 RELATED DOCUMENTS

INCLUDE PARAGRAPH 1.1.A AND B IN EVERY SPECIFICATION SECTION. EDIT RELATED SECTIONS 1.1.B TO MAKE IT PROJECT SPECIFIC.

A. Drawings and general provisions of the Contract, Standard General and Supplementary General Conditions, Division 01 Specification Sections, and other applicable Specification Sections, in particular the Related Sections listed below, apply to this Section.

IN 1 BELOW, SELECT PROPER COMMISSIONING SPEC SECTION NUMBER APPLICABLE TO THE PROJECT.

B. Related Sections:

1. Section 019100/019110 - Commissioning
2. Section 017823 - Operation and Maintenance Manual
3. Section 260513 - Medium, Low & Control Voltage Cables
4. Section 260526 - Grounding and Bonding for Electrical
5. Section 260533 - Electrical Materials and Methods

1.2 SUMMARY

A. Provide all equipment, materials, labor and services necessary to furnish, install, test and turn over to the Owner the following electrical work as required by these specifications and as shown on the drawings, including all shop drawings, test reports, record drawings, operations and maintenance manuals, Owner training and incidental items necessary to complete the project in every respect.

B. Participate in project coordination, scheduling and commissioning activities as specified in Division 01.

1.3 REFERENCES

A. Provide equipment and materials that conform to the applicable standards of the following organizations:

1. American National Standards Institute (ANSI).
2. Institute of Electrical and Electronic Engineers (IEEE).
3. National Electrical Manufacturers Association (NEMA).
4. National Fire Protection Association (NFPA).
5. Telecommunications Industry Organization/Electronic Industries Alliance (TIA/EIA)

B. All materials and equipment shall be listed and labeled by Underwriters Laboratories (UL), Electrical Testing Laboratories (ETL), MET Laboratories (MET), or the Canadian Standards Association (CSA).

C. Install equipment and materials in compliance with the following:

1. Michigan Electrical Code (MEC).
2. Michigan Building Code (MBC).
3. Michigan Mechanical Code (MMC).
4. Michigan Plumbing Code (MPC).
5. Americans with Disabilities Act (ADA).
6. State of Michigan DLEG Bureau of Fire Services.
7. Owner's Inspection Authorities.
8. Manufacturers' instructions.

1.4 DESIGN DOCUMENTS

A. Contact the Owner's Representative about design questions and discrepancies between design documents before performing the work.

B. Notify the Owner's Representative if existing code violations are uncovered that are not addressed in the design documents.

1.5 SUBMITTALS

A. Submit for approval copies of shop drawings and product literature for the following equipment. Submittals shall include adequate information to prove that the systems, equipment and materials comply with the contract documents. Each copy of the submittals shall be marked to indicate the specific models, sizes, types and options being provided. Submittals not so marked will be rejected.

DELETE ITEMS NOT PART OF THE PROJECT. ADD ITEMS AS NECESSARY.

1. Primary Equipment and Unit Substations.
2. Generator and Uninterruptible Power Supply Systems.
3. Distribution Transformers.
4. Power Distribution, Lighting, and Receptacle Panels.
5. Motor Control Centers, Starters and Motor Controls.
6. Disconnect and Safety Switches.
7. Lighting Contactors.
8. Capacitors.
9. Bus Ducts and Bus Duct Plugs.
10. Wiring Devices.
11. Transient Voltage Surge Suppresser Devices.
12. Lighting Fixtures.
13. Lighting Control Systems, Dimmer Systems and Switches.
14. Timers and Time Switches.
15. Fire Alarm Systems.
16. Clocks and Clock Systems.
17. Security and Card Access Control Systems.
18. Sound Reinforcement Systems.
19. Intercom and Public Address Systems.
20. Closed Circuit TV Systems.
21. Manholes and Duct Bank Spacers.
22. Cable Trays.
23. Conduits and Fittings.
24. Cables, Wires and Terminations.
25. Grounding Connections.

B. Participate in the coordination drawing process and submit coordination drawings for approval in accordance with Division 01.

1.6 RECORD DOCUMENTS

A. Submit record drawings in electronic format (AutoCAD or Microstation) for approval as specified in Division 01. Show the locations of equipment, light fixtures, switches, receptacles and junction boxes, riser information, the sizes of conduits and conductors, circuit numbers, and deviations from the design. Dimension the locations of buried, embedded and concealed primary and feeder conduits from permanent building features.

1.7 OPERATIONS AND MAINTENANCE MANUALS

A. Submit for approval copies of operations and maintenance manuals as specified in Division 01 and the other Division 26, 27 and 28 sections. Each copy of the manuals shall be marked to indicate the specific models, sizes, types and options of the systems and equipment that were provided. Manuals not so marked will be rejected.

1.8 QUALITY ASSURANCE

A. Electrical work shall be performed by licensed Journeyman or registered Apprentice Electricians. The number of Apprentices on a project shall not exceed the number of Journeymen. Electricians shall carry a copy of their license or registration while working on The Owner’s projects.

B. Contact the Owner’s Code Inspection Department (734-764-2457) before starting the project to arrange for periodic inspections. Normal inspections will be performed at no cost to the Contractor, but the costs for repeat re-inspections of rejected work may be deducted from the Contractor’s final payment.

1.9 SHIPPING, HANDLING AND STORAGE

A. For deliveries of equipment to the Owner, notify the Owner’s Representative of the deliveries 3 working days in advance. Deliveries shall occur on normal workdays between 8:00 AM and 2:00 PM. Deliveries that arrive without adequate notice may be rejected.

B. Provide unloading and storage for Owner furnished equipment that is shipped to the project site.

C. Pick up, transport and unload at the project site Owner furnished equipment that is stored in the Owner’s warehouses.

D. Provide packaging Waste management in accordance with Division 1.

1.10 WARRANTY

A. Guarantee work for a period of one year from the date of the Owner's final acceptance of the project (Substantial Completion). A manufacturer’s warranty beginning upon equipment receipt or startup shall be extended to one year from final project acceptance. A manufacturer’s warranty in excess of one year shall remain in effect for its entire time period.

PART 2 - PRODUCTS (NOT APPLICABLE)

PART 3 - EXECUTION

3.1 SUBSTITUTIONS

A. Provide equipment and materials from the manufacturers specified. Substitutions for specified products are acceptable only if proposed and approved in writing at the time of bid.

3.2 TEMPORARY SERVICE

DELETE NEXT SENTENCE IF THE PROJECT IS PAYING FOR THE ELECTRICITY. DELETE PARAGRAPH 1 BELOW IF THE UNIVERSITY IS PAYING FOR THE ELECTRICITY)

A. Provide, maintain and remove all temporary lighting and power required to complete the project. If used reasonably, the Owner will pay for the electricity consumed.

1. Provide an Owner approved watthour meter and box. Coordinate with the Plant High Voltage Shop (734 764-9445) and submit a Utilities Services Request for circuit energization.

B. Provide ground fault protection on temporary feeders rated 200 amps and larger.

C. Temporary feeders shall be limited to the following types:

1. Conductors installed in raceways.
2. NEC Type MC cable.
3. Multi-conductor cable with an overall outer jacket (where inaccessible to the public and not subject to damage or abuse).
4. NEC recognized hard usage cord or extra hard usage cord (where inaccessible to the public and not subject to damage or abuse).

D. Install and support temporary wiring in accordance with the NEC requirements for permanent wiring.

E. Label temporary power feeders every 25 feet maximum.

F. Temporary wiring may either be copper or aluminum.

3.3 ELECTRICAL COORDINATION

A. Participate in the project scheduling and coordination drawing activities specified in Division 01 of the project specifications.

B. Coordinate power interruptions with the other disciplines in accordance with Division 01. Notify the Owner's Representative of power interruptions 3 working days in advance. Maintain power to all loads outside of the work area.

C. Coordinate with the Plant Operations Call Center 10 working days in advance at (734) 647-2059:

1. Before performing any work affecting primary power distribution circuits, unit substations or outdoor lighting.

2. Before performing any work affecting engine-generators, automatic transfer switches or variable speed drives.
3. Before performing any work affecting fire alarm, security or card access control systems.
4. Before performing any work affecting telecommunications ducts, manholes, rooms or circuits.
5. Before performing any work affecting roofs.

D. Notify OSEH at (734) 647-1143 before starting up engine-generators.

3.4 DEMOLITION

A. Protect adjacent building services and materials indicated to remain. Install and maintain barriers to keep dirt, dust and noise from being transmitted to adjacent areas. Remove protection and barriers after demolition is completed.

B. Remove all equipment and materials designated for demolition as follows:

1. Power wiring - remove back to the source or to the first junction box where the circuit continues on to remaining loads.
2. Telecommunications wiring - remove from conduits and J-hooks back to cable trays or to the outer walls of the building entrance (BE) room or telecommunications rooms (TRs).
   a. Cut and label wire ends "Abandoned" when abandoning sections of wires in cable trays and at BE and TR outer walls. Do not remove telecommunications wiring from cable trays, the BE or the TRs.
   b. Coordinate for the Telecommunications Installation Contractor to remove abandoned wiring from cable trays and inside the BE and TRs.
3. Conduits and boxes in walls and above permanent ceilings - abandon in place. Install blank cover plates on boxes.
4. Conduits through floors and walls, and boxes in floors - remove completely. Patch and paint penetrations to match existing.
5. Exposed and accessible conduits, wireways and boxes - remove completely. Patch and paint surfaces to match existing, and plug unused panel and junction box holes.
6. Lighting fixtures and electrical equipment - remove and dispose of completely (unless designated for relocation).

3.5 LAMP AND BALLAST RECYCLING

A. Recycle tubular fluorescent, compact fluorescent, HID, LED, induction and cold cathode lamps removed during demolition or replaced during construction. These six types of lamps shall not be disposed of as solid waste.

1. Package unbroken tubular fluorescent lamps in their original cardboard boxes, or contact OSEH Hazardous Materials Management at (734) 647-1142 and arrange to pick up U-lamp, 60 lamp, 100 lamp or 250 lamp boxes at the North Campus Transfer Facility located at 1655 Dean Road. Package unbroken compact fluorescent, HID, LED, induction and cold cathode lamps in appropriately sized corrugated cardboard boxes.
    a. Use separate boxes for each type and physical size of lamp. Do not mix lamp types or sizes in the same box.
    b. Fill the boxes as completely as possible.
2. Obtain Universal Waste Labels from OSEH. Fill out and attach one label to each box.
    a. Enter the building name, quantity of lamps, and the accumulation start date (date the box started to be filled).
    b. Mark the appropriate check box to indicate the type and length of lamps.
3. Tape the boxes closed on all sides.
4. Sweep up any broken lamps and seal them in a heavy plastic bag. Place the plastic bag in a corrugated cardboard box and tape the box closed on all sides. Label the box to indicate the type and quantity of broken lamps inside. Notify OSEH of the broken lamps.
5. Contact the OSEH Hazardous Materials Management at (734) 763-4568 and arrange to deliver the sealed and labeled boxes to the storage area at the Campus Safety Services Building located at 1239 Kipke Drive. Take care to avoid breaking the lamps. Position the boxes on their sides during transport. Do not stack anything on top of the boxes.
6. If lamps inside a box become broken, seal the entire box in a heavy plastic bag. Copy the Universal Waste Label information onto a new label and attach the new label to the outside of the plastic bag.
7. Place the boxes into the designated storage area. Position the boxes on their sides so that the labels are forward and visible. Do not stack the boxes more than three high (two high for 250 lamp boxes). OSEH will recycle the lamps at no cost to the Contractor.

B. Recycle fluorescent, HID and cold cathode lighting ballasts removed during demolition. Recycle LED and induction lighting drivers removed during demolition. Lighting ballasts and drivers shall not be disposed of as solid waste.

1. Contact OSEH Hazardous Materials Management at (734) 763-4568 and arrange to pick up DOT approved 30 gallon steel drums and 5 gallon pails at the North Campus Transfer Facility located at 1655 Dean Road.
2. Place the drums in an accessible location and on a hard surface so that OSEH can use a drum cart to pick them up later. Lawns, dirt piles, gravel drives, muddy areas and basements without elevators are not considered accessible locations.
3. Wearing rubber gloves, deposit any leaking ballasts into the 5 gallon pails for separate handling. When finished, deposit the rubber gloves into the 5 gallon pails.

4. Deposit the non-leaking ballasts and drivers into the 30 gallon drums. Leave enough space at the top of the drums for installation of lids.
5. Obtain Universal Waste Labels from OSEH. Fill out and attach one label to each 5 gallon pail and each 30 gallon drum. Enter the building name, quantity of ballasts and drivers, and the accumulation start date (date the pail or drum started to be filled).
6. Contact OSEH at least 3 working days in advance to request pick-up of the pails and drums. OSEH will pick up and recycle the ballasts and drivers at no cost to the Contractor.
7. Do not deposit ballasts from other projects or any other refuse in the drums. All costs for disposing of foreign items found in the drums will be deducted from the Contractor's final payment.

3.6 RELOCATION

A. Carefully remove, clean and restore items designated for relocation to a "like new" condition, and store them for reuse.

3.7 SALVAGE

A. Equipment and materials removed during demolition, unless noted otherwise, shall become the property of the contractor with due consideration for all such removed equipment included in the bid price.

3.8 CLEANUP

A. Remove and legally dispose of demolished items, rubbish and debris from the construction site daily, and at the completion of the work. Failure to do so may result in the cleanup being performed by others and all costs thereof being deducted from the Contractor's final payment.

3.9 EQUIPMENT PROTECTION

A. Protect equipment and materials during shipment, storage and construction against damage and contamination.

B. Items that become damaged or contaminated shall be restored to a "like new" condition or replaced at the Contractor's expense.

3.10 WORK PERFORMANCE

A. Locate equipment as close as practical to the locations shown on the drawings. Should field conditions prevent the installation of equipment or materials as indicated on the drawings, make any deviations only with the prior approval of the Owner's Representative.

B. Install and connect new work to existing work neatly and carefully. Existing work that is disturbed shall be repaired or replaced as necessary to restore it to its prior condition.

C. Coordinate work with the other trades to ensure completion consistent with the project schedule. Do not unduly delay the startup, testing or turnover of project systems.

D. Coordinate work with the other trades to ensure the NEC-required dedicated spaces above and working spaces around electrical equipment is provided, and to ensure access to equipment requiring calibration or maintenance. Working space and access shall be sufficient for an adult to perform maintenance safely without straddling or removing obstructions. Work that encroaches on working space or that impedes maintenance shall be relocated at the Contractor's expense.

E. Coordinate work with the other trades to provide access doors to maintainable electrical equipment (including lighting fixture remote ballasts) located behind walls or above permanent ceilings.

F. Prior to core drilling concrete floors, test for the presence of electrical conduits. Use an impulse induction type scanner capable of detecting both metallic conduits and copper wires in PVC conduits. Tracers that scan for energized cables or that scan for injected high frequency signals are not acceptable. Notify the Owner’s Inspection Department prior to all tests. Prior to core drilling, arrange for the Owner’s Representative to notify building occupants of the potential for an unscheduled power outage. Conduits damaged during core drilling shall be restored immediately at the Contractor’s expense.

3.11 EQUIPMENT AND WIRING IDENTIFICATION AND COLOR CODING

A. Provide nameplates indicating equipment names or numbers and power sources as specified in Section 260533.

B. Paint fire alarm system and temperature controls system junction boxes and covers as specified in Section 260533.

C. Mark junction box covers with the panel and breaker numbers of the circuits contained within as specified in Section 260533.

D. Provide Arc-Flash labels at all substations, switchboards, panelboards, motor control devices, and other power equipment as specified in Section 260533.

E. Color code and identify wiring in accordance with Section 260513.

3.12 FIELD QUALITY CONTROL

A. Arrange for testing and commissioning of electrical systems, equipment and materials prior to final acceptance of the work. Acceptance tests and commissioning shall be performed as specified in Division 01 and the other Division 26, 27 and 28 sections, and in applicable codes, standards and manufacturers’ instructions.

B. Provide all test equipment, materials and labor necessary to perform the tests, and coordinate with the other trades for necessary services, such as scaffolding and the uncoupling of motors.

C. Notify the Owner’s Representative 3 working days in advance of tests. The Owner shall witness the tests unless the Owner’s Representative waives such witnessing in writing.

D. Notify manufacturers sufficiently in advance of tests for which the manufacturers should be present.

E. Replace any equipment or materials found to be defective or found to be of lesser quality than that specified or shown on the drawings.

F. Provide written test reports, signed and dated, for all tests prior to acceptance of the electrical equipment by the Owner.

G. Provide the training specified in each specification section.

END OF SECTION 260500

UNIVERSITY OF MICHIGAN
ARCHITECTURE, ENGINEERING AND CONSTRUCTION

ARCHITECTURE & ENGINEERING
326 East Hoover, Mail Stop B
Ann Arbor, MI 48109-1002
Phone: 734-764-3414
Fax: 734-936-3334

BuildingName
The Description of the Project
P00000000 0000

SPECIFICATION DIVISION 26

NUMBER SECTION DESCRIPTION

DIVISION 26 ELECTRICAL
SECTION 260513 - MEDIUM, LOW AND CONTROL VOLTAGE CABLES

END OF CONTENTS TABLE

DIVISION 26 ELECTRICAL
SECTION 260513 - MEDIUM, LOW AND CONTROL VOLTAGE CABLES

PART 1 - GENERAL

1.1 RELATED DOCUMENTS

INCLUDE PARAGRAPH 1.1.A AND B IN EVERY SPECIFICATION SECTION. EDIT RELATED SECTIONS 1.1.B TO MAKE IT PROJECT SPECIFIC.

A. Drawings and general provisions of the Contract, Standard General and Supplementary General Conditions, Division 01 Specification Sections, and other applicable Specification Sections, in particular the Related Sections listed below, apply to this Section.

VERIFY ALL RATINGS, DIMENSIONS AND REQUIREMENTS SPECIFIED TO BE AS SHOWN ON THE DRAWINGS ARE CLEARLY SHOWN ON THE DRAWINGS.

IN 2 BELOW, SELECT PROPER COMMISSIONING SPEC SECTION NUMBER APPLICABLE TO THE PROJECT.

B. Related Sections:

1. Section 017823 - Operation and Maintenance Manual
2. Section 019100/019110 - Commissioning
3. Section 260526 - Grounding and Bonding for Electrical
4. Section 260533 - Electrical Materials and Methods
5. Section 260800 - Electrical Acceptance Tests

1.2 SUMMARY

EDIT THE SUMMARY TO MAKE IT PROJECT SPECIFIC.

A. Furnish, install, terminate, splice (where permitted), test and label electrical cables and wires as shown.

1. Unless shown otherwise on the drawings, medium voltage cables, splices, terminations and labels will be provided by the U-M Plant High Voltage Shop.
2. Unless shown otherwise on the drawings, telecommunications voice and data cables, terminations and labels will be provided by others.

1.3 REFERENCES

A. Cables shall comply with the latest versions of the following codes and standards as applicable.

1. ANSI/NEMA WC 74/ICEA S-93-639, "5-46 kV Shielded Power Cable for Use in Transmission and Distribution of Electric Energy".
2. ANSI/NEMA WC 70/ICEA S-95-658, "Power Cables Rated 2000 Volts or Less for the Distribution of Electrical Energy".
3. Michigan Electrical Code (MEC) which invokes NFPA 72, the National Electrical Code (NEC).

1.4 SUBMITTALS

A. Medium Voltage Cables, Terminations, Splices and Labels: Submit for approval product literature identifying the following:

1. Manufacturers' names, catalog numbers and illustrations.
2. Weights and overall diameters.
3. Conductor AWG sizes, materials, dimensions and stranding.
4. Insulation NEC Type letters, materials, thicknesses, voltage ratings, temperature ratings, dry or wet location ratings and percent insulation levels.
5. Shield types, materials, thicknesses and percent coverage.
6. Jacket materials and thicknesses.
7. Surface markings including special ratings, characteristics, approved uses and NRTL listings.
8. Maximum allowable pulling tensions and side wall pressures.
9. Minimum pulling and training bend radii.
10. Lubrication requirements and lubricant compatibilities.
11. Cold weather pulling limitations.
12. Cable reel dimensions and weights.

B. Cables 600 Volts and Below: Submit for approval product literature identifying the following (as applicable to each cable type):

1. Manufacturers' names and catalog numbers.
2. Conductor AWG sizes, materials, dimensions and stranding.
3. Insulation NEC type letters, materials, voltage ratings, temperature ratings and dry or wet location ratings.
4. Shield types, materials, thicknesses and percent coverage.
5. Jacket materials and colors.
6. Metallic sheath types and materials.
7. Surface markings indicating special characteristics, special ratings, approved uses and UL listings.
8. Crimp-type terminals for aluminum feeder cables (if permitted).

C. Test Reports:

1. Factory quality control test reports (medium voltage cables only).
2. Written test reports, signed and dated, for specified field tests prior to acceptance of the cables by the Owner.

1.5 QUALITY ASSURANCE

A. Manufacturers and Products: The products and manufacturers specified in this Section establish the standard of quality for the Work. Subject to compliance with all requirements, provide specified products from the manufacturers named in Part 2.

B. Reference Standards: Products in this section shall be built, tested, and installed in compliance with the specified quality assurance standards, latest editions, unless noted otherwise.

1. Cables: Applicable ANSI, ICEA, IEEE and NEMA standards.
2. Cables, Terminations, Splices and Accessories: Listed, labeled and marked for intended use by Underwriters Laboratories (UL), Electrical Testing Laboratories (ETL), MET Laboratories (MET), or the Canadian Standards Association (CSA).

1.6 DELIVERY, STORAGE, AND HANDLING

A. Shipping and Handling Requirements: Store materials raised off the floor on pallets and protected with coverings to prevent damage due to weather and construction activities. Store in areas that prevent damage due to freezing and extreme temperatures or sunlight. Seal cable ends from absorption of water. Protect materials from damage, dirt and debris at all times.

1.7 WARRANTY

A. Provide a complete warranty for materials and labor for a minimum of one year from the date of Substantial Completion. A manufacturer's warranty in excess of one year shall remain in effect for its entire time period.

PART 2 - PRODUCTS

2.1 CABLE (MEDIUM VOLTAGE)

A. Medium voltage cable shall be single conductor stranded copper, with ethylene propylene rubber (EPR) insulation rated 15kV, 105 degrees C, 133 percent insulation level, a 5-mil thick minimum tape shield with 12-1/2 percent minimum overlap, and a polyvinyl chloride (PVC) jacket approved for use in cable trays. The cable shall be suitable for use on a 13.2 kV, 3-phase, 3-wire, ungrounded, system. General Cable, Kerite, Okonite, or Prysmian.

2.2 CABLE (600 VOLTS AND BELOW)

A. Secondary distribution and power cables for indoor use and for above ground outdoor use shall be single conductor stranded copper, No. 12 AWG minimum, with NEC Type THHN insulation rated 90 degrees C in dry and damp locations, 600 volts, color coded as specified. Aetna Wire and Cable, Alan Wire, American Insulated Wire, Cerro Wire, Encore, General Cable, Republic Wire, Rockbestos-Surprenant, Service Wire, Southwire or United Copper Industries.

IF ALUMINUM FEEDER CABLES ARE PERMITTED, PROVIDE AN ALUMINUM CABLE AND CONDUIT SIZING CHART. PROVIDE U-M STANDARD DETAIL 26051301. IDENTIFY CIRCUITS WHERE ALUMINUM FEEDER CABLES ARE PROHIBITED BY THE EQUIPMENT MANUFACTURERS, SUCH AS FOR CHILLER AND ELEVATOR FEEDERS.

Where the drawings permit, indoor secondary feeder cables only may be single conductor stranded, Type AA-8000 Series aluminum, No. 1 AWG minimum, with NEC Types THHN or XHHW-2 insulation rated 90 degrees C, 600 volts, color coded as specified. Aetna Wire and Cable, Alan Wire, American Insulated Wire, Cerro Wire, Encore, General Cable, Republic Wire, Rockbestos-Surprenant, Service Wire, or Southwire. Terminations shall be Burndy or Thomas & Betts.

1. Aluminum cables may be used for indoor feeder circuits only, not for branch circuits or outdoor circuits.
2. Size conduits and device enclosure wiring gutters for the larger diameters and bend radii of aluminum cables.

3. Pre-train Electricians in aluminum cable preparation and termination.
4. Terminate cables using crimp-type terminals in accordance with U-M Standard Detail 26051301. The die and crimp numbers shall be clearly visible after the lugs are crimped. Burndy or Thomas & Betts.
5. Identify where aluminum conductor cables were installed on the project as-built drawings.

B. Lighting cable for indoor use and for above ground outdoor use shall be single conductor stranded copper, No. 12 AWG minimum, with NEC Type THHN insulation rated 90 degrees C in dry and damp locations, 600 volts, color coded as specified. Aetna Wire and Cable, Alan Wire, American Insulated Wire, Cerro Wire, Encore, General Cable, Republic Wire, Rockbestos-Surprenant, Service Wire, Southwire or United Copper Industries.

C. Secondary distribution, power and lighting cable for underground use in conduit shall be single conductor stranded copper, No. 12 AWG minimum, with NEC Type XHHW insulation rated 90 degrees C in dry locations and 75 degrees C in wet locations, 600 volts, color coded as specified. Aetna Wire and Cable, Alan Wire, American Insulated Wire, Cerro Wire, Encore, General Cable, Republic Wire, Rockbestos-Surprenant, Service Wire, Southwire or United Copper Industries.

D. Control cable shall be single conductor stranded copper No. 14 AWG minimum, with NEC Type THHN insulation rated 90 degrees C in dry and damp locations, 600 volts, color coded as specified. Aetna Wire and Cable, Alan Wire, American Insulated Wire, Cerro Wire, Encore, General Cable, Republic Wire, Rockbestos-Surprenant, Service Wire, Southwire or United Copper Industries.

E. Instrumentation, telecommunications, fire alarm, security, card access control, audio/visual and other special systems wire shall be in accordance with system manufacturer’s recommendations, but shall not be less than 20 AWG. Conductors shall be stranded copper unless manufacturer’s instructions require the use of solid conductor. Conductors or jackets shall be color coded as specified.

F. Manufactured wiring systems shall consist of multiple solid or stranded copper conductors as specified above, an insulated grounding conductor, a corrugated aluminum or galvanized steel jacket, and locking-type connectors from the same manufacturer and product line as the mating fixture connectors. Conductors shall be color coded as specified.

G. Type MC cable for power and lighting use shall consist of multiple stranded copper conductors as specified above, an insulated grounding conductor and a corrugated aluminum or galvanized steel jacket. Conductors shall be color coded as specified. AFC, Encore, Kaf-Tech, Rockbestos-Surprenant, Service Wire, Southwire or United Copper Industries.

H. Type MC cable for fire alarm system use shall consist of multiple solid or stranded copper conductors sized in accordance with the fire alarm system manufacturer's instructions, with NEC Type THHN insulation rated 90 degrees C in dry and damp locations, 600 volts, an insulated grounding conductor and a corrugated aluminum or galvanized steel jacket. Cable shall be plenum rated. Conductors and jacket shall be color coded as specified. AFC, Encore, Kaf-Tech, Rockbestos-Surprenant, Service Wire, Southwire or United Copper Industries.

I. Type MI mineral-insulated cable shall be nickel-clad copper conductor, magnesium oxide insulated and copper alloy sheathed, rated 600 volts, with either factory installed terminations or field termination kits from the same manufacturer as the cable. Cable shall be UL labeled as 2 hour fire rated. Pentair Pyrotenax only.

J. Grounding electrode conductors and equipment grounding conductors shall be single conductor stranded copper, No. 12 AWG minimum, bare where shown or with NEC Type THHN insulation rated 90 degrees C in dry and damp locations, 600 volts, color coded as specified.

PART 3 - EXECUTION

3.1 INSTALLATION REQUIREMENTS

A. Install cables and wires in raceways, except low voltage control, instrumentation, telecommunications, fire alarm, security, audio/visual and other power limited circuit wiring may be installed in J-hooks where shown on the drawings.

B. Use cable lubricant when pulling medium voltage cables and secondary feeder cables. Avoid exceeding manufacturer's recommendations on pulling tensions, sidewall pressures and cable bend radii.

C. Route cables in J-hooks, manufactured wiring systems and Type MC cable parallel to or perpendicular to building lines, and in a neat and workmanlike manner. Coil the excess and support independently of the ceiling grid system.

D. Terminate Type MC cable with steel set screw connectors that have integral insulating bushings. Self-locking, twist-in type connectors are not acceptable.

E. Install Type MI and other 2-hour fire rated cable in strict accordance with manufacturer's instructions on pulling, bending, raceways, additional supports, protection from moisture, and installation of field termination kits.

F. Segregate wiring of different voltage levels. Except as follows, circuits operating at different voltages shall not share raceways.

1. Power wiring to rooftop motors and rooftop receptacles may be routed together.
2. Power and control wiring between variable speed drives and motor disconnect switches may be routed together.
3. Class 1 power limited cables may share the same cable tray.

G. Splice power cables with solderless compression butt splices or ring lugs. Terminate power cables including motor leads with solderless compression ring lugs. Splice branch circuit wiring, lighting wiring, and control and instrumentation wiring with wire nut connectors. Terminate control and instrumentation wiring with solderless compression ring or spade lugs. Compression splices and lugs shall be crimped with tools specifically designed for the terminations being crimped. Compression splices and lugs used with aluminum feeder cables shall be identified as accepting aluminum cables.

H. If no color coding system exists for each indicated system function and voltage, color code circuits as follows:

1. Three Phase Power Over 600 Volts:
   Phase X (A): Black
   Phase Y (B): Red
   Phase Z (C): Blue
2. Three Phase Power 480/277 Volts:
   Phase X (A): Brown
   Phase Y (B): Orange
   Phase Z (C): Yellow
   Neutral: Gray
   Ground: Green
3. Three Phase Power 208/120 Volts:
   Phase X (A): Black
   Phase Y (B): Red
   Phase Z (C): Blue
   Neutral: White
   Ground: Green
4. Single Phase Power 240/120 Volts:
   Phase X (A): Black
   Phase Y (B): Red
   Neutral: White
   Ground: Green
5. Fire Alarm Wiring:
   Addressable Initiating Device: #18 Shielded Twisted Pair (STP) Red with Black Stripe.
   Horn, Horn/Strobe or Controlled Output Positive (+) 24 VDC: #14 Stranded Red.
   Horn, Horn/Strobe or Controlled Output Negative (-) 24 VDC: #14 Stranded Black.
   Horn, Horn/Strobe or Controlled Output MC Cable Jacket (if MC cable is used): Red.
   Speakers: #18 STP Red.
   Clear Strobe Light Positive (+): #14 Stranded Yellow.
   Clear Strobe Light Negative (-): #14 Stranded Blue.
   Clear Strobe Light MC Cable Jacket (if MC cable is used): Red with Blue Stripe.
   Amber Strobe Light Positive (+): #14 Stranded Yellow with Black Stripe.
   Amber Strobe Light Negative (-): #14 Stranded Blue with Black Stripe.
   Amber Strobe Light MC Cable Jacket (if MC cable is used): Red with Yellow Stripe.
   NOTE: When clear and amber strobe lights are addressable and require only one pair of wires, color code the wires

and MC cable jacket as specified for the clear strobe light.
Panel Communications: #18 STP Red with Black Stripe.
Fireman's Telephone: #18 STP Red with Yellow Stripe.

6. Synchronized Clock Wiring:
   Line: Black
   Neutral: White
   Clock Correction: Red
7. Control wires to light fixtures for light dimming shall be:
   Hot control wire: Black with white stripe
   Neutral control wire: White with Black stripe
8. Less Than 120 Volts: Use Industry Standard Methods

I. For University Hospital projects, color code circuits as follows:

1. Three Phase Power Over 600 Volts:
   Phase X (A): Black
   Phase Y (B): Red
   Phase Z (C): Blue
2. Three Phase Power 480/277 Volts:
   Phase X (A): Red
   Phase Y (B): Blue
   Phase Z (C): Black
   Neutral: Gray
   Ground: Green
3. Three Phase Power 208/120 Volts:
   Phase X (A): Yellow
   Phase Y (B): Orange
   Phase Z (C): Brown
   Neutral: White
   Ground: Green
4. Control wires to light fixtures for light dimming shall be:
   Hot control wire: Black with White Stripe
   Neutral control wire: White with Black Stripe
5. Less Than 120 Volts: Use Industry Standard Methods

J. Provide home runs of No. 10 AWG wire for 20 amp branch circuits that exceed 150' in length.

K. Ground the shields of shielded instrumentation and control cables at one end only. The shields at the other end shall be insulated from ground.

L. Provide identification tags on all cables and conductors terminated in panels.

3.2 FIELD QUALITY CONTROL

A. Prior to any testing, perform visual inspections to verify the following:

1. Conductor and jacket color coding is correct.
2. Labeling is correct.
3. Electrical terminations have been properly tightened.
4. The cables are ready to be tested.

B. Perform a continuity test, 2,500-volt DC Megger test, a DC high potential test, and a second 2,500-volt DC Megger test on medium voltage cables. The high potential test shall be performed at 45kV for new cable and at 30kV when new cable has been spliced to existing cable. Submit a test report.

C. Perform a continuity check and a 1,000 volt DC Megger test on 600 volt power cables No. 4 AWG and larger.

1. The Megger test shall be performed between each pair of conductors and from each conductor to ground.
2. The Megger test shall be performed for 15 seconds or until the insulation resistance value stabilizes.
3. The insulation resistance between conductors and from each conductor to ground shall be 100 megohms minimum in one minute or less. In addition, the lowest insulation resistance value shall not differ from the highest resistance value by more than 20 percent. But if the lowest value is above 1,000 megohms, the 20% balance requirement may be waived.

D. Perform a continuity check on control and instrumentation wiring.

3.3 COMMISSIONING

A. Perform commissioning activities in accordance with Related Sections.

END OF SECTION 260513

UNIVERSITY OF MICHIGAN
ARCHITECTURE, ENGINEERING AND CONSTRUCTION

ARCHITECTURE & ENGINEERING
326 East Hoover, Mail Stop B
Ann Arbor, MI 48109-1002
Phone: 734-764-3414
Fax: 734-936-3334

BuildingName
The Description of the Project
P00000000 0000

SPECIFICATION DIVISION 26

NUMBER SECTION DESCRIPTION

DIVISION 26 ELECTRICAL
SECTION 260526 – GROUNDING AND BONDING FOR ELECTRICAL

END OF CONTENTS TABLE

DIVISION 26 ELECTRICAL
SECTION 260526 – GROUNDING AND BONDING FOR ELECTRICAL

PART 1 - GENERAL

1.1 RELATED DOCUMENTS

INCLUDE PARAGRAPH 1.1.A AND B IN EVERY SPECIFICATION SECTION. EDIT RELATED SECTIONS 1.1.B TO MAKE IT PROJECT SPECIFIC.

A. Drawings and general provisions of the Contract, Standard General and Supplementary General Conditions, Division 1 Specification Sections, and other applicable Specification Sections including the Related Sections listed below, apply to this Section.

IN 1 AND 2 BELOW, DELETE SUSTAINABLE DESIGN IF NOT APPLICABLE TO THE PROJECT. SELECT PROPER COMMISSIONING SPEC SECTION NUMBER APPLICABLE TO THE PROJECT.

B. Related Sections:

1. Section 018113 - Sustainable Design Requirements
2. Section 019100/019110 - Commissioning
3. Section 017823 - Operation and Maintenance Manual
4. Section 260513 - Medium, Low & Control Voltage Cables
5. Section 260533 - Electrical Materials and Methods
6. Section 260800 - Electrical Acceptance Tests

1.2 SUMMARY

A. Provide grounding for all systems and equipment.

1.3 GROUNDING SYSTEM REQUIREMENTS

A. Each ground rod shall have a maximum resistance to ground of 10 ohms before connection to the other ground rods. If reading is above 10-ohms, drive one extension. Further testing of that individual rod is not needed

FILL IN THE APPROPRIATE RESISTANCE VALUE BELOW. SPECIFY 2 OHMS FOR PRIMARY SERVICES OR 5 OHMS FOR SECONDARY SERVICES.

B. The total grounding system with all connections completed shall have a maximum resistance to ground of _____ ohms.

1.4 CONNECTION REQUIREMENTS

A. Provide exothermic weld type, or Burndy Hyground, ground connections for concealed, underground, and concrete encased ground connections, for ground connections to structural steel, connections between sections of the main ground bus and all connections to the substation room ground bus bars.

B. Exposed ground connections (except connections to structural steel and substation room ground bus bars) may be made with copper or bronze compression ground fittings or bolted compression ring lugs.

C. Provide exothermic weld type, or Burndy Hyground ground connections for splices and taps of grounding conductors No. 8 AWG and larger. Exposed splices and taps shall be taped.

PART 2 - PRODUCTS

2.1 GROUND RODS

A. Unless shown otherwise, ground rods shall be 3/4" diameter by 10' long, copper clad steel. Ground rods shall be capable of being extended when additional length is required.

2.2 GROUNDING CONDUCTORS

A. Grounding conductors for direct burial underground, for encasement in concrete, and for grounding of unit substations shall be No. 4/0 AWG minimum, bare, stranded copper.

B. Grounding conductors for general use shall be stranded, copper conductor, sized in accordance with the NEC unless shown otherwise on the drawings, and insulated with green NEC Type THHN insulation rated 90 degrees C, 600 volts.

2.3 GROUND CONNECTIONS

A. Ground connections shall be Burndy Hyground, Cadweld, Thermo-weld or Thomas & Betts Blackburn only.

PART 3 - EXECUTION

3.1 INSTALLATION REQUIREMENTS

A. Ground duct banks and manholes in accordance with Specification Section 260543.

B. Ground the shields of medium voltage primary cables in accordance with Specification Section 261000, and the shields of shielded instrumentation and control cable in accordance with Specification Section 260513.

C. Provide bare copper grounding conductors from duct banks, manholes, unit substations, primary switches, transformers, switchgear, panelboards, motor control centers and control panels to the building grounding system. Equipment rated above 480 volts or 600 amps shall be grounded by a minimum of two independent grounding conductors.

D. Bond transformer, UPS system, central battery/inverter system, emergency generator, and separately derived electrical system neutrals to the building grounding system.

E. Ground motors rated 460 volts and below by motor feeder equipment grounding conductors. Stranded copper grounding conductors connected to building steel shall also bond motors rated over 460 volts.

F. Provide green insulated equipment grounding conductors in all service, feeder, and branch circuits for connection of load devices to the power source ground. Raceways shall not be used as equipment grounding conductors.

1. Equipment grounding conductors shall not be daisy-chained.
2. Bond equipment-grounding conductors in boxes and enclosures where the grounding conductors are terminated or spliced.

G. Bond conduits, cable trays, wireways, surface raceways, boxes, and enclosures together, and to the building grounding system. Provide bonding bushings and bonding jumpers to bond conduits where they enter a box or enclosure.

H. Ground the lightning protection system with separate ground rods. The building grounding system ground rods shall not be used. After completion of both systems, the lightning protection system shall be bonded to the building grounding system.

I. Protect separately routed grounding conductors subject to damage or physical abuse by Schedule 40 PVC nonmetallic conduits. Grounding conductors shall not be routed in metallic conduits except when routed with phase conductors.

3.2 FIELD QUALITY CONTROL

A. Test the grounding in accordance with Specification Section 260800, and submit a test report.

B. When the total grounding system fails its test by having a higher resistance to ground than specified in Section 260800, contact the Project Electrical Engineer for corrective action.

3.3 COMMISSIONING

A. Perform commissioning activities in accordance with Related Sections.

END OF SECTION 260526

UNIVERSITY OF MICHIGAN
ARCHITECTURE, ENGINEERING AND CONSTRUCTION

ARCHITECTURE & ENGINEERING
326 East Hoover, Mail Stop B
Ann Arbor, MI 48109-1002
Phone: 734-764-3414
Fax: 734-936-3334

BuildingName
The Description of the Project
P00000000 0000

SPECIFICATION DIVISION 26

NUMBER SECTION DESCRIPTION

DIVISION 26 ELECTRICAL
SECTION 260533 - ELECTRICAL MATERIALS AND METHODS

END OF CONTENTS TABLE

DIVISION 26 ELECTRICAL
SECTION 260533 - ELECTRICAL MATERIALS AND METHODS

PART 1 - GENERAL

1.1 RELATED DOCUMENTS

INCLUDE PARAGRAPH 1.1.A AND B IN EVERY SPECIFICATION SECTION. EDIT RELATED SECTIONS 1.1.B TO MAKE IT PROJECT SPECIFIC.

A. Drawings and general provisions of the Contract, Standard General and Supplementary General Conditions, Division 01 Specification Sections, and other applicable Specification Sections, in particular the Related Sections listed below, apply to this Section.

B. Related Sections:

1. Section 260513 - Medium, Low & Control Voltage Cables
2. Section 260526 - Grounding and Bonding for Electrical

1.2 SUMMARY

A. Provide conduits, cable trays, surface raceways, boxes, fittings, and supports to form a complete, coordinated, and continuously grounded raceway system.

1.3 CONDUIT REQUIREMENTS

A. Conduits indoors in general areas shall be electrical metallic tubing (EMT) with steel set screw fittings.

B. Conduits indoors in hazardous areas, encased in concrete floor slabs or subjected to water, physical damage or abuse shall be galvanized rigid steel (RS) or intermediate metal conduit (IMC) with cast or malleable iron threaded fittings and bushings.

C. Conduits indoors for primary power distribution circuits or for fire pump feeders shall be galvanized rigid steel or intermediate metal conduit with cast or malleable iron threaded fittings and bushings. Where the conduits are routed through the building, they shall be encased in 2 inches of concrete.

D. Conduits outdoors shall be galvanized rigid steel or intermediate metal conduit with cast or malleable iron threaded fittings and bushings.

E. Conduits encased in concrete underground shall be Type DB PVC with matching fittings.

F. Conduits direct buried underground shall be Schedule 40 PVC with matching fittings.

G. Conduits in parking structures, steam tunnels and near or in cooling towers shall be fiberglass-reinforced epoxy or Schedule 80 PVC with matching fittings. Exceptions to this requirement are tunnel segments inside building (i.e., mechanical rooms), or in heated rooms of parking structures. In these cases EMT may be used

H. Final connections to recessed lighting fixtures and under-counter lights shall be 1/2" minimum flexible metallic conduit, manufactured wiring systems, or Type MC cable.

1. Manufactured wiring systems shall only be used above accessible ceilings.
2. Terminate Type MC cable with steel set screw connectors that have integral insulating bushings. Self-locking, twist-in type fittings are not acceptable.

I. Final connections to motors, transformers and equipment subject to vibration or removal for maintenance shall be 1/2" minimum liquid tight flexible metallic conduit with steel liquid tight fittings. Transformer connections may be non-liquid tight flexible metallic conduit in electrical rooms only.

J. Connections to recessed power receptacles, and light switches, in areas with accessible ceilings:

1. In new partitions and walls, the final connections may be made with Type MC cable. Type MC cable, shall:
   a. Be run to a box immediately above the accessible ceiling. The box size shall not exceed 4-11/16" square.
   b. Conduit shall be used for the entire run, from this junction box, to the power source, load (lights), etc.
   c. No more than three circuits may be run through any given junction box.
   d. Secure the Type MC cables in the wall cavity.
   e. Type MC cables shall be as short as possible.
2. In existing partitions and walls where the surface is not being otherwise opened up, the final connections to new devices may be made using flexible metallic conduit or Type MC cable.

K. Connections to other recessed devices, (including communication outlet boxes, junction or pull boxes, etc.) shall be with standard conduit of the type appropriate for the wall construction.

1.4 CABLE TRAY REQUIREMENTS

A. Power cable trays shall be aluminum ladder type of the sizes shown on the drawings.

B. Telecommunications cable trays shall be aluminum ladder type or zinc plated steel wire mesh type of the sizes shown on the drawings.

C. Center spline telecommunications cable tray may only be used where shown.

D. Changes in cable tray direction or elevation shall be made using standard fittings from the same manufacturer as the cable tray.

E. Barriers shall be installed in cable trays where shown to separate circuits of different voltage levels.

1.5 SURFACE RACEWAY REQUIREMENTS

A. When conduits in finished areas cannot be concealed in walls or above ceilings, surface raceways may be used where shown. Boxes and fittings shall match and be from the same manufacturer as the raceways.

1.6 J-HOOKS

A. Subject to the cable manufacturer's installation requirements, low voltage cables may be installed using J-hooks in rooms above accessible ceilings and in unfinished open ceiling areas. Do not use J-hooks in corridors, in finished open ceiling areas, above inaccessible ceilings or as a substitute for cable trays. Bridle rings shall not be used.

1.7 BOX REQUIREMENTS

A. Provide sheet steel outlet boxes, extensions, and plaster rings for EMT, flexible metal conduit, and Type MC cable.

B. Provide cast or malleable iron outlet boxes and covers for galvanized rigid steel conduits, intermediate metal conduits, and liquid tight flexible metal conduits.

C. Boxes shall be sized for all conductors and devices to be contained within. Box extensions shall not be used to correct for undersized boxes. A single extension may be used as follows only if all free conductors extend at least 3 inches outside of the extension opening.

1. On boxes being flush mounted in masonry walls.
2. On existing boxes in walls that are being furred out.
3. On existing boxes for connecting to an existing circuit.
4. On fire alarm, security and clock system boxes where required by the system manufacturer's instructions.

D. Plaster rings shall not be considered box extensions, but their capacities may be included in box fill calculations.

1.8 SUPPORT REQUIREMENTS

A. Surface mounted equipment shall be secured to steel channels. The channels shall be attached with toggle bolts to hollow tile, block or similar surfaces, and attached with screws or bolts and expansion shields to solid masonry or concrete.

PART 2 - PRODUCTS

2.1 CONDUITS

A. Electrical metallic tubing shall be thin wall steel tubing, electro-galvanized or hot dipped galvanized inside and outside. Fittings and bushings shall be galvanized steel set screw type with two screws per connection for sizes over 2".

B. Galvanized rigid steel conduit and intermediate metal conduit shall be hot dipped galvanized inside and outside, in 10' lengths and threaded on both ends. Fittings and bushings shall be cast or malleable iron, and hot dipped galvanized inside and outside.

C. PVC conduit and fittings shall be Type DB for encasement in concrete, Schedule 40 for direct burial, concealed and exposed work, and schedule 80 in parking structures. Fittings shall be of the same type and from the same manufacturer as the conduit. PVC conduit shall be UL Labeled for 90 degrees C cables. Cantex, Carlon, or National Pipe & Plastic.

D. Fiberglass reinforced epoxy conduit shall be standard wall, iron pipe size, sunlight resistant, gray color, with matching push-fit fittings. FRE or Champion.

E. Flexible metallic conduit shall be galvanized steel or aluminum. Fittings shall be of steel with cadmium or galvanized finish. Fittings shall be machine screw clamp type, single or two-piece. Self-locking, twist-in type fittings are not acceptable.

F. Liquid tight flexible metallic conduit shall consist of a flexible, galvanized steel core, a continuous copper ground strip and a polyvinyl chloride jacket. Fittings shall be steel liquid tight grounding type from the same manufacturer as the conduit.

2.2 CABLE TRAYS

A. Ladder type cable tray shall be aluminum, of the widths shown, with 4" rail height, 13/16" minimum rung width, and 9" maximum rung spacing. The tray with a 10' span shall be capable of sustaining a working load of 145 pounds per lineal foot with a load deflection of 1.0" when tested in accordance with NEMA VE 1. B-Line, Chalfant, Cope, Globetray, Husky, Legrand Cablofil, MonoSystems, or Thomas & Betts.

B. Wire mesh cable tray shall be of high strength steel rods meeting the mechanical properties of ASTM A510, of the widths shown, and with a 4" load depth minimum. Cable tray shall be constructed of wires configured in a 2" x 4" grid pattern with wires welded at intersection points. The ends of the wire grid shall be bent up to form the sides of the tray. Cut ends at the top and end rails shall be free of sharp edges to prevent damage to the cables and injury to installers. The tray shall be zinc electro-plated or zinc galvanized after forming and welding. The tray with a 8' span shall be capable of sustaining a working load of 32 pounds minimum per lineal foot with a load deflection of 1.2" when tested in accordance with NEMA VE 1. B-Line, Chalfant, Legrand Cablofil, or MonoSystems only.

C. Center spline cable tray shall be aluminum, of the width shown, with top mounted rungs, 3” load depth, 13/16” minimum rung width, and 9” maximum rung spacing. The tray with a 10' span shall be capable of sustaining a working load of 145 pounds per lineal foot with a load deflection of 1.0" when tested in accordance with NEMA VE1. B-Line, Legrand Cablofil, MonoSystems, or Thomas & Betts only.

D. Tray fittings including horizontal and vertical bends, tees, crosses, reducers, splice plates, expansion joints and cable roll-outs shall be from the same manufacturer and of the same product line as the tray. Ladder and center spline tray bends, tees, crosses and reducers shall have a 13/16” minimum rung width, a 9" maximum rung spacing, and a 12" minimum bend radius.

E. Tray fasteners shall be galvanized or zinc plated steel.

2.3 SURFACE RACEWAYS

A. Where surface raceways are called for on the drawings, or when conduits in finished areas cannot be concealed in walls or above ceilings, provide surface raceways. Raceway boxes and fittings shall match and be from the same manufacturer as the surface raceway.

B. Surface raceways shall consist of a base and cover, shall be sized for the number of conductors contained within, and shall be complete with all boxes, connectors, fittings, bushings, dividers and mounting hardware. For internal or external elbows, corners, or tees, provide raceway with 1-1/4" full-capacity bend radius.

C. Surface raceways shall be 600 volt rated and in compliance with the applicable paragraphs of NEC Article 352.

D. Surface raceways shall be non-flammable and UL labeled under UL 5 or UL 5A (as applicable).

E. The completed surface raceway system shall be vandal resistant.

F. Surface raceways shall accept receptacles, cover plates, telephone/data jacks and other standard wiring devices as specified elsewhere or shown on the drawings.

G. Cover plates used for wiring devices and telephone/data jacks shall be of the overlapping type and shall therefore cover the cut ends of the raceway cover.

SELECT THE REQUIRED COLOR AND DELETE THE OTHER COLORS. MATCH EXISTING COLOR WHEN ADDING TO EXISTING DEVICES.

H. Surface raceways shall be white (ivory, brown, gray) in color, have a scuff resistant finish, and be paintable. All components exposed to view shall be of the same color and shade.

I. Barriers shall be provided when necessary to separate conductors of different voltages or services.

SELECT THE REQUIRED MATERIAL AND DELETE UNNEEDED REQUIREMENTS.

J. Surface raceways shall be steel (plastic) as noted below:

1. Metallic
   a. Metallic raceways shall be of .040" thick (minimum) zinc plated or galvanized steel.
   b. The acceptable levels of quality are as provided by:
      1) Wiremold 500 Series and 700 Series for smaller single channel raceway applications,
      2) Wiremold 3000 Series for larger single channel raceway applications, and
      3) Wiremold 4000 Series for larger multi-channel raceway applications.
   c. Manufacturers include Hubbell, MonoSystems, Thomas and Betts, or Wiremold.
2. Plastic
   a. Plastic raceways shall be of a material meeting all of the requirements of UL 5A, (including flammability, resistivity, structural strength, etc.).
   b. The acceptable levels of quality are as provided by:

1) Panduit Series LDS5 and LDS7, Carlon Series 30 or Wiremold Series PN05 or PN10 for raceway applications when surface raceway replaces conduit in finished areas.
2) Panduit LD Series, Carlon Series 30 or Wiremold Series PN05 for smaller single channel raceway applications.
3) Panduit Type T-70, Carlon Premiere or Wiremold Type 40N2 for larger single or multi-channel raceway applications.
4) Panduit Twin 70, Carlon Prestige or Wiremold Type 60N2 for larger multi-channel raceway applications.

c. Manufacturers include Carlon, Hubbell, MonoSystems, Panduit or Wiremold.

2.4 J-HOOKS

A. J-hooks shall be zinc electro-plated steel or plastic, UL Listed for use in plenum spaces, with a minimum of a 3/4 inch wide cable support area, and rated for use with Categories 5e and 6 UTP, fire alarm, security, temperature controls and similar low voltage cables. J-hooks shall include a retaining means for closing the hook so the cables do not fall out.

2.5 BOXES

A. Boxes for fixtures, outlets, switches, equipment connections and wire pulling shall be

1. Cast or formed from carbon steel sheets of commercial grade steel not less than 14-gauge,
2. One-piece construction, zinc, or cadmium plated,
3. Tapped for mounting plates and covers as required.

B. Pull and junction boxes shall be

1. Fabricated from galvanized or painted code gauge cold rolled carbon steel sheets.
2. Welded construction with flat removable covers fastened to the box with machine screws.
3. Seams and joints shall be closed and reinforced with flanges formed of the same material from which the box is constructed or by continuous welding which will provide equivalent strength to flange construction.
4. Preferably not provided with 'knockouts'.

C. Box covers shall be fastened in place by machine screws or hinges and latches. Self-tapping or sheet metal fasteners are not acceptable.

2.6 SUPPORTS

A. Hangers and brackets shall be made of steel pipe, channel iron, angle iron or prefabricated steel channel. Prefabricated steel channel shall be by B-Line, Hilti, Powerstrut, or Unistrut.

B. Anchors shall be lead shield anchors or plastic expansion anchors for small loads, and expansion or epoxy anchors for large loads. Powder-driven anchors shall not be used.

2.7 NAMEPLATES, LABELS AND DIRECTORIES

A. Equipment nameplates shall be engraved .125 inch (1/8") thick laminated plastic, white, with black letters. The engraved letters shall be at least one quarter inch (1/4") high.

B. Arc flash hazard warning labels shall be 3" by 5" minimum, white with a yellow, orange or red stripe header and black font, of ultraviolet and weather-resistant nylon, and adhesive backed.

C. Receptacle and light switch plates shall be labeled using clear adhesive backed nylon or Mylar tape with black text permanently laminated to the tape.

D. Panel directories shall be typed on supplied card stock with panel, or card stock similar in thickness and material as those supplied with the panels. Install supplied clear plastic cover, or one of like material.

PART 3 - EXECUTION

3.1 CONDUITS

A. Size conduits in accordance with the NEC, but not less than the sizes shown on the drawings. Minimum power and control conduit size shall be 1/2". Minimum telecommunications conduit size shall be 1".

B. Install concealed and exposed conduits and cable trays parallel to or at right angles to building lines. Conduits shall not be embedded in concrete slabs except where specifically shown. Install surface raceways as close to room corners or trim features as possible to make the surface raceways less obvious. Where conduits are routed over beams and under corrugated decking, conduits shall be offset 3” below the decking to avoid damage from future decking penetrations.

C. Make directional changes in primary power distribution conduits above ground with sweeps and long radius elbows, and underground with 20' minimum radius bends.

D. Conceal conduits wherever possible and practical. When conduits cannot be concealed in finished areas, use surface raceways with matching boxes from the same manufacturer as the raceways.

E. Metal conduits, fittings, enclosures and raceways shall be mechanically joined together in a firm assembly to form a continuous electrical conductor providing effective electrical grounding continuity.

F. Provide expansion fittings between adjacent buildings, at building expansion joints and in straight runs at the intervals specified in the manufacturer's instructions.

G. Conduits entering panels located outdoors, in parking structures, in steam tunnels and on cooling towers shall enter from the sides, back, or bottom. Conduits shall not enter from the top.

H. Separate raceways from un-insulated steam pipes, hot water pipes, and other hot surfaces by a minimum of 4” horizontally or 12” vertically. Separate raceways from ventilation ducts and insulated pipes so that they do not come into contact with each other.

I. Low voltage signal circuits shall be separated or shielded from power circuits to prevent the induction of noise into the signal circuits.

J. EMT entering sheet metal enclosures and outlet boxes shall be secured in place by a connector with a locknut. Rigid conduit shall be secured with locknut inside and outside and a bushing. Sufficient thread on the connector or conduit shall extend into the enclosure so that the bushing will butt tight into the connector or conduit. Bushings shall not be used as jamb nuts or in lieu of locknuts.

K. Flexible metallic conduit to motors and similar equipment shall not exceed 3'-0" in length, and shall have adequate slack to absorb the maximum vibration. Flexible conduit connections to lighting fixtures shall not exceed 6'-0" in length.

3.2 CABLE TRAYS

A. Install cable trays in accordance with NEMA VE 2. Install trays parallel to or at right angles to building lines. Provide a minimum of 12" working space above and 12" working space along one side for cable installation.

B. Support cable trays with trapeze hangers spaced 10' maximum on center for ladder trays and 8' on center maximum for wire mesh trays. Center hung supports are not allowed

C. After cable installation, firestop cable tray penetrations in fire rated walls with intumescent fire protective bags, bricks or sealant in accordance with the appropriate UL approved system.

3.3 SURFACE RACEWAYS

A. Install surface raceways parallel or perpendicular to building lines.

B. Locate surface raceways as close to room corners or vertical breaks in mid wall as is possible.

C. Provide vertical surface raceways to feed cables from junction boxes above the ceiling to horizontal surface raceways. Exposed vertical conduits are not acceptable.

3.4 J-HOOKS

A. Install cables in J-hooks as follows.

1. Install cables parallel or perpendicular to building lines.
2. Space J-hooks in accordance with the cable manufacturers' instructions, but not more than 5 feet apart and not more than 3 feet from both sides of a change in direction.
3. Maintain a minimum separation of 2” from lighting ballasts, transformers, motors, power circuits and similar equipment.
4. Anchor J-hooks to walls or suspend J-hooks using 1/4-inch minimum diameter threaded rod hangers. Do not support J-hooks from ceiling or equipment hangers. J-hooks shall not impede removal of accessible ceiling tiles.
5. Load J-hooks to no more than the maximum fill stated in the J-hook manufacturer's instructions.

6. Cables shall not sag more than 12 inches between J-hooks and shall not impede access to equipment requiring maintenance.
7. Cables in open areas shall be a minimum of 10 feet A.F.F. and a maximum of 16 feet A.F.F.
8. Cables above accessible ceilings shall not touch the ceiling grid or tiles.
9. Cables shall be protected from physical damage.
10. Cables shall be completely accessible for replacement. Cables hidden above ductwork or other obstructions, and cables so high they cannot be reached safely while standing on a ladder shall be replaced with cables in new J-hooks located in a more accessible location.

B. Provide conduit sleeves for cables penetrating walls. If cables in J-hooks penetrate a corridor wall from a room, and the distance from the corridor wall to the corridor cable tray is more than 18 inches, provide conduit stubs through the wall to the cable tray.

C. Contain cables inside J-hooks in accordance with the J-hook manufacturer's instructions so cables do not fall out, but so existing cables can be pulled out and new cables can be pulled in. Cables shall not be strapped to the J-hooks. Bond the conduit stubs to the cable tray.

D. Provide separate J-hooks for each cable system. Cables from one system shall not use the J-hooks of another system.

E. Color code J-hooks to indicate the system of the cables they contain:

1. Telecommunications - silver or gray
2. Fire alarm – red.
3. Temperature controls – blue.
4. Laboratory controls - white.
5. Security & card access control – orange.
6. Audio/visual – yellow.

3.5 MOUNTING HEIGHTS

A. Except where shown otherwise, install equipment and devices at the following heights:

1. Receptacles (Wall Mount): 18" A.F.F. to center
2. Receptacles (Above Counter): 44" A.F.F. to center
3. Receptacles (Unfinished Area): 44" A.F.F. to center
4. Surface Raceway Receptacle Strips: 42" A.F.F. to bottom
5. Light Switches: 44" A.F.F. to center
6. Telephone Outlets (Wall Phone): 44" A.F.F. to center
7. Telephone/Data Outlets: 18" A.F.F. to center
8. Clocks: 88" A.F.F. to bottom
9. Exit Signs: 88" A.F.F. to bottom
10. Emergency Light Wall Packs: 88" A.F.F. to bottom
11. Fire Alarm Pull Stations: 44" A.F.F. to center
12. Fire Alarm Horn/Strobes and Speaker/Strobes: Entire strobe lens at a uniform height between 80" A.F.F. and 96" A.F.F.
13. Card Readers (Wall Mount): 42" A.F.F. to center
14. Card Readers (Pedestal Mount): 36" A.F.F. to center
15. Door Actuator Pushbutton (Wall and Pedestal Mount): 36" A.F.F. to center

16. Card Reader and Door Actuator Pushbutton (Stacked Vertically): Card Reader 42" A.F.F. to center and Pushbutton 36" A.F.F. to center
17. Security System Controls: 44” A.F.F. to center
18. Thermostats/HVAC Controls: 44” A.F.F. to center
19. Electrical Panels: 72" A.F.F. to top
20. Safety Switches/Motor Starters/Variable Frequency Drives: 72" A.F.F. to top (except top of handle shall not exceed 78" A.F.F.)
21. Motor Control Pushbuttons: 60" A.F.F. to center

3.6 SUPPORTS

A. Provide 4" thick concrete housekeeping pads for floor-mounted equipment.

B. Support all electrical items independently of supports provided by the other trades.

C. Support conduits and boxes using steel conduit straps or 1/4-inch minimum diameter threaded rod hangers. Suspended ceiling hangers or hanger wire shall not be used.

D. Support cable trays with support brackets or 3/8" diameter minimum threaded rod hangers at intervals not exceeding 10'-0" for ladder cable trays and 8'-0" for wire mesh cable trays. Additional supports shall be provided at tray fittings.

E. Hangers shall be of sufficient strength that their deflection at mid span does not exceed 1/240 of the hanger span length after the cables are installed.

F. Route flexible metallic conduit, manufactured wiring systems and Type MC cable parallel to or perpendicular to building lines, and in a neat and workmanlike manner. Coil the excess and support independently of the ceiling grid system.

3.7 PENETRATIONS, SLEEVES AND FIRE SEALS

A. Cut floor and wall penetrations neatly and to the minimum size required for installation of the equipment and raceways.

B. Provide galvanized steel pipe sleeves for all conduits penetrating floors, exterior walls and roofs.

1. Extend floor sleeves above the floor a minimum of 2 inches.
2. Embed sleeves in new concrete or step-core concrete and grout sleeves into existing concrete with epoxy grout.
3. Seal floor sleeves using fire-sealing systems approved by a Nationally Recognized Testing Laboratory.
4. Seal exterior wall and roof penetrations water tight.

C. Patch both sides of wall penetrations cut for electrical equipment and raceways to seal against the passage of air, sound and fire.

1. Seal cable tray penetrations in fire rated walls using fire sealant bags approved by a Nationally Recognized Testing Laboratory.
2. Seal conduit penetrations in fire rated walls using fire-sealing caulk approved by a Nationally Recognized Testing Laboratory.

3. Seal conduit penetrations in non-rated walls using masonry materials that match the wall construction.
4. Fire seal between recessed outlet boxes located on opposite sides of a fire rated wall if the box openings are over 16 square inches and the boxes are less than 24 inches apart.

3.8 EXPANSION FITTINGS

A. Provide expansion fittings at all building expansion joints. Expansion fittings shall be bonded to the raceway on both sides.

B. Provide expansion fittings, in accordance with manufacture recommendations, in all areas subject to swings in temperature of more than 15 degrees C.

C. Install expansion fittings in all locations were expected expansion difference is 1/4", or more, between boxes.

3.9 IDENTIFICATION

A. Provide nameplates and labels in accordance with Article 2.7.

1. Laminated plastic labels shall be mechanically secured in place with sheet metal screws and/or bolts and nuts.
2. Labels shall be neatly centered. Place labels in like positions on similar equipment.

B. Color code wiring in accordance with Section 260513.

C. Color code junction boxes and box covers of emergency and fire alarm circuits with red paint. Color code junction boxes and box covers of temperature control circuits with blue paint.

D. Mark junction box covers in indelible ink with the panel and breaker numbers of the circuits contained within.

E. Provide generic "Warning - Arc Flash Hazard" labels on equipment with an arc flash incident energy level exceeding 1.2 calories/square centimeter and likely to require examination, adjustment, servicing or maintenance while energized. This includes but is not limited to automatic transfer switches, switchboards, panelboards, transformers, storage batteries, battery chargers, inverters, control panels, variable speed drives, motor controllers, circuit breakers and disconnect switches. Provide labels for the line and load sides of fused disconnect switches and circuit breakers 800 amps and above, and for the primary and secondary sides of transformers.

1. Contractor-provided labels are not required on primary switchgear or unit substations. U-M Plant Operations will provide device-specific labels on this equipment.
2. Contractor-provided labels are not required on equipment that is factory labeled by the manufacturer.
3. Center the labels horizontally and vertically on the outsides of panel doors, covers, etc. to ensure they are visible to maintenance personnel before the equipment is opened up.

3.10 FIELD QUALITY CONTROL

A. Perform visual inspections to verify the following:

1. The equipment is properly installed and anchored.
2. The equipment is free from damage and defects.
3. Electrical terminations have been properly tightened.
4. The equipment has been thoroughly cleaned inside and outside.
5. The equipment is properly labeled and labels are correct.

END OF SECTION 260533

UNIVERSITY OF MICHIGAN
ARCHITECTURE, ENGINEERING AND CONSTRUCTION

ARCHITECTURE & ENGINEERING
326 East Hoover, Mail Stop B
Ann Arbor, MI 48109-1002
Phone: 734-764-3414
Fax: 734-936-3334

BuildingName
The Description of the Project
P00000000 0000

SPECIFICATION DIVISION 26

NUMBER SECTION DESCRIPTION

DIVISION 26 ELECTRICAL
SECTION 260543 - UNDERGROUND SERVICES FOR ELECTRICAL SYSTEMS

END OF CONTENTS TABLE

DIVISION 26 ELECTRICAL
SECTION 260543 - UNDERGROUND SERVICES FOR ELECTRICAL SYSTEMS

PART 1 - GENERAL

1.1 RELATED DOCUMENTS

INCLUDE PARAGRAPH 1.1.A AND B IN EVERY SPECIFICATION SECTION. EDIT RELATED SECTIONS 1.1.B TO MAKE IT PROJECT SPECIFIC.

A. Drawings and general provisions of the Contract, Standard General and Supplementary General Conditions, Division 1 Specification Sections, and other applicable Specification Sections, in particular the Related Sections listed below, apply to this Section.

B. Related Sections:

1. Section 260513 - Medium, Low & Control Voltage Cables
2. Section 260526 - Grounding and Bonding for Electrical
3. Section 260533 - Electrical Materials and Methods

1.2 SUMMARY

A. Provide concrete encased duct banks with manholes and pullholes for medium voltage primary cables and telecommunications/data cables. Provide direct buried ducts and handholes for secondary power cables and site lighting cables.

1.3 DUCT BANK REQUIREMENTS

A. Ducts for concrete encased duct banks shall be Type DB PVC conduits with matching fittings except where galvanized rigid steel conduits and fittings are shown.

B. Ducts for direct burial underground shall be Schedule 40 PVC with matching fittings.

1.4 MANHOLE REQUIREMENTS

A. Manholes shall be precast or cast in place reinforced concrete. Primary manholes shall have inside dimensions of 10’ wide by 10’ long by 7’ high. Communications manholes shall have inside dimensions of 6’ wide by 12’ long by 7’ high.

B. Manholes shall include a cast iron frame with cover, a hot dipped galvanized steel ladder, hot dipped galvanized pulling eyes embedded in the concrete walls opposite each duct entrance and in the floor beneath the cover, and a sealed indentation for use of a portable pump, offset to one side to clear pulling iron.

C. Primary manholes shall contain a minimum of 2 vertical stanchions on each wall. The stanchions shall be Underground Devices CR-36.

D. Primary manholes shall contain cable racks for routing cables between the duct openings. The racks shall be Underground Devices with 20” arms.

E. Telecommunications manholes shall include: 14-"47 Hole" racks, 7 on each long wall, 16-"B" brackets, 4 in each corner, and 24-"S" brackets in side walls.

PART 2 - PRODUCTS

2.1 DUCTS

A. PVC conduit and fittings for encasement in concrete shall be Type DB, UL Labeled for 90 degrees C cables. Carlon or Cantex.

B. PVC conduit and fittings for direct burial, concealed and exposed use shall be Schedule 40, UL Labeled for 90°C cables. Carlon or Cantex.

C. Galvanized rigid steel conduit shall be hot dipped galvanized inside and outside, in 10' lengths threaded on both ends. Allied, Republic Steel, Triangle PWC, Wheatland or Western Tube.

D. Steel Casing pipe shall be non-spiral pipe and have a minimum yield strength of 35,000 psi. All joints shall be made leak-proof using full penetration, continuous welds. Welds shall be ground smooth outside and inside (except 22" diameter and less) to prevent conflict with the soil or pipe placement. Steel pipe shall meet the requirements of ASTM A53, Type E or S, Grade B.

1. The following information shall be clearly marked on each length of pipe:
   a. The pipe designation and class (e.g., A53, Type S, Grade B).
   b. The name or trademark of the manufacturer.
   c. Identification of the manufacturing plant.
   d.
2. All pipe furnished shall be subject to inspection on arrival at the job site. The purpose of the inspection shall be to cull and reject pipe that, independent of physical tests specified under the standard specifications designated herein, fails to conform to the requirements of these specifications.
3.
4. 3. Rejected pipe shall be plainly marked by the Inspector and immediately removed from the site of the work by the Contractor, without cost to The University of Michigan.

2.2 MARKER STRIP

A. Marker strip shall be red plastic, 6" wide, and labeled to indicate type of service. Brady or Seaton.

PART 3 - EXECUTION

3.1 DUCT BANK INSTALLATION REQUIREMENTS

A. Concrete encased and direct buried ducts (except site lighting ducts) shall be 4" minimum.

B. Duct banks shall be supported on undisturbed soil or on piers extending down to undisturbed soil.

C. Changes in duct bank direction shall be made with 10’ minimum radius bends for telecommunications, and 20’ minimum radius bends for power. Manufactured sweeps are preferred.

D. Duct banks shall be sloped downward toward manholes and away from buildings a minimum of 6” per 100’. Duct banks shall not contain traps where water may accumulate.

E. End bells shall be installed on primary duct ends where the ducts enter the manholes and buildings. End bells shall be firmly embedded in and flush with the inside surface of the wall.

F. Pull a solid mandrel and a stiff bristled brush through each duct to clean them and insure the absence of kinks and flat spots. A minimum 3-1/4" diameter by 5" minimum long mandrel shall be used for 4" conduit and a minimum 4" diameter by 6" minimum long mandrel shall be used for 5" diameter conduit. The mandrel pull shall be witnessed by the Owner's Representative.

G. Direct buried a 3” thick minimum concrete cover shall protect ducts over the entire length and width of the duct bank.

H. Duct banks shall be marked with a 6” wide red plastic marker strip placed in the backfill approximately 12” above the entire length of the duct bank.

I. All ducts installed by this project shall contain measuring-type pull tape, Greenlee No. 435 or similar. The tape shall be waterproof polyester or nylon, printed with length measurements every foot to indicate the length of the duct, and have a minimum breaking strength of 130 lbs. A minimum of 60" of excess is required at both ends.

3.2 MANHOLE INSTALLATION REQUIREMENTS

A. Manholes shall be accessible by trucks, cable reel trailers and other cable pulling equipment.

B. Underground ducts shall be permanently identified in the manholes and at both ends with numbered tags. Tagging requirements shall be obtained from the Owner’s Electric Shop through the Owner’s Representative.

3.3 GROUNDING

A. Primary duct banks shall be grounded with a No. 4/0 AWG bare stranded copper ground wire that is run within the duct bank and is bonded and grounded at both ends. Conduit shall not be used as the ground conductor.

B. Primary manholes shall be grounded with four ¾" diameter by 10' long ground rods, one driven inside or outside of the manhole at each corner. Connect the ground rods with a No. 4/0 AWG bare, stranded copper ground wire loop. A No. 2 AWG bare stranded copper pigtail from the ground wire loop shall be used to bond together and ground the manhole cover frame, ladder support bracket, concrete inserts, metallic cable racks, duct bank ground conductors, and the shields of any primary cables that are spliced in the manhole.

3.4 FIELD QUALITY CONTROL

A. The University shall assign an agent to coordinate Quality Control associated with activities as outlined throughout Part 3, "Execution".

B. Contractor shall assist with establishing the order, timing, and duration of the activities requiring Quality Control for inclusion in the Project Schedule.

C. The electrical equipment and construction to be observed by the Quality Control Agent include the following:

1. Manholes
2. Spacers
3. Grounding
4. Bell Ends
5. Concrete Pours

D. Provide the Quality Control Agent with reports, lists, forms, plans and drawings described throughout Part 3, "Execution".

E. During the Shop Drawing Submittal Process, submit one set of the Shop Drawings to the Quality Control Agent for Review. Return to the Quality Control Agent one set of the A/E reviewed and stamped Shop Drawings.

F. Correct the incomplete and non-conforming items that are identified by the Quality Control Agent.

END OF SECTION 260543

UNIVERSITY OF MICHIGAN
ARCHITECTURE, ENGINEERING AND CONSTRUCTION

ARCHITECTURE & ENGINEERING
326 East Hoover, Mail Stop B
Ann Arbor, MI 48109-1002
Phone: 734-764-3414
Fax: 734-936-3334

BuildingName
The Description of the Project
P00000000 0000

SPECIFICATION DIVISION 26

NUMBER SECTION DESCRIPTION

DIVISION 26 ELECTRICAL
SECTION 260800 - ELECTRICAL ACCEPTANCE TESTS

END OF CONTENTS TABLE

DIVISION 26 ELECTRICAL
SECTION 260800 - ELECTRICAL ACCEPTANCE TESTS

PART 1 - GENERAL

1.1 RELATED DOCUMENTS

INCLUDE PARAGRAPH 1.1.A AND B IN EVERY SPECIFICATION SECTION. EDIT RELATED SECTIONS 1.1.B TO MAKE IT PROJECT SPECIFIC.

A. Drawings and general provisions of the Contract, Standard General and Supplementary General Conditions, Division 01 Specification Sections, and other applicable Specification Sections, in particular the Related Sections listed below, apply to this Section.

IN 1 BELOW, SELECT PROPER COMMISSIONING SPEC SECTION NUMBER APPLICABLE TO THE PROJECT.

B. Related Sections:

1. Section 019100/019110 - Commissioning
2. Section 017823 - Operation and Maintenance Manual

1.2 TESTS

A. Perform the visual inspections, manual operations and tests on systems and equipment as described in Part 3, "Execution".

B. Tests shall be performed and documented by an independent testing agency.

1.3 TEST REPORTS

A. Provide written test reports, signed and dated, for all tests prior to acceptance of the tested equipment by the Owner. Test reports on Megger, dielectric absorption and high potential tests shall include the ambient temperature and relative humidity existing at the time of the tests.

PART 2 - PRODUCTS (NOT APPLICABLE)

PART 3 - EXECUTION

3.1 VISUAL INSPECTIONS

A. Prior to any testing, perform visual inspections to verify the following:

1. The equipment is properly installed and anchored.
2. The equipment is free from damage and defects.
3. Shipping blocks and restraints have been removed.
4. Electrical terminations have been properly tightened.
5. The equipment has been properly aligned.
6. The equipment has been properly lubricated.

7. The ventilation louvers are open and unobstructed.
8. The equipment has been thoroughly cleaned inside and outside.
9. The equipment is properly labeled and labels are correct.
10. The equipment is ready to be tested.

3.2 MANUAL OPERATION

A. Prior to any testing, mechanical devices shall be exercised or rotated manually to verify that they operate properly and freely.

3.3 PRIMARY CABLE TESTS

A. Perform a continuity test, 2,500-volt DC Megger test, a DC high potential test, and a second 2,500-volt DC Megger test on primary cables. The high potential test shall be performed at 45kV for new cable and at 30kV when new cable has been spliced to existing cable.

3.4 POWER CABLE TESTS

A. Perform a continuity check and a 1,000 volt DC Megger test on 600 volt power cables No. 4 AWG and larger.

1. The Megger test shall be performed between each pair of conductors and from each conductor to ground.
2. The Megger test shall be performed for 15 seconds or until the insulation resistance value stabilizes.
3. The insulation resistance between conductors and from each conductor to ground shall be 100 megohms minimum in one minute or less. In addition, the lowest insulation resistance value shall not differ from the highest resistance value by more than 20 percent. But if the lowest value is above 1,000 megohms, the 20% balance requirement may be waived.

3.5 CONTROL CABLE TESTS

A. Perform a continuity check on control and instrumentation wiring.

3.6 ENGINE-GENERATOR SYSTEM TESTS

A. Perform a continuity check and 1,000 volt DC Megger test on the generator windings, generator circuit breaker, power circuit portions of the automatic transfer switch, and interconnecting power circuit wiring.

B. Perform a continuity check on the control wiring.

C. Calibrate the metering and time delay relays.

D. Perform the normal start-up testing recommended by the engine-generator manufacturer.

E. Perform a load bank test of overall system with a load bank rated at 100% preferred for a period of at least 120 minutes.

1. Open normal power to transfer switch and observe proper operation of engine-generator and automatic transfer switch (throwing over to emergency power), noting engine-generator start, time delays and other appropriate variables.
2. Close normal power and observe proper transfer back to normal and proper shutdown of engine-generator, again noting time delays and other appropriate variables.
3. Operate maintenance bypass switch to insure proper labeling and operation in all modes

F. Test operation of all generator control and alarm connections to the Automatic Transfer Switches, remote annunciator(s), the Fire Command Center, the fire alarm system, the BAS system, and accessories under all conditions.

3.7 PRIMARY SWITCH TESTS

A. Perform a continuity check, 2,500-volt DC Megger test, and a DC high potential test on primary switches. DC high potential tests shall be performed at 37kV on new and existing primary switches.

3.8 SUBSTATION TRANSFORMER TESTS

A. Perform a DC Megger test and a turns-ratio test on unit substation transformers. The DC Megger test shall be performed at 2,500 volts on coils rated over 600 volts, and at 1,000 volts on coils rated 600 volts and below. The turns-ratio test shall be performed on each tap.

B. Verify proper setting and operation of the fan control panel to insure it and the fans are operable and functional. Temperature-test the probes in each winding.

3.9 SECONDARY SWITCHGEAR TESTS

A. Perform a continuity check and 1,000 volt DC Megger test on buses, and on main and feeder breakers.

B. Perform a primary current injection test and a 'Ducter' (contact resistance) test on main breakers.

C. Perform a 1,000-volt DC Megger test and a turns-ratio test on CT's and PT's.

D. Calibrate the metering.

3.10 SERVICE, DISTRIBUTION AND MOTOR CONTROL EQUIPMENT TESTS

A. Verify proper phasing of power circuits.

B. Perform a 1,000-volt Megger test on buses, motor starters and disconnect switches. This test may be combined with the power cable Megger test by testing the equipment and terminated cables together.

C. Perform a continuity check on control circuits and control panel internal wiring.

D. Perform an operational test on the controls and alarms.

E. Perform a continuity check and a 1,000-volt DC Megger test on 3 phase distribution and isolation transformers.

3.11 MOTOR TESTS

A. Perform a 1,000-volt Megger test on 460 volt, 3 phase motors, and a 500 volt Megger test on 200 volt, 3 phase motors.

B. "Bump" motors to verify proper direction of rotation.

C. Run motors and check for vibration.

3.12 GROUNDING TESTS

A. Measure the resistance to ground of each ground rod before connection to the other ground rods. The resistance shall not exceed 10 ohms.

B. Measure the resistance to ground of the total ground system with all connections completed. The resistance shall not exceed 2 ohms for primary services or 5 ohms for secondary services.

C. Tests of the resistance to ground shall be made using either the three point method or the fall-of-potential method.

D. Perform a continuity check from equipment ground bus bars and ground lugs to the ground system.

3.13 FIRE ALARM SYSTEMS

A. Perform testing in accordance with NFPA 72.

3.14 HEAT TRACING CABLES AND MATS

A. Perform a continuity check, 500-volt DC Megger test and an operational test on heat tracing circuits prior to insulation of the pipe or tank. Verify proper current draw and heating of the heat tracing.

B. Perform an operational test on the alarms as applicable.

3.15 COMMISSIONING

A. Perform Commissioning activities per Related Sections above.

END OF SECTION 260800

UNIVERSITY OF MICHIGAN
ARCHITECTURE, ENGINEERING AND CONSTRUCTION

ARCHITECTURE & ENGINEERING
326 East Hoover, Mail Stop B
Ann Arbor, MI 48109-1002
Phone: 734-764-3414
Fax: 734-936-3334

BuildingName
The Description of the Project
P00000000 0000

SPECIFICATION DIVISION 26

NUMBER SECTION DESCRIPTION

DIVISION 26 ELECTRICAL
SECTION 261000 - MEDIUM VOLTAGE ELECTRICAL DISTRIBUTION

END OF CONTENTS TABLE

DIVISION 26 ELECTRICAL
SECTION 261000 - MEDIUM VOLTAGE ELECTRICAL DISTRIBUTION

PART 1 - GENERAL

1.1 RELATED DOCUMENTS

INCLUDE PARAGRAPH 1.1.A AND B IN EVERY SPECIFICATION SECTION. EDIT RELATED SECTIONS 1.1.B TO MAKE IT PROJECT SPECIFIC.

A. Drawings and general provisions of the Contract, Standard General and Supplementary General Conditions, Division 1 Specification Sections, and other applicable Specification Sections including the Related Sections listed below, apply to this Section.

IN 1 AND 2 BELOW, DELETE SUSTAINABLE DESIGN IF NOT APPLICABLE TO THE PROJECT. SELECT PROPER COMMISSIONING SPEC SECTION NUMBER APPLICABLE TO THE PROJECT.

B. Related Sections:

1. Section 018113 - Sustainable Design Requirements
2. Section 019100/019110 - Commissioning
3. Section 017823 - Operation and Maintenance Manual
4. Section 260513 - Medium, Low & Control Voltage Cables
5. Section 260526 - Grounding and Bonding for Electrical
6. Section 260533 - Electrical Materials and Methods
7. Section 260800 - Electrical Acceptance Tests

1.2 PHASING

A. The Owner’s primary system phase rotation is A-B-C.

B. Phase new installations X-Y-Z (or A-B-C) from top to bottom, front to back and left to right when viewed from the front. Phase existing installations to match the existing.

1.3 SPLICES AND TERMINATIONS

A. The Owner's Electric Shop primary crew shall install medium voltage primary cable splices. Coordinate installation through the Owner’s Representative. Splices shall be made with Raychem Type HVS heat shrink splice kits only. Connectors for straight splicing shall be of the two way, solderless, compression type.

B. Medium voltage primary cable terminations shall be made with Raychem Type HVT heat shrink termination kits or 3M Company Quick Term cold shrink termination kits. Lugs for terminations shall be of the two-hole, solderless, compression type.

PART 2 - PRODUCTS (NOT APPLICABLE)

PART 3 - EXECUTION

3.1 INSTALLATION REQUIREMENTS

A. Pull primary cables in lengths not exceeding 500 feet. Avoid exceeding manufacturer's recommendations on pulling tension, sidewall pressures and cable bend radii. Train cables passing through manholes neatly in the same relative positions as in the duct bank, without crossing each other, and support them by porcelain insulators from the manhole cable racks.

B. Ground the shields of primary cables at both ends. When primary cables are spliced in manholes, bond the cable shields at the splices to the manhole ground system.

C. Identify the cable phases at all primary cable terminations. Identify phases in 1-1/2" high minimum letters painted on the cable supports or potheads wherever possible. When painting is not possible, identify phases in 1/2" high minimum letters on tags permanently attached to the cables.

3.2 FIELD QUALITY CONTROL

A. Perform testing in accordance with Specification Section 260800, and submit a test report.

3.3 COMMISSIONING

A. Perform Commissioning activities per Related Sections above.

END OF SECTION 261000

UNIVERSITY OF MICHIGAN
ARCHITECTURE, ENGINEERING AND CONSTRUCTION

ARCHITECTURE & ENGINEERING
326 East Hoover, Mail Stop B
Ann Arbor, MI 48109-1002
Phone: 734-764-3414
Fax: 734-936-3334

BuildingName
The Description of the Project
P00000000 0000

SPECIFICATION DIVISION 26

NUMBER SECTION DESCRIPTION

DIVISION 26 ELECTRICAL
SECTION 261100 - UNIT SUBSTATIONS

END OF CONTENTS TABLE

DIVISION 26 ELECTRICAL
SECTION 261100 - UNIT SUBSTATIONS

PART 1 - GENERAL

1.1 RELATED DOCUMENTS

A. Drawings and general provisions of the Contract, Standard General and Supplementary General Conditions, Division 1 Specification Sections, and other applicable Specification Sections, in particular the Related Sections listed below, apply to this Section.

B. Related Sections:

1. Section 017823 - Operation and Maintenance Manual
2. Section 019100/019110 - Commissioning
3. Section 260513 - Medium, Low & Control Voltage Cables
4. Section 260526 - Grounding and Bonding for Electrical
5. Section 260533 - Electrical Materials and Methods
6. Section 260800 - Electrical Acceptance Tests

1.2 SUMMARY

A. Provide an indoor, metal enclosed, unit substation assembly, configured as single-ended or double-ended as shown on the drawings, and consisting of primary section(s), transformer section(s), and secondary voltage distribution section(s). Provide associated controls and relays; do not provide PLC-based controls, micro-processor based human machine interfaces (HMI), or touch screen displays.

B. The substation and its major assemblies shall be designed and shipped in sections to accommodate the restricted size and configuration of the delivery route through the building, and the size of the substation room.

C. Deliver the unit substation, in one coordinated shipment, to the installing Contractor at the project site, on or before the week of _____. The project site is at _____, Ann Arbor MI 48109-2080.

D. Coordinate final delivery date, time, and other details with installing Contractor (to be named) at least 3 business days in advance of delivery date. Under Manufacturer's supervision, the installing Contractor will unload, move into position, and install the overall unit substation.

E. Provide supervision for the "breakdown" and "re-assembly" of the transformer section as needed to allow installation into the building.

F. Before energization, provide a final inspection, testing, and written certification from the equipment supplier.

G. Assist with substation start-up and commissioning activities.

H. Provide a one-year minimum warranty from the date of acceptance by the University.

I. The attached drawings are an integral part of these specifications. Carefully note the physical size of the unit, as well as shipping split and other physical restrictions noted on these drawings. Attached drawings include:

1. Drawing _____
2. Drawing _____
3. Drawing _____
4. etc…

1.3 RELATED SECTIONS

A. The drawings and the general provisions of the contract, including the current edition of the University of Michigan Standard General Conditions, apply to this section.

B. The applicable requirements of the Division 01 and other Division 26 specification sections apply to this section.

1.4 REFERENCES

A. The unit substation shall comply with the following codes and standards as applicable:

1. MV Load Interrupter Switchgear: ANSI C37.20.3 and 20.4, ANSI C37.22, NEMA SG-5, and NEMA SG-6.
2. Secondary Substation Transformers: 10 CFR Part 431, ANSI C57, IEEE 100, NEMA 201 and 210, and UL 1562.
3. LV Metal-Enclosed Switchgear Assemblies: ANSI-C37.20, NEMA SG-5, and UL 1558.
4. Low-Voltage Power Circuit Breakers: ANSI-C37.13, NEMA SG-3.
5. Circuit Breaker Trip Devices: ANSI-C37.17.
6. National Electrical Code (NEC): NFPA 70.

B. Where differences exist between various Codes and Standards, the ANSI and IEEE Standards shall govern.

C. Each of the three main sections of the substation (primary switch section, transformer section, and secondary distribution section) shall be UL listed and shall bear a UL label.

D. The secondary distribution section shall be labeled as suitable for use as service equipment unless the One Line Diagram defines the primary loop switches or primary transformer disconnect switch as the service equipment.

1.5 SUBMITTALS

A. Submit for approval the following shop drawings and product literature. Shop drawings shall contain title blocks identifying the University's project name and the University's full project number. Submittals shall be marked to indicate the specific models, sizes, types and options being provided. Submittals not so marked will be rejected.

1. Dimensioned substation plan and elevations with dimensions of the installation clearances, working clearances, conduit entry points, and base mounting points. Identify the substation front and the shipping sections.

2. Size, weight, and movement restrictions for shipping sections. Affirm that shipping sections meet noted building size and movement restrictions.
3. One line diagram including normal and fault ratings, phase rotations, and major component locations.
4. Bill of material with Manufacturers' names and model numbers for major components.
5. Enclosure details including paint color.
6. Primary switch section submittals including:
    a. Dimensioned plan and elevations with bus and switch dimensions, switch handle dimensions, and phase and ground bus terminal locations and barriers.
    b. One line diagram with bus, switch and fuse ratings, and interlock provisions.
    c. Compartment details including front door and rear panel descriptions, sheet metal gauge, and painting details.
    d. Terminal locations and details for phase and ground connections.
    e. Phase-to-phase clearances and phase-to-ground clearances.
    f. Bus bar details, connection methods, and materials.
    g. Insulator and barrier details and materials.
    h. Fuse and fuse holder descriptions.
    i. Fuse time-current characteristic curves.
    j. Nameplate engraving.
7. Transformer section submittals including:
    a. Dimensioned plan and elevations with tap, control power transformer, temperature monitor, fan and control power connection point locations, and phase, neutral and ground connection locations.
    b. Enclosure details including removable panel descriptions, louver locations, control wiring routing, sheet metal gauge, and painting details.
    c. Terminal locations and details for phase, neutral, and ground connections.
    d. Coil conductor materials and construction.
    e. Insulation materials.
    f. Test data sheets for similar transformers with test data on load losses, no-load losses, and sound level.
    g. Temperature control system description, including details on the control power transformer, fans, temperature monitor, temperature alarms, hinged panel for the monitor, and control power connection points.
    h. Schematic and connection diagrams for the temperature control system.
    i. Full size copy of the nameplate.
    j. Coil-to-bus/line connection materials, supports, and details.
    k. Bus bar and line termination connection and support details.
8. Secondary voltage distribution section submittals containing:
    a. Dimensioned plan and elevations with circuit breaker, control power transformer, and metering device locations, and phase, neutral, and ground bus terminal locations.
    b. One line diagram with bus, circuit breaker, trip unit, metering device and fuse quantities and ratings, and interlock provisions.

c. Compartment details including front door and rear panel descriptions, sheet metal gauge, painting details, mimic bus details, and breaker lifting device description.
d. Terminal locations and details for phase, neutral, and ground connections.
e. Phase-to-phase clearances and phase-to-ground clearances.
f. Bus bar connection and support details and bus materials.
g. Insulator and barrier details and materials.
h. Circuit breaker, trip unit, and current sensor descriptions.
i. Trip unit time-current characteristic curves.
j. Secondary metering description, including details on the current transformers, potential transformers, ammeter, voltmeter, watt-hour meter, and meter switches.
k. Schematic and connection diagrams for the secondary metering systems.
l. Nameplate engraving.

B. Prior to acceptance of the substation by the University, submit for approval, copies of installation, operation, and maintenance manuals for the following equipment:

1. Primary switches.
2. Primary fuses.
3. Transformer.
4. Transformer temperature monitor, fans, and alarms.
5. Circuit breakers and breaker lifting device.
6. Circuit breaker trip units.
7. Control power transformer.
8. Electrical metering devices.

1.6 SHIPPING, HANDLING, AND STORAGE

A. Protect the substation from weather and moisture condensation at all times.

B. Provide temporary electric heaters in the transformer in accordance with Manufacturer’s instructions until the substation is energized.

C. Notify the University and University's installing Contractor (to be named) at least 3 working days in advance of delivery.

D. Arrange for delivery of the substation at the noted site. The University's installing Contractor will unload, move, and install the unit substation under Manufacturer's direction.

E. The transformer shall be constructed so it can be broken down in the field, if necessary, so it can be lowered through the access hatch, which measures _____ x _____ clear.

F. The Manufacturer shall provide field service technicians, who will supervise the breakdown of the transformer, i.e. removing the enclosure and the secondary bus from the transformer assembly.

G. The same technicians shall supervise the reassembly of the transformer at the final installation site.

H. Ensure that all necessary extra bracing and tools required are in place, so, if necessary, the primary switches and secondary sections can be transported within the building, with their rear panel located at the bottom of transporting assembly.

I. MANUFACTURER WARRANTIES OR CERTIFICATIONS SHALL NOT BE VOIDED BY THE DISASSEMBLY AND REASSEMBLY OF THE TRANSFORMER AND SWITCHGEAR SECTIONS.

1.7 EXTRA MATERIALS

A. Deliver to the Owner the following extra materials matching the products installed, packaged with protective covering for storage, and identified with labels clearly describing the contents.

1. Spare Fuses: Provide _____for each size of:
   a. Fused primary switch power fuses.
   b. Potential circuit fuses.
   c. Control power fuses.
2. Spare Indicating Lights/Lenses: Six of each type installed.
3. Spare Kirk Keys: Two for each Kirk Key interlock.
4. Touch Up Paint: Three half pint containers or three spray cans of paint matching enclosure exterior finish.
5. Contact Lubricant: One container.

1.8 QUALITY ASSURANCE

A. Perform standard industry tests on the substation prior to shipping.

B. Provide copies of written test reports, signed and dated, for all factory and prototype tests.

C. Provide a product certification, signed and dated by the substation Manufacturer, certifying that the substation complies with the specifications except as approved by the University in writing.

1.9 WARRANTY

A. Guarantee work (parts and labor) for a period of one year from the date of the Owner's final acceptance of the project, Substantial Completion. A manufacturer's warranty beginning upon equipment receipt or startup shall be extended to one year from final project acceptance. A manufacturer's warranty in excess of one year shall remain in effect for its entire time period.

1. Refer to Specification Section 011400 "Work Restrictions" for the Substantial Completion date.

PART 2 - PRODUCTS

2.1 UNIT SUBSTATION ASSEMBLY

A. The following unit assemblers are approved when they use the components specified elsewhere in this specification:

1. ABB (ASEA Brown Boveri)
2. Eaton
3. Siemens
4. Square D

B. The listing of specific assemblers does not imply acceptance of their products that do not meet the specified ratings, features, and functions. Manufacturers listed are not relieved from meeting these specifications in their entirety.

C. The unit substation shall be a front and rear accessible structure suitable for indoor installation, consisting of primary section(s), transformer section(s), and secondary voltage distribution section(s).

1. The sections shall be constructed to allow for straightforward field assembly into a single structure.
2. The sections shall be constructed of steel frames and heavy gauge steel panels sized to maintain required alignments and clearances at all times. The sections shall also be sufficiently rigid to restrict deformation from external forces and weights that may be applied during maintenance activities.
3. The sections shall be capable of withstanding the lifting, skidding, jacking or rolling (in any direction) actions needed to install the equipment. Factory-installed lifting eyes shall be provided on each section.
4. The assembly shall have provisions for anchoring to steel leveling channels embedded in a concrete housekeeping pad.

D. The substation shall be a front-aligned structure. Any variations in section depth shall be reflected on the rear side of the substation.

E. The overall length of the assembly (HV switches, transformer section and secondary voltage distribution section) shall not exceed _____ feet.

F. Buses and terminations shall be:

1. Phased X-Y-Z (or A-B-C) from top to bottom, front to back, and left to right when viewed from the front.
2. Bus bars, flexible connectors, jumpers, and terminations shall be copper.
3. Bus bars, flexible connectors, jumpers, and terminations (except transformer winding terminals) shall be silver-plated before final assembly and shall be connected using two bolts minimum at each bus joint and insulator. Bolted connections shall use hex head bolts and split lock washers made of stainless steel or Grade 5 steel with clear zinc finish.
    a. The NEMA specified minimum current-carrying cross sectional area of the bus shall not be compromised by the holes needed to make bus connections.
    b. The overlap on bus connections shall be sufficient to ensure at least one bolt diameter distance from edge of bolt hole to edge of bus.

G. Phase-to-phase and phase-to-ground clearances within the substation shall reflect the specified BIL ratings.

H. Primary (medium voltage) insulators shall be porcelain or cycloaliphatic epoxy, sized to withstand the noted BIL and fault currents. When sizing the insulators, assume full load conditions and an ambient temperature of up to 40 degrees Celsius. The supports shall provide ANSI minimum creep distances between phases and ground.

I. Secondary (low voltage) insulators shall be porcelain, cycloaliphatic epoxy, or of high strength, moisture, track, and fire resistant glass polyester. Insulators shall be sized to withstand the noted BIL and fault currents, and rated for the maximum temperatures that would occur under design load and fault current conditions and an ambient temperature of up to 40 degrees Celsius.

J. Where glass polyester insulators are used, the cut edges shall be sealed to prevent moisture absorption.

K. Barriers shall be provided to enclose openings where electrical connections pass from one section to another.

L. Ventilation louvers shall be provided to dissipate the heat generated within each section. The louvers shall be located and guarded to minimize accidental contact with live parts.

M. The sections shall be painted with Manufacturer’s standard gray finish that meets the applicable standards of UL and ANSI.

N. The unit substation shall include a continuous 1/4” by 2”, hard-drawn copper ground bus bar extending the full length across the entire unit substation bottom. In each section,(primary switch, transformer, and secondary distribution), the ground bus bar shall include a Burndy HyGround compression grounding lug suitable for a #4/0 AWG equipment grounding conductor. The ground bus bar shall be drilled and tapped at regular intervals for feeder and branch circuit grounding conductor terminals.

O. The substation shall include engraved metal or laminated plastic nameplates on the front of each section indicating ratings of equipment and Manufacturer's shop order number for the equipment. The nameplates shall consist of black letters at least 1/4-inch high on a white background. The nameplates shall be affixed with machine screws.

P. The substation shall include 1/2-inch wide minimum red acrylic mimic bus affixed with machine screws. The mimic bus shall indicate switches, transformers, circuit breakers, fuses, SPD units, terminations, fire pump tap, and similar devices.

Q. All lugs within the substation shall be of the long barrel, two-hole compression type. Mechanical lugs shall not be accepted.

2.2 PRIMARY SWITCH SECTION(S)

A. Subject to compliance with these specifications, provide products from the following Manufacturers:

1. Eaton
2. Powercon
3. Square D

B. Each primary switch section shall consist of two metal enclosed, non-fused, load break, primary loop switches as shown on the drawings, and a metal enclosed, fused, load-break, transformer disconnect switch.

C. Ratings

1. Design Voltage: 15 kV, suitable for use on a 13.2 kV grounded system.

2. Continuous Current and Interrupting Current: 600 amperes rms.
3. Momentary Short Circuit Current and Fault Closing Current: 61,000 amperes asymmetrical at the system voltage, with system impedance X/R ratio of 15.
4. Short Time (2 second) Current: 38,000 amperes symmetrical.
5. Basic Impulse Level: 95 kV.
6. Fuse Interrupting Capacity: 50,000 amperes symmetrical at the system voltage with a system impedance X/R ratio of 15.

D. Bus and Compartment Requirements

1. The phase bus bars shall be routed across the top of the compartments to eliminate unnecessary transition sections.
2. The loop switches shall be arranged for top or bottom entry of the primary cables.
3. The primary cable terminations shall be located on bus 'run-backs', near the vertical center of the compartments. A minimum of 30" of straight space shall exist above and below the terminations to facilitate installation of stress cones and to prevent bending of the primary cables to less than the minimum cable bend radius.
4. Provide side to side insulated cable supports above and below the 'run back' bus and connection points to relieve strain on the cable terminations.
5. Two-hole, long barrel, compression type lug terminals shall be provided in each loop switch to accept single conductor, 350 kcmil, copper, shielded cable with 15 kV, 133 percent EPR insulation.
6. The fused switch shall be cable-connected to the transformer section. Provide two-hole, long barrel, compression type lugs in the fused switch to accept the transformer primary connections.
7. The switch compartments shall be NEMA 1 rated.
8. The switch compartments shall contain hinged front doors for access to the switches and/or fuses, interlocked with the switch handles, and secured by three point latches. The hinges shall be concealed. The doors shall open a minimum of 90 degrees and be provided with door stays to prop the door open at 90 degrees. The latch handles shall include provisions for padlocking in the closed position.
9. The switches shall be provided with hinged rear doors for access to the rear cable termination areas. Rear doors shall be secured to the compartment frames with hex head machine screws and be provided with door stays to prop the door open at 90 degrees.
10. Provide heavy-duty grounding bails for all switches to accommodate portable grounding equipment.
11. In the loop switches, provide solid full height and width insulating barriers between the incoming cables section of the switch in the rear, and the energized switch and bus components toward the front portion of the switch. The primary cable terminations shall be the only energized components exposed to the rear of the compartments.

12. In the fused switch, provide a solid full height and width insulating barrier between the energized switch and bus components toward the front portion of the switch and a storage compartment in the rear of the fused switch. Provide a storage rack sized for storing 3 spare fuses in their original cartons inside the fused switch rear door.
13. The bus shall be insulated or totally enclosed by barriers, and shall not be accessible normally from either the front or the rear of the switch.
14. Provide an 8" x 16" minimum high-impact viewing window on the front door of each switch that permits full viewing of the position of all three switch blades. The window shall be affixed with metal through-bolts or brackets, and shall not be more than 62" above the finished floor.

15. Provide a viewing window on the rear door of each loop switch to allow viewing of fault indicators on primary cables (fault indicators provided by Owner). The window shall be affixed approximately 18" above the bus run backs if the cable is top entry or 18" below if the cable is bottom entry.
16. Provide a hinged grounded metal barrier bolted closed in front of every switch to prevent inadvertent contact with any live part, yet allow for a full-view inspection on the switch blade position.
17. Provide green OPEN and red CLOSED switch position indicators with the words "Open" and "Closed".
18. The primary switch shall be removable as a complete operational component.

E. Load Break Switches

1. The switches shall be fused or non-fused as shown on the drawings, gang operated, 3-pole, and 2-position.
2. The switches shall be bottom hinged.
3. In the fused switch, the fuses shall be de-energized when the switch is open. With the loop switches, it is realized that the blade may in some cases be energized even in the open position.
4. Switch blade materials shall be copper.
5. The switch mechanisms shall be quick make, quick break, and stored-energy type, providing quick operation independent of handle speed.
6. The switch mechanisms shall be direct coupled. Chain or cable drives are not acceptable, except if supplied as a complete unit (switch, operator, and enclosure) from Powercon ONLY.
7. Glass polyester phase barriers shall be provided for the full length of the switches and fuses for each pole. The barriers shall be easily removable, and shall allow for visual inspection of the switches and fuses with the barriers in place.
8. The switches and operators shall be rigidly supported entirely from the interior framework of the compartments.
9. The external manual operating handles shall include lock open and lock closed padlocking provisions for multiple padlocks. The handles shall not project more than 6 inches in front of the substation when the switches are in the open or closed position.
10. The fuses shall be located for easy removal and replacement from the front.

11. The fuses shall be separated from the switch and bus components by the minimum clearances specified by the fuse Manufacturer.
12. Mechanical interlocks shall prevent the opening of the compartment doors unless the switches are open, and to prevent the closing of the switches if the compartment doors are open.
13. Provide switch handle position switches within the front section of each switch for remote indication. Wire the position switches to a terminal block in the rear section of the switch and from there to the control cubicle.
14. A Kirk Key interlock shall prevent the opening or closing of the fused switch unless the secondary main breaker is open. The interlock shall be arranged so that the same key required for fused switch operation is held captive at the secondary main breaker unless the breaker is in the open position.

F. Primary Fuses

1. Primary fuses shall be of the current limiting type.
2. Fuses shall be Mersen (formerly Ferraz Shawmut) Type CL-14, GE Type EJO-1, or Eaton Type 15CLE.
3. The substation manufacturer shall provide "E" rating that is consistent with the coordination of the substation main and feeder circuit breakers as well as utility and fire pump disconnects, that the momentary and interrupting ratings of the substation are within acceptable limits, and that the fuses will operate within the damage curve of the supplied transformer.
4. U-M Primary Systems Engineer and Engineer-of-Record shall agree on rating or work with manufacturer to propose an alternate rating after review of the coordination study.
5. Provide a metal or laminated plastic nameplate on the front door of the fused switch indicating the fuse type, fuse rating, and the identification number of the time-current curve.

2.3 TRANSFORMER SECTION(S)

A. Subject to compliance with these specifications, and the special shipping and installation requirements noted in Part 1 of these Specifications, provide products from the following Manufacturers:

1. ABB (ASEA Brown Boveri)
2. Eaton
3. MGM
4. Olsun
5. Siemens
6. Square D

B. Each transformer section shall consist of a dry-type transformer with fans, temperature controls, and any transitions required to connect to the substation primary and secondary sections.

C. Ratings

1. Type: Air self-cooled and fan cooled, ventilated, dry-type.
   a. Capacity: ____/____/____ kVA, AA/AA/FA.
   b. Phase: 3.
   c. Frequency: 60 Hertz.
   d. Primary Voltage: 13.2 kV, delta connected.

e. Secondary Voltage: ____/____ volts, 4 wire, wye connected, solidly grounded.
f. Withstand Rating: Suitable for a maximum available primary fault of 750 mVA with a system impedance X/R ratio of 15.

2. Insulation Class: 220 degrees C.
3. Insulation Temperature Rise: 115 degrees C maximum rise above a 40 degrees C maximum ambient. The transformer shall be capable of carrying a minimum of 15 percent continuous overload without exceeding a 150 degrees C rise in a 40 degrees C maximum ambient.
4. Insulation Basic Impulse Level:
   a. 95 kV BIL on the 13.2 kV primary
   b. 10 kV BIL on the secondary
5. Impedance: 5.75 percent (from 5.32 to 6.18 percent) on the base rating of the transformer.
6. Efficiency: In accordance with Federal requirements for energy efficient transformers contained in 10 CFR Part 431.
7. Sound level: 3 dBA below NEMA standard when tested in accordance with NEMA TR-1.
8. Harmonic Rating: None.

D. Core Requirements

1. The core shall be constructed with three or four legs.
2. The core shall consist of high grade, grain oriented, non-aging, high permeability silicon steel laminations with progressively stepped, rigidly clamped joints.
3. The core's magnetic flux density shall be well below the saturation point.
4. The core shall be grounded by use of a removable flexible ground strap between the core and ground bus.

E. Coil Requirements

1. The coils shall be copper. Inter-phase connections shall be copper.
2. The coils shall be wound with the secondary winding inside the primary winding.
3. Ventilating ducts shall provide proper cooling under all load conditions.

F. Assembly Requirements

1. The coils shall be rigidly clamped to the core to prevent movement during short circuit conditions.
2. The assembled core and coils shall be vacuum pressure impregnated (VPI) polyester, with clean insulating varnish, and then baked. Coils containing debris baked into the varnish are not acceptable.
3. The core and coils shall be mounted on vibration isolators to mechanically isolate them from the frame and enclosure for sound reasons. These isolators shall also electrically isolate the core and coils for testing purposes.

G. Taps

1. Provide five full capacity, 2.5 percent taps on the primary winding, two below and two above the nominal voltage tap of 13.2 kV.

2. Jumper cables between taps shall be supported to prevent whipping during a fault.

H. Primary and Secondary Connections

1. The primary connections shall be of the flexible cable type. These primary connections shall be supported and shall pass through the primary switch/transformer barrier through smooth grommeted, insulated bushings.
2. The secondary connections shall be of the braced bus bar type, equipped with flexible straps for vibration isolation.
3. The primary connections shall accept a minimum of two-bolts and the secondary connections shall accept a minimum of four bolts.

I. Cooling Fans

1. Cooling fans shall be of the propeller type, direct drive, with 120 VAC, single phase, TEFC motors. The motor circuits shall be fused or thermally protected.
2. Power for the fans and controls shall come from a control power transformer in the secondary distribution section.
3. The transformer temperature shall be monitored and the cooling fans shall be controlled by a Qualitrol, Cimco, or Eaton TC-100 temperature monitor.
   a. The temperature monitor shall be rated 120 volts and mounted flush on the front of the transformer, approximately 54" above the finished floor.
   b. The temperature monitor shall be mounted on a hinged front plate of a flush mounted box. The electrical connections shall be accessible and the monitor shall be removable without de-energizing the transformer.
   c. Wiring to the temperature monitor shall be routed and supported independently of the transformer enclosure so that enclosure panels can be removed without affecting the wiring.
   d. The temperature monitor shall include three hot spot temperature sensors, one for each transformer phase.
   e. The temperature monitor shall start the fans at a temperature of 100 degrees C. It shall initiate an audible alarm, close an “alarm” contact and illuminate a red alarm LED at 135 degrees C. It shall close a breaker “trip” contact and illuminate a second red alarm LED at 175 degrees C. The temperature set points shall be adjustable. The contacts shall be Form C and wired out to a terminal strip inside the temperature monitor box and are to be left for future use.
   f. The temperature monitor shall include an LED or LCD display to allow reading of the hot spot temperature in each phase, and the highest temperature seen on each phase since the last reset. A reset button shall be provided to reset the maximum readings.
   g. The temperature monitor shall include LED’s indicating "power on" and "fans running".
   h. The temperature monitor shall include an RS-485 data port for future connection to a remote monitor.
   i. The temperature monitor shall include a Hand - Auto control switch connected in parallel with the temperature monitor fan control contacts.

j. Power for the temperature monitor shall come from the control power transformer located within the secondary section.
k. Provide sufficient wire coiled up to extend between the temperature monitor and the control power transformer.

J. A metal nameplate conforming to NEMA standards shall be mounted on the front of the transformer.

2.4 SECONDARY VOLTAGE DISTRIBUTION SECTION

A. Subject to compliance with these specifications, provide products from the following Manufacturers:

1. ABB (ASEA Brown Boveri)
2. Eaton
3. Siemens
4. Square D

B. Single-ended unit substation secondary distribution section shall consist of two or more metal enclosed vertical stacks housing a main circuit breaker, feeder circuit breakers and circuit breaker spaces (as shown on the drawings), a control power transformer, a secondary metering compartment including CTs and PTs, and accessories.

C. Double-ended unit substation secondary distribution section shall consist of four or more metal enclosed vertical stacks housing two main circuit breakers, tie circuit breakers, feeder circuit breakers and circuit breaker spaces (as shown on the drawings), circuit breaker controls, two control power transformers with transfer switch, two secondary metering compartments including CTs and PTs, and accessories.

D. If required, provide a fire pump bus tap vertical section between the transformer section and secondary main breaker section. The fire pump tap section shall be completely barriered from the transformer and secondary sections and shall not contain any equipment except metering CTs and PTs. The CTs shall be located ahead of the fire pump bus tap. The section shall comply with all requirements of NEC Articles 230 and 695.

E. Ratings

1. Voltage: ____/____ volts, 4-wire, wye connected.
2. Current: _____ amps.
3. Phase: 3.
4. Frequency: 60 Hertz.
5. Insulation Basic Impulse Level: 10 kV BIL.
6. Bus Bracing: The assembly shall be rated to withstand mechanical forces exerted during short-circuit conditions when connected directly to a power source having available fault current ____,____ amperes symmetrical at rated voltage. The bus system shall have a minimum ANSI 4-cycle short-circuit withstand rating of 100,000 amperes symmetrical. Circuit breakers shall have a minimum symmetrical interrupting capacity of ____, ____ amperes.
8. To ensure a fully selective system, circuit breakers shall have 30 cycle short-time withstand ratings equal to their symmetrical interrupting ratings as follows regardless of whether equipped with instantaneous trip protection or not:

a. For 800-2000 AF frame size, short time rating shall equal symmetrical rating up through 65,000 amperes.
b. For 3200 AF frame size, short time rating shall equal symmetrical rating up through 85,000 amperes.
c. For greater than 3200 AF frame size, short time rating shall equal symmetrical rating up through 100,000 amperes.

F. Bus and Compartment Requirements

1. Neutral bus shall be rated at 100 percent of the ampacity of the phase buses. The neutral bus shall be isolated from ground and the enclosure. The neutral bus shall be equipped with compression lugs for terminating circuit neutral conductors.
2. Blank compartments are not permitted. Spaces shall be fully bused, fitted with neutral current sensors rated to match the breaker frame sizes, and ready to accept future circuit breakers.
3. Provide a rear compartment barrier between the cable compartment and the main bus to protect against inadvertent contact with main or vertical bus bars.
4. Provide a metal barrier full height and depth between adjacent vertical structures in the cable compartment.
5. Compartments shall be arranged for top entry of the secondary cables, and shall include adequate space and support members for installing and supporting the feeder cables.
6. Circuit breaker compartments shall include hinged front doors secured by thumbscrews, three point latches, or single quarter-turn latches.
7. Enclosure shall include removable top and rear panels. The panels shall be secured to the compartment frames with hex head machine screws.

G. Circuit Breakers

1. Circuit breakers shall be individually mounted, draw out, metal enclosed, stored energy type, quick-make and quick-break air circuit breakers.
2. Tie breaker(s) shall be identical to the main breakers and shall be capable of being exchanged with either main breaker.
3. Main breaker(s) shall be electrically operated and charged. The feeder breakers shall be manually operated and charged.
4. Electrically operated breakers shall use a dedicated and removable charging motor that is included with the substation.
5. Electrically operated breakers shall be equipped with open and close push buttons and position indicating lights.
6. Breakers shall be equipped with removable arcing contacts and operation counters.
7. Breakers shall be rated for 100 percent continuous duty, with frame and trip ratings as shown on the drawings.
8. Breakers shall be capable of being manually racked into three positions; “connected”, “test”, and “disconnected”. The breaker frames shall be grounded in all positions.
9. The circuit breaker door design shall be such that the following functions may be performed without the need to open the circuit breaker door: lever circuit breaker between positions, operate manual charging system, close and open circuit breaker, examine and adjust trip unit, and read circuit breaker rating nameplate.

10. A breaker shall be tripped open and the stored energy in the breaker mechanism shall be discharged as the breaker is moved into the disconnected position.
11. Breaker compartments shall be dead-front. Shutters shall close automatically as a breaker is racked into the test or disconnected position. Control contacts shall be 'made' when breaker is in test or connected positions.
12. Breakers shall have a minimum of two spare "Form C", isolated contacts brought out to an accessible terminal strip in the compartment. The contacts shall be rated 120 volts, 10 amperes, 60 Hz.
13. Each breaker shall be equipped with three phase current sensors, neutral current sensor, and a microprocessor-based trip unit.
    a. Current sensors shall be rated to match the frame sizes of the breakers, except current sensors for breakers with trip ratings less than 50 percent of their frame sizes shall match the breaker trip ratings.
    b. Current sensors shall be rated for 100 percent continuous duty.
14. Where shown on the drawings, breakers shall be equipped with a shunt-trip device. The shunt trip device shall be a hinged armature device rated for operation at 120 volts AC. The shunt trip wiring shall be terminated on an accessible terminal strip in the breaker compartment.
15. Breakers shall be capable of being padlocked in the "open" position.
16. A Kirk Key interlock shall be provided to prevent the operation of the fused primary switch unless the main breaker is open.
17. A Kirk Key interlock shall be provided to prevent operation of the tie breaker unless one of the main breakers is open.

H. Solid State Trip Units

1. Solid-state trip units shall be provided on all secondary main and feeder breakers. Units shall be rated as indicated on the drawings. Trip units shall be true RMS sensing. Trip units shall be magnitude and time adjustable, and shall include local and remote indication of the cause of a trip.
2. Trip units shall allow adjustment without breaker trip. Using the test kit to inject a signal to test a breaker can cause the breaker to trip.
3. Trip units shall be rated for 100 percent continuous duty.
4. Trip units shall provide the following ranges and functions as a minimum:
    a. Long time (L) current settings of at least 50-100 percent of the current sensor rating, divided into seven or more steps, and time delays of at least 2-22 seconds, at 600 percent of the long time current setting, divided into seven or more steps.
    b. Short time (S) current settings of at least 250-1000 percent of the long time current setting, divided into seven or more steps, and time delays of at least 0.1-0.5 seconds, divided into seven or more steps, to include "flat response" and "I^2T response" characteristics.

c. Instantaneous (I) settings of at least 200-1000 percent of current sensor rating. The instantaneous setting shall be provided on the feeder circuit breakers only. If it is provided on the main breaker, it shall be capable of being defeated.
d. Ground fault (G) current settings of 25-100 percent of current sensor rating, with a 1200 ampere maximum, divided in seven or more steps, with ground fault time delay settings of at least 0.1-0.5 seconds, divided into five or more steps, to include "flat response" and "I^2T response" characteristics.

5. Additional functions:
   a. Trip units shall provide the ability to field-select either instantaneous, short time pick-up and delay, or both instantaneous and short time protective functions.
   b. Trip units shall provide integral metering functions including an integral keypad and back-lit graphical display capable of displaying:
      1) voltage
      2) amperage
      3) power factor
      4) frequency
      5) watts
      6) volt-amperes
      7) crest factor
      8) ampere demand
      9) watt demand
      10) voltage and current unbalance
      11) fault current levels phase-phase, phase-neutral, and phase-ground
      12) time-stamped event logs
      13) trip logs
   c. Trip units shall be equipped to provide alarms based on primary over-current, ground over-current, over ampere demand, over kW, over kW demand, over kVAR, over kVA, and phase sequence. The alarms shall have separate adjustable pick-up and delay settings.
   d. Trip units shall be equipped to provide selective alarm and breaker tripping functions based on neutral over-current, current unbalance, under/over-voltage, voltage unbalance, and under/over-frequency.
   e. Trip units shall be equipped to provide digital harmonic sampling capability through at least the 13th harmonic.
   f. The main and tie circuit breaker trip unit(s) only shall include technology to reduce arc flash incident energy during maintenance activities. This technology shall reduce the trip unit instantaneous trip value, arc flash incident level, and Personal Protection Equipment (PPE) level when enabled. This technology shall not compromise breaker phase protection even when enabled. When this technology is enabled and disabled, the recalibration of trip unit phase protection shall be accomplished without opening the circuit breaker door and exposing operators to energized parts.
      1) This technology shall reduce the arc flash incident energy during maintenance activities to a magnitude requiring PPE of Level 4 or less.

2) This technology shall be enabled via a key lock switch located on the breaker trip unit or above the breaker door. An LED shall provide confirmation of protection and shall be blue in color.

6. Trip units shall have open protocol communication features (Modbus/TCP) including remote monitoring of power metering functions, remote open/close control of electrically operated breakers via communications, remote trip unit configuration, and remote alarming based on metered values.
7. Power for operating trip units shall be obtained from within the circuit breaker assembly itself, or by a separate control circuit connected to the secondary bus ahead of the secondary main breaker. The solid-state trip units shall have non-volatile memory to maintain all settings, trip indications, and fault data during a power outage. Batteries should not be required to maintain the memory. If batteries are required, the battery shall be capable of replacement without taking the breaker out of service.

I. Circuit Breaker Controls

1. For double-ended substations, provide main and tie circuit breaker controls to automatically or manually transfer one or both secondary main buses to the opposite power source. When transferring or retransferring an energized bus to the opposite power source, the transfer shall be closed-transition. Circuit breaker tripping shall always be available, regardless of control logic.
   a. Provide an automatic-manual selector switch (43) to automatically or manually transfer one or both secondary main buses to the opposite power source.
   b. Provide a breaker trip selector switch (10).
   c. Provide a sync check relay (25).
   d. Provide main breakers and tie breaker with relays as needed for the sequence of operations specified below. PLC-based systems shall not be provided. Provide relays for main breakers on line side of breaker with current limiting fuse protection. Provide disconnect point for test purposes to simulate undervoltage conditions.
      1) Provide sensors to detect low voltage on any phase of either secondary bus. The low voltage setpoint shall be field adjustable between 80% and 100% of nominal.
      2) Provide time delays to control the timing of breaker operation. Transfer time delays shall be field adjustable between 1 and 10 seconds. Retransfer time delays shall be field adjustable between 1 second and 30 minutes. The time that the breakers may be in closed transition shall be field adjustable between 5 and 30 cycles.
      3) Provide hand-reset lockout relays to prevent closing tie breaker under lockout conditions for either automatic or manual operation.
2. Sequence of Operations
   a. Normal Conditions
      1) Main breakers (52-A and 52-B) are closed.
      2) Tie breaker (52-AB) is open.
   b. Initial Start-Up

1) Verify mode selector switch (43) is in the "MANUAL" position.
2) Verify all transfer related circuit breakers are in the fully connected position in their cells.
3) Open and close breakers (using breaker control switches) to obtain normal operating conditions (refer to normal conditions below).
4) Place mode selector switch (43) in the "AUTOMATIC" position.

c. Interlocking
1) During retransfer in automatic mode, or when gear is in manual mode, both main and tie breakers may not be closed simultaneously unless buses A and B are synchronized. Interlocking is not active with one or more of the transfer breakers in the "TEST" or "DISCONNECT" position.
2) Closing and tripping of main and tie breakers via control switch is permitted when mode selector switch (43) is in the "MANUAL" position only.

d. Lock-out
1) Overcurrent trip switch (OTS) on main and tie breakers are incorporated in the control scheme such that there will be no closure of any breaker onto a fault. The scheme cannot be defeated and is active at all times.

e. Sequence of automatic transfer operation
1) Sequence A - Normal line or any single phase voltage at main 52-A drops below the 85% nominal line voltage.
   a) Undervoltage relay (47-A) detects loss of voltage.
   b) Time delay (62-A), adjustable from 1 to 10 seconds.
   c) Main breaker 52-A opens.
   d) Tie breaker 52-AB closes.
2) Sequence B - Normal line or any single phase voltage at main 52-B drops below 85% nominal line voltage.
   a) Undervoltage relay (47-B) detects loss of voltage.
   b) Time delay (62-B), adjustable from 1 to 10 seconds.
   c) Main breaker 52-B opens.
   d) Tie breaker 52-AB closes.
3) Sequence C - Normal line or any single phase voltage at both main breakers 52-A and 52-B drop below 85% nominal line voltage.
   a) No action is taken.
4) Sequence D – Where main breaker 52-A is closed, main breaker 52-B is open, the tie breaker 52-AB is closed, line and each phase voltage at main breaker 52-B returns to 95% or more of nominal line voltage, and normal line or any single phase voltage at main 52-A drops below the 85% nominal line voltage.
   a) Undervoltage relay (47-A) detects loss of voltage.
   b) Time delay (62-A), adjustable from 1 to 10 seconds.
   c) Main breaker 52-A opens.
   d) Main breaker 52-B closes.

5) Sequence E – Where main breaker 52-A is open, main breaker 52-B is closed, the tie breaker 52-AB is closed, line and each phase voltage at main breaker 52-A returns to 95% or more of nominal line voltage, and normal line or any single phase voltage at main 52-B drops below the 85% nominal line voltage.
   a) Undervoltage relay (47-B) detects loss of voltage.
   b) Time delay (62-B), adjustable from 1 to 10 seconds.
   c) Main breaker 52-B opens.
   d) Main breaker 52-A closes.

f. Sequence of automatic (closed transition) retransfer operation
   1) Sequence F - Line and each phase voltage at main breaker 52-A returns to 95% or more of nominal line voltage (following "Sequence A" or "Sequence D" above)
      a) Undervoltage relay (47-A) detects normal voltage.
      b) Time delay (2-A), adjustable 1 to 100 seconds.
      c) Synchronization of main sources detected by sync check relay (25).
      d) Main breaker 52-A closes.
      e) Time delay (2-T), adjustable 5 to 30 cycles.
      f) Tie breaker 52-AB opens.
   2) Sequence G - Line and each phase voltage at main breaker 52-B returns to 95% or more of nominal line voltage (following "Sequence B" or "Sequence E" above)
      a) Undervoltage relay (47-B) detects normal voltage.
      b) Time delay (2-B), adjustable 1 to 100 seconds.
      c) Synchronization of main sources detected by sync check relay (25).
      d) Main breaker 52-B closes.
      e) Time delay (2-T), adjustable 5 to 30 cycles.
      f) Tie breaker 52-AB opens.

g. Manual interlock bypass operation
   1) Place mode selector switch (43) in the "MANUAL" position.
   2) Place breaker manual trip selector switch (10) in the "MAIN A", "MAIN B", or "TIE A-B" position.
   3) Open transfer breaker may be closed via breaker control switch when the remaining two transfer breakers are closed and buses A and B are synchronized.
   4) Time delay (2-T), adjustable 0.1 to 10 seconds. The breaker selected by the breaker trip selector switch (10) will open.

J. Control Power Transformer

1. Provide a control power transformer with primary and secondary fusing to supply power needed by the transformer temperature monitor, cooling fans, electrically operated breakers, and other equipment needing 120 volt control power. Place the transformer and fusing in a secondary compartment.
   a. Locate the transformers and fusing in cubicles.
   b. Connect one transformer ahead of each main breaker.
   c. Provide a control power transfer circuit that automatically transfers the control circuit from one control power transformer to the other.
2. Provide a terminal block for the wiring connecting the control power transformer to the transformer temperature monitor and cooling fans.
3. Size the control power transformer to 125 percent of the anticipated maximum load (include the load of known future equipment when sizing).
4. 208Y/120-volt substations do not need dedicated control power transformers, but the circuit shall be fused regardless.

K. Secondary Metering

1. Metering equipment shall be mounted so the top of meters (or switches) is no greater than 68 inches above bottom of switchgear.
2. Instrument Transformers
   a. Provide three potential transformers with a secondary voltage of 120 volts, a mechanical rating equal to the momentary rating of the circuit breakers, and an ANSI accuracy class of 0.3.
   b. Potential transformer leads shall contain current limiting fuses. The fuses shall be accessible so that they can be maintained without shutting down the substation. 208Y/120 volt substations do not need potential transformers, but shall be fused regardless.
   c. Provide three current transformers with a ratio that is equal to one-half of bus rating, a 5 ampere secondary, a service rating of 2.0, and an ANSI accuracy class of 0.3 or better. The current transformers shall be sized to carry, at rated accuracy, 133 percent of the burden of all equipment connected to them. The minimum burden rating shall be B0.5 (12.5 VA). Current transformers shall be capable of sustained primary current levels of 200 percent of nameplate rating.
   d. Locate the current transformers before the main breaker to include measurement of fire pump tap current. Locate shorting terminal blocks adjacent to their current transformers.
      1) Current transformers shall be installed so that their nameplates are readable.
      2) Current transformer secondary leads shall first be connected to conveniently accessible shorting terminal blocks located adjacent to the CTs before connecting to any other devices. Shorting screws with provisions for storage shall be provided. A second set of similar shorting terminal blocks shall be provided in the control compartment.
3. Ammeter and Voltmeter

a. The meters shall be 4.5 inch diameter or 6 inch square, flush or semi-flush, with 1 percent accuracy, anti-parallax 250 degree scales, and external zero adjustment.
b. The ammeter shall have a maximum reading equal to twice the rating of the current transformers and the full scale reading shall be equal to 10 Amps.
c. The voltmeter shall have a maximum reading of 240-volts on a 208-volt secondary, or 600-volts on a 480-volt secondary.

4. Instrument Switches
   a. Instrument switches shall be of the rotary type with an "off" position between each “phase” position.
   b. The voltmeter switch shall permit the reading of all phase-to-phase and phase-to-neutral voltages.
   c. The ammeter switch shall permit the reading of all phase currents, and shall maintain current transformer secondary circuits closed at all times. It shall be rated for at least 10 amps.
   d. The switches shall be mounted under their associated meter, and they shall include appropriate escutcheon plates.
5. Kilowatt-Hour Meter:
   a. The kilowatt-hour meter shall be a transformer rated (minimum Class 10) polyphase electronic meter, ION8650 series as manufactured by Schneider Electric, complete with kWh energy and kW demand monitoring, drawout case, Ethernet port (10/100Base-T), RS-485 port, infrared port, 4 digital outputs, 3 digital inputs, 32MB memory, password protected; Schneider Electric catalog #S8650C4C0H6E1B0A.
6. Kilowatt-Hour Sub-Meter:
   a. Provide kilowatt-hour sub-meters for individual feeder breakers as shown on the drawings.
      1) Kilowatt-hour sub-meters shall be the same as the main kilowatt-hour meter. Ammeters, voltmeters and instrument switches are not required.
      2) Voltage signals shall be obtained from the main potential transformers.
      3) Current signals shall be obtained from separate current transformers located at the feeder cable connections. Provide three current transformers with a ratio equal to one-half the feeder breaker frame size, a 5 ampere secondary, a service rating of 2.0, an ANSI accuracy class of 0.3 or better, and a minimum burden rating of B0.5.
      4) Current transformer secondary leads shall first be connected to conveniently accessible shorting terminal blocks located adjacent to the CTs before connecting to any other devices. Shorting screws with provisions for storage shall be provided.
   b. Sub-meters shall be mounted adjacent to the main kilowatt-hour meter or in a remote panel suitable for Contractor mounting on a wall 60” above the finished floor.
7. Provide small wiring, fuse blocks and terminal blocks within the switchgear as required. Control components mounted within the assembly shall be suitably marked for identification corresponding to the appropriate designations on Manufacturer’s wiring diagrams.

8. Provide front access to all circuit breaker secondary connection points for ease of trouble shooting and connection to external field connections without the need of removing the circuit breaker for access.
9. Provide a front or rear accessible, isolated vertical wireway for routing of factory and field wiring. Wireway covers shall be secured by thumbscrews, three point latches or single quarter-turn latches. Factory provisions shall be made for securing field wiring without the need for adhesive wire anchors.
10. All control wire shall be Type SIS. Wire bundles shall be secured with nylon ties and anchored to the assembly with the use of pre-punched wire lances or nylon non-adhesive anchors. Adhesive anchors shall not be used.
11. Control wires leaving the switchgear shall be provided with terminal blocks with suitable numbering strips and provisions for #10 AWG field connections. Each control wire shall be marked with its origin zone, wire name, and destination zone over the entire length of the wire using a UV-cured ink process.
12. Provide wire markers at each end of all control wiring. Plug-in terminal blocks shall be provided for all shipping split wires. Terminal connections to remote devices or sources shall be front accessible via doors above each circuit breaker or a wire trough in the cable compartment.

L. Engraved laminated plastic nameplates shall be provided for breakers, the metering compartment, meters, instrument switches, fuse blocks, control power transformer, PT's, and CT's. Leave adequate space above kWh meters to permit the removal of the covers.

M. The following accessories shall be provided:

1. A top mounted, manually operated, breaker-lifting device including mounting rails.
2. For NEMA 3R rated exterior unit substations with non walk-in enclosure, a portable breaker lifting device capable of working from the floor between any nearby obstructions and housekeeping pads.
3. Circuit breaker test plug and cable(s) as needed to test the breakers.
4. Meter test plug.
5. Circuit breaker trip unit test device.

PART 3 - EXECUTION

3.1 INSTALLATION

A. Installation and final testing of this unit substation shall be done under a separate contract, by the installing Contractor.

B. All necessary hardware to secure the assembly in place shall be provided by the installing Contractor.

C. The installing Contractor shall install all equipment per the Manufacturer’s recommendations and the contract drawings.

D. Install all equipment per the Manufacturer’s recommendations and per contract drawings.

E. Provide a 4-inch thick minimum concrete housekeeping pad with 1" chamfered edge for the substation. Size and shape the pad in accordance with the approved substation shop drawings. Pad shall not extend more than four inches beyond the substation footprint. Pad shall be level to within 1/8 inch per three feet or in accordance with Manufacturer's recommendations.

F. Anchor the unit substation to the concrete housekeeping pad using concrete anchors.

G. Install fuses and set the temperature monitor, and circuit breaker trip units in accordance with the short circuit and coordination studies, the Owner's directions, and the Manufacturer's instructions.

H. Provide temporary heaters in accordance with the Manufacturer's instructions until the substation is energized.

I. The substation sections shall be installed and checked in accordance with the Manufacturer's recommendations. This shall include, but not be limited to:

1. Checking to ensure that the pad location is level to within 1/8 inch per three feet of distance in any direction.
2. Checking to ensure that all bus bars are torqued to the Manufacturer's recommendations.
3. Assembling all shipping sections, removing all shipping braces, and connecting all shipping split mechanical and electrical connections.
4. Measuring and recording Megger readings phase-to-phase, phase-to-ground, and neutral-to-ground (four-wire systems only).
5. Inspecting and installing all circuit breakers in their proper compartments.

J. Adjust taps to deliver appropriate secondary voltage.

K. Confirm operation of circuit breakers using primary current injection method.

L. Measure primary and secondary voltages for proper tap settings.

M. Megger primary and secondary windings.

N. Assist the University's Plant High Voltage Shop and Commissioning Authority with substation testing, start-up, and commissioning activities.

O. For each kilowatt-hour meter, provide a dedicated one-inch conduit with nylon pull string from the substation to the nearest voice/data cable tray or Telecommunication Room.

P. For switch handle position switches, provide a dedicated one-inch conduit with nylon pull string from the substation to the nearest voice/data cable tray or Telecommunication Room.

3.2 FIELD QUALITY CONTROL

A. The substation's Manufacturer shall provide the services of a qualified factory-trained Manufacturer's representative to assist the installing Contractor in the installation and start-up of the equipment specified under this section for a period of two working days.

B. The substation's Manufacturer shall provide to the Owner a line item cost for each additional day of the factory-trained Manufacturer's representative services that may be required, for up to a total of seven days.

C. The Manufacturer's Representative shall provide technical direction and assistance to the contractor in general assembly of the equipment, connections, and adjustments. The Manufacturer's Representative shall provide testing of the assembly and components.

D. The Manufacturer shall provide to the installing contractor three copies of the Manufacturer's field start-up report and written certification that the equipment has been installed and assembled per Manufacturer's direction and is approved for energization.

E. Provide the visual inspections, manual operations, and tests on systems and equipment described below. Tests shall be performed and documented by an independent testing agency.

F. Provide written test reports, signed and dated, for all tests prior to acceptance of the unit substation by the Owner. Test reports on Megger (insulation resistance), dielectric absorption, high potential and ducter (contact resistance) tests shall include the ambient temperature and relative humidity existing at the time of the tests.

G. Prior to any testing, perform visual inspections to verify the following:

1. The equipment is completely and properly installed.
2. The equipment is free from damage and defects.
3. Shipping blocks and restraints have been removed.
4. Electrical terminations have been properly tightened.
5. The equipment has been properly aligned.
6. The equipment has been properly lubricated.
7. The ventilation louvers are open and unobstructed.
8. The equipment is ready to be tested.

H. Prior to any testing, exercise mechanical devices to verify they operate properly and freely.

I. Prior to any testing, verify that all circuit breaker trip units are set in accordance with the approved short circuit and coordination studies.

J. Perform a continuity check, 2,500-volt DC Megger test, and a DC high potential test on primary switches. DC high potential tests shall be performed at 37kV on new and existing primary switches.

K. Perform a DC Megger test and a turns-ratio test on unit substation transformers. The DC Megger test shall be performed at 2,500 volts on coils rated over 600 volts, and at 1,000 volts on coils rated 600 volts and below. The turns-ratio test shall be performed on each tap.

L. Verify proper setting and operation of the fan control panel to ensure it and the fans are operable and functional. Temperature-test the probes in each winding.

M. Perform a continuity check and 1,000 volt DC Megger test on the secondary switchgear buses and on the main and feeder breakers.

N. Perform a primary current injection test and a ducter (contact resistance) test on all breakers.

O. Perform a 1,000-volt DC Megger test and a turns-ratio test on CT's and PT's.

P. Calibrate the metering.

3.3 COMMISSIONING

A. Perform Commissioning activities per Related Sections above.

3.4 TRAINING

A. Provide a qualified service technician from the Manufacturer's staff to conduct two training sessions.

B. A Manufacturer's qualified representative shall conduct two training sessions. **These services have been purchased under the substation's pre-purchase agreement, by the University.**

C. The installing Contractor shall arrange and coordinate the two training sessions, for up to fifteen Owner's Representatives. Each session shall last four hours and shall be conducted during normal workdays at a jobsite location determined by the owner. These training sessions shall take place two to four weeks AFTER the start-up of the new substation.

D. Coordinate the training session topic(s) with the Owner’s Representatives a minimum of two weeks prior to the session. Training topics may include basic substation maintenance and operation or may include detailed training on any of the substation components.

END OF SECTION 261100

UNIVERSITY OF MICHIGAN
ARCHITECTURE, ENGINEERING AND CONSTRUCTION

ARCHITECTURE & ENGINEERING
326 East Hoover, Mail Stop B
Ann Arbor, MI 48109-1002
Phone: 734-764-3414
Fax: 734-936-3334

BuildingName
The Description of the Project
P00000000 0000

SPECIFICATION DIVISION 26

NUMBER SECTION DESCRIPTION

DIVISION 26 ELECTRICAL
SECTION 261102 - INSTALLATION OF PRE-PURCHASED UNIT SUBSTATIONS

END OF CONTENTS TABLE

DIVISION 26 ELECTRICAL
SECTION 261102 - INSTALLATION OF PRE-PURCHASED UNIT SUBSTATIONS

PART 1 - GENERAL

1.1 SUMMARY

A. The University of Michigan will pre-purchase an indoor, metal-clad, unit substation assembly consisting of primary voltage switch, transformer, and secondary voltage switchgear sections. The unit substation assembly shall be received, handled and properly stored, as needed and installed, tested and activated by this Contractor.

1.2 RELATED SECTIONS

A. The drawings and the general provisions of the contract, including the current edition of the University of Michigan Standard General Conditions, apply to this section.

B. The applicable requirements of the Division 1 and other Division 26 specification sections apply to this section.

PART 2 - PRODUCTS

2.1 INSTALLATION HARDWARE

A. All necessary hardware to secure the assembly in place shall be provided by the installing Contractor.

PART 3 - EXECUTION

3.1 FIELD QUALITY CONTROL

A. The substation's Manufacturer is providing the services of a qualified factory-trained Manufacturer's representative to assist the installing Contractor in the installation and start-up of the equipment specified under this section for a period of two (2) working days.

B. The substation's Manufacturer has provided to the Owner a line item cost for each additional day of the factory-trained Manufacturer's representative services that may be required, for up to a total of seven (7) days.

C. The Manufacturer's representative shall provide technical direction and assistance to the contractor in general assembly of the equipment, connections and adjustments, and testing of the assembly and components contained herein.

D. The installing Contractor shall provide three (3) copies of the Manufacturer's field start-up report.

3.2 INSTALLATION

A. Accept delivery of new unit substation and, if necessary, store unit in a heated, secure building.

B. Co-ordinate with the Owner's Representative for an independent inspection of the delivered substation assemblies. The University will hire and pay an independent agency to inspect the delivered substation sections and to verify that all specifications and drawing requirement of the pre-purchase package have been met.

C. The same independent agency will perform the overall commissioning of the installed substation and all their services will be paid by the University. The installing contractor shall coordinate and facilitate the commissioning tasks.

EDIT AND/OR REMOVE PARAGRAPH, IF BREAK-DOWN IS NOT REQUIRED IN A PARTICULAR PROJECT.

D. Under the direction of Manufacturer's field representative, break down the unit substation's transformer by removing the enclosure and the secondary bus from the transformer assembly. This is necessary to clear the existing low clearance of _____ inches vertically inside the building.

EDIT AND/OR REMOVE PARAGRAPH IF BREAK-DOWN IS NOT REQUIRED IN YOUR PARTICULAR PROJECT.

E. The Manufacturer's field representative shall supervise the reassembly of the transformer at the final installation site.

EDIT AND/OR REMOVE PARAGRAPH IF TILTING OR LOW POINTS ARE NOT REQUIRED OR ARE NOT RELEVANT IN YOUR PARTICULAR PROJECT.

F. Ensure that all necessary extra bracing and tools required are in place, so that the primary switches and secondary sections can be transported tilted as necessary, so they can pass under the low point of the travel path of _____ inches within the building.

G. Remove secondary breakers from their compartments, before transporting secondary sections to the substation room.

H. Re-install secondary breakers in their compartments, after installing secondary sections to the substation room.

EDIT AND/OR REMOVE PARAGRAPH IF THERE IS NO ROUTING DRAWING REQUIRED IN YOUR PARTICULAR PROJECT.

I. Consult Drawings regarding the proposed routing of the unit substation.

J. The Contractor shall install all equipment per the Manufacturer’s recommendations and per contract drawings.

K. Provide a 4 inch thick minimum concrete housekeeping pad for the substation. Size and shape the pad in accordance with the approved substation shop drawings. Pad shall not extend more than four (4) inches beyond the substation footprint. Pad shall include embedded steel leveling channels that are level to within 1/8 inch per three (3) feet. Leveling channels shall have a 1/8 inch reveal above the top of the concrete. The quantity, size and locations of leveling channels shall be in accordance with Manufacturer’s recommendations.

L. Anchor the unit substation to the concrete housekeeping pad using concrete anchors.

M. Install fuses, set the temperature monitor, and circuit breaker trip units in accordance with the short circuit and coordination studies, the Owner’s directions, and the Manufacturer’s instructions.

N. Provide temporary heaters in accordance with the Manufacturer's instructions until the substation is energized.

O. Arrange for testing and setting of the unit substation devices in accordance with these specifications, applicable codes and standards, and Manufacturer's instructions. The University will supply breaker settings and transformer primary fuse size.

P. The substation sections shall be installed and checked in accordance with the Manufacturer’s recommendations. This shall include but not limited to:

1. Checking to ensure that the pad location is level to within 1/8 inch per three feet of distance in any direction.
2. Checking to ensure that all bus bars are torqued to the Manufacturer’s recommendations.
3. Assembling all shipping sections, removing all shipping braces and connecting all shipping split mechanical and electrical connections.
4. Measuring and recording Megger readings phase-to-phase, phase-to-ground, and neutral-to-ground (four wire systems only).
5. Inspecting and installing all circuit breakers in their proper compartments.

Q. Adjust taps to deliver appropriate secondary voltage.

R. Confirm operation using primary current injection method.

S. Measure primary and secondary voltages for proper tap settings.

T. Megger primary and secondary windings.

U. Assist the University’s Plant High Voltage Shop and Commissioning Authority with substation testing, start-up and commissioning activities.

3.3 MANUFACTURER'S CERTIFICATION

A. A qualified factory-trained Manufacturer's representative shall certify in writing that the equipment has been installed, adjusted and tested in accordance with the Manufacturer's recommendations. **These services have been purchased under the substation's pre-purchase agreement, by the University.**

B. Provide three (3) copies of the Manufacturer's representative's certification.

3.4 TRAINING

A. A Manufacturer's qualified representative shall conduct two training sessions. **These services have been purchased under the substation's pre-purchase agreement, by the University.**

B. The installing Contractor shall arrange and coordinate the two training sessions, for up to fifteen (15) Owner's Representatives. Each session shall last 4 hours and shall be conducted during normal workdays at a jobsite location determined by the owner. These training sessions shall take place BEFORE the start-up of the new substation.

1. One training program shall be of the "start-up" type and shall include instructions on the assembly, including primary equipment, transformer, and secondary equipment. All circuit breakers, protective devices and other major components shall be included.
2. A second training program shall be focused on the maintenance of the unit substation, including primary equipment, transformer, and secondary equipment. All circuit breakers, protective devices and other major components shall be included.

3.5 PRIOR TO SHIPPING

A. Approximately 7 days prior to shipment of the unit substation components, the local representative of the manufacturer shall meet with the U-M design manager (electrical engineer), as well as other designated U-M stakeholders at the U-M A&E office complex. The purpose of the meeting will be to participate in a conference telephone call to the factories where the substation components are being assembled. The local representative shall coordinate with the factories to ensure that an authorized and qualified factory representative is available (at all sites) who will be able to discuss in detail the U-M assembly. Items such as shop drawing comments, etc. shall be discussed and verified during the telephone conference calls. Under no circumstance may the components be shipped prior to the telephone verifications.

END OF SECTION 16314

UNIVERSITY OF MICHIGAN
ARCHITECTURE, ENGINEERING AND CONSTRUCTION

ARCHITECTURE & ENGINEERING
326 East Hoover, Mail Stop B
Ann Arbor, MI 48109-1002
Phone: 734-764-3414
Fax: 734-936-3334

BuildingName
The Description of the Project
P00000000 0000

SPECIFICATION DIVISION 26

NUMBER SECTION DESCRIPTION

DIVISION 26 ELECTRICAL
SECTION 262000 - LOW VOLTAGE ELECTRICAL DISTRIBUTION

END OF CONTENTS TABLE

DIVISION 26 ELECTRICAL
SECTION 262000 - LOW VOLTAGE ELECTRICAL DISTRIBUTION

PART 1 - GENERAL

1.1 RELATED DOCUMENTS

INCLUDE PARAGRAPH 1.1.A AND B IN EVERY SPECIFICATION SECTION. EDIT RELATED SECTIONS 1.1.B TO MAKE IT PROJECT SPECIFIC.

A. Drawings and general provisions of the Contract, Standard General and Supplementary General Conditions, Division 01 Specification Sections, and other applicable Specification Sections, in particular the Related Sections listed below, apply to this Section.

VERIFY ALL RATINGS, DIMENSIONS AND REQUIREMENTS SPECIFIED TO BE AS SHOWN ON THE DRAWINGS ARE CLEARLY SHOWN ON THE DRAWINGS.

IN 1 BELOW, SELECT PROPER COMMISSIONING SPEC SECTION NUMBER APPLICABLE TO THE PROJECT.

B. Related Sections:

1. Section 019100/019110 - Commissioning
2. Section 017823 - Operation and Maintenance Manual
3. Section 260513 - Medium, Low & Control Voltage Cables
4. Section 260526 - Grounding and Bonding for Electrical
5. Section 260533 - Electrical Materials and Methods
6. Section 260800 - Electrical Acceptance Tests

PART 2 - PRODUCTS

2.1 POWER AND DISTRIBUTION PANELBOARDS - FUSIBLE SWITCH TYPE

A. Power and distribution panelboards shall be of the voltage and amperage shown, 3 phase, 4 wire, 200,000 amps AIC, dead front, fusible switch type, with main fused switch or main lugs only as shown, copper bus, fully rated neutral and ground bars, NEMA Type 1 enclosure and surface trim. Provide switches and Class R dual element fuses as shown. Eaton Pow-R-Line 4F, GE Spectra, Siemens P4 or P5, or Square D QMB.

1. Blank switch positions shall be fully bused and ready to accept future switches.
2. Bus and switch terminals shall be identified as accepting copper and aluminum cables.
3. Enclosure shall be sized to provide adequate conduit knockout space and gutter wire bending space for future conduits and cables. When aluminum feeder cables are being used, oversize the enclosure for aluminum cables. Enclosures that are too small to accommodate future conduits and cables or aluminum cables (when used) shall be replaced at the Contractor's expense.

4. Door shall have concealed hinge, flush handle, lock, with 2 keys and panel directory frame. All panel locks shall be keyed alike.

2.2 POWER AND DISTRIBUTION PANELBOARDS - CIRCUIT BREAKER TYPE

A. Power and distribution panelboards shall be of the voltage and amperage shown, 3 phase, 4 wire, 50,000 amps AIC minimum, dead front, circuit breaker type, with main circuit breaker or main lugs only as shown, copper bus, fully rated neutral and ground bars, NEMA Type 1 enclosure and surface trim. Provide circuit breakers as shown. Eaton Pow-R-Line 4B, GE Spectra, Siemens P4 or P5, or Square D I-Line.

1. Blank circuit breaker spaces shall be fully bused and ready to accept future circuit breakers.
2. Bus and circuit breaker terminals shall be identified as accepting copper and aluminum cables.
3. Enclosure shall be sized to provide adequate conduit knockout space and gutter wire bending space for future conduits and cables. When aluminum feeder cables are being used, oversize the enclosure for aluminum cables. Enclosures that are too small to accommodate future conduits and cables or aluminum cables (when used) shall be replaced at the Contractor's expense.
4. Door shall have concealed hinge, flush handle, lock with 2 keys, and panel directory frame. All panel locks shall be keyed alike.

2.3 LIGHTING AND RECEPTACLE PANELS

A. Lighting and receptacle panels shall be of the voltage, amperage and number of positions shown, 3 phase, 4 wire, 22,000 amps AIC minimum unless shown otherwise, circuit breaker type, with main circuit breaker or main lugs only as shown, copper bus, fully rated neutral and ground bars, NEMA Type 1 enclosure and surface or flush trim as shown. In main circuit breaker panels, the main circuit breaker shall be separate from and not mounted in feeder breaker positions. Load center type panels are not acceptable. Provide circuit breakers as shown. Eaton Pow-R-Line 1 or 2, GE A series, Siemens P1 or P2, or Square D NF or NQOD.

1. Bus and circuit breaker terminals shall be identified as accepting copper and aluminum cables.
2. Enclosure shall be sized to provide adequate conduit knockout space and wire bending space for future conduits and cables. When aluminum feeder cables are being used, oversize the enclosure for aluminum cables. Enclosures that are too small to accommodate future conduits and cables or aluminum cables (when used) shall be replaced at the Contractor's expense.

3. Front cover shall be factory manufactured, UL/NRTL listed, one-piece, hinged "door-in-door" type with: Interior hinged door with hand-operated latch or latches as required to provide access to circuit breaker operating handles only; not energized parts. Outer hinged door to provide access to the entire closure including the dead front and all wiring gutters. Outer door shall be kept securely closed with factory bolts, screws, clips or other fasteners to the panel box, requiring a tool for entry; hand operated latches are not acceptable. Both inner and outdoor doors shall open left to right. Include one-piece, removable, inner dead front cover, independent of the panelboard cover. Door shall have concealed hinge, flush handle, lock with 2 keys and panel directory frame. All panel locks shall be keyed alike.

2.4 CIRCUIT BREAKERS

A. Circuit breakers shall be molded case, bolt-on, quick make and quick break, thermal-magnetic type with trip indication, and shall be from the same manufacturer as the panel in which they are installed. Circuit breaker terminals shall be identified as accepting copper and aluminum cables. Eaton, GE, Siemens or Square D.

1. Circuit breakers for power and distribution panelboards shall have a minimum interrupting rating of 35,000 amps RMS at 240 volts AC or 25,000 amps RMS at 480 volts AC.
2. Circuit breakers for lighting and receptacle panelboards shall have a minimum interrupting rating of 22,000 amps RMS at 240 volts AC or 25,000 amps RMS at 480 volts AC.
3. Circuit breakers used for switching fluorescent lighting or for protecting air conditioning compressors shall be so listed.
4. Circuit breakers used for feeding electrical heat tracing shall include ground fault equipment protection rated to trip at 30 ma.

2.5 DISTRIBUTION TRANSFORMERS

A. Distribution transformers shall be 480-208Y/120 volts, of the kVA and K rating shown, dry type, with copper or aluminum windings, a 220 degrees C insulation system, and designed for a maximum temperature rise at full load of 115 degrees C above a 40 degrees C ambient. Terminals shall be identified as accepting copper and aluminum cables. Transformers shall have a sound rating 3 dB below NEMA standard (42 dB for 10-50 kVA, 47 dB for 51-150 kVA, 52 dB for 151-300 kVA and 57 dB for 301-500 kVA rated transformers), and shall be equipped with four taps, two 2-1/2 percent above and two 2-1/2 percent below nominal. Acme, Cutler Hammer/Westinghouse, GE, Hevi-Duty, MGM, Olsun, Siemens, or Square D.

2.6 FUSES

A. Fuses for general use shall be rated 250 or 600 volts as required, Class R, dual element type with a 200,000 amp AIC interrupting rating. Bussmann, Gould Shawmut or Littelfuse.

PART 3 - PART 3 EXECUTION

3.1 INSTALLATION

A. Provide No. 10 AWG wire to NEMA Type 6-20R receptacles serving freezers, window air conditioners or other large appliances.

B. Where shown on the drawings, provide a separate neutral conductor for each single-phase branch circuit. The neutrals of these single-phase circuits shall not be shared or daisy-chained.

C. Color code circuit breakers and disconnect switches of fire alarm systems and emergency circuits with red paint. Provide lock-on clips on the circuit breaker handles.

D. Provide nameplates in accordance with Section 260500.

E. Provide a detailed typed directory for all new and modified panelboards.

3.2 FIELD QUALITY CONTROL

A. Prior to any testing, perform visual inspections to verify the following:

1. The equipment is properly installed and anchored.
2. The equipment is free from damage and defects.
3. Electrical terminations have been properly tightened.
4. The ventilation louvers are open and unobstructed.
5. The equipment has been thoroughly cleaned inside and outside.
6. The equipment is properly labeled and labels are correct.
7. The equipment is ready to be tested.

B. Perform the following testing and submit a test report.

1. Verify proper phasing of power circuits.
2. Perform a 1,000-volt Megger test on buses and disconnect switches. This test may be combined with the power cable Megger test by testing the equipment and terminated cables together.
3. Perform a continuity check on control circuits and control panel internal wiring.
4. Perform an operational test on the controls and alarms.
5. Perform a continuity check and a 1,000-volt DC Megger test on 3 phase distribution and isolation transformers.

3.3 COMMISSIONING

A. Perform Commissioning activities per Related Sections above.

END OF SECTION 262000

UNIVERSITY OF MICHIGAN
ARCHITECTURE, ENGINEERING AND CONSTRUCTION

ARCHITECTURE & ENGINEERING
326 East Hoover, Mail Stop B
Ann Arbor, MI 48109-1002
Phone: 734-764-3414
Fax: 734-936-3334

BuildingName
The Description of the Project
P00000000 0000

SPECIFICATION DIVISION 26

NUMBER SECTION DESCRIPTION

DIVISION 26 ELECTRICAL
SECTION 262726 - WIRING DEVICES

END OF CONTENTS TABLE

DIVISION 26 ELECTRICAL
SECTION 262726 - WIRING DEVICES

PART 1 - GENERAL

1.1 RELATED DOCUMENTS

INCLUDE PARAGRAPH 1.1.A AND B IN EVERY SPECIFICATION SECTION. EDIT RELATED SECTIONS 1.1.B TO MAKE IT PROJECT SPECIFIC.

A. Drawings and general provisions of the Contract, Standard General and Supplementary General Conditions, Division 1 Specification Sections, and other applicable Specification Sections, in particular the Related Sections listed below, apply to this Section.

IN 2 BELOW, SELECT PROPER COMMISSIONING SPEC SECTION NUMBER APPLICABLE TO THE PROJECT.

B. Related Sections:

1. Section 017823 - Operation and Maintenance Manual
2. Section 019100/019110 - Commissioning
3. Section 260513 - Medium, Low & Control Voltage Cables
4. Section 260526 - Grounding and Bonding for Electrical
5. Section 260533 - Electrical Materials and Methods
6. Section 260800 - Electrical Acceptance Tests

1.2 SUMMARY

A. Section Includes:

1. Lighting switches and occupancy sensors.
2. Receptacles.
3. Device cover plates.
4. Receptacle strips and power poles.
5. Floor boxes and floor poke-through devices.
6. Pin and sleeve connectors.

1.3 SUBMITTALS

A. Product Data: Include manufacturers, catalog illustrations, models, rated capacities, dimensions, rough-in requirements, wiring diagrams and materials of construction. Wiring diagrams shall be project specific and differentiate between factory wiring and field wiring. Include written sequences of operation for all controls.

B. Installation, Operation, and Maintenance Manuals

1.4 QUALITY ASSURANCE

A. Manufacturers and Products: The products and manufacturers specified in this Section establish the standard of quality for the Work. Subject to compliance with all requirements, provide specified products from the manufacturers named in Part 2.

B. Reference Standards: Products in this section shall be built, tested, and installed in compliance with the specified quality assurance standards, latest editions, of all NEMA and UL standards applicable to each type of wiring device.

1.5 WARRANTY

A. Provide a complete warranty for parts and labor for a minimum of one year from the date of Substantial Completion.

PART 2 - PRODUCTS

CHANGE DEVICE COLORS WHEN NECESSARY TO MATCH EXISTING DEVICES.

2.1 TOGGLE SWITCHES

A. Toggle switches shall be rated 120/277 volts, 20-amperes, single-pole, double-pole, 3-way or 4-way as shown, heavy-duty, back and side wired, with white handles. Arrow Hart (Cooper), Bryant, Hubbell, Leviton, or Pass & Seymour.

2.2 DIMMER SWITCHES

A. Dimmer switches shall be rated for the types of lamps being controlled, 1,000 watts minimum, specification grade, heavy-duty, with white slider or knob and radio noise filter, and suitable for use in a single gang box. Leviton, Lithonia, or Lutron.

2.3 OCCUPANCY SENSORS

SHOW OCCUPANCY SENSOR TYPES, LOCATIONS AND AIMING ON PLAN DRAWINGS. PROVIDE SEPARATION BETWEEN OCCUPANCY SENSORS AND SOURCES OF AIR CURRENTS PER MANUFACTURERS INSTRUCTIONS.

A. Wall mounted occupancy sensors shall be rated 600 watts minimum, 180 degrees coverage minimum, 300 sq. ft. coverage minimum, infrared type, heavy-duty, white color, with SCR power switching devices, adjustable range or sensitivity, adjustable time delay between 5-30 minutes minimum, adjustable setting of manual or auto “on”, integral manual override switches, and suitable for mounting in single gang wall mounted boxes. Sensors with triac power switching devices are not acceptable. Cooper Controls (Eaton), Hubbell, Leviton, Lutron, Sensor Switch, Tork, or WattStopper.

B. Ceiling mounted occupancy sensors shall be rated 1,000 watts minimum, 180-360 degrees coverage as required, 1,000 sq. ft. coverage minimum, infrared type, heavy-duty, white color, with SCR power switching devices, adjustable range or sensitivity, adjustable time delay between 5-30 minutes minimum, adjustable setting of manual or auto “on”, and suitable for mounting in ceiling mounted boxes. Sensors shall utilize a low voltage power supply and control circuits, and be interlocked with the switch circuit for local control. Sensors with triac power switching devices are not acceptable. Cooper Controls (Eaton), Hubbell, Leviton, Lutron, Sensor Switch, Tork, or WattStopper.

PER PROJECT REQUIREMENTS, DELETE EITHER C OR D BELOW. DUAL TECH MICROPHONIC/PIR OCCUPANCY SENSORS ARE LESS SENSITIVITE TO AIR CURRENTS, WHILE DUAL TECH ULTRASONIC/PIR OCCUPANCY SENSORS ARE NOT SENSITIVE TO AUDIBLE SIGNALS

C. Dual technology microphonic/PIR occupancy sensors shall be rated 1,000 watts minimum, 180-360 degrees coverage as required, 1,000 sq. ft. coverage minimum, and combination microphonic/infrared type. The microphonic component shall be acoustically passive and "listen" for sounds indicating occupant motion. The overall occupancy sensor shall be heavy-duty, white color, with SCR power switching devices, adjustable range or sensitivity, adjustable time delay between 5-30 minutes minimum, adjustable setting of manual or auto "on", and suitable for mounting in ceiling or wall mounted boxes. Sensors shall utilize low voltage power supply and control circuits and be interlocked with the switch circuit for local control. Sensors with triac power switching devices are not acceptable. Sensor Switch.

D. Dual technology ultrasonic/PIR occupancy sensors shall be rated 1,000 watts minimum, 180-360 degrees coverage as required, 1,000 sq. ft. minimum coverage, and combination ultrasonic/infrared type. The ultrasonic component shall operate at 32 kHz minimum and be compatible with hearing aids. The overall occupancy sensor shall be heavy-duty, white color, with SCR power switching devices, adjustable range or sensitivity, adjustable time delay between 5-30 minutes minimum, adjustable setting of manual or auto "on", and suitable for mounting in ceiling or wall mounted boxes. Sensors shall utilize low voltage power supply and control circuits and be interlocked with the switch circuit for local control. Sensors with triac power switching devices are not acceptable. Cooper Controls (Eaton), Hubbell, Leviton, Lutron, Tork, or WattStopper.

2.4 DUPLEX RECEPTACLES

A. Duplex receptacles shall be rated 125 volts, 20 amps, 2-pole, 3-wire, NEMA Type 5-20R, heavy duty, back and side wired, grounding type with nylon or Lexan bodies. Except where shown otherwise, normal power receptacles shall have white faces, emergency power receptacles shall have red faces, and "special power" receptacles shall have gray faces. Arrow Hart (Cooper), Bryant or Hubbell 5362, or Leviton or Pass & Seymour 5362A.

2.5 GFCI AND AFCI DUPLEX RECEPTACLES

A. Ground-fault circuit interrupter (GFCI) and arc-fault circuit interrupter (AFCI) duplex receptacles shall be rated 125 volts, 20 amps, 2-pole, 3-wire straight blade type with nylon or Lexan bodies and white faces. GFCI receptacles shall comply with UL 498 and UL 943 and have a blinking light that indicates the GFCI has malfunctioned and no longer provides protection. GFCI receptacles shall trip when ground currents exceed 5 ma, and shall trip in 25 milliseconds maximum. AFCI receptacles shall recognize characteristics unique to an arcing fault and trip when an arc fault is detected. Receptacles shall have an interrupting rating of 2,000 amps and shall lock out (off) when the protection system fails. Arrow Hart (Cooper), Bryant, Hubbell, Leviton, or Pass & Seymour.

2.6 TVSS AND TAMPER-RESISTANT DUPLEX RECEPTACLES

A. TVSS and tamper-resistant duplex receptacles shall be rated 125 volts, 20 amps, 2-pole, 3-wire straight blade type with nylon or Lexan bodies and white faces. TVSS receptacles shall clamp at 330 volts or less, and shall have visual indication of the failure of their protective circuitry. Tamper-resistant receptacles shall require the simultaneous insertion of both line and neutral plug blades before power is applied to the receptacle contacts. Arrow Hart (Cooper), Bryant, Hubbell, Leviton, or Pass & Seymour.

2.7 USB CHARGER DUPLEX RECEPTACLES

A. USB charger duplex receptacles shall be rated 125 volts, 20 amps, with two 2-pole, 3-wire, tamper-resistant receptacles and two USB Type A charger ports. Receptacles shall be NEMA Type 5-20R, heavy-duty, back and side wired or pigtail wired, grounding type with nylon or Lexan bodies and white faces. USB ports shall be 5 volts DC, 3.1 amps minimum combined total, compatible with USB Type 2.0 and 3.0 devices. Arrow Hart (Cooper), Bryant, Hubbell, Leviton, or Pass & Seymour.

2.8 SPECIAL PLUGS AND RECEPTACLES

A. Special plugs and receptacles including twist-lock devices shall be of the voltage, amperage, number of poles, number of wires, configuration, and NEMA Type shown, heavy-duty, with nylon or Lexan bodies and white or gray faces. Arrow Hart (Cooper), Bryant, Hubbell, Leviton, or Pass & Semour. Provide the required quantity of mating plugs when shown on the drawings.

2.9 DEVICE COVER PLATES

A. Except where unique cover plates are required (wall box dimmers, occupancy sensors, surface raceways, etc.), cover plates for devices shall be of high quality Type 302 stainless steel unless otherwise indicated.

2.10 RECEPTACLE STRIPS

A. Surface mounted receptacle strips shall consist of white color surface wireways containing matching receptacles of the types shown. Receptacles shall be heavy duty, specification grade, and shall be grounded by a separate green ground conductor. The receptacles shall be spaced and circuited as shown.

2.11 POWER POLES

A. Power poles shall be white color painted steel unless shown otherwise, with an internal barrier to separate power wiring from telecommunications wiring. Poles shall utilize a Velcro pad at the bottom for attachment to carpeting or tile, and an adjustable T-bar assembly with trim plate for attachment to the ceiling. Receptacles shall be rated 125 volts, 20 amps, 2-pole, 3-wire, NEMA Type 5-20R, heavy-duty, white color, and shall be grounded by a separate green ground conductor. Hubbell, Steelcase, or Wiremold.

COORDINATE WITH THE ARCHITECT AND OWNER'S REPRESENTATIVE REGARDING SIZE, COVER TYPE AND FINISH. EDIT ACCORDINGLY.

2.12 FLOOR BOXES

A. Floor boxes shall be of the flush, multi-service type, UL listed for fire resistance. Boxes shall be of stamped, galvanized steel, fully adjustable, with a minimum capacity of 80 [50, 30] cubic inches, split into 2 [3] compartments of equal capacity by removable partitions. Boxes shall include polycarbonate [brass] gasketed and watertight covers with integral carpet flanges, dual locking flip lids on the power side and four concentric breakouts on the telecommunications side. FSR, Hubbell, or Wiremold.

COORDINATE WITH THE ARCHITECT AND OWNER'S REPRESENTATIVE REGARDING COVER TYPE AND FINISH.

2.13 FLOOR POKE-THROUGH DEVICES

A. Floor poke-through devices shall be of the flush type, with two duplex 20A power receptacles and two telecom outlets. Unit shall include two blank inserts for unused telecom openings and the "Communication Adapter" for connecting two 1/2" conduits to the assembly. Flange shall be of brushed brass finish. Unit shall be UL listed for fire resistance. Wiremold RC9 Series or Hubbell PT9 Series.

2.14 PIN AND SLEEVE CONNECTORS

A. Pin and sleeve connectors shall comply with IEC Standard 309. They shall consist of nylon housings with integral locking rings and cord grips that are color coded by voltage. Pins and sleeves shall be sized, arranged, and keyed to prevent incorrect assembly. Pins or sleeves shall be staggered so that the ground conductor mates first, the neutral conductor mates second, and the energized conductors mate last. Provide integral safety switch interlocks where shown. Crouse-Hinds, Hubbell, Leviton, or Pass & Seymour.

PART 3 - EXECUTION

3.1 INSTALLATION

A. Provide hospital-grade receptacles in patient care areas.

B. Except where necessary to match existing receptacles, install receptacles with their ground slots below or to the left of the line and neutral slots.

C. Provide a minimum No. 10 AWG wire to NEMA Type 6-20R receptacles serving freezers, window air conditioners, or other large appliances.

D. For each new 120 volt or 277 volt branch circuit, provide a dedicated neutral. Neutrals of branch circuits shall not be shared or daisy-chained.

E. Receptacles installed in surface raceways being fed by multiple circuits, shall have adjacent receptacles from alternate circuits.

F. Provide GFCI receptacles or GFCI-protected branch circuits for new and existing 120 volt duplex receptacles located outdoors, in garages, on rooftops, in toilet rooms, in unfinished basements, in kitchens, and within 6 feet of water sources including sinks, cup sinks, fume hood sinks, faucets, and hose bibs. Provide GFCI receptacles for water coolers and vending machines. Standard receptacles protected by an upstream GFCI receptacle or a GFCI circuit breaker are not acceptable.

G. Provide AFCI receptacles or AFCI-protected branch circuits for new and existing 120 volt duplex receptacles located in dwelling unit common rooms, dining rooms, living rooms, bedrooms, closets, hallways, and similar rooms or areas. Standard receptacles protected by an upstream AFCI receptacle are acceptable only when shown on the drawings.

H. Provide tamper-resistant receptacles for new and existing 120 volt duplex receptacles located in dwelling units, guest rooms, guest suites, and child care facilities.

I. Provide waterproof enclosures for receptacles located outdoors or when designated "waterproof" in special indoor applications. Enclosures shall remain watertight even while in use. Cantex, Carlon, Leviton, or TayMac Corporation.

J. Provide a nametag on each cover plate of new and existing light switches and receptacles identifying the panel and circuit number feeding the device. Trace the existing circuits using an electronic circuit tracer if necessary. Nametags shall consist of black text permanently laminated to adhesive backed clear nylon or Mylar tape. Brother P-Touch. Embossed plastic tape labels are not acceptable.

K. Color code junction boxes and box covers of emergency circuits with red paint.

L. Mark junction box covers in indelible ink with the panel and breaker numbers of the circuits contained within.

M. Set occupancy sensors as follows:

1. Classrooms, labs: Set for “auto on” and timer for 20-30 minutes.
2. Offices: Set for “manual on” and timer for 20-30 minutes.
3. Storage rooms, janitor closets, telecommunication rooms, copy rooms, kitchenettes: Set for “auto on” and timer for 5 minutes.
4. Toilet rooms and locker rooms: Set for “auto on” and timer for 10 minutes.
5. Corridors: Set timer for 20-30 minutes.

3.2 FIELD QUALITY CONTROL

A. Perform testing in accordance with Specification Section 260800 and submit a test report.

3.3 COMMISSIONING

A. Perform commissioning activities in accordance with Related Sections.

END OF SECTION 262726

UNIVERSITY OF MICHIGAN
ARCHITECTURE, ENGINEERING AND CONSTRUCTION

ARCHITECTURE & ENGINEERING
326 East Hoover, Mail Stop B
Ann Arbor, MI 48109-1002
Phone: 734-764-3414
Fax: 734-936-3334

BuildingName
The Description of the Project
P00000000 0000

SPECIFICATION DIVISION 26

NUMBER SECTION DESCRIPTION

DIVISION 26 ELECTRICAL
SECTION 262900 - MOTOR CONTROLS

END OF CONTENTS TABLE

DIVISION 26 ELECTRICAL
SECTION 262900 - MOTOR CONTROLS

PART 1 - GENERAL

1.1 RELATED DOCUMENTS

INCLUDE PARAGRAPH 1.1.A AND B IN EVERY SPECIFICATION SECTION. EDIT RELATED SECTIONS 1.1.B TO MAKE IT PROJECT SPECIFIC.

A. Drawings and general provisions of the Contract, Standard General and Supplementary General Conditions, Division 01 Specification Sections, and other applicable Specification Sections, in particular the Related Sections listed below, apply to this Section.

VERIFY ALL RATINGS, DIMENSIONS AND REQUIREMENTS SPECIFIED TO BE AS SHOWN ON THE DRAWINGS ARE CLEARLY SHOWN ON THE DRAWINGS.

IN 1 BELOW, SELECT PROPER COMMISSIONING SPEC SECTION NUMBER APPLICABLE TO THE PROJECT.

B. Related Sections:

1. Section 019100/019110 - Commissioning
2. Section 017823 - Operation and Maintenance Manual
3. Section 260513 - Medium, Low & Control Voltage Cables
4. Section 260526 - Grounding and Bonding for Electrical
5. Section 260533 - Electrical Materials and Methods
6. Section 260800 - Electrical Acceptance Tests

1.2 SUMMARY

A. Install the following equipment furnished by others.

1. Variable speed drives and variable speed motor controllers.
2. Motor controls that are shipped loose with packaged mechanical systems.

B. Provide the following equipment as shown.

1. Motor starters
2. Motor control centers (MCC's)
3. Disconnect switches
4. Motor control devices
5. Power factor correction capacitors

1.3 REFERENCES

A. Provide motor controls in conformance with NEMA Standard ICS 2, "Standards for Industrial Control Devices, Controllers and Assemblies."

B. Provide MCC's in conformance with UL Standard 845, "Motor Control Centers."

C. Install MCC's in accordance with NEMA Standard ICS 2.3, "Instructions for the Handling, Installation, Operation, and Maintenance of MCC's".

1.4 SUBMITTALS

A. Submit shop drawings for each MCC including dimensioned plans and elevations and component lists. Show ratings, including short time and short-circuit current ratings, and horizontal and vertical bus ampacities.

B. Submit schedule of features, characteristics, ratings, and factory settings of individual MCC units.

C. Submit interconnecting wiring diagrams of individual MCC units pertinent to the class and type specified for the MCC.

D. Submit schematic diagram of each type of controller unit indicated.

1.5 MOTOR CONTROL REQUIREMENTS

A. Motor starters and MCC's shall include motor short circuit and overload protection, and a motor disconnecting means as shown.

B. Reduced voltage or soft starters shall be provided for motors over 100 horsepower as shown.

1.6 POWER FACTOR CORRECTION CAPACITORS

A. Provide power factor correction capacitors for constant speed motors 50 horsepower and above. For two speed motors, provide capacitors for the low speed winding only.

1. Do not provide power factor correction capacitors for motors controlled by variable speed drives, variable speed motor controllers, or electronic soft starters.
2. Size capacitors to correct their motor full load power factors to at least 90 percent but not more than 96 percent.

PART 2 - PRODUCTS

2.1 MEDIUM VOLTAGE MOTOR STARTERS

INSERT CODE GAUGE NEMA TYPE 1, NEMA TYPE 3R OR OTHER ENCLOSURE TYPE IN THE BLANKS BELOW AS APPLICABLE.

A. Medium voltage motor starters shall be rated 5kV, of the fused disconnect switch, vacuum breaker contactor type, with 3 motor feeder CT's and overload relays, "hand-off-auto" selector switch, red "run" pilot light, 120 volt fused control transformer, 2 N.O. and 2 N.C. auxiliary contacts, and code gauge NEMA Type 1 enclosure indoors or a NEMA Type 3R enclosure outdoors. Terminals shall be identified as accepting copper and aluminum cables. Allen-Bradley, Eaton, GE, Siemens or Square D. Provide current limiting, medium voltage fuses sized in accordance with the motor nameplates.

2.2 COMBINATION MOTOR STARTERS

MODIFY PARAGRAPH BELOW TO INDICATE NUMBER AND TYPES OF CONTACTS REQUIRED.

A. Combination motor starters shall be of the voltage and NEMA type shown, horsepower rated for the motors shown, 3 pole, fusible disconnect switch type, with "hand-off-auto" selector switch, red "run" pilot light, 120 volt control transformer with 3 amp maximum fuses, 2 N.O. and 2 N.C. auxiliary contacts, and a NEMA Type 1 enclosure indoors or a NEMA Type 3R enclosure outdoors. Terminals shall be identified as accepting copper and aluminum cables. Provide fuse rejection kits, Class R dual element fuses and overload heaters sized in accordance with the motor nameplate. Allen-Bradley, Eaton, GE, Siemens or Square D.

2.3 MANUAL MOTOR STARTERS

A. Manual motor starters shall be of the voltage shown, horsepower rated for the motors shown, single-pole, double-pole or three-pole as shown, single throw, toggle operated. Terminals shall be identified as accepting copper and aluminum cables. Provide a red "run" pilot light, motor overload heater(s), padlock provision and a NEMA Type 1 enclosure indoors or a NEMA Type 3R enclosure outdoors. Allen-Bradley, Eaton, GE, Siemens or Square D.

2.4 MOTOR CONTROL CENTERS

A. Manufacturers: Subject to compliance with requirements, provide products by Allen-Bradley, Eaton, General Electric, Siemens, or Square D.

B. Wiring Classification: Class I, Type A, as defined in NEMA ICS 2. Bus and switch terminals shall be identified as accepting copper and aluminum cables.

C. Enclosure: Freestanding modular steel cabinets, NEMA Type 1.

D. Compartments: Modular, with individual doors with concealed hinges and quick-captive screw fasteners.

E. Interchangeability: Construct compartments so it is possible to remove units without opening adjacent doors, disconnecting adjacent compartments, or disturbing the operation of other units in the control center. Units requiring the same size compartment shall be interchangeable, and compartments shall be constructed to permit ready rearrangement of units.

F. Wiring Gutters: Provide each vertical section of structure with horizontal and vertical wiring gutters for wiring to each unit compartment in each section. When aluminum feeder cables are being used, oversize the wiring gutters for aluminum cables. Provide supports to hold wiring rigidly in place.

G. Short-Circuit Current Rating for Each Section shall be 22,000-amperes rms, symmetrical amperes.

H. Bus Ampacity Ratings: Confirm ampere ratings 600 amperes for horizontal and 300 amperes for the vertical main buses. Install bus and bus accessories, as needed, to install additional starters in the future in locations currently marked (or shown) as 'spaces'.

I. Horizontal Bus Arrangement: Extend main phase and ground buses with same capacity the entire length of the MCC, with provision for future extension at select either one end or both ends both ends by means of bolt holes and captive bus splice sections or approved equivalent.

J. Short-Circuit Withstand Rating: Same as short-circuit current rating of section.

K. Motor Controller Units: Combination controller units as specified in "Combination Starters" above; of types and with features, ratings, and circuit assignments as indicated. Provide units with full-voltage, across-the-line, magnetic controllers up to and including Size 3 installed on drawout mountings with connectors that automatically line up and connect with vertical section buses while being racked into their normal energized positions. Units shall have short-circuit current ratings, equal to or greater than, the short-circuit current rating of the MCC section.

L. Overcurrent Protective Devices: Provide types of devices with features, ratings, and circuit assignments indicated, as specified in "Combination Starters" above. Individual feeder tap units through 225 ampere rating shall be installed on drawout mountings with connectors that automatically line up and connect with vertical section buses while being racked into their normal energized positions.

M. Spaces and Blank Units: Compartments fully bussed and equipped with guide rails or equivalent, ready for insertion of drawout units.

N. Spare Units: Provide type, sizes, and ratings as indicated, and install in compartments indicated "spare."

O. Identification Products: Provide nameplates as specified in Section 260500, "Basic Electrical Materials and Methods."

P. Finishes: Manufacturer's standard finish suitable for the environment in which installed.

2.5 DISCONNECT SWITCHES

A. Disconnect switches shall be of the voltage and amperage shown, horsepower rated for motor applications, fusible or non-fusible as shown, 3 pole, NEMA Type HD heavy duty, in a NEMA Type 1 enclosure indoors or NEMA Type 3R enclosure outdoors. Terminals shall be identified as accepting copper and aluminum cables. Provide fuse rejection kits and Class R dual element fuses in fusible disconnect switches. Provide early break auxiliary contacts in motor disconnect switches used with variable frequency drives. Disconnect switches shall be lockable in the open and closed positions. Allen-Bradley, Eaton, GE, Siemens or Square D.

2.6 MOTOR CONTROL CIRCUIT DEVICES

A. Motor control circuit devices shall be heavy duty, rated for operation at 120 volts AC, and contained in a NEMA Type 1 enclosure indoors or a NEMA Type 3R enclosure outdoors. Pilot lights shall be "push-to-test" transformer type. Allen-Bradley, Eaton, GE, Siemens or Square D.

2.7 POWER FACTOR CORRECTION CAPACITORS

A. Power factor correction capacitors shall be unitized with metallized electrodes, polypropylene dielectric, biodegradable fluid, pressure activated circuit interrupters, and shall be self-healing. Capacitors shall be equipped with discharge resistors, replaceable current limiting fuses, and blown fuse indicators. Terminals shall be identified as accepting copper and aluminum cables. Eaton, General Electric, Myron Zucker, Siemens, Square D.

1. When MCC's are provided, locate the power factor correction capacitors within the MCC structures.
2. Label each capacitor as "Power Factor Correction Capacitor" and indicate the load served and the capacitor KVA rating.

PART 3 - EXECUTION

3.1 INSTALLATION REQUIREMENTS

A. Anchor MCC assemblies to steel channel sills arranged and sized in accordance with manufacturer's recommendations. Attach by tack welding or bolting. Level and grout sills flush with MCC mounting surfaces. Provide 4-inch high concrete housekeeping pads where indicated.

B. Tighten MCC bus joint bolts and electrical connector and terminal bolts in accordance with manufacturer's installation instructions and torque-tightening values. Where manufacturer's torque values are not stated, use those specified in UL 486A and UL 486B.

C. Motor starter hand-off-auto switches shall be wired so that in the "hand" position, the motor runs independently of automatic start/stop controls. Only the safety and modulating controls shall remain active. In the "auto" position, all start/stop controls shall be active.

D. High temperature detectors (firestats), smoke detectors, low temperature detectors (freezestats), flow switches and other safety controls shall be energized and operational whenever the equipment they protect is operating.

E. Motor starters shall be wired so that the motors automatically restart after a power disruption. Time delay relays shall be provided for large pumps and fans so that they can coast down before restarting after a momentary outage, and to prevent all of the large motors from restarting simultaneously.

F. Motor controls installed below piping or in areas with fire protection sprinklers shall be protected by drip shields.

G. Connect power factor correction capacitors between the motor starter contacts and the overload relays.

3.2 FIELD QUALITY CONTROL

A. Prior to any testing, perform visual inspections to verify the following:

1. The equipment is properly installed and anchored.
2. The equipment is free from damage and defects.
3. Shipping blocks and restraints have been removed.
4. Electrical terminations have been properly tightened.
5. The equipment has been properly aligned.
6. The equipment has been properly lubricated.
7. The ventilation louvers are open and unobstructed.
8. The equipment has been thoroughly cleaned inside and outside.
9. The equipment is properly labeled and labels are correct.
10. The equipment is ready to be tested.

B. Perform the following testing and submit a test report.

1. Verify proper phasing of power circuits.
2. Perform a 1,000-volt Megger test on buses, motor starters and disconnect switches. This test may be combined with the power cable Megger test by testing the equipment and terminated cables together.
3. Perform a continuity check on motor control circuits and control panel internal wiring.
4. Perform an operational test on the controls and alarms.

3.3 COMMISSIONING

A. Perform Commissioning activities per Related Sections above.

DELETE THE FOLLOWING SECTION UNLESS THE PROJECT INCLUDES UNUSUAL MOTOR CONTROLS UNFAMILIAR TO MAINTENANCE ELECTRICIANS.

3.4 TRAINING

A. Provide a qualified service technician from the Manufacturer's staff to provide training.

REVISE THE TRAINING REQUIREMENTS BELOW TO BE PROJECT SPECIFIC. SAMPLE TRAINING LANGUAGE IS PROVIDED, EDIT TO SUIT PRODUCT OR SYSTEM, INCLUDING DURATION. TRAINING IS NOT REQUIRED UNLESS THE PRODUCT OR SYSTEM IS COMPLEX, UNIQUE, OR NEW TO THE U-M PLANT MAINTENANCE DEPARTMENT. BECAUSE OF THE COST INVOLVED IN TRAINING DO NOT INDISCRIMINATELY SPECIFY TRAINING

B. Train Owner's maintenance personnel on equipment operation, start-up and shutdown, trouble-shooting, servicing and preventative maintenance procedures. Review the data contained in the Operating and Maintenance Manuals with Owner's personnel. Training shall occur separate from startup activities. Provide 2 hours of training minimum.

END OF SECTION 262900

UNIVERSITY OF MICHIGAN
ARCHITECTURE, ENGINEERING AND CONSTRUCTION

ARCHITECTURE & ENGINEERING
326 East Hoover, Mail Stop B
Ann Arbor, MI 48109-1002
Phone: 734-764-3414
Fax: 734-936-3334

BuildingName
The Description of the Project
P00000000 0000

SPECIFICATION DIVISION 26

NUMBER SECTION DESCRIPTION

DIVISION 26 ELECTRICAL
SECTION 263000 - ENGINE-GENERATOR SYSTEM

END OF CONTENTS TABLE

DIVISION 26 ELECTRICAL
SECTION 263000 - ENGINE-GENERATOR SYSTEM

PART 1 - GENERAL

1.1 RELATED DOCUMENTS

INCLUDE PARAGRAPH 1.1.A AND B IN EVERY SPECIFICATION SECTION. EDIT RELATED SECTIONS 1.1.B TO MAKE IT PROJECT SPECIFIC.

A. Drawings and general provisions of the Contract, Standard General and Supplementary General Conditions, Division 01 Specification Sections, and other applicable Specification Sections, in particular the Related Sections listed below, apply to this Section.

IN 2 BELOW, SELECT PROPER COMMISSIONING SPEC SECTION NUMBER. DELETE 3 IF NO FIRE PUMP CONNECTIONS ARE INVOLVED.

B. Related Sections:

1. Section 017823 - Operation and Maintenance Manual
2. Section 019100/019110 - Commissioning
3. Section 213113 - Fire Pumps
4. Section 231123 - Facility Natural Gas Piping
5. Section 235100 - Breechings, Chimneys and Stacks
6. Section 260513 - Medium, Low & Control Voltage Cables
7. Section 260526 - Grounding and Bonding for Electrical
8. Section 260533 - Electrical Materials and Methods
9. Section 260800 - Electrical Acceptance Tests

SHOW THE GENERATOR RATINGS, AUTOMATIC TRANSFER SWITCH RATINGS AND TYPES (OPEN TRANSITION, CLOSED TRANSITION OR SOFT LOADING), CONTROL CIRCUITS AND ALARMS ON THE ONE LINE, RISER AND SCHEMATIC DIAGRAMS.

1.2 SUMMARY

A. Section Includes:

EDIT TO MAKE PARAGRAPHS PROJECT-SPECIFIC.

1. Packaged natural gas fueled engine-generator sets for emergency and/or standby power supply, rated as defined below and as shown on the Drawings.
2. Open transition, closed transition and/or soft-loading automatic transfer switches (ATSs) with full maintenance bypasses, rated as defined below and as shown on the Drawings.
3. Accessories as defined below.

B. Work Not Included:

EDIT TO MAKE PARAGRAPHS PROJECT-SPECIFIC.

1. Natural gas piping from the utility gas regulator including a gas line isolation valve at the engine-generator, except the gas strainer, secondary regulator, gas pressure gauge and solenoid valve shall be provided with the engine-generator.

2. Exhaust system from the engine silencer to its discharge point, except the rain cap shall be provided with the engine-generator.

1.3 SUBMITTALS

A. Manufacturer name and model number of major components.

B. Shop Drawings including overall plan and elevation of major components with dimensions. Indicate the required installation and maintenance access clearances, conduit entry points, and cable termination point details.

C. Details for weatherproof enclosure including maintenance access details and dimensions, fluid check and drain details and acoustic performance details.

D. Battery and charger details, model numbers and interconnection details.

E. Remote annunciator panels, points monitored, wiring requirements, and spare contacts available to other monitoring systems.

F. Size, weight, and movement restrictions of shipping sections.

G. Diagrams and data noting normal load, sustainable fault current during faults downstream, and emergency ratings of the system.

1. Generator impedance data.
2. Generator thermal damage curve.
3. Generator breaker time-current characteristic curves.

H. Computer simulations showing the anticipated voltage and frequency dips during the specified step loading sequence.

I. Fuel supply flow requirements including volumetric flow rate and pressure to achieve 100 percent full load in the specified time.

J. Projected sound level of system measured at 7 meters (23 feet) in front of the radiator. Include the load bank's sound contribution if a load bank is adjacent to the generator.

K. Exhaust gas temperatures at full load.

L. Complete wiring diagrams specific to this project, including control wiring between the engine-generator, automatic transfer switches, load bank, remote start and stop switches, remote annunciators, ATS position indicating lights and outputs to the Building Automation System.

M. Automatic Transfer Switches

1. Manufacturer and model
2. Overall physical sizes, weights, environmental constraints.
3. Voltage ratings, ampere ratings, number of poles.
4. Full power schematic including maintenance bypass assembly.
5. Affirmation that ATS is UL listed for this application.

N. Certified reports of source quality control and factory tests prior to engine-generator delivery.

1. Certification of engine compliance to the current Environmental Protection Agency (EPA) emissions standards.
2. Certifications of compliance with NFPA 110 for a Level 1 system, and with UL 2200.

3. Certification of compliance with transient and voltage dip responses and steady state voltage and frequency stability.
4. Test reports, signed and dated, for all factory and prototype tests.

O. Installation, Operation and Maintenance (O&M) manuals per Related Sections.

P. Commissioning reports and documentation per Related Sections.

Q. Warranty Documentation.

1.4 DELIVERY, STORAGE AND HANDLING

A. Protect the engine-generator, automatic transfer switches and accessories from the weather, moisture condensation, dirt and debris at all times. Do not stage equipment on the ground.

B. Deliver engine-generator, automatic transfer switches and accessories adequately packaged for lifting, skidding, or rolling into final position, according to manufacturer's instructions.

1.5 QUALITY ASSURANCE

A. Manufacturers and Products: The products and manufacturers specified in this Section establish the standard of quality for the Work. Subject to compliance with all requirements, provide specified products from the manufacturers named in Part 2.

B. Reference Standards: Products in this section shall be built, tested, factory certified and installed in compliance with the specified quality assurance standards; latest editions, unless noted otherwise.

1. EPA emissions standards for stationary internal combustion engines.
2. IEEE C2, "National Electrical Safety Code".
3. IEEE Standard 446, "IEEE Recommended Practice for Emergency and Standby Power Systems for Commercial and Industrial Applications".
4. NEMA Standard ICS 10, "AC Automatic Transfer Switches".
5. NEMA Standard MG 1, “Motors and Generators”.
6. NFPA 70, "National Electrical Code".
7. NFPA 110, "Emergency and Standby Power Systems".
8. UL 1008, "Standard for Automatic Transfer Switches".
9. UL 2200, "Standard for Stationary Engine Generator Assemblies".

C. Perform manufacturer's standard quality assurance testing on the engine-generator system prior to shipping.

1.6 WARRANTY

A. Provide a complete parts and labor warranty for a minimum of one year from the date of Substantial Completion.

1. Return a call for service within 24 hours, and provide a repair person on site within 48 hours after the call.

PART 2 - PRODUCTS

EDIT 2.1 TO MAKE IT PROJECT-SPECIFIC.

2.1 MANUFACTURERS

A. Engine-Generator Manufacturers: Subject to compliance with all requirements, provide generators from one of the following manufacturers:

1. Caterpillar.
2. Cummins Power Generation.
3. Generac Industrial Power.
4. Kohler Co.

B. Open and Closed Transition Automatic Transfer Switch Manufacturers: Subject to compliance with all requirements, provide ATSs from one of the following manufacturers:

1. ASCO.
2. Cummins.
3. Eaton.
4. GE Zenith.
5. Kohler.

C. Soft Loading Automatic Transfer Switch Manufacturers: Subject to compliance with all requirements, provide ATSs from one of the following manufacturers:

1. ASCO.
2. Eaton.
3. Kohler.

DELETE PARAGRAPH D IF LOAD BANK IS NOT REQUIRED.

D. Load Bank Manufacturers: Subject to compliance with all requirements, provide load banks from one of the following manufacturers:

1. Avtron.
2. Sephco.
3. Simplex.

2.2 ENGINE-GENERATOR ASSEMBLY

A. The system including all components shall be NFPA 110 Level 1 compliant, UL 2200 labeled, and rated for operation in a Seismic Category B area at an elevation up to 1,000 feet above sea level.

EDIT B TO SPECIFY GENERATOR STEP LOADING SEQUENCE. LIST THE STEPS, LOADS IN EACH STEP, AND RELATIVE PRIORITY OF EACH STEP.

B. The system shall be rated to provide power in four steps while complying with the specified transient and steady state voltage and frequency requirements:

1. 20 kW emergency power in 10 seconds to life safety loads and high rise elevators.
2. 150 kW required standby power in 30 seconds to mechanical system motor loads.
3. 100 kW required standby power in 45 seconds to fire pump.

4. 100 kW optional standby power in 60 seconds to laboratory equipment including computer servers and freezers.

EDIT FOR PROJECT CONDITIONS. SELECT ONE OF THE FOLLOWING TWO GENERATOR ENCLOSURE PARAGRAPHS.

C. Configure the engine-generator for outdoor installation in an enclosure. Outdoor temperatures range from minus 22 degrees F to 104 degrees F (minus 30 degrees to 40 degrees C), with condensing conditions, rain, snow or ice all being possible.

D. Configure the engine-generator for indoor installation in a room supplied with combustion and ventilation air directly from the outside. Outdoor air temperatures range from minus 22 degrees F to 104 degrees F (minus 30 degrees to 40 degrees C) and humidity may be condensing.

E. Mount the engine-generator with vibration isolators on a welded steel base, to permit suitable mounting on any level surface.

F. Provide engraved metal or laminated plastic nameplates indicating ratings of equipment and Manufacturer's shop order number for the equipment. Laminated plastic nameplates shall consist of black letters at least 1/4" high on a white background. The nameplates shall be affixed with machine screws.

2.3 ENGINE

A. Provide a natural gas fueled, liquid cooled, naturally or blower aspirated engine of 4-cycle design, sized as required to meet the specified generator kW output continuous rating.

B. The engine shall be factory certified as compliant with the current EPA emissions standards. When the engine is not factory certified as compliant with EPA emissions standards, provide an EPA compliant capable engine. Provide the services of an independent testing agency to perform the first field certification.

C. Provide controls to allow emergency load pickup in 10 seconds or less, with recovery time of less than 3.5 seconds, a voltage dip of less than 39.5%, and a frequency dip of less than 1.5 Hz.

D. The engine-generator shall produce full rated output at a gas pressure of 10"-20" inches of water column.

E. Provide a unit mounted radiator, fan, engine-driven coolant pump, and closed coolant recovery system with the following.

1. Coolant solution of 50 percent ethylene-glycol antifreeze and 50 percent water.
2. A sight glass in which the coolant level can easily be observed.
3. A reclamation bottle to contain coolant overflow.
4. Coolant fill and oil fill drain points that are easily accessible for maintenance without the use of a pump and hoses.
5. A radiator designed to allow safe full load operation in minus 22 degrees to 104 degree F ambient temperature conditions.
6. A duct flange on the radiator outlet.
7. A fan guard for personnel safety.

F. Provide an intake air filter with replaceable element.

1. Provide an electronic isochronous governor with speed sensing to maintain generator output frequency within 0.5 percent from no load to full load during steady state conditions, and within 5 percent during a 50 percent step load increase or decrease.

G. When required to achieve full rated output at 104 degrees F ambient air temperature, provide an aftercooler to cool the combustion air. The aftercooler shall be equipped with the same accessories as the radiator.

H. Provide a starter battery system to serve the engine-generator and automatic transfer switches, including:

1. Lead acid storage batteries, battery rack and all cables and connections. Size the battery for the range of ambient conditions and to meet the power requirements of the engine-generator and automatic transfer switches after eight cyclic attempts to start the engine.
2. A remotely mounted battery charger with a solid state voltage regulator in a separate enclosure suitable for wall mounting near the batteries.
3. Remote 2-wire starting utilizing a solenoid shift electric starter.

I. Provide an engine-driven positive displacement lube oil pump to supply full pressure lubrication. Provide a replaceable, easily accessible oil filter with internal bypass.

J. Provide an engine fuel system designed for operation on natural gas having a BTU content of 1000 BTU per cubic foot. Include a gas strainer, secondary gas regulator, gas pressure gauge downstream of the regulator, gas solenoid valve, flexible gas line, and all necessary piping, installed at the point of manufacturing, and terminating at a single pipe opening external to the mounting base.

K. Provide sensing elements for oil pressure, coolant temperature, coolant level, overcrank, and overspeed. Connect these sensors to the control panel using a wiring harness with wire numbering at each end of the harness for easy identification. Provide each connection with a molded rubber boot to protect the connection from corrosion. Provide all wiring in flexible conduit with wiring and conduit rated for the application.

EDIT THE VOLTAGE OF JACKET HEATER TO MATCH ELECTRICAL SYSTEM DESIGN.

L. Provide an engine mounted, thermostatically controlled, 208 Volt or 120 Volt, single phase, coolant jacket heater to aid in quick starting.

EDIT THE DBA VALUE TO MATCH THE SOUND STUDY. SEE DG 263000.

M. Provide a silencer rated for a minimum sound attenuation of 35 dB when measured 7 meters from its discharge opening. Mount the silencer and connect to the exhaust stack using a flexible, seamless, stainless steel exhaust connection. Provide a hinged, flapper style rain cap. A stack termination that deflects exhaust horizontally, including an inverted cone style cap is not acceptable. Properly size all components to assure operation without excessive backpressure.

N. Silencer shall be selected and sized by engine manufacturer and designed with an exhaust piping system that will not exceed manufacturer's engine backflow pressures.

O. Provide a catalytic converter when necessary to meet EPA emissions standards. The catalytic converter may be separate from or integral to the silencer. It shall include a hatch or port for changing of the catalyst.

P. Provide a manual blow-down ball valve no more than 78 inches above the floor in a pipe tapped into the low point of the exhaust system. Pipe the discharge to a bucket on the floor.

2.4 GENERATOR

A. Provide a 4-pole, 3-phase, 4-wire, ungrounded wye, brushless 60 Hz alternator with a 2/3 pitch and fully linked amortisseur windings, rated as indicated on the Drawings. Mount and directly connect the generator to the engine shaft to ensure permanent alignment. Extend all phase and neutral leads into a connection panel.

B. Generator shall include an integral brushless permanent magnet exciter.

C. Generator and exciter shall have Class H insulation rated for a temperature rise of 105 degrees C over a 40 degrees C ambient.

D. Provide a solid-state voltage regulator, separate from the exciter, to control output voltage within 1.0 percent from no load to full load during steady state conditions, and within 20 percent during a 50 percent step load increase or decrease. Upon a 50 percent step load increase, the voltage shall recover to steady state within 3.0 seconds.

1. If a heavy load dips the output frequency, the voltage regulator shall have a voltage droop of 4 volts/hertz to maximize motor starting capability. The frequency at which the droop operation begins shall be adjustable, allowing the generator to be properly matched to the load characteristics and ensuring optimum system performance.
2. Provide a limiting circuit in the voltage regulator to prevent output voltage surges in excess of 110 percent of rated voltage during generator set operation.
3. Provide capability of the voltage regulator to shut down on a loss of the sensing signal, to prevent an overvoltage condition from occurring. A voltage regulator that can go into a full field condition is unacceptable.
4. Provide LED lights on the voltage regulator to indicate proper sensing and operation.
5. Provide a minimum of plus or minus 10 percent voltage adjustment from the rated value.
6. At no load the generator’s harmonic content measured line to line or line to neutral shall not exceed 5 percent total and 3 percent for any single harmonic. The Telephone Influence Factor as determined according to NEMA MG 1 shall not exceed 50 percent.

7. For a 3 phase bolted fault at the output terminals, the generator shall produce a minimum of 250 percent of rated full load current for not less than 10 seconds, with no damage to the engine-generator.

E. Provide a connection panel that is an integral part of the generator to allow the Contractor a convenient location to make electrical output connections. Panel shall be NEMA 1. The panel shall include phase and isolated neutral connection bars suitable to accept Owner's 2 hole compression lugs. Provide a NEMA standard 2 hole compression lug sized for No 4/0 AWG cable for bonding of the engine-generator.

F. Provide UL listed, 100 percent rated, generator main circuit breakers with adjustable long time, short time and instantaneous trip settings, rated as shown on the drawings. A system utilizing a manual reset generator field circuit breaker with current transformer is not acceptable. Locate the circuit breakers in the generator connection panel. Provide barriers between emergency and standby power circuit breakers.

DELETE THE NEXT PARAGRAPH IF THE SYSTEM DOES NOT INCLUDE A SOFT LOADING AUTOMATIC TRANSFER SWITCH.

G. Provide a DC-operated shunt trip coil on each generator main circuit breaker, with coils rated at the engine starter battery system voltage. Mounting level shall be accessible from adjacent grade.

2.5 CONTROLS

A. Provide an NFPA 110 Level 1 compliant engine-generator control panel in a NEMA 1 enclosure, shock mounted to the engine-generator set by the manufacturer. The top of the panel shall be no more than 78 inches above the finished floor.

B. Provide a fused low voltage control circuit to power the controls.

C. Provide the following analog or digital indicators and controls as required by NFPA 110 for a Level 1 system. The AC voltmeter, AC ammeter and frequency meter shall be three separate indicators, not part of a scrollable digital display.

1. AC voltmeter.
2. AC ammeter.
3. Frequency meter.
4. Voltmeter and ammeter phase-selector switches.
5. DC voltmeter (battery charging voltage).
6. Generator voltage adjustment.
7. Engine cool-down timer.
8. Non-resettable engine run-time meter.
9. Engine coolant temperature gauge.
10. Engine lubricating-oil pressure gauge.
11. Complete engine start-stop control, which starts the engine upon a contact closure and stops the engine upon a contact opening.
12. Cyclic cranking limiter to open the starting circuit after eight attempts if the engine has not started within that time.

13. 3-position RUN/OFF/AUTOMATIC selector switch. The engine-generator annunciator shall monitor this switch and provide a "Generator Trouble" alarm when the switch is not in AUTOMATIC.
14. "Generator Running" and "Generator Trouble" output contacts for connection to the Building Automation System DDC panel.

D. Provide a solid state annunciator complying with NFPA 110 on the control panel, complete with individual alarm lights, a common audible alarm with reset switch, and one common "Generator Trouble" output contact indicating the following engine and generator conditions:

1. Engine-generator system providing power.
2. Overcrank shutdown.
3. High coolant temperature shutdown.
4. Low lube oil pressure shutdown.
5. Overspeed shutdown.
6. Loss of coolant shutdown.
7. Overvoltage shutdown.
8. Low coolant temperature alarm.
9. High coolant temperature pre-alarm.
10. Low coolant level pre-alarm.
11. High battery voltage alarm.
12. Low battery voltage alarm.
13. Battery charger failure.
14. Control switch not in Automatic alarm.
15. Lamp test.

E. Provide a remote manual stop station with a red mushroom head pushbutton and a clear plastic hinged cover in accordance with NFPA 110. The stop station shall be waterproof and suitable for wall mounting outdoors. Locate stop station remotely from the engine generator control panel and the engine generator enclosure where directed by the Owner.

2.6 ENGINE-GENERATOR ACCESSORIES

DELETE A FOR AN INDOOR INSTALLATION. OUTDOORS, EDIT A.1 BY DELETING THE FLOOR REQUIREMENT IF THE ENGINE-GENERATOR WILL SIT ON A CONCRETE HOUSEKEEPING PAD.

A. Provide a weather-tight protective enclosure for the engine-generator set as follows:

1. Provide a heavy gauge steel enclosure constructed with corner posts. Provide a solid steel floor. Coat the enclosure with electrostatic applied zinc and finish with baked enamel paint on all interior and exterior surfaces.

EDIT OR DELETE A.2 TO COMPLY WITH THE SOUND STUDY. DELETE THE FLOOR REQUIREMENT IF THE ENGINE-GENERATOR WILL SIT ON A CONCRETE HOUSEKEEPING PAD.

2. Provide a sound attenuating type enclosure including louvers, with sound insulated walls, roof, floor and doors, which achieves a maximum of 70 dBA at 7 meters.
3. Provide bird screens and filters arranged to permit air circulation while excluding exterior dust, birds, rodents and the insertion of foreign objects.

4. Locate the silencer and catalytic converter inside the enclosure.
5. Provide large, easily opened doors on the enclosure to allow access to the engine, generator, radiator and aftercooler caps, all normally accessed maintenance points including oil and coolant fill, drain and filter points, and the control panel. Provide each door with stainless steel lockable hardware with identical keys. Padlocks are not acceptable.
6. Construct the enclosure of sufficient structural integrity to resist deformation and denting by people climbing on it and rugged enough to be vandal resistant. Comply with the Michigan Building Code requirements for wind loads.

DELETE 7 ON UNITS 300 KW OR LESS.

7. Provide the enclosure with 120 Volt dust and moisture resistant, low temperature, interior fluorescent lighting, a light switch, and two 120 Volt GFCI duplex receptacles.

DELETE B IF A GENERATOR-BACKED 208Y/120 VOLT RECEPTACLE PANEL IS AVAILABLE NEAR BY.

B. Provide a 208Y/120 Volt, 60 amp minimum, 3 phase, main lugs only load center panel with circuit breakers to feed the battery charger, coolant jacket heater, motorized ventilation dampers, lights and receptacles. Mount the load center panel where shown on the Drawings.

C. Provide a remote annunciator panel to monitor alarm and trouble conditions at the engine-generator, batteries, and battery charger. The annunciator shall be in a NEMA 1 enclosure suitable for flush or surface mounting on a wall.

1. Provide an "Engine-generator providing power" alarm light in the annunciator.
2. Provide the same alarm lights contained on the engine-generator control panel annunciator.

2.7 AUTOMATIC TRANSFER SWITCHES

EDIT A TO MAKE IT PROJECT SPECIFIC. STATE EACH ATS VOLTAGE RATING, CURRENT RATING AND NUMBER OF POLES ON THE DRAWINGS.

A. Provide open-transition, closed-transition and/or soft-loading automatic transfer switches (ATSs) with full maintenance manual bypass isolation, UL 1008 listed, rated and with the number of poles indicated on the Drawings.

1. Open-transition ATSs shall perform an open transition (break-before-make) transfer from the normal to the emergency source and a break-before-make re-transfer back to the normal source. A sync-check relay shall normally delay re-transfer (when both sources are available) until both sources are close to being in synchronization.
   a. Open-transition ATSs only shall provide a re-transfer pre-signal to elevators operating on emergency power.
   b. The pre-signal shall be a dry contact closure at an adjustable time of 1 to 10 seconds before re-transfer.

2. Closed-transition ATSs shall perform a closed-transition (make-before-break) transfer from the normal to the emergency source and a closed transition re-transfer back to the normal source, thus eliminating a momentary interruption of power to the loads. A sync-check relay shall normally delay transfer and re-transfer (when both sources are available) until both sources are close to being in synchronization.
3. Soft-loading ATSs shall provide the same modes of operation as the closed-transition ATSs and include paralleling and protective control equipment to permit the following additional modes:
   a. Soft Load Transfer Mode: Allows the ATS load to be completely isolated from the utility using a programmed soft load transfer / re-transfer sequence to or from the engine-generator.
   b. Maintained Parallel Base Load: Establishes and maintains a safe parallel connection of the engine-generator with the normal source until a local or remote signal terminates this condition. The engine-generator shall operate at the base load level set by the Owner on the control panel.
   c. In the event either source connected to the load becomes unacceptable while in any operating mode, the soft load ATS shall automatically isolate the emergency and normal sources and revert to operation as an open transition ATS.

INSERT THE WORST CASE ATS 1.5 OR 3 CYCLE CLOSE ON AND WITHSTAND RMS SYMMETRICAL SHORT CIRCUIT CURRENT RATING REQUIRED BASED UPON USING ANY UPSTREAM CIRCUIT BREAKERS.

B. ATSs shall be rated to close on and withstand, and UL 1008 tested and labeled with a 1.5 or 3 cycle rating of [insert] amps minimum RMS symmetrical short circuit current when used with any upstream circuit breakers. ATSs not UL 1008 tested and labeled with 1.5 or 3 cycle ratings, or that have series or specific upstream breaker ratings only, are not acceptable.

C. Four pole ATSs shall include fully rated, overlapping neutral contacts. The normal power and emergency power neutrals shall only be connected together during transfer and re-transfer operations, and only for 100 milliseconds or less.

D. ATSs shall contain readily accessible terminal blocks for connection of external wiring.

E. ATSs shall include a full maintenance bypass and isolation switch section to allow either the normal or the emergency source to directly feed the load while totally isolating all components in the automatic transfer switch compartment from power except from the 120 Volt control power.

1. Bypass isolation switches shall be rated the same as the automatic transfer switches.
2. Bypass isolation switches shall include closed transition (make before break) contacts to avoid power interruptions during transfer and re-transfer.
3. Provide manual operators with operating handles capable of being used without opening the enclosure door.

F. ATSs shall be electrically operated and mechanically held with a solenoid operated, momentarily energized electrical operator.

G. ATSs shall be positively locked and unaffected by momentary outages, so that contact pressure is maintained at a constant value.

H. Main switch contacts shall be of silver composition. ATSs rated 600 amperes and above shall have front removable and replaceable contacts, and main contacts shall be protected by separate arcing contacts.

I. Inspection of contacts shall be possible from the front without disassembly of operating linkages and without disconnection of power conductors.

J. ATSs shall be housed in NEMA 1 enclosures with a hinged front door secured by a latch. The door shall open a minimum of 90 degrees. The latch handle shall include provisions for locking in the closed position.

K. Provide a control panel with sensing and control logic directed by a built-in microprocessor.

1. Mount the control panel on the front door of the ATS enclosure. Connect the control panel to the transfer switch with an interconnecting wiring harness. Include a keyed disconnect plug with the harness to enable the control panel to be disconnected from the transfer switch for maintenance.
2. Provide sensing and control logic on printed circuit boards. Provide industrial grade plug-in type interfacing relays with dust covers.
3. Provide monitoring of voltage of each phase of the normal and emergency sources. Provide voltage sensing with pickup voltage adjustable from 85 percent to 100 percent of nominal dropout, adjustable from 75 percent to 98 percent of pickup setting, and independent frequency sensing with pickup adjustable from 90 percent to 100 percent of nominal.
4. Provide a repetitive accuracy of all settings within plus or minus 2 percent over an operating temperature range of minus 22 degrees F to 104 degrees F.
5. Provide voltage and frequency settings that are field programmable in 1 percent increments.
6. Provide a time delay on transfer to emergency power, adjustable from 0 to 5 minutes for controlled timing of transfer of loads to emergency.
7. Provide a time delay on re-transfer to normal power, adjustable from 0 to 30 minutes. Provide an automatic bypass of this time delay if the emergency source fails and the normal source is acceptable.
8. Provide momentary-type test switches to simulate a normal source failure.
9. Provide terminals for two remote controlling contacts; one that signals the ATS to transfer to emergency and the other to inhibit transfer to emergency and/or re-transfer to normal.
10. Provide auxiliary contacts rated 10 amps, 250 VAC, consisting of two contacts that are closed when the ATS is connected to the normal source and two contacts that are closed when the ATS is connected to the emergency source. Wire these contacts to terminals for connection to external wiring.

11. Provide indicating lights for the presence of normal power and presence of emergency power; one showing ATS is connected to the normal source (green) and another to indicate when the ATS is connected to the emergency source (red).

L. Provide one ATS with a system exerciser for automatic exercising and testing of the engine-generator and ATSs. Include the following features.

1. An engine start time clock capable of being programmed for time of day, day of the week, week of the month, months of the year, and duration of the exercising.
2. Time clock shall automatically adjust, resetting itself for changes between Standard Time and Daylight Savings Time.
3. Controls to enable and disable the transfer of the ATSs during engine exercising.

EDIT THIS ARTICLE PER DESIGN GUIDELINE SBA-J FOR A HIGH RISE BUILDING OR A BUILDING WITH SMOKE CONTROLS IF THE BUILDING HAS MULTIPLE GENERATORS. DELETE THIS ARTICLE IF THE BUILDING IS NOT A HIGH RISE AND IF IT DOES NOT HAVE SMOKE CONTROLS.

M. Provide engine-generator and ATS manual start and transfer features for installation in the Fire Command Center as required by the Michigan Building Code.

1. Provide one two-position, "Auto-Run" selector switch with one contact per ATS to manually initiate an engine-generator start and ATS transfer. In the "Auto" position, each ATS shall be in normal stand-by mode. In the "Run" position, each ATS shall simulate a loss of normal power. This shall cause each ATS to start the generator(s) and transfer to generator power when its generator is ready.
2. Provide a green "normal power" and a red "generator power" indicating light for each ATS to indicate the position of the ATS. Label each pair of lights to indicate the generator and ATS equipment numbers and the types of loads connected to the ATS.

DELETE 3 WHEN EXISTING ATSs ARE BEING CONNECTED TO THE SYSTEM.

3. In lieu of providing one "Auto-Run" selector switch and multiple green and red indicating lights, one ATS remote annunciator may be provided. The annunciator shall be from the same manufacturer as the ATSs. It shall include means to manually start the engine-generator and transfer all ATSs, and a green "normal power" and a red "generator power" position indicating light for each ATS.

DELETE THIS ARTICLE IF NOT APPLICABLE. IF A LOAD BANK IS TO BE PROVIDED, SHOW ON THE PLAN DRAWINGS THE DIRECTION OF EXHAUST AIR FLOW.

2.8 LOAD BANK

A. Provide a self-contained resistive load bank suitable for permanent installation outdoors. The load bank shall be rated for 100 percent of generator output at unity power factor, and shall include the following:

1. A weather protective, thermostatically controlled heated housing for contactors and other control components.
2. A heavy-duty blower with integral blower motor.

EDIT 3 TO INDICATE THE DIRECTION OF AIR EXHAUST.

3. Fixed louvers on exhaust openings capable of exhausting air upward as shown on the Drawings.
4. Corrosion resistant chromium alloy wire resistors.
5. Branch circuit fusing on all load steps.
6. 480V - 120V control power transformer.
7. Load dump circuit to disconnect the load bank automatically upon loss of normal utility power.
8. Remote control panel integral to the load bank enclosure and including the following:
   a. Control power on-off switch.
   b. Control power light.
   c. Blower power light.
   d. Air failure light.
   e. Master load on-off switch.
   f. Load step on-off switches.
   g. Digital multi-function meter displaying instantaneous voltage, current, power or frequency for all 3 phases.

DELETE THIS ARTICLE IF LOAD BANK IS BEING PROVIDED.

2.9 LOAD CONNECTION BOX

A. Provide a generator output circuit breaker or generator bus tap located in a connection box for connection of cables to a portable load bank. Size the circuit breaker or bus tap for 100 percent full load current of the generator. Box shall have a grommeted opening sized for the cables and a cover capable of being closed while the cables are connected.

2.10 SOURCE QUALITY CONTROL

A. Before shipment of the equipment, factory test the engine-generator under rated load and power factor for performance and proper functioning of controls and interfacing circuits. Tests shall include:

1. Proper operation of controls, indicators and safety shutdowns.
2. Single step load pick-up per NFPA 110.
3. Compliance with the specified transient and steady state voltage and frequency requirements.
4. Provide a certified factory test report.

PART 3 - EXECUTION

3.1 INSTALLATION

A. Maintain Code and manufacturer defined working clearance around the generator and automatic transfer switches.

SHOW ON THE PLAN DRAWINGS THE ORIENTATION OF ENGINE-GENERATOR.

B. Install engine-generator on grillage or concrete housekeeping pad as shown with sound isolation pads or springs between mounting surface and generator.

C. Install and orient exhaust pipe rain flapper cap with hinge toward the southwest.

D. Set timers, overcurrent protective devices, and other items needing to be set in accordance with the design documents and manufacturer's directions.

3.2 CONNECTIONS TO REMOTE EQUIPMENT

DELETE ITEMS THAT DO NOT APPLY.

A. Install the following remote equipment where shown on the Drawings and connect them with wire in conduit to the engine-generator system.

1. Engine-generator emergency stop station.
2. Engine-generator remote annunciator.
3. Engine-generator remote "auto-run" switch and ATS status indicators in Fire Command Center.
4. Load bank.

B. Provide control circuits from the ATSs and fire pump controller to start the engine-generator.

C. Provide control circuits from the engine-generator and ATSs to BAS to provide "generator running", "generator trouble", and ATS "on generator power" alarms.

D. Provide control circuits from the soft-loading ATS to its normal power and generator power feeder breaker shunt trip coils. Utilize engine-generator starter battery power to energize the coils.

E. Provide 120 Volt control and miscellaneous power to engine-generator and automatic transfer switch auxiliaries to insure proper operation. Update panel directories and install labels indicating the sources on the auxiliary equipment.

3.3 SYSTEM STARTUP

A. Coordinate with the Plant Operations Call Center at (734) 647-2059 before starting up or testing engine-generators or automatic transfer switches.

B. Notify OSEH at (734) 647-1143 before starting up engine-generators.

C. Prior to any testing, perform visual inspections to verify the following:

1. The equipment is completely and properly installed.
2. The equipment is free from damage and defects.
3. Shipping blocks and restraints have been removed.
4. Electrical terminations have been properly tightened.
5. The equipment has been properly aligned.
6. The equipment has been properly lubricated.
7. The ventilation louvers are open and unobstructed.
8. The equipment is ready to be tested.

D. Perform a continuity check and 1,000 Volt DC Megger test on the generator windings, generator circuit breakers, power circuit portions of the automatic transfer switch, and interconnecting power circuit wiring.

E. Perform a continuity check on the control wiring.

F. Calibrate the metering and time delay relays.

G. Provide a factory-trained technician to check and perform an initial startup of the engine-generator and automatic transfer switches.

H. The manufacturer’s representative shall provide a certificate in writing that the equipment installation and operation meets their requirements and the project design criteria.

3.4 ENGINE-GENERATOR SYSTEM FIELD TESTING

A. Perform a load bank test of the overall system using a resistive load bank or soft-loading automatic transfer switch rated at 100 percent of generator full load for at least 120 minutes.

B. Test the completed engine-generator system in accordance with NFPA 110 and Manufacturer's written instructions.

1. Open normal power to each automatic transfer switch and observe proper operation of engine-generator and automatic transfer switch (throwing over to emergency power), noting engine-generator start, time delays and other appropriate variables.
2. Restore normal power and observe proper transfer back to normal power and proper shutdown of engine-generator, again noting time delays and other appropriate variables.
3. Operate maintenance bypass switch to ensure proper operation in all modes.
4. Demonstrate each automatic transfer switch in each mode of operation.
5. Demonstrate the automatic test function.

C. Test the operation of engine-generator control and alarm connections to the automatic transfer switches, remote annunciator, Fire Command Center, BAS system and accessories under all operating conditions.

DELETE D IF THE ENGINE-GENERATOR BEING PROVIDED IS FACTORY CERTIFIED AS COMPLIANT WITH EPA EMISSIONS STANDARDS.

D. When the engine is not factory certified as compliant with EPA emissions standards, make all modifications and adjustments necessary to obtain field certification.

3.5 COMMISSIONING

A. Perform the commissioning activities per Related Sections.

3.6 TRAINING

A. Provide a qualified service technician from the Manufacturer's staff to provide training.

REVISE TRAINING REQUIREMENTS IN THE ARTICLE BELOW TO BE PROJECT SPECIFIC. SAMPLE TRAINING LANGUAGE IS PROVIDED, EDIT TO SUIT

PRODUCT OR SYSTEM, INCLUDING DURATION. TRAINING IS NOT REQUIRED UNLESS THE PRODUCT OR SYSTEM IS COMPLEX, UNIQUE, OR NEW TO THE U-M PLANT MAINTENANCE DEPARTMENT. BECAUSE OF THE COST INVOLVED IN TRAINING DO NOT INDISCRIMINATELY SPECIFY TRAINING

B. Provide the Owner's personnel with training on equipment operation, start-up and shutdown, trouble-shooting, servicing and preventative maintenance procedures of the engine-generator, automatic transfer switches and accessories. Do not conduct training until after start up and commissioning is completed. Provide training documents and the approved Operations and Maintenance manuals to the Owner at least two weeks prior to the training to allow sufficient time for review.

1. Provide a minimum of 4 hours of training on the engine-generator.
2. Provide a minimum of 4 hours of training on the automatic transfer switches.

END OF SECTION 263000

UNIVERSITY OF MICHIGAN
ARCHITECTURE, ENGINEERING AND CONSTRUCTION

ARCHITECTURE & ENGINEERING
326 East Hoover, Mail Stop B
Ann Arbor, MI 48109-1002
Phone: 734-764-3414
Fax: 734-936-3334

BuildingName
The Description of the Project
P00000000 0000

SPECIFICATION DIVISION 26

NUMBER SECTION DESCRIPTION

DIVISION 26 ELECTRICAL
SECTION 265100 - INTERIOR LIGHTING

END OF CONTENTS TABLE

DIVISION 26 ELECTRICAL
SECTION 265100 - INTERIOR LIGHTING

PART 1 - GENERAL

1.1 RELATED DOCUMENTS

A. Drawings and general provisions of the Contract, Standard General and Supplementary General Conditions, Division 1 Specification Sections, and other applicable Specification Sections, in particular the Related Sections listed below, apply to this Section.

B. Related Sections:

1. Section 017823 - Operation and Maintenance Manual
2. Section 019100/019110 - Commissioning
3. Section 260513 - Medium, Low & Control Voltage Cables
4. Section 260526 - Grounding and Bonding for Electrical
5. Section 260533 - Electrical Materials and Methods
6. Section 260800 - Electrical Acceptance Tests

1.2 DEFINITIONS

A. Night Lights: Light fixtures that are wired to the unswitched leg of the circuit. Night lights are not to be confused with emergency lights, which have a second source of power and may be switched.

1.3 SUBMITTALS

A. Product Data: Arrange in order of luminaire designation. The submittals shall include data on features, ratings, listings, certifications, accessories, finishes, dimensions, emergency components, photometric data, and luminaire efficiency data.

B. Installation, Operation, and Maintenance Manuals.

1.4 QUALITY ASSURANCE

A. Lighting fixtures shall be of specification grade and listed or labeled by Underwriters Laboratories (UL) or an approved Nationally Recognized Testing Laboratory (NRTL).

B. LED fixtures shall comply with the following:

1. UL Standard 8750 “Light Emitting Diode Equipment for Use in Lighting Products”, IES Standard LM-79 “Electrical and Photometric Measurements of Solid-State Lighting Products”, IES Standard LM-80 “Measuring Lumen Maintenance of LED Light Sources”, and IES Standard TM-21 “Projecting Long Term Lumen Maintenance of LED Light Sources”.
2. ANSI C78.377 “Specifications for the Chromaticity of Solid State Lighting Products” with LEDs binned within a maximum three-step MacAdam Ellipse to ensure color consistency amongst luminaries of the same type.

1.5 WARRANTY

A. For non-LED lighting fixtures and components, provide a complete warranty for parts and labor for a minimum of one year from the date of Substantial Completion.

B. For LED fixtures, lamps, drivers, and components, provide a complete warranty for parts and labor for a minimum of five years from the date of Substantial Completion.

PART 2 - PRODUCTS

2.1 LIGHTING FIXTURES

A. Provide lighting fixtures in accordance with the Fixture Schedule.

1. Provide only LED fixtures with a DesignLights Consortium (DLC) listing, a U.S. Department of Energy (DOE) "LED Lighting Facts" label, or a U.S. Environmental Protection Agency (EPA) ENERGY STAR label, which have demonstrated third-party testing verification.

B. Recessed lighting fixtures shall be thermally protected.

C. LED fixtures shall be modular and allow for separate replacement of LED lamps and drivers. User serviceable LED lamps and drivers shall be replaceable from the room side.

D. Dimmable LED fixtures shall have either a 0-10 volt, 3-wire dimming driver, or a two-step (50%-100%) line voltage, two switch controlled dimming driver, as shown on the drawings.

2.2 LAMPS

A. Except where T5 or T5HO lamps are shown in the Fixture Schedule, tubular fluorescent lamps shall be T8, straight tube, rapid-start, multi-phosphor type with a medium bi-pin base, average rated life of 24,000 hours minimum, 3,000 initial lumens, and 2,820 mean lumens. Fluorescent lamps shall have a correlated color temperature of 3500 degrees K and a CRI of 85 minimum. Lamps shall be designed to pass the Federal TCLP test in effect at the time of manufacture. U-tube lamps shall not be used. GE Ecolux, Osram/Sylvania Ecologic, or Philips Alto only.

B. Compact fluorescent lamps shall be 4 pin, 13 watt minimum with a color temperature of 3500 degrees K, a CRI of 80 minimum, end-of-life protection, and suitable for use with electronic ballasts. Self-ballasted compact fluorescent lamps are not acceptable except for retrofitting existing incandescent fixtures. Osram/Sylvania, GE, or Philips only.

C. Induction lamps shall have a color temperature of 3500 degrees K and a CRI of 80 minimum.

D. LED lamps shall have a color temperature of 3500 degrees K, a CRI of 80 minimum, and a lumen maintenance L70 rating of 50,000 hours minimum.

E. Retrofit LED lamps shall comply with NEMA SSL 4 "SSL Retrofit Lamps: Suggested Minimum Performance Requirements".

F. High intensity discharge (H.I.D.) lamps shall conform to their applicable ANSI codes.

G. Incandescent lamps shall be rated 120 volts and shall have a life of 2,000 hours minimum. Standard "A" Type lamps shall be inside frosted.

2.3 BALLASTS AND DRIVERS

A. Except where indicated otherwise, fluorescent fixtures with multiple T8 or T5 lamps shall have two ballasts or a two-step (50%-100%) dimming ballast to accommodate dual switching. Fluorescent fixtures with multiple compact fluorescent lamps may have one ballast.

B. Fluorescent ballasts shall be of the electronic, programmed rapid-start, series-circuited, and completely solid-state. Ballasts shall be rated for the specific lamps they are supplying, shall have a maximum crest factor of 1.6, a maximum current total harmonic distortion of 10 percent, a minimum starting temperature of 0 degrees F, and a sound rating of "A". Ballasts for T8 and T5 lamps shall be Osram/Sylvania Quicktronic Professional, Advance Optanium, or Universal Accustart only. Ballasts for compact fluorescent lamps shall be the fixture manufacturer's standard electronic type.

C. Fluorescent dimming ballasts shall be electronic, comply with the other requirements for electronic ballasts, be capable of smoothly and consistently dimming the lamps from full output to 10 percent or less output, and maintain a cathode voltage between 3 to 4 volts. A low voltage slide switch that is compatible with the ballast shall control light level. Osram/Sylvania Quicktronic, Lightolier, or Lutron only.

D. LED drivers shall be electronic-type, labeled as compliant with radio frequency interference (RFI) requirements of FCC Title 47 Part 15, and comply with NEMA SSL 1 "Electronic Drivers for LED Devices, Arrays, or Systems". LED drivers shall have a sound rating of "A", have a minimum efficiency of 85%, and be rated for a THD of less than 20 percent at all input voltages.

E. Dimmable LED drivers shall be 0-10V type. Dimmable LED drivers shall be capable of dimming without LED strobing or flicker across their full dimming range.

F. H.I.D. ballasts shall conform to their applicable ANSI codes. H.I.D. ballasts for use indoors in finished areas shall be of the quietest type available or shall be mounted remote from the fixtures.

G. Ballasts and drivers shall be rated for the ambient temperatures in which they are located. Outdoor fixtures shall be equipped with ballasts or drivers rated for reliable starting to -20 degrees F. Indoor fixtures located in areas with direct sunlight or above normal ambient temperatures shall have ballasts or drivers rated at 65 degrees C minimum.

H. Individually fused ballasts and drivers shall have their fuses accessible from outside of the fixture chassis.

I. Induction lamp drivers shall be electronic and comply with radio frequency interference (RFI) requirements of FCC Title 47 Part 15 and be rated for a total harmonic distortion (THD) of less than 20 percent at all input voltages.

2.4 EMERGENCY LIGHTING

A. Emergency lighting shall consist of normal lighting fixtures with generator or battery-inverter system backup, emergency lighting fixtures with individual battery backup, or sealed beam emergency lighting units in accordance with the Fixture Schedule.

1. Battery-backed fluorescent emergency lighting fixtures shall consist of a fluorescent fixture with one or more lamps connected either to a battery pack and charger mounted remote from the fixture, or to an emergency power ballast mounted internal to the fixture. Minimum light output shall be 1100 lumens. The battery shall be nickel cadmium and sized for a minimum of 90 minutes of fixture operation. The charger shall be solid-state and provide overload, short circuit, brownout and low battery voltage protection. The battery and charger shall include self-diagnostic and self-exercising circuitry to exercise and test itself for 5 minutes every month and for 30 minutes every 6 months. The fixture shall include a test/monitor module with LED status indicating lights mounted so as to be visible to the public. The fixture shall not contain an audible alarm.
   a. Remote mounted battery packs and chargers: Chloride, Dual-Lite, Emergi-Lite, Exide Lightguard, Lightalarms, Lithonia or Sure-Lites.
   b. Emergency power ballasts: Bodine or Lithonia
2. Battery-backed LED emergency lighting fixtures shall consist of a normal LED fixture with some or all of the LEDs connected to a battery and charger. The battery shall be nickel cadmium and sized for a minimum of 90 minutes of fixture operation. The charger shall be solid-state and provide overload, short circuit, brownout and low battery voltage protection. The battery and charger shall include self-diagnostic and self-exercising circuitry to exercise and test itself for 5 minutes every month and for 30 minutes every 6 months. The fixture shall include a test/monitor module with LED status indicating lights mounted so as to be visible to the public. The fixture shall not contain an audible alarm.

3. Sealed beam emergency lighting units shall consist of sealed beam LED lamps connected to an internally mounted battery and charger. The battery shall be nickel cadmium and sized for a minimum of 90 minutes of battery operation. The charger shall be solid-state and provide overload, short circuit, brownout and low battery voltage protection. The unit shall be suitable for wall or ceiling mounting as required. It shall include self-diagnostic and self-exercising circuitry to exercise and test itself for 5 minutes every month and for 30 minutes every 6 months. The unit shall include a test/monitor module with LED status indicating lights mounted so as to be visible to the public. The unit shall not contain an audible alarm.

2.5 EXIT SIGNS

A. Exit signs shall be of the LED type. Fluorescent, electro luminescent light panel, or self-powered luminous signs shall not be used. Chloride, Dual-Lite, Emergi-Lite, Exide Lightguard, Lightalarms, Lithonia, LSI Industries, Morelite, Prescolite, or Sure-Lites.

1. LED’s shall be wired in parallel to prevent multi-lamp failure, and shall be concealed within the sign by a clear panel and red optical diffuser. Power consumption shall not exceed 2 watts per face.
2. Exit signs shall have white die cast aluminum or polycarbonate housings with universal mounting brackets; brushed aluminum stencil faces with red letters and multi-directional knockout arrows.
3. Exit signs shall be provided with emergency battery packs and battery chargers when required. Batteries shall be maintenance-free nickel cadmium, and shall be mounted within the signs.

PART 3 - EXECUTION

3.1 INSTALLATION REQUIREMENTS

A. Support recessed troffers independently of the ceiling grid system by using two safety wires minimum on diagonally opposite corners of the fixtures. Support recessed downlights by using safety wires or by rigidly attaching the fixtures to the building structure or ceiling grid system. Removable T-bar clips shall not be used to attach fixtures to the ceiling grid system.

B. Install fixtures level, with no gaps between adjacent fixtures or between fixtures and surrounding surfaces. Lenses, reflectors, and trims of fixtures shall be properly and uniformly aligned.

C. Where fixtures are shown with dual switches, control all inner lamps with one switch and all outer lamps with the other switch. Where dimming or occupancy sensor-controlled fixtures are shown, control the fixtures in accordance with the appropriate wiring diagram or manufacturer's instructions.

D. Connect night light fixtures and emergency lighting fixtures to the hot (unswitched) side of lighting circuits.

E. Provide an individual feed with ground conductor from a junction box to each lighting fixture. Lighting fixtures shall not be daisy-chained.

F. Drops to recessed fixtures may be flexible metallic conduit, or manufactured wiring systems may be used where accessible. Fixtures shall be provided with sufficient length to permit removal and lowering of the fixtures 12” below the ceiling.

G. Provide green grounding conductors back to the panel ground for lighting circuits. Raceways shall not be used as grounding conductors.

H. Fixtures shall have their exterior labels removed and shall be thoroughly cleaned. Burned out lamps shall be replaced.

I. Locate emergency lighting remote battery packs and remote test/monitor modules identically so their status indicating lights are visible to the public and they form a straight line when viewed from the end of the corridor or room. Where a suspended ceiling exists, center the status indicating lights in adjacent ceiling tiles.

J. Mount sealed beam emergency lighting units where shown and aim their lamps to light the egress path as uniformly as possible.

K. When emergency lighting fixtures contain audible alarms, disable the alarms in accordance with manufacturer's instructions.

3.2 FIELD QUALITY CONTROL

A. A visual inspection shall be performed to verify cleanliness and alignment of the fixtures. Misalignment and light leaks shall be corrected, and rattles due to ventilation system vibration shall be eliminated.

B. Perform an operational test to verify that all fixtures illuminate properly, dimming systems dim properly (i.e. no flicker), and lighting zones are switched according to the drawings.

3.3 COMMISSIONING

A. Perform Commissioning activities per Related Sections above.

3.4 TRAINING

A. Provide a qualified service technician from the Manufacturer's staff to provide training.

B. Train Owner's maintenance personnel on equipment operation, start-up and shutdown, trouble-shooting, servicing, and preventative maintenance procedures. Review the data contained in the Operating and Maintenance Manuals with Owner's personnel. Training shall occur separate from startup activities.

1. Provide 2 hours of on-site training minimum.

END OF SECTION 265100

UNIVERSITY OF MICHIGAN
ARCHITECTURE, ENGINEERING AND CONSTRUCTION

ARCHITECTURE & ENGINEERING
326 East Hoover, Mail Stop B
Ann Arbor, MI 48109-1002
Phone: 734-764-3414
Fax: 734-936-3334

BuildingName
The Description of the Project
P00000000 0000

SPECIFICATION DIVISION 26

NUMBER SECTION DESCRIPTION

DIVISION 26 ELECTRICAL
SECTION 265600 - EXTERIOR LIGHTING

END OF CONTENTS TABLE

DIVISION 26 ELECTRICAL
SECTION 265600 - EXTERIOR LIGHTING

PART 1 - GENERAL

1.1 RELATED DOCUMENTS

INCLUDE PARAGRAPH 1.1.A AND B IN EVERY SPECIFICATION SECTION. EDIT RELATED SECTIONS 1.1.B TO MAKE IT PROJECT SPECIFIC.

A. Drawings and general provisions of the Contract, Standard General and Supplementary General Conditions, Division 1 Specification Sections, and other applicable Specification Sections, in particular the Related Sections listed below, apply to this Section.

IN 2 BELOW, SELECT PROPER COMMISSIONING SPEC SECTION NUMBER APPLICABLE TO THE PROJECT.

B. Related Sections:

1. Section 017823 - Operation and Maintenance Manual
2. Section 019100/019110 - Commissioning
3. Section 260513 - Medium, Low & Control Voltage Cables
4. Section 260526 - Grounding and Bonding for Electrical
5. Section 260533 - Electrical Materials and Methods
6. Section 260800 - Electrical Acceptance Tests

1.2 SUMMARY

VERIFY THE LIGHTING DRAWINGS CONTAIN ALL APPLICABLE LIGHTING FIXTURE SCHEDULES AND STANDARD DETAILS.

A. Section Includes:

1. Provide all equipment and materials required for pedestrian (security), roadway, and parking lot outdoor lighting as shown on the Drawings.

B. Prior to construction activities, contact the Owner’s Utilities Power & Lighting Shop at 734-647-2049 to coordinate project parameters.

C. Refer to the fixture schedule and details on the Drawings for information on the fixtures, poles, and accessories.

1.3 ADMINISTRATIVE REQUIREMENTS

A. Contact MISS DIG at 1-800-482-7171 or 811 before performing any excavation work.

B. Provide barricades around open holes and trenches. Provide temporary bridges over trenches cut through major sidewalk routes. Major sidewalk routes shall not be closed to pedestrian traffic.

C. Contact the Owner’s Electrical Inspectors at 734-764-2457 for inspections before backfilling excavations and before energizing circuits.

D. For maintenance or repairs to existing lighting systems, contact Utilities Power & Lighting Shop at 734-647-2049.

1.4 SUBMITTALS

A. Lighting equipment specifications and manufacturer cut sheets, including:

1. Luminaire types, descriptions, dimensions, optics, materials, finishes, and photometric data.
2. Pole or mounting support descriptions, dimensions, materials, and finishes.
3. For each luminaire, lamp type, lamp wattage, delivered lumen output, color temperature, color rendering index, and related life.

B. Shop Drawings: Include plans, elevations, sections, details, and attachments to other work.

1. Detail equipment assemblies and indicate dimensions, weights, loads, required clearances, method of field assembly, components, and location and size of each field connection.

C. Submit marked up as-built drawings showing the actual locations of lighting poles, sleeves and junction boxes, circuit numbers for all loads, and all deviations from the design. Dimension the locations of sleeve ends, conduits, and junction boxes from a permanent building or landscape feature.

1.5 QUALITY ASSURANCE

INCLUDE PARAGRAPHS A AND B IN EVERY SPECIFICATION SECTION. EDIT THE REFERENCE STANDARDS FOR PROJECT REQUIREMENTS.

A. Manufacturers and Products: The products and manufacturers specified in this Section establish the standard of quality for the Work. Subject to compliance with all requirements, provide specified products from the manufacturers named in Part 2.

B. Reference Standards: Products in this section shall be built, tested, and installed in compliance with the specified quality assurance standards; latest editions, unless noted otherwise.

1. IEEE C2, National Electrical Safety Code.
2. NFPA 70; National Electrical Code.
3. MDOT Standard Specifications for Construction.
4. AASHTO, American Association of State Highway and Transportation Officials
5. Aluminum Association Standards.

C. Electrical Components, Devices, and Accessories: Listed and labeled as defined in NFPA 70, by a qualified testing agency, and marked for intended location and application.

1.6 WARRANTY

A. Provide a complete parts and labor warranty for a minimum of one year from the date of Substantial Completion.

PART 2 - PRODUCTS

2.1 PEDESTRIAN LIGHTING

A. Fixtures

FOR EXTERIOR APPLICATIONS, THE UNIVERSITY IS TRANSITIONING TO LED LIGHTING ONLY. PROVIDE LED FIXTURES FOR NEW OR RENOVATED INSTALLATIONS. REQUEST DESIGN MANAGER APPROVAL BEFORE DESIGNING WITH METAL HALIDE, FLUORESCENT, OR OTHER NON-LED SOURCES.

1. Fixtures shall be Philips Lumec "New Westminster" (NW) Series only.
2. Fixtures shall be of the round globe type, suitable for mounting singly or in multiples on round, tapered aluminum poles.
3. Globes shall be 20-inch diameter and made of clear acrylic with a partially obscure, non-diffusing finish.
4. The lower half of each globe shall be guarded by a cast aluminum, 6-spoke basket that supports a 2-inch-wide horizontal aluminum band around the luminous center of the globe.
5. Fixtures shall be equipped with an electronic driver with a high power factor of 90% minimum. The driver shall have an ambient temperature operating range from minus 40 degrees F to 130 degrees F. The driver output shall provide protection from short circuits, voltage overload, and current overload. The driver shall have a nominal life of 100,000 hours. The LED source and driver shall be wired with a polarized quick disconnect plug to permit removal for maintenance.
6. Fixtures shall be equipped with 4000 degrees K LED lamps, having a nominal output of 6,020 delivered lumens for single globe fixtures, or 4,090 delivered lumens for each globe in a multiple-globe fixture, and an L70 nominal life of 70,000 hours. Lamps shall be Philips Lumileds Luxeon R only.

B. Poles

1. Poles shall be of the round, tapered, aluminum type. Pole height shall be in accordance with the Lighting Fixture Schedule.
2. Poles shall be of one-piece construction with a 0.120-inch minimum wall thickness, a 5-inch diameter at the base, and a 4-inch diameter maximum at the top. Any longitudinal welds shall be ground flush and unnoticeable.
3. Poles shall include a base plate 5/8-inch minimum thick. The base plate shall be continuously welded both top and bottom (or inside and outside) to the pole base.
4. Pole base plates shall have four slots suitable for installing over four 3/4-inch diameter anchor bolts set in a 9-1/2 inch diameter bolt circle pattern.
5. Poles shall include a reinforced 2-inch by 4-1/2-inch handhole located in the base. The handhole shall include a gasketed cover plate that is firmly held in place by two 1/4"-20 stainless steel cap screws. Provide an internal ground lug, which shall be located on the handhole side of the pole.
6. Poles shall be mechanically cleaned and painted with a black polyester powder coat outside to match the light fixtures.
7. Each pole shall include a one-piece, decorative, cast aluminum base bolt cover painted to match the pole.

8. The poles shall be from the same supplier as the lighting fixtures.

C. Anchor bolts for pedestrian lighting fixtures shall be 3/4-inch diameter by 20 inches long with a 3-inch "L", fully hot dip galvanized steel having a yield strength of 36,000 psi, each with two hot dip galvanized fender washers and hex nuts.

D. Wall-mounted

1. Fixtures shall be similar to above, Philips Lumec "New Westminster" NW-M Series only.

E. Column mounted fixture bases shall be fabricated from aluminum pipes and plates in accordance with the Drawings, and they shall be painted to match the lighting fixtures.

PART 2 -

2.1

2.2 ROADWAY AND PARKING LOT LIGHTING

A. Fixtures

COORDINATE ALL ROADWAY AND PARKING LOT LIGHTING FIXTURE PROJECTS WITH THE DESIGN MANAGER AND PROJECT TEAM, WHICH MAY INCLUDE UTILITIES POWER & LIGHTING, PARKING & TRANSPORATION SERVICES, EXTERIOR ELEMENTS DESIGN REVIEW, AS WELL AS THE PROJECT'S FUNDING UNIT (I.E. ATHLETICS, HOUSING, HOSPITAL). AT THE TIME OF THIS PUBLICATION, LITHONIA DSX1 IS PROPOSED FOR PARKING LOT APPLICATIONS AND AMERICAN ELECTRIC LIGHTING AUTOBAHN ATB2 SERIES FOR COBRAHEAD APPLICATIONS.

1. Fixtures shall be Lithonia Lighting DSX1 Series only. Fixtures shall be low-profile type with LED lamps, suitable for mounting singly or in pairs on round, tapered, aluminum poles. Unless noted otherwise in the Fixture Schedule, the fixtures shall have Type III Medium light distribution.
2. Fixture housings shall have a gullwing profile, nominally 33 inches long by 13 inches wide by 7 inches high. The housings shall be single-piece, die-cast aluminum with integral heat sink fins.
3. Fixtures shall be equipped with an electronic driver with a power factor greater than 90 percent, THD less than 20 percent, and an expected life of 100,000 hours. Electronic drivers shall have an easily serviceable 10kV surge protection device. Provide a locking-type, 7-pin plug, in compliance with ANSI C136.41, to permit removal for maintenance. Provide a shorting cap.
4. Light engines shall consist of high-efficacy LED lamps with precision-molded acrylic lenses and rated at 4000 degrees K and a minimum of 70 CRI. The optics shall have zero uplight component. The light engines shall be modular for ease of maintenance and future light engine upgrades. Fixtures on 30'-0" poles shall have a nominal delivered lumen output of 20,000. The lumen maintenance factor shall be 0.88 minimum at 100,000 hours (tested per LM-80-08 and projected per TM-21-11).
5. The finish shall be a black, zinc-infused thermoset powder coat finish, with a minimum 3 mils thickness.

6. Fixture housings shall mount directly to poles with integral arms.
7. Fixtures shall be UL 1572 Listed as suitable for wet locations and shall be rated for -40 degree F minimum ambient temperature.

B. Poles

1. Provide tapered aluminum poles as follows:
   a. For 12 foot tall poles, Valmont Model 1108-30506T4L or Acuity RTA-12-8J-DMXX-DART-ABL-AB36-0-FULL-GALV.
   b. For 20 foot tall poles, Valmont Model 1908-40705T4 or Acuity RTA-20-8J-DMXX-DART-ABL-AB36-0-FULL-GALV.
   c. For 25 foot tall poles, Valmont Model 2408-45806T4 or Acuity RTA-25-8J-DMXX-DART-ABL-AB36-0-FULL-GALV.
   d. For 30 foot tall poles, Valmont Model 2908-45808T4 or Acuity RTA-30-8J-DMXX-DART-SPCL-TAPER-ABL-AB36-0-FULL-GALV.
2. Poles shall be of the round, tapered, aluminum type. Poles shall be of seamless, one-piece construction with a uniform taper of approximately 0.14 inches per foot from base to top. The poles shall be of the heights shown on the Drawings.
3. Poles shall be 6063 alloy aluminum, 0.250-inches thick, and heat treated to achieve a T6 temper, having a yield strength of 50,000 psi minimum and an ultimate tensile strength of 65,000 psi minimum.
4. Poles shall be rated for a continuous wind of 80 MPH plus a gust factor of 1.3 per AASHTO, an Effective Projected Area (EPA) of 20.0 minimum, and a fixture load of 400 pounds minimum.
5. Poles shall include a base plate of A356 alloy aluminum, 1-inch minimum thick, and heat treated to achieve a T6 temper, having a minimum yield strength of 36,000 psi. Base plate shall be continuously welded both top and bottom (or inside and outside) to the base of the pole.
6. Pole base plates shall have four slots suitable for installing over four 1-inch diameter anchor bolts set in an 11-inch diameter bolt circle pattern.
7. Poles shall include a reinforced 4-inch by 6-inch handhole located in the base. The handhole shall include a gasketed cover plate that is firmly held in place by two 1/4”-20 stainless steel cap screws. Provide an internal ground lug, which shall be located on the handhole side of the pole.
8. Poles shall be mechanically cleaned, and either plastic resin coated or polyester powder coated inside over their entire length. Poles shall be painted with a black polyester powder coat outside to match the specified light fixtures.
9. Each pole shall be provided with a 5/16 inch-18 tapped provision for a ground connector.

C. Anchor bolts for roadway and parking lot lighting shall be 1-inch diameter by 36-inches long with a 4-inch “L”, fully hot dipped galvanized steel having a yield strength of 36,000 psi. Each bolt shall be provided with two hot dipped galvanized fender washers and hex nuts.

D. Provide Valmont Base Cover, "Dart Square – 2T" Model or equivalent by Acuity, made of A356 alloy aluminum and finished to match the pole. The cover shall be a single unit, installed in two pieces, covering all four nuts and the base plate. Pieces shall be held together and anchored to the pole base with stainless steel set screws.

2.3 BANNER ARMS

A. Banner arms shall be provided by the banner supplier and are not the responsibility of the pole supplier.

B. Banner arms shall be 6061 cast aluminum, heat treated to a T6 temper, welded to the arm base plate. Banner arm length (banner width) shall be 24 inches maximum for pedestrian light poles and 30 inches maximum for roadway light poles as indicated in the University Banner Guidelines.

1. Top banner arms for pedestrian light poles shall be Valmont "BannerSaver" Model, break-away type with self-restoring feature. The break-away/self-restoring hardware shall be welded directly to the arm base plate.
2. Top banner arms for roadway light poles shall be either Valmont non-break-away type or Valmont "BannerSaver" Model, break-away type with self-restoring feature. The non-break-away arm, or the break-away/self-restoring hardware, shall be welded directly to the arm base plate.
3. Bottom banner arms for all poles shall be Valmont "BannerSaver" Model, break-away type with self-restoring feature. The break-away/self-restoring hardware shall be welded directly to the base plate.
4. Banner arm base plates shall be anchored to the poles with adjustable aluminum compression straps or aluminum clamps, finished to match the poles. Arms and straps/clamps shall be removable without any damage to the pole or to its finish. Drilling of any holes for banner arm or hardware attachment is not allowed.
5. End caps for banner arms shall be A356 alloy aluminum, standard type, attached to the arm per manufacturer's standards.
6. Mounting heights of the bottom arms shall be 13 feet clear above the pole base on street light poles, and 6 feet 8 inches minimum clear above grade on pedestrian light poles.

2.4 CONCRETE

A. Concrete for lighting pole and emergency telephone kiosk bases shall be 6 bag minimum mix, with aggregate not exceeding 3/4 inch, 3,000 psi minimum compressive strength after 28 days, air content minimum 5 percent and maximum 7 percent.

2.5 RACEWAYS

A. Conduits indoor, in general areas, shall be electrical metallic tubing (EMT) with steel set screw fittings.

B. Conduits outdoors (except where galvanized rigid steel is shown on the drawings) shall be Schedule 40 PVC with matching fittings, UL Labeled for use with 90 degrees C cables. Acceptable manufacturers:

1. Cantex.
2. Carlon
3. National Pipe & Plastic.

C. Sleeves for underground outdoor lighting and irrigation installations shall be 6" Schedule 40 PVC, UL Labeled for use with 90 degrees C cables. Acceptable manufacturers:

1. Cantex.
2. Carlon.
3. National Pipe & Plastic.

D. Junction boxes shall be pre-cast polymer concrete or polymer foam, heavy-duty rated, one size larger than required by the NEC, bottomless, with a single piece cover engraved "UM Outside Lighting" and attached with pentahead stainless steel bolts. Provide metal barriers in junction boxes containing circuits of two different voltages or containing both power and telephone circuits. Acceptable manufacturers:

1. Carson-Brooks.
2. CDR Systems.
3. Quazite.

E. Marking tape shall be plastic, vinyl, or Mylar, 6-inches wide, red for electrical power circuits and orange for telephone circuits, and labeled to indicate the type of circuit buried below.

2.6 WIRING

A. Wire and cable for general indoor use shall be single conductor stranded copper with Type THHN insulation rated 90 degrees C, 600 volts.

B. Wire for use outdoors shall be single conductor stranded copper with Type XHHW insulation rated 90 degrees C in dry locations and 75 degrees C in wet locations, 600 volts.

2.7 TERMINATIONS

A. Connectors for splicing and terminating lighting conductors within in-grade boxes shall be Homac 3 RAB4 or RAB6 "Flood-Seals" only.

B. Connectors for terminating lighting conductors in poles shall be ILSCO UTILCO SLC4-01-L terminal blocks with ILSCO UTILCO No. R6131 boots.

C. Connectors for terminating lighting conductors in column and wall mounted fixture bases only shall be copper split bolt connectors with full tin-plating. Blackburn 1HPW for No. 3 AWG wire and 4HPW for No. 6 or No.8 AWG ground wire.

2.8 FUSING

A. Fuse holders for lighting fixtures shall be Eaton Bussmann TRON No. HEB-AA in-line, waterproof fuse holders rated 300 volts and 30 amps.

B. Fuses for lighting fixtures (unless shown otherwise on the Drawings) shall be Eaton Bussmann No. KTK-5, rated 5 amps.

2.9 CONTROLS

DDC CONTROL IS THE PREFERRED METHOD OF CONTROL; TIE TO LOCAL BUILDING DDC PANEL. WHERE LOCAL DDC CONTROL IS NOT AVAILABLE, CONSIDER SINGLE PHOTOCELL WITH CONTACTOR CONTROL, OR POSSIBLY ADJACENT BUILDING DDC CONTROL PANEL. STAND-ALONE TIME CLOCKS ARE NOT ALLOWED.

A. Lighting contactors shall be of the voltage and amperage shown, 3-pole, fused disconnect switch type, electrically-held, with a hand-off-auto switch and a 120 volt control power transformer. Lighting contactors located indoors shall be installed in NEMA 1 enclosures, and lighting contactors located outdoors shall be installed in NEMA 3R stainless steel enclosures with pad-lockable doors. Schneider Electric (Square D) Class 8903 only.

2.10 CIRCUIT REQUIREMENTS

A. Unless shown otherwise on the Drawings, provide circuits as follows:

1. Feed parking lot lighting, pedestrian lighting, roadway lighting, emergency telephone kiosks, illuminated signs, and parking lot electric gates and meters all from separate circuits.
2. Feed pedestrian lighting on opposite sides of a roadway or sidewalk from separate circuits.
3. Feed pedestrian, roadway, and parking lot lighting at 277 volts from a 480Y/277 volt, three-phase circuit. Feed emergency telephone kiosks, illuminated signs, and parking lot electric gates and meters at 120 volts.
4. Pedestrian and roadway lighting circuits shall consist of four No.4 AWG conductors plus a No. 8 AWG ground conductor in a 1-1/4” conduit.
5. Emergency telephone kiosk, illuminated sign, and parking lot electric gate and meter power circuits shall consist of two No. 8 AWG and one No. 8 AWG ground conductors in a 1” conduit.
6. Telecommunications conduits to emergency telephone kiosks and parking lot electric gates and meters shall be 1-1/2” minimum and shall include a nylon pull string.

B. Provide a means for expanding the outdoor lighting circuits. Stub out a spare 1-1/4” conduit from each pole base indicated by “STUB SPARE C” on the plan drawings.

2.11 CONTROL REQUIREMENTS

A. Switch the outdoor lighting with lighting contactors where shown. Lighting contactors shall be controlled by normally closed contacts of a Building Automation System DDC control panel (the preferred option whenever DDC is available), or a photocell when DDC is not available. The control circuit shall be wired to energize the lighting upon a failure of the DDC control panel or photocell. Contact the Owner’s Utilities Power & Lighting Shop (734-647-2049) to coordinate connection to a DDC control panel.

B. Where specified in the Lighting Fixture Schedule, provide a photocell on top of each fixture housing.

PART 3 - EXECUTION

3.1 EXAMINATION AND PREPARATION

A. Remove existing pole bases and associated circuiting completely when demolishing existing lighting. Direct buried wiring or underground conduit may be abandoned in place, unless shown otherwise.

B. Where sidewalk sections must be removed for installation of outdoor lighting, remove the sidewalk sections completely from joint to joint.

C. Where asphalt must be removed for installation of outdoor lighting, saw cut the asphalt in two, straight, parallel lines, with clean edges.

3.2 EXCAVATION AND BACKFILL

A. Excavate and maintain trenches according to applicable Safety and Code requirements. Protect existing features.

B. Backfill excavated trenches in accordance with the drawings. Excavated materials may be used to backfill the trench only if the backfill is sand or suitable soil that conforms to Section 312000 Earth Moving backfill material requirements and that is free of rocks and debris over 3/4 inch. Dispose of unsuitable material, clay or rocky excavated material, and replace with MDOT Class II sand.

C. Mark sleeves and conduits for their entire length with a marking tape buried 12 inches above the top of the sleeve or conduit.

D. Backfill excavated trenches in 6-inch layers and mechanically compact to 98 percent compaction.

E. Backfill and mechanically compact holes left by demolished pole bases with MDOT Class II sand or clean dirt to a depth of 6 inches below grade. Backfill the last 6 inches with topsoil.

3.3 SLEEVE INSTALLATION

A. Sleeves shall be buried at a minimum depth of 24 inches to their top. Sleeves shall extend a minimum of 12 inches beyond the pavement they pass under.

B. Sleeves shall be taped closed at both ends with duct tape.

C. Sleeve ends shall be marked with steel stakes, pipes, or conduits that are 3-feet long minimum, driven vertically down at the sleeve ends to a depth of 6 inches below grade to their top.

D. Where lighting and irrigation sleeves are installed adjacent to each other, maintain a minimum of 2 feet between them.

3.4 CONDUIT INSTALLATION

A. Conduit bends shall not be smaller than the radius of standard manufactured elbows, with a minimum bend radius of 12 inches.

B. Install conduits parallel to or at right angles to building lines and site features.

C. Locate underground conduits as close to curbs and sidewalks as possible to avoid interference with future landscaping.

D. Where conduits cannot be installed at a minimum depth of 24 inches, install rigid steel conduits or pour concrete over the conduits in accordance with the NEC.

3.5 JUNCTION BOX INSTALLATION

A. Keep the number of junction boxes to a minimum. Make splices in pole bases wherever possible.

B. Locate junction boxes in mulched areas wherever possible. The top of the junction box shall be level with the existing grade.

C. Install junction boxes on a base of pea gravel or MDOT Class II sand at least 1-foot deep.

3.6 FIXTURE AND POLE INSTALLATION

A. Locate fixture bases on centerlines where centerlines are shown on the Drawings. Install fixtures shown on the Drawings in a straight line.

B. Align pole with handhole away from the sidewalk.

C. Install poles using 2 hot dip galvanized fender washers and 2 hex head nuts on each anchor bolt so that poles can be leveled. Poles shall be plumb. The center band of pedestrian lighting fixtures shall be level.

D. Align pedestrian lighting fixtures so that one spoke of the globe basket is perpendicular to the street, sidewalk, or wall.

E. Provide adequate slack in the pole conductors so that the conductors to the luminaire can be pulled out of the handhole for maintenance. Provide terminal blocks, in-line fuse holders, and wire nuts in accordance with pole wiring details on Drawings.

3.7 GROUNDING

A. Provide a 5/8-inch minimum diameter copper-clad ground rod, 8-inch minimum length, for each light fixture pole.

B. Provide exothermic weld type ground connections or acorn clamps for concealed, underground, and concrete-encased ground connections, and for splices and taps of ground conductors.

C. Provide No. 10 AWG green insulated grounding conductors in lighting fixture poles.

3.8 CONCRETE WORK

A. Install light pole and emergency telephone kiosk concrete bases according to details. Provide specified concrete mix.

B. Exposed portions of light pole and emergency telephone kiosk concrete bases shall be free of voids and honeycombs.

C. Provide a uniform, 1-inch, 45-degree chamfer on all light pole and emergency telephone kiosk concrete bases.

3.9 ADJUSTING, CLEANING, PROTECTION

A. Restore concrete sidewalks and asphalt in accordance with the applicable Division 02 and 03 Sections.

B. Restore lawn areas to Owner's satisfaction, according to the Lawn Repair Section and the Contract Documents. Contact UM Grounds Services at 734-763-5539 to reseed holes in lawn areas.

3.10 FIELD QUALITY CONTROL

A. Outdoor Lighting Work will be inspected by Owner. Contact the U-M Code Inspection Department at 734-764-2457 before pouring concrete, backfilling excavations, and energizing circuits to arrange for inspections.

3.11 COMMISSIONING

A. Perform commissioning activities per Related Sections.

DELETE THE FOLLOWING SECTION UNLESS THE PROJECT INCLUDES UNUSUAL LIGHTING UNFAMILIAR TO MAINTENANCE ELECTRICIANS.

3.12 TRAINING

A. Provide a qualified service technician from the Manufacturer's staff to provide training.

REVISE TRAINING REQUIREMENTS IN THE ARTICLE BELOW TO BE PROJECT SPECIFIC. SAMPLE TRAINING LANGUAGE IS PROVIDED, EDIT TO SUIT PRODUCT OR SYSTEM, INCLUDING DURATION. TRAINING IS NOT REQUIRED UNLESS THE PRODUCT OR SYSTEM IS COMPLEX, UNIQUE, OR NEW TO THE U-M PLANT MAINTENANCE DEPARTMENT. BECAUSE OF THE COST INVOLVED IN TRAINING DO NOT INDISCRIMINATELY SPECIFY TRAINING

B. Train Owner's maintenance personnel on equipment operation, trouble-shooting, servicing, and preventative maintenance procedures. Review the data contained in the Operating and Maintenance Manuals with Owner's personnel.

1. Provide training of 1 hour minimum.

END OF SECTION 265600

UNIVERSITY OF MICHIGAN
ARCHITECTURE, ENGINEERING AND CONSTRUCTION

ARCHITECTURE & ENGINEERING
326 East Hoover, Mail Stop B
Ann Arbor, MI 48109-1002
Phone: 734-764-3414
Fax: 734-936-3334

BuildingName
The Description of the Project
P00000000 0000

SPECIFICATION DIVISION 27

NUMBER SECTION DESCRIPTION

DIVISION 27 COMMUNICATIONS
SECTION 272000 - VOICE AND DATA COMMUNICATIONS

END OF CONTENTS TABLE

DIVISION 27 COMMUNICATIONS
SECTION 272000 - VOICE AND DATA COMMUNICATIONS

PART 1 - GENERAL

1.1 RELATED DOCUMENTS

INCLUDE PARAGRAPH 1.1.A AND B IN EVERY SPECIFICATION SECTION. EDIT RELATED SECTIONS 1.1.B TO MAKE IT PROJECT SPECIFIC.

A. Drawings and general provisions of the Contract, Standard General and Supplementary General Conditions, Division 01 Specification Sections, and other applicable Specification Sections, in particular the Related Sections listed below, apply to this Section.

IN B.2 BELOW, SELECT PROPER COMMISSIONING SPEC SECTION NUMBER APPLICABLE TO THE PROJECT.

B. Related Sections:

1. Section 017823 - Operation and Maintenance Manuals.
2. Section 019100/019110 - Commissioning.
3. Section 260513 - Medium, Low & Control Voltage Cables.
4. Section 260526 - Grounding and Bonding for Electrical.
5. Section 260533 - Electrical Materials and Methods.
6. Section 260543 - Underground Services for Electrical Systems.

1.2 SCOPE OF WORK

A. Section Includes:

1. Communications underground ducts, manholes, cable trays, conduits, floor sleeves, J-hooks, surface raceways, outlet boxes and cable pull strings as shown on the drawings.
2. Lighting, power and grounding in Building Entrance (BE) rooms and Telecommunications Rooms (TRs) as shown.

B. Work Not Included:

1. Communications backboards, equipment racks, equipment, cable ladders, cable managers, cables, terminations, jacks and outlet cover plates will be provided by others.

1.3 DEFINITIONS

A. The Building Entrance room (BE) is the main termination point for interconnecting cables external to the building with cables internal to the building. In addition, the BE may house communications equipment and electronic equipment of other systems. A BE may also serve as a combination BE and TR and serve local telecommunication work outlets.

B. Telecommunications Rooms (TRs) are distribution and termination rooms that serve the telecommunication work outlets in the immediate area. TRs may house communications equipment and electronic equipment of other systems.

1.4 QUALITY ASSURANCE

A. Manufacturers and Products: The products and manufacturers specified in this Section establish the standard of quality for the Work. Subject to compliance with all requirements, provide specified products from the manufacturers referenced in Part 2.

B. Reference Standards: Products in this section shall be built, tested, and installed in compliance with the specified quality assurance standards; latest editions, unless noted otherwise.

1. ANSI/TIA/EIA-568-C Commercial Building Standards for Telecommunications Cabling Standards.
2. ANSI/TIA/EIA-569-C Commercial Building Standards for Telecommunications Pathways and Spaces.
3. ANSI/TIA/EIA-607-B Commercial Building Grounding and Bonding Requirements for Telecommunications.

BELOW IS U-M STANDARD WARRANTY LANGUAGE. ALL WARRANTIES ARE TO START FROM THE DATE OF SUBSTANTIAL COMPLETION. DO NOT USE TERMS LIKE "UPON OWNER ACCEPTANCE" OR "18 MONTHS FROM SHIPMENT OR 1 YEAR FROM STARTUP, WHICHEVER OCCURS FIRST", ETC.

1.5 WARRANTY

A. Provide a complete warranty for parts and labor for a minimum of one year from the date of Substantial Completion.

PART 2 - PRODUCTS

A. Communications pathways, lighting, power and grounding shall be in accordance with the Related Sections.

B. Equipment rack power strips shall be 125 volt, 20 amp, 3 wire, single circuit type with 10 NEMA 5-20R single receptacle outlets on 6" centers, Wiremold #V24GB506.

PART 3 - EXECUTION

3.1 RACEWAY INSTALLATION REQUIREMENTS

VERIFY THE MINIMUM CONDUIT SIZE TO FEED OUTLET BOXES. SOME OWNERS MAY WANT A DIFFERENT MINIMUM SIZE. IF SO, CHANGE THE BELOW SIZES ACCORDINGLY, BUT THE 1-1/4" TO A SURFACE RACEWAY SHALL REMAIN UNCHANGED.

A. Minimum conduit size shall be 1" for serving one outlet box. Daisy chaining of outlet boxes is unacceptable. Instead, multiple outlets may be served from an appropriately sized junction box. The conduit feeding the junction box shall be sized as follows:

1. 1-1/4" for serving two outlet boxes.
2. 1-1/2" for serving three outlet boxes.
3. 1-1/4" for serving up to three outlets in a surface raceway.

B. Communications ducts and conduits entering the building from the outside shall transition to galvanized rigid steel conduit or intermediate metal conduit at the building wall, and shall continue as galvanized rigid steel conduit or intermediate metal conduit until entering the BE room or TR. Maximum conduit length to meet Code shall be 50'. Notify the Project Manager if this length is exceeded.

C. Riser conduits and sleeves connecting BE rooms and TRs shall be 4". Install conduits and sleeves as close as possible to the walls, at the locations shown. Stub up floor conduits and sleeves 4" AFF. Stub wall conduits and sleeves 4" into the room, and cable trays 6" into the room.

D. When conduits are needed to bypass a large interference in a cable tray run, the cross sectional area of the conduits shall equal or exceed the cross sectional area of the cable tray. These bypass conduits shall have sweeps and bends as noted below, and shall be braced well to allow pulling of communication cables.

E. Conduit bends and offsets shall be made with sweeps or manufactured elbows. Conduits shall not have more than the equivalent of 2 ninety-degree bends between pull points. Pull boxes shall not be used to make directional changes. Provide pull boxes in straight sections of conduit only.

F. Provide insulated bushings on both ends of conduits.

G. Provide double gang sheet metal outlet boxes 2-1/8" deep, and provide double gang plaster rings.

H. Bond the entire raceway system together and connect it to the ground system.

I. Provide nylon pull strings in conduits and sleeves. Label pull strings with room number and wall (N, S, E, or W) of the outlet.

3.2 BE ROOM AND TR REQUIREMENTS

A. Provide ceiling-hung lighting with a wall switch at the door.

B. Provide power to HVAC equipment.

COORDINATE WITH ITSComm AND EDIT THE CIRCUIT REQUIREMENTS ACCORDINGLY.

C. Provide dedicated 120 volt, 20 ampere circuits to duplex receptacles 48" AFF and 10' apart on the plywood backboards. Plywood backboards are by others.

D. Provide dedicated 120 volt, 30 ampere circuits to NEMA L5-30R receptacles and provide dedicated 120 volt, 20 ampere circuits to power strips on the telecom equipment racks. See Standard Detail 27200003.

E. In rooms with DAS equipment plywood backboards, provide two dedicated 120 volt, 20 ampere circuits to quad receptacles on each DAS backboard.

F. Provide one 120 volt, 20 ampere normal power circuit to a duplex receptacle on the wall near the door.

G. Coordinate all receptacle locations with ITSComm.

H. Provide a 1" wide x 12" long x 1/4" thick copper ground bus bar where shown. Connect it to the unit substation room ground bus bar and to the ground bus bars in the receptacle panels feeding the telecom room receptacles. Ground cables shall be No. 6 AWG green insulated, stranded, copper. The resistance to building ground shall be 1 ohm maximum.

3.3 COMMISSIONING

A. Perform Commissioning activities per Related Sections above.

END OF SECTION 272000

UNIVERSITY OF MICHIGAN
ARCHITECTURE, ENGINEERING AND CONSTRUCTION

ARCHITECTURE & ENGINEERING
326 East Hoover, Mail Stop B
Ann Arbor, MI 48109-1002
Phone: 734-764-3414
Fax: 734-936-3334

BuildingName
The Description of the Project
P00000000 0000

SPECIFICATION DIVISION 27

NUMBER SECTION DESCRIPTION

DIVISION 27 COMMUNICATIONS
SECTION 275313 – CLOCK SYSTEMS

END OF CONTENTS TABLE

DIVISION 27 COMMUNICATIONS
SECTION 275313 – CLOCK SYSTEMS

PART 1 - GENERAL

1.1 RELATED DOCUMENTS

INCLUDE PARAGRAPH 1.1.A AND B IN EVERY SPECIFICATION SECTION. EDIT RELATED SECTIONS 1.1.B TO MAKE IT PROJECT SPECIFIC.

A. Drawings and general provisions of the Contract, Standard General and Supplementary General Conditions, Division 1 Specification Sections, and other applicable Specification Sections including the Related Sections listed below, apply to this Section.

B. Related Sections:

IN 1 AND 2 BELOW, DELETE SUSTAINABLE DESIGN IF NOT APPLICABLE TO THE PROJECT. SELECT PROPER COMMISSIONING SPEC SECTION NUMBER APPLICABLE TO THE PROJECT.

C. Related Sections:

1. Section 018113 - Sustainable Design Requirements
2. Section 019100/019110 - Commissioning
3. Section 017823 - Operation and Maintenance Manual
4. Section 260513 - Medium, Low & Control Voltage Cables
5. Section 260526 - Grounding and Bonding for Electrical
6. Section 260533 - Electrical Materials and Methods
7. Section 260800 - Electrical Acceptance Tests

1.2 SUMMARY

A. Provide all equipment, materials, labor and services necessary to furnish, install, test and turn over to the Owner the following electrical work as required by these specifications and as shown on the drawings.

1. GPS Wireless Clocks
2. GPS Signal Transmitters

B. Participate in project coordination and scheduling activities when required by Division 01 and in project commissioning activities when required by Section 019100/01910.

1.3 SUBMITTALS

A. Product Data Sheets.

B. Installation, Operation and Maintenance Manuals.

C. Warranty Documentation.

1.4 QUALITY ASSURANCE

A. Manufacturers and Products: The products and manufacturers specified in this Section establish the standard of quality for the Work. Subject to compliance with all requirements, provide specified products from the manufacturers named in Part 2.

B. Reference Standards: Products in this section shall be built, tested, and installed in compliance with the specified quality assurance standards; latest editions, unless noted otherwise.

1. Reference Standards: UL.

1.5 DELIVERY, STORAGE, AND HANDLING

A. Deliver clocks adequately packaged to prevent damage during shipment, staging and installation.

B. Protect clocks during shipping and while onsite from the weather, moisture condensation, dirt and debris at all times. Store clocks raised up on pallets or other supports until ready for installation.

1.6 WARRANTY

A. Provide a complete warranty for parts and labor for a minimum of one year from the date of Substantial Completion.

PART 2 - PRODUCTS

2.1 MANUFACTURERS

A. Acceptable Manufacturers: Primex Wireless Inc.

2.2 CLOCKS

REVISE THE FOLLOWING PARAGRAPHS TO MAKE THEM PROJECT SPECIFIC.

VERIFY WITH ENGINEER THAT DRAWINGS DIFFERENTIATE 120 VOLT POWERED FROM BATTERY POWERED, SINGLE FACE FROM DOUBLE FACE.

A. Clocks shall be single face wall mounted or double face edge mounted, 120 volt powered or battery powered, GPS signal synchronized, wireless, analog clocks as indicated on Drawings.

B. Clocks shall be 12.5 inch nominal diameter with white face, black polycarbonate frame, polycarbonate lens, standard black numerals, and sweep second hand.

C. Clocks shall include a GPS signal receiver to synchronize wirelessly with GPS time at least every two hours, and shall include an internal oscillator to maintain time within plus or minus 0.2 seconds between synchronizations. Clocks shall maintain accurate time despite the temporary loss of GPS signal. Clocks shall automatically adjust for Daylight Savings Time.

D. Single face, 120 volt powered clocks shall surface mount to the wall over a NEMA 5-20R simplex receptacle in a single-gang, flush mounted outlet box. Clock shall mount with a clock lock hanger which requires a sequence of movements to install and remove the clock.

1. Acceptable Manufacturer: Primex Model 14306.

E. Double face, 120 volt powered clocks shall mount edgewise to the wall with a bracket that completely covers a NEMA 5-20R simplex receptacle in a single-gang, flush mounted outlet box.

1. Acceptable Manufacturer: Primex Model 14330.

F. Single face, battery powered clocks shall surface mount to the wall over a clock lock hanger which requires a sequence of movements to install and remove the clock.

1. Acceptable Manufacturer: Primex Model 14155.

2.3 GPS SIGNAL TRANSMITTERS

A. GPS wireless signal transmitters shall receive and rebroadcast GPS signals throughout the building.

B. GPS wireless signal transmitters shall be 120 volt powered, have an internal antenna, and produce a 1 watt GPS signal output compatible with the GPS clocks.

1. Acceptable Manufacturer: Primex Model 14000.

PART 3 - EXECUTION

3.1 EXAMINATION AND PREPARATION

A. Examine areas, substrates, and conditions, for compliance with requirements for installation and other conditions affecting performance of the units.

B. Proceed with installation only after unsatisfactory conditions have been corrected. Commencement of the work constitutes acceptance of the existing conditions.

3.2 INSTALLATION

A. Install clocks at the locations and heights shown on the drawings.

B. Install clocks plumb, level and tight against the wall using the clock-lock hanging method and suitable fasteners as recommended by the clock manufacturer. Initiate clock operation in accordance with manufacturer’s instructions.

C. Assemble GPS signal transmitter and install where shown on the drawings. Plug transmitter into adjacent receptacle and initiate transmitter operation in accordance with manufacturer’s instructions.

3.3 FIELD QUALITY CONTROL

A. Test units prior to putting into service to the extent required by the Manufacturer and the Commissioning Authority.

3.4 TEMPORARY SERVICE

A. Start units for temporary use only with the expressed written permission of the Project Manager and in compliance with all requirements of the Contract Documents.

B. Test units prior to putting into temporary service to the extent required by the Manufacturer and the Commissioning Authority.

C. Perform all required routine maintenance procedures during temporary service.

3.5 STARTUP

A. Conduct final inspection and testing of equipment and systems according to the manufacturer’s requirements, and verify the system meets the project design criteria.

B. Thoroughly clean units of all grease, dirt, dust, etc.

3.6 COMMISSIONING

A. Perform Commissioning activities per Related Sections above.

END OF SECTION 275313

UNIVERSITY OF MICHIGAN
ARCHITECTURE, ENGINEERING AND CONSTRUCTION

ARCHITECTURE & ENGINEERING
326 East Hoover, Mail Stop B
Ann Arbor, MI 48109-1002
Phone: 734-764-3414
Fax: 734-936-3334

BuildingName
The Description of the Project
P00000000 0000

SPECIFICATION DIVISION 28

NUMBER SECTION DESCRIPTION

DIVISION 28 ELECTRONIC SAFETY AND SECURITY
SECTION 281300 - ACCESS CONTROL & MONITORING SYSTEM

END OF CONTENTS TABLE

DIVISION 28 ELECTRONIC SAFETY AND SECURITY
SECTION 281300 - ACCESS CONTROL & MONITORING SYSTEM

USE THIS SECTION FOR ANN ARBOR CAMPUS LOCATIONS ONLY. DOES NOT APPLY TO HOUSING, NCRC OR HEALTH SYSTEM WORK. USE THIS SECTION ONLY IN CONJUNCTION WITH SECTION 281600.

PART 1 - GENERAL

1.1 RELATED DOCUMENTS

INCLUDE PARAGRAPH 1.1.A AND B IN EVERY SPECIFICATION SECTION. EDIT RELATED SECTIONS 1.1.B TO MAKE IT PROJECT SPECIFIC.

A. Drawings and general provisions of the Contract, Standard General and Supplementary General Conditions, Division 1 Specification Sections, and other applicable Specification Sections including the Related Sections listed below, apply to this Section.

IN 1 AND 2 BELOW, DELETE SUSTAINABLE DESIGN IF NOT APPLICABLE TO THE PROJECT. SELECT PROPER COMMISSIONING SPEC SECTION NUMBER APPLICABLE TO THE PROJECT.

B. Related Sections:

1. Section 018113 – Sustainable Design Requirements
2. Section 019100/019110 - Commissioning
3. Section 017823 - Operation and Maintenance Manual
4. Section 260513 - Medium, Low & Control Voltage Cables
5. Section 260526 - Grounding and Bonding for Electrical
6. Section 260533 - Electrical Materials and Methods
7. Section 260800 - Electrical Acceptance Tests
8. Section 281600 - Security Systems

1.2 SUMMARY

A. This section refers to new work and work that will be performed to modify existing systems. The Security Contractor shall provide all equipment, materials, labor, and services necessary to furnish, install, connect, activate, and test a complete Access Control and Monitoring System. All materials, equipment fabrication, installation, and tests shall conform to applicable Codes and authorities having jurisdiction. Access Control and Monitoring System shall include, but is not limited to, the following:

1. Provide a complete Access Control and Monitoring System. A complete system is defined as all conduit, raceways, junction boxes, cables, card readers, controllers, alarm contacts, and programming needed to achieve a complete and functional system connected to the existing University central system. Also included are all required power supplies, power filtering, mounts, housings, equipment stands, and interfaces to existing equipment.

2. The Access Control and Monitoring System shall be an expansion of the existing University of Michigan campus wide Software House system. Work includes adding system panels, card readers, and associated access control devices in locations identified on Drawings.
3. Provide all 120VAC power wiring and low-voltage work to the system and all necessary components.
4. Coordinate system requirements with the University of Michigan's project management team.
5. Establish system communication with the Access Control System Server and panels via the Owner's LAN/WAN network.
6. Provide system administrative support throughout the installation process to meet the specific needs of the project scope of work.
7. Furnish and any install required interface relays, materials, and cabling to the fire alarm control panel.
8. Coordinate with the Owner's Representative and the U-M key office to provide installation, testing, adjustment, and initial programming for all equipment.
9. Provide written documentation and instructions for system as installed.

1.3 RELATED SECTIONS

A. Section 281600 articles including, but not limited to:

1. References
2. Quality Assurance
3. Submittals
4. Warranty
5. Record Documents
6. Commissioning / Acceptance Testing
7. Training

1.4 QUALITY ASSURANCE

A. Pre-programming conference: Prior to programming new doors in Owner's existing access control systems, conduct conference at Project Site to be attended by Owner's Representative, security contractor, Architect, and representatives from Owner's key office.

B. Qualified Installers:

1. Siemens (Phil Bowen, 734-233-5728)
2. Cabling Concepts (Tim Grady, 248-363-4200)
3. SimplexGrinnell (John Keith, 248-427-5050)

PART 2 - PRODUCTS

2.1 ACCESS CONTROL PRODUCTS

A. System Specifications

1. Manufacturer’s catalog and system numbers of equipment listed in this specification indicate type, quality, and functions of the equipment required, and represent the minimum acceptable standards. Provide all compatible parts for the submitted system. The Access Control system work shall integrate with Owner's existing SoftwareHouse C-Cure 800 system.

2.2 ACCESS CONTROL EQUIPMENT

A. Access Control panels shall be SoftwareHouse I-Star Pro Series only. Access Control panels shall include, at a minimum, the following:

1. I/O boards, and power supplies for DC locks with battery back-up sufficient to maintain full operation of monitoring junctions for a minimum of 4 hours, plus a minimum of 25 lock activations in the event of power failure.
2. Interfacing relays between Access Controller Panel (ACP) outputs and locks being controlled.
3. Sufficient input boards to accept all monitored points on the Access Control System and sufficient output boards to accept all outputs on the Access Control System. All input and output boards shall include 20% extra points for future connections to the system.
4. Reed tamper switches.
5. Output contacts that open on AC power failure and low battery conditions from power supplies. Low battery monitoring must be unique to each power supply.

B. Card Readers

1. Provide one reader at each new card reader access control door opening noted on the Drawings:

SELECT ONE OF THE FOLLOWING. COORDINATE SELECTION WITH DESIGN MANAGER.

a. Multi-technology reader: SoftwareHouse - RM2L-4000-UM.

2. Mount readers on shallow depth double-gang electrical boxes.
3. Provide manufacturer's standard thermostatically controlled heater for exterior installations powered from power supply located at access control panel assembly.
4. Provide reed tamper switch.

C. Door Monitor Switch

1. Provide low-voltage magnetic position sensor with SPDT switch. Utilize recessed door monitors wherever possible.
   a. Recessed door monitors: ABS plastic enclosure. Provide GE/Sentrol 1078 series switch.
   b. Surface mounted door monitor: Anodized alloy housing with stainless steel armored cable. Provide GE/Sentrol 2500 series switch.
   c. Overhead door monitor: Heavy-duty anodized aluminum housing with stainless steel armored cable. Provide GE/Sentrol 2202 series switch.
   d. Connect Door Switch Monitor (DSM) to the RM/Reader input number 1.

D. Access Control Cards

1. Existing University of Michigan identification cards will be utilized. NIC.

E. Request-to-Exit (RTE) Motion Sensors

1. Request to exit motion sensors: Bosch DS-150 series or equal by Software House. Light gray or black color to match adjacent finishes.
2. Relay output will be connected to the RM/Reader input number.
3. Power for RTE from the power supply at the panel.
4. Mount device on ceiling or door frame. Exact location will depend on existing conditions and the required coverage area. Unless noted otherwise on Drawings, conceal wireways and junction box.

F. Power Supplies and accessories

1. Power supplies at panel assembly:
   a. Lock / heater power: Provide 24VDC power supplies for all electrically controlled door locks and reader heating elements. (Lock power will be wired back to the power source at the panel. Do not use the RM/Reader output relay for the electric locking device.) Power supplies shall permit simultaneous continuous-duty activation of all door locks and reader heating elements, with an additional minimum 30% capacity on each supply. Provide battery back-up sufficient for 25 activations for all DC locks. A single power supply may be used for two doors when the power supply is located near both doors.
      1) Manufacturer: Securitron BPS-24-10.
      2) At existing panel assemblies modified to connect new doors but maintain existing capacity, provide additional power supply capacity to serve new doors.
   b. Access control panel power: Provide battery backed power supply.
      1) Securitron AQM20-16C SoftwareHouse approved power supply.
   c. Reader heat: Provide low-voltage power supplies for all reader heating elements. Provide Class 2 Energy-Limiting Plug-in type transformer with internal slow-blow fuse and UL Listing.
      1) Hammond BPE2E, or approved equivalent.
2. Power Supplies at EL-type doors:
   a. Provide manufacturer's standard battery backed power supply for EL-type exit device used.
   b. Locate power supply in accessible location, concealed from view within manufacturer's recommended distance.
   c. In locations where two EL-type devices are within close proximity, provide single power supply to serve both doors.
   d. Coordinate location with requirements of Division 08 for Doors.
3. Accessories: If necessary, provide interfacing relays between Access Control Panel (ACP) and electric locks being controlled.

PART 3 - EXECUTION

3.1 SYSTEM INTERRUPTIONS

A. Coordinate with the U-M Fire Protection Shop (734-647-2046) and UMHHC Facility Command Center (734-936-4000) before performing any work affecting an existing fire alarm system. Operating, programming, modifying, or impairing an existing system without approval of the U-M Fire Protection Shop and UMHHC Facility Command Center is strictly prohibited.

B. Coordinate with the U-M Key Office (734-764-3481) before performing any work affecting existing electrically controlled doors, existing control panels, or other access control components.

C. Coordinate door hardware installation with panel work, system programming, Owner's Representative and Owner's key office such that each door is fully operational with 24 hours of hardware modifications.

3.2 PROGRAMMING

A. Special coordination is required with the U-M Key Office regarding programming requirements. Meet with Owner representatives and submit proposed labels for all input and output points for review and comment. Software labels shall be consistent between various integrated systems. Refer to 281600.

B. Program automatic door unlock, time specifications, and access levels as directed by the Owner.

3.3 INSTALLATION

A. All electrical power work, conduit work, and wire pulling shall be by licensed electricians, and all card reader installation and interconnection work shall be Tyco SoftwareHouse CCure 800 certified technicians

B. Provide all wiring in conduit in accordance with Sections 260533 and 260513, and Manufacturer’s instructions.

C. Method and routing of any exposed raceways or wiring shall be approved by the owner prior to installation.

D. Wiring shall be grouped and harnessed to facilitate access to all equipment, as well as maintenance and replacement of equipment.

E. All cable shall be labeled at origin and termination, referencing to a master legend schedule shown on submittal drawings. Labeling and any splice locations shall be noted on Record Drawings.

F. Provide 120V receptacle outlets dedicated to the reader heating elements.

3.4 WIRE AND CABLE PRODUCTS

A. Wire and Cable Specifications

1. Security Contractor shall follow the manufacturers' recommendation for cabling or the minimum requirements of the Specifications, whichever provides for the most stringent requirements.
2. Cables are to be shielded as necessary to preclude any outside noise or interference from entering the cable and degrading system performance. All cables shall be UL Listed, and appropriate for the application.
3. Coordinate with the Owner's IT department connections to offsite monitoring.
4. Cables run underground, under slab, or in slab shall be installed in conduit and rated for direct-burial application. Cables exposed to weather shall be rated for that use.
5. Mixing of low-voltage cables with telephone/data cables is not permitted.
6. All cables shall be run in unbroken lengths of 1,000 feet or less. No coaxial or power cables less than 1,000 feet shall be spliced. When cable cannot be run in unbroken lengths due to cable spool limitations, coax splices shall be made in junction boxes with crimp-type BNC connectors, power cable splices shall made using solder and tape. For coaxial cable, the center conductor tip shall be a crimp-on style; the ferrule shall be a hexagonal crimp with a minimum ferrule length of 3/8 inch. All splices and junction boxes shall be clearly marked on the "As-Built" Record Drawings.
7. The use of all screw type connectors i.e. snap caps, wire nuts, and the "twist and tape" method are prohibited.
8. All 24VAC power cabling shall be of stranded construction. Terminal strips and fork spade lugs shall be utilized for all terminations.
9. Wiring shall be grouped, bundled, harnessed, and dressed neatly to facilitate access to all equipment, as well as maintenance and replacement of equipment.
10. All cable shall be labeled at origin and termination, referencing to a master legend schedule as shown on "As-Built" Record Drawings. Labeling and any splice locations shall be noted on "As-Built" Record Drawings. All labels shall be done using machine generated cable tags in the "flagged" position. Hand written labels are not acceptable.

3.5 COMMISSIONING

A. Perform Commissioning activities per Related Sections above.

3.6 TRAINING

A. Provide a qualified service technician from the Manufacturer's staff to provide training.

REVISE TRAINING REQUIREMENTS IN THE ARTICLE BELOW TO BE PROJECT SPECIFIC. SAMPLE TRAINING LANGUAGE IS PROVIDED, EDIT TO SUIT PRODUCT OR SYSTEM, INCLUDING DURATION. TRAINING IS NOT REQUIRED UNLESS THE PRODUCT OR SYSTEM IS COMPLEX, UNIQUE, OR NEW TO THE U-M PLANT MAINTENANCE DEPARTMENT. BECAUSE OF THE COST INVOLVED IN TRAINING DO NOT INDISCRIMINATELY SPECIFY TRAINING

B. Train Owner's maintenance personnel on equipment operation, start-up and shutdown, trouble-shooting, servicing and preventative maintenance procedures. Review the data contained in the Operating and Maintenance Manuals with Owner's personnel. Training shall occur separate from startup activities.

1. Provide 2 hours of training minimum.

END OF SECTION 281300

UNIVERSITY OF MICHIGAN
ARCHITECTURE, ENGINEERING AND CONSTRUCTION

ARCHITECTURE & ENGINEERING
326 East Hoover, Mail Stop B
Ann Arbor, MI 48109-1002
Phone: 734-764-3414
Fax: 734-936-3334

BuildingName
The Description of the Project
P00000000 0000

SPECIFICATION DIVISION 28

NUMBER SECTION DESCRIPTION

DIVISION 28 ELECTRONIC SAFETY AND SECURITY
SECTION 281600 - SECURITY SYSTEMS

END OF CONTENTS TABLE

DIVISION 28 ELECTRONIC SAFETY AND SECURITY
SECTION 281600 - SECURITY SYSTEMS

PART 1 - GENERAL

1.1 RELATED DOCUMENTS

INCLUDE PARAGRAPH 1.1.A AND B IN EVERY SPECIFICATION SECTION. EDIT RELATED SECTIONS 1.1.B TO MAKE IT PROJECT SPECIFIC.

A. Drawings and general provisions of the Contract, Standard General and Supplementary General Conditions, Division 1 Specification Sections, and other applicable Specification Sections including the Related Sections listed below, apply to this Section.

IN 1 AND 2 BELOW, DELETE SUSTAINABLE DESIGN IF NOT APPLICABLE TO THE PROJECT. SELECT PROPER COMMISSIONING SPEC SECTION NUMBER APPLICABLE TO THE PROJECT.

B. Related Sections:

1. Section 018113 - Sustainable Design Requirements
2. Section 019100/019110 - Commissioning
3. Section 017823 - Operation and Maintenance Manual
4. Section 260513 - Medium, Low & Control Voltage Cables
5. Section 260526 - Grounding and Bonding for Electrical
6. Section 260533 - Electrical Materials and Methods
7. Section 260800 - Electrical Acceptance Tests

1.2 SUMMARY

A. This Specification contains a combination of prescriptive and performance requirements. The Contractor is responsible for fully implementing the functions described in the Specifications and shown on the Drawings. This will require the Contractor to perform substantial work selecting system components, integrating system functions, and integrating new components with the existing campus wide security system and with equipment provided and installed by other Sections.

B. Security Contractor shall provide all materials, equipment, fabrication, installation and tests in compliance with applicable Codes and Authorities Having Jurisdiction.

C. Provide all necessary components of an Access Control and Monitoring System (ACMS) as described in the Specifications and as indicated on the Drawings.

D. Provide a complete system which is defined as all labor and materials required to complete the Work described herein and as indicated on the Drawings. Security Contractor shall provide all hardware, and programming for installation, connection and operation of the new equipment required to provide a fully functional system that integrates with the existing Campus Wide Security System.

E. Products, equipment, materials, systems, assemblies, and accessories as specified herein define the minimum standards. Documents do not undertake to show or list every item to be provided. Items not shown or listed but are clearly necessary for proper installation, operation and functioning of the equipment and systems shall be provided, installed, tested and certified at no additional cost to the owner.

F. Provide installation, testing, adjustment, configuration and initial programming for all equipment and systems.

G. Provide training to the Owner's Representatives in the overall system layout, operation, and programming. Training will consist of review of on-site review of O&M manuals and record drawings.

H. Provide any interface relays, materials, enclosures, cabling, programming and testing required to interface Access Control

I. Provide any interface relays, materials, enclosures, cabling, programming and testing that may be required to interface with the Fire Alarm Control Panel (FACP).

1.3 RELATED SECTIONS

A. The drawings and the general provisions of the contract, including the current edition of the University of Michigan Standard General Conditions, apply to this section.

B. The applicable requirements of the Division 01

C. Applicable Division 28 specification sections as follows:

1. Section 260500: "Basic Electrical Requirements"
2. Section 260533: "Basic Electrical Materials and Methods"
3. Section 260513: "Cables and Wiring"
4. Section 262726: "Wiring Devices"
5. Section 262000: "Service and Secondary Distribution"
6. Section 260526: "Grounding"
7. Section 281300: "Access Control and Monitoring Systems"
8. Section 260800: "Electrical Acceptance Tests"

1.4 SECURITY CONTRACTOR REQUIREMENTS

A. The Security Contractor shall be responsible for coordinating the installation of all building electronic security devices specified in referenced Sections. Security Contractor shall meet the following minimum qualifications:

1. Possess all applicable Contractors' licenses.
2. Provide supervision by a person who has successfully installed similar systems by the same equipment manufacturers at three locations.

B. Perform all work in accordance with acknowledged industry and professional standards and practices, existing building conditions, and as specified herein.

C. Maintain a competent supervisor and supporting technical personnel, acceptable to the Owner, during the entire installation. A personnel change of the supervisor during the Project shall not be acceptable without prior written approval from the Owner's Representative.

D. Provide all required cables, cable support materials, conduit, backboxes, connectors, mounting hardware and trim materials for a completely functional/operational system.

E. Provide 120VAC power, conduit, and wiring per Division 26 requirements from existing power panels as directed by Owner.

F. Coordinate with the Owner's Representatives regarding connection of the new system components to the Owner's Campus Security System via the Owner's LAN and WAN networks. IP addresses and or DHCP naming conventions will be provided by Owner.

1.5 REFERENCES

A. Published specifications, standards, tests, codes, or recommended standards of trade, industry, or governmental organizations apply to work in these Sections, including:

1. ADA - Americans with Disabilities Act
2. ASCII - American Standard Code for Information Interchange
3. ASTM - American Society for Testing and Materials
4. EIA - Electronic Industry Association
5. IBC – International Building Code
6. NEMA - National Electrical Manufacturers' Association
7. NFPA - National Fire Protection Association with University of Michigan amendments
8. NEC - National Electrical Code
9. UL - Underwriters Laboratories, Inc.
10. UL 294 - Access Control Systems,
11. UL 1076 - Proprietary Burglar Alarm Systems,
12. UL 1037 - Anti Theft Alarms and Devices

B. Electronic devices radiating "RF" energy shall comply with Federal Communication Commission regulations, particularly Part 15, and shall meet minimum Class "B". Provide FCC certificate numbers indicating that products have been approved by the FCC.

1.6 QUALITY ASSURANCE

A. Where applicable, all equipment supplied by the Contractor shall be UL listed or listed by some other nationally recognized testing laboratory approved by the Owner.

B. All equipment and accessories to be the product of a manufacturer regularly engaged in its manufacture.

C. All items of a given type shall be the products of the same manufacturer.

D. All items shall be of the latest technology; no discontinued models or products are acceptable.

E. No 'beta' products will be accepted.

F. Security Contractor shall be capable of performing service or maintenance work on the specified systems. Security Contractor's lead technician shall be factory-certified by the security system(s) manufacturer(s).

G. Security Contractor must be a SoftwareHouse authorized reseller. Security Contractor shall have installed the system bid for this project in at least two projects of similar size and scope.

H. The Security Contractor shall maintain a local office staffed with factory trained technicians and adequately equipped to provide preventative and emergency service.

I. Security Contractor shall possess all required licenses and permits.

J. The Manufacturer, or their Authorized Representative, shall confirm that within 100 miles of the Project site there is an established agency which: Stocks a full complement of parts. Offers service during normal working hours as well as (24 hour/7 days a week) emergency service on all equipment to be furnished. Will supply parts and service without delay and at reasonable cost.

K. In the event of a discrepancy between the Specifications and the Drawings, whichever is more stringent or calls for the highest quantity or quality of materials has precedence. Specifications and Drawings are complementary and what is required by one is as binding as if required by all.

1.7 SUBMITTALS

A. Submittals shall be provided for review and acceptance by the Owner's Representative prior to commencement of the work.

B. All security system submittals shall be complete and in a similar format for ease of review. The Owner reserves the right to reject any submittals determined to be incomplete.

C. The Security Contractor should not consider the Owner's review of submittals to be exhaustive or complete in every detail. Approval of submittals, including substitutions, indicates only the acceptance of intent to comply with the general design or method of construction and quality as specified. The functional requirements, operations, arrangements, and quantities must comply with the Contract Documents unless changes are specifically approved in writing. Submittal approval does not relieve the Security Contractor of responsibility for errors or omissions in dimensions, details, and sizes or for coordinating items with actual building conditions.

D. Work provided without approved submittals is done at the Security Contractor's risk and may be changed at no cost to the Owner.

E. Equipment Submittals shall include:

1. Bill of Material for all new equipment.
2. Manufacturer's name, brand name, and catalog number with UL listing identified.

3. Written approval from each manufacturer affirming that Security Contractor is certified and approved for systems installation and service for all systems in this Section.
4. Service information, including address of nearest representative
5. Note: When a cut sheet is supplied that shows multiple items, clearly identify the specified parts being used including any optional items.

F. Installation Submittals shall include:

1. To scale drawings in AutoCAD DWG format.
2. Elevation and mounting details showing all modules and components.
3. Point-to-point, and termination drawings for all work showing all devices and each conductor identified. "Typical" drawings will not be accepted.
4. Battery calculations for all batteries.
5. Voltage-drop calculations are required for all lock circuits.

G. Programming Submittals shall include

1. Device names and descriptions,
2. Complete written sequence of operations for all functions of the system.

1.8 PRODUCT DELIVERY, STORAGE AND HANDLING

A. Replace, at no expense to Owner, equipment and material damaged during storage and installation as directed by the Owner's representative.

B. Products delivered to the job site shall be protected from water, dust, dirt, and foreign matter. All equipment shall be protected from water, dents, bumps, and scratching.

1.9 WARRANTY

A. Security Contractor and manufacturer guarantee installation, equipment, and all parts and labor for one year from written notification of acceptance. Security Contactor is required to submit a Service Level Agreement for the performance of warranty work, including response time, exceptions to warranty coverage, and the process to initiate warranty service call(s).

B. All warranty and service work shall be performed by personnel who have been trained and certified by equipment manufacturers and are experienced in the operation and maintenance of the installed systems.

C. The following Service Level Agreement identifies the expectations to be included in project.

1. Service Hours: Normal hours for service are Monday through Friday, 8:00 a.m. to 5:00 p.m., excluding recognized national holidays. Service calls commencing within these time frames, through to completion of the service call, will not be considered after-hours calls and will not be subject to premium rates.

2. Response Time – Normal Service: Service requests will be transmitted to the Security Contractor both by phone and e-mail. Service requests will be tagged as either Normal or Emergency. Normal requests for service transmitted to the Security Contractor prior to 10:00 a.m. Monday through Friday will be responded to by an on-site technician the same business day. Normal requests transmitted to the vendor after 10:00 a.m. will be responded to by an on-site technician by 12:00 p.m. the following business day.
3. Response Time – Emergency Service: Emergency service requests will be responded to by an on-site technician within 4 hours, regardless of the time of day transmitted or the day of week. Emergency service calls will be reimbursed to the Security Contractor at an additional fifty percent (50%) of his standard service rate.
4. Service Expectation: The Owner expects the Security Contractor to respond with a technician suitably trained and equipped to return the system to complete operation during the duration of the service call. Dispatching additional personnel, delivery of additional parts or return calls to correct the originally identified problem will not expose the Owner to additional charges. The service team will not leave the Owner's site without either returning the system to full operation or providing a documented acceptable explanation as to why the call cannot be completed. Technicians remaining on-site to complete calls after 5:00 p.m. will not expose the Owner to premium time charges.
5. Warranty service shall include the replacement of all parts and or components as required to restore normal system operation. In the event that system parts or components must be removed for repair the Security Contractor shall furnish and install temporary parts and or components as required to keep the system fully operational.

D. Owner's Responsibilities: Owner will allow unhindered access for the service technicians to areas where they will perform their work, and will promptly provide escorts if technicians need to work in areas where an Owner escort is required. Owner will provide power and telephone access for the technician to operate test equipment and power tools, and to allow the technician to communicate with their office or equipment manufacturers.

E. The Owner reserves the right to expand or add to the system during the warranty period using firm(s) other than the Security Contractor for such expansion without affecting the Security Contractor's responsibilities, provided that the expansion is done by a firm which is an authorized dealer or agent for the equipment or system being expanded.

F. Provide written notice to the Owner documenting any work performed during the warranty period.

PART 2 - PRODUCTS

2.1 SECURITY SYSTEMS PRODUCTS

A. Refer to individual security system Sections for product details.

PART 3 - EXECUTION

3.1 REQUIREMENTS

A. Coordinate all work including schedule and integration of work with other trades.

B. Coordinate work with Owner's Representatives for all network connections.

C. All systems shall be complete and operational in all respects.

D. Provide installation of all wiring, raceway, conduit, and approved wireways for Division 28 work. Provide connection of power to security systems as required.

E. Wiring in wet or damp locations, including all underground conduits, shall be rated for wet applications.

F. Security Contractor shall consult manufacturer's recommendations for cabling and conduit and use whichever is greater in size, quality, quantity, gauge, shielding and number of conductors at no additional cost to the Owner. All cables will be provided by the Security Contractor.

G. All security equipment in public areas shall be installed utilizing tamper proof mounting hardware. Provide a minimum of 2 driver bits or hand tools for each type of security fastener to the Owner. The standard type of security screw shall be a star configuration with a security center piece.

H. Cables are to be protected from excessive tension, abrasion, or damaging bends or kinks during installation. Care shall be taken not to bend, crush or kink cables.

I. Cables shall be combed straight and formed in a neat and orderly manner. Tie wraps are to be used for cable management, not support. Use tie wraps of the appropriate size and type. Do not over-tighten tie wraps.

J. Provide service loops at each termination point so devices can be dismounted for service and inspection.

K. Provide bracing for all equipment, including equipment racks and consoles.

L. Refer to individual security system Sections for additional installation requirements.

3.2 RECORD DOCUMENTS

A. As Built Drawings

1. Maintain a complete set of prints of Contract Drawings of the work forming a part of the security systems. As work is installed, carefully draw on prints, in colored pencil, actual location of work including depth of underground runs, if any, with dimensions from permanent structures. Wiring diagrams and details shall be included.

2. Upon completion of the Project, transfer this information to reproducible Drawings and updated CAD (AutoCAD DWG files) disks, and submit to the Owner, along with hand marked field record set.
3. The Security Contractor shall provide three bound sets of drawings and two CDROMs with all AutoCAD drawing files and corresponding PDF files.
4. Record Drawings shall include:
    a. Complete wiring diagrams for all components, including cable types and quantities, routings, floor plans indicating device locations, room numbers, conduit sizes.
    b. Complete elevation, mounting, and point-to-point and termination drawings for all devices. "Typical" drawings will not be accepted.
    c. A Master Legend/Spreadsheet on the drawings that identifies all devices, device location on the drawings, wire label verbiage, panel termination points and detail numbers. Each spreadsheet will be specific to the control panel. The legend/spreadsheet will also be place in each control panel for service support and termination assistance. For work in existing panels, provide information noted above for all additions and modifications.
    d. A complete written sequence of operations for all functions as installed and programmed for each system.
    e. A complete list of all equipment installed organized by building.

B. Operations and Maintenance Manuals

1. Provide operations and maintenance manuals Division 01 requirements and as follows
2. Operations:
    a. The operations section shall contain complete guidance and procedures for operation of the system and each subsystem including all required actions at each operator position, step by step instructions for system start-up and execution of all system functions and commands.
    b. Operation section shall include the following information:
        1) Detailed descriptions including step by step procedures for initialization, recovery and re start for each system.
        2) Complete operational descriptions for each system including all functions and features.
        3) Detailed descriptions for all programming and data base entry functions including step by step procedures, screen illustrations and flow charts.
        4) Copies of manufacturer operation manuals and instructions.
3. Maintenance
    a. The maintenance section shall contain complete guidance and procedures for routine maintenance of the system and each subsystem including manufacturer recommendations for preventative maintenance.

b. Maintenance section shall include the following information:
   1) The names, addresses and contact information for each manufacturer, local manufacturer representative and all subcontractors that performed work or furnished material for the project.
   2) Detailed descriptions of all user performed maintenance on all system components including inspection, periodic preventative maintenance, fault diagnosis and replacement of all modules.
   3) A summary of all TCP/IP addresses used and which system component they are associated with.
   4) Manufacturer data specification sheets for each piece of equipment, device and system.
   5) Manufacturer service and installation manuals for each piece of equipment, device and system.
   6) Manufacturer warranty certificates.
   7) Reduced copy of as built drawings.

3.3 COMMISSIONING/ACCEPTANCE TESTING

A. Perform Commissioning activities per Related Sections above.

B. There are two distinct types of tests for which the Security Contractor is responsible:

1. The first type is the Pre-Functional Performance Test. These tests ensure that all equipment, wiring, and systems are installed in accordance with the Specifications, Drawings, and manufacturers' requirements.
2. The second type of test is the Substantial Completion Test. These tests ensure that all equipment and systems operate in accordance with design intent. These are dynamic tests, and test the systems through all possible modes of operation.

C. Perform systems tests using personnel who have attended a manufacturer's training school for installation and testing of the systems as described above. Perform testing with the test instruments as required by the manufacturer; testing by means other than the manufacturer's procedures will not be acceptable unless agreed to by the Owner's Representative.

D. Upon completion of the installation of the security systems, the Contractor shall submit to the Owner Pre-Functional Performance Test reports including, but not limited to, the following information:

1. A complete list of all equipment installed, including serial numbers of major components.
2. Certification that all equipment is properly installed and functional, and it conforms with Contract Specifications and Drawings.
3. Test reports of all new and existing inputs and outputs, devices, and equipment.
4. Test technician's name, company, and dates of test.

E. Following review of the Pre-Functional Performance Test report by the University of Michigan project team, the Contractor shall schedule a substantial completion test with the University of Michigan projects team. A Substantial Completion Test shall include performance tests of each device, switch, control unit, power supply, battery standby unit, monitor panel, controller, and all other equipment and material required by the Contract. Tests will only be conducted at completed buildings, partial testing of buildings will not be performed by the University of Michigan project team. Owner will provide testing document.

F. At a minimum, perform tests to demonstrate that:

1. All systems are free from grounding and open circuits.
2. Each alarm-initiating device consistently functions as specified and produces the specified alarm actions.
3. An abnormal condition of any circuit or device required to be electrically supervised will result in activating the specified trouble or tamper alarm signal.
4. Doors lock and unlock at programmed times and allow access upon activation from a valid card.
5. The system is operable under specified trouble conditions.
6. All software functions properly as specified, and all equipment is fully programmed. The Security Contractor shall be responsible for programming system English-language descriptors as specified by the Owner’s representative.
7. System Record Drawings correspond with actual installation.

G. Final commissioning by Owner is required for final acceptance. Final commissioning is be scheduled simultaneous with punch list.

H. If retesting is required due to Security Contractor equipment failure, incorrect programming, omission, or error, the Security Contractor shall correct the problem, retest, and state in writing the system is ready for the Owner to witness a demonstration.

3.4 TRAINING

A. Provide a qualified service technician from the Manufacturer's staff to provide training.

REVISE TRAINING REQUIREMENTS IN THE ARTICLE BELOW TO BE PROJECT SPECIFIC. SAMPLE TRAINING LANGUAGE IS PROVIDED, EDIT TO SUIT PRODUCT OR SYSTEM, INCLUDING DURATION. TRAINING IS NOT REQUIRED UNLESS THE PRODUCT OR SYSTEM IS COMPLEX, UNIQUE, OR NEW TO THE U-M PLANT MAINTENANCE DEPARTMENT. BECAUSE OF THE COST INVOLVED IN TRAINING DO NOT INDISCRIMINATELY SPECIFY TRAINING

B. Train Owner's maintenance personnel on equipment operation, start-up and shutdown, trouble-shooting, servicing and preventative maintenance procedures. Review the data contained in the Operating and Maintenance Manuals with Owner's personnel. Training shall occur separate from startup activities.

1. Provide 2 hours of training minimum.

END OF SECTION 281600

UNIVERSITY OF MICHIGAN
ARCHITECTURE, ENGINEERING AND CONSTRUCTION

ARCHITECTURE & ENGINEERING
326 East Hoover, Mail Stop B
Ann Arbor, MI 48109-1002
Phone: 734-764-3414
Fax: 734-936-3334

BuildingName
The Description of the Project
P00000000 0000

SPECIFICATION DIVISION 28

NUMBER SECTION DESCRIPTION

DIVISION 28 ELECTRONIC SAFETY AND SECURITY
SECTION 283100 - FIRE DETECTION AND ALARM SYSTEM

END OF CONTENTS TABLE

DIVISION 28 ELECTRONIC SAFETY AND SECURITY
SECTION 283100 - FIRE DETECTION AND ALARM SYSTEM

PART 1 - GENERAL

1.1 RELATED DOCUMENTS

A. Drawings and general provisions of the Contract, Standard General and Supplementary General Conditions, Division 01 Specification Sections, and other applicable Specification Sections, in particular the Related Sections listed below, apply to this Section.

B. Related Sections:

1. Section 017823 - Operation and Maintenance Manual
2. Section 019100/019110 - Commissioning
3. Section 260513 - Medium, Low & Control Voltage Cables
4. Section 260526 - Grounding and Bonding for Electrical
5. Section 260533 - Electrical Materials and Methods
6. Section 260800 - Electrical Acceptance Tests

1.2 SUMMARY

A. Provide all equipment, devices, appliances, wiring, and materials necessary for a complete and expandable fire detection and alarm system which adheres to applicable codes, standards, and University of Michigan requirements.

B. Coordinate with and provide submittals to the Michigan Bureau of Fire Services, Ann Arbor Fire Department, U-M Fire Marshal, and FM Global as required.

C. Maintain the existing fire alarm system in service while the new work is installed, tested and made operational.

D. Provide a new fire alarm system with the following features:

1. A main fire alarm control panel (FACP).
2. Node and notification appliance circuit (NAC) panels.
3. Automatic and manual initiating devices.
4. Audible and visual notification appliances.
5. Control inputs and outputs to ventilation systems.
6. Control outputs to each elevator controller to initiate elevator recall.
7. Status monitoring of fire pump controllers, sprinkler flow switches, and sprinkler valve tamper switches.
8. Alarm, supervisory, trouble, fire pump running and maintenance alert outputs to the MOSCAD alarm transmitter.
9. Raceways, junction boxes, wiring and accessories as shown on the drawings and as required for a complete and operable system.
10. System programming in accordance with the system's sequence of operation.

E. Renovate the existing fire alarm system by providing the following as appropriate for the project's scope:

1. A pre-renovation test of the existing system to document the condition of the system before it is changed.
2. A main fire alarm control panel (FACP).

3. Node and notification appliance circuit (NAC) panels.
4. Automatic and manual initiating devices.
5. Audible and visual notification appliances.
6. Control inputs and outputs to ventilation systems.
7. Control outputs to each elevator controller to initiate elevator recall.
8. Status monitoring of fire pump controllers, sprinkler flow switches, and sprinkler valve tamper switches.
9. Alarm, supervisory, trouble, fire pump running and maintenance alert outputs to the MOSCAD alarm transmitter.
10. Raceways, junction boxes, wiring and accessories as shown on the drawings and as required for a complete and operable system.
11. System programming as required to incorporate changes to the system's sequence of operation.

F. Provide the following additional work where shown on the drawings:

1. Remote annunciators.
2. A smoke control system control panel.
3. Status monitoring of other building life safety systems.
4. Control outputs to automatically control smoke control system equipment.
5. Status lights indicating the current status of smoke control system equipment.
6. Control switches to manually override the automatic control outputs to smoke control system equipment.
7. Control outputs to interrupt power to electrically operated access control door hardware devices.
8. Non-battery backed power to door hold-open devices.
9. Emergency voice/alarm communications.
10. Building-wide mass notification system.
11. Remote microphone cabinets.
12. Fire Department telephone communications.

G. The following work is not included unless shown otherwise:

1. Smoke and heat detectors that actuate a fire suppression system.
2. Electrically operated door hardware devices.
3. Power to electrically operated door hardware devices.
4. Door hold-open devices.

1.3 RELATED SECTIONS

A. The drawings and the general provisions of the contract, including the current edition of the University of Michigan Standard General Conditions, apply to this section.

B. The applicable requirements of the other Division 28 specification sections, including the following, apply to this section.

1. Section 260533, "Basic Electrical Materials and Methods".
2. Section 260513, "Cables and Wires".
3. Section 262000, "Service and Secondary Distribution".
4. Section 260526, "Grounding".
5. Section 260800, "Electrical Acceptance Tests".

1.4 REFERENCES

A. Comply with the current versions of the following codes and standards as applicable:

1. ANSI/IEEE C2, "National Electrical Safety Code".
2. MBC, "Michigan Building Code".
3. MEC, "Michigan Electrical Code".
4. "Michigan Elevator Code"
5. MMC, "Michigan Mechanical Code".
6. "Michigan Rehabilitation Code".
7. "Michigan Residential Code".
8. NFPA 13, "Standard for the Installation of Sprinkler Systems".
9. NFPA 20, "Standard for the Installation of Centrifugal Fire Pumps".
10. NFPA 72, "National Fire Alarm Code", clarified as follows:
    a. Smoke and heat detectors shall not be required above suspended ceilings.
    b. Horns or speakers shall not be installed in elevator machine rooms. Horns, speakers, or strobes shall not be installed in elevator cars.
    c. Fire alarm system shall not shut down power to the elevators upon sprinkler water flow.
    d. Optional smoke detectors in rooms with beam pockets shall be spaced as shown on the plan drawings.
11. NFPA 90A, "Standard for the Installation of Air Conditioning and Ventilating Systems".
12. UL 217, "Single and Multiple Station Smoke Detectors".
13. UL 268, "Smoke Detectors for Fire Protective Signaling Systems".
14. UL 268A, "Smoke Detectors for Duct Applications".
15. UL 464, "Audible Signal Appliances".
16. UL 521, "Heat Detectors for Fire Protective Signaling Systems".
17. UL 864, "Control Units for Fire Protective Signaling Systems"
18. UL 1480, "Speakers for Fire Protective Signaling Systems".
19. UL 1971, "Signaling Devices for the Hearing Impaired".

B. For classroom, in-patient medical, and Housing projects, comply with the applicable sections of NFPA 101, "Life Safety Code" as adopted and amended by the Michigan Bureau of Fire Services.

C. For systems that provide partial evacuation or relocation of occupants rather than full evacuation, comply with the NFPA 72 requirements related to survivability from attack by fire.

1. Designate each notification appliance circuit to serve no more than one notification zone.
2. Protect power supply and notification appliance circuits from fire until they enter the notification zone they serve.
3. Monitor the integrity of audible and visual notification appliance power supplies, audio generators, amplifiers and circuits.
4. Monitor the integrity of Fire Department telephone communications circuits.

1.5 SYSTEM DESIGN REQUIREMENTS

A. The system shall be device addressable and power limited.

B. Provide a fire alarm control panel with the following:

1. Digital display.
2. Multiple pushbutton keypad.
3. LED status indicating lights.
4. Audible status signals.
5. Output relays.
6. Battery charger and batteries.
7. RS-232 communications card.

C. Evaluate and document the appropriate signaling line circuit class designation.

1. In general, provide Class B signaling line circuits except where an applicable code requires a different circuit class.
2. Provide sufficient spare capacity on each signaling line circuit for an additional 25 percent of initiating and control devices.

D. Evaluate and document the appropriate notification appliance circuit class designation.

1. In general, provide Class B notification appliance circuits except where an applicable code requires a different circuit class.
2. Size the control panel power supplies, amplifiers, and batteries for 25 percent spare capacity calculated with 40 ma horn loads, 1 watt speaker loads, and 150 ma strobe light loads.
3. Provide sufficient spare capacity on each notification appliance circuit for an additional 25 percent of notification appliances.

E. The system shall supervise the following circuits and components:

1. Initiating device circuits.
2. Signaling line circuits.
3. Notification appliance circuits.
4. Addressable initiating and control devices.
5. Control output wiring.
6. Auxiliary control switches.
7. System node panels, NAC panels, remote annunciators, and remote microphone panels.
8. Primary power supply.
9. Secondary power supply.

F. The system shall be capable of being programmed by the Owner on site to accommodate expansion or sequence of operation changes.

G. Provide 120 volts AC primary power to the system from a dedicated emergency power branch circuit.

H. Provide a control panel battery charger capable of fully charging a 200 amp-hour battery within 24 hours.

I. Provide sufficient secondary power battery capacity to operate the entire system (except the door hold-open devices) upon the loss of primary power for a period of 24 hours in a normal supervisory mode followed by 5 minutes of evacuation alarm operation.

1. When emergency voice/alarm communications is provided, provide sufficient battery capacity for 24 hours of operation in a normal supervisory mode followed by 15 minutes of voice/alarm operation.
2. The system shall automatically transfer to and from the secondary power batteries upon an interruption of primary power without initiating a nuisance alarm.
3. The system shall delay initiating a trouble condition for two seconds upon a transfer to or from primary power to avoid nuisance trouble conditions during emergency generator testing.

J. Provide smoke and heat detectors as required by code and as shown, including the following.

1. Provide smoke detectors in each elevator lobby, in each elevator machine/control room, and at the top of each elevator shaft to initiate elevator recall.
2. Provide two heat detectors, one in front and one behind, each unit substation transformer.
3. Provide a smoke detector in each mechanical, electrical, telecommunications, trash collection, and recycling room.
4. Provide smoke detectors in residence hall corridors, each sleeping room, and immediately outside each sleeping room that is located within a suite or apartment.
5. Provide duct smoke detectors where required by code. When not in plain view or when more than 10 feet above the floor, provide duct detector remote alarm indicators and test switches mounted in plain view at 48 inches above the floor.

K. Provide sufficient audible notification appliances to achieve a sound level of 15 dBA above ambient sound level, but not less than 60 dBA nor more than 110 dBA in all occupiable spaces. The sound level in mechanical rooms shall be not less than 90 dBA, and in sleeping rooms shall be not less than 75 dBA measured at pillow level. The sound shall be a three-pulse temporal pattern evacuation tone.

1. In rodent rooms, the sound shall be a slow whoop or warble with a peak frequency below 500 Hz.
2. Do not provide horns or speakers in exit stair enclosures.
3. Do not provide horns or speakers in elevator machine rooms or in elevator cars.
4. Provide a speaker in each sleeping room and a sounder base in each sleeping room smoke detector. The speaker shall provide the general alarm and the sounder base shall alarm upon smoke within the room.

L. Provide visual notification appliances in accordance with the intensity and spacing requirements of NFPA 72.

1. Provide strobes in all public areas including multi-person offices.
2. Do not provide strobes in exit stair enclosures or in animal rooms.
3. Combine horns or speakers with strobes when both are required at the same location.
4. Synchronize strobes when more than two appliances are in any point of view and are less than 55 feet apart.

5. Provide strobes in elevator machine rooms. Do not provide strobes in elevator cars.
6. Provide strobes in accessible sleeping rooms and in living spaces of accessible suites or apartments.
7. Provide strobes in mechanical rooms and other areas that have an average ambient noise level exceeding 95 dBA.

M. Provide a waterproof horn/strobe or speaker/strobe with waterproof back box on the exterior of the building between 8 and 12 feet above each fire department connection. Audible sound shall be 90 dBA minimum at 10' and visual intensity shall be 110 candelas. Program this device to alarm upon sprinkler system water flow only, and to cease operation upon termination of water flow.

N. Provide individually addressable monitor modules to monitor non-addressable initiating devices and status contacts of other systems.

1. Monitor modules shall use Class B initiating device circuits to monitor the initiating devices and status contacts.
2. When interconnecting with an existing fire alarm system control panel, provide monitor modules as required.
   a. New and existing control panels shall function as a single system.
   b. All control panels shall be capable of being reset simultaneously from a single location.

O. Provide panel auxiliary relay contacts and individually addressable control module contacts, including the required panel control logic programming, to interface with control circuits of other systems and equipment.

1. Provide normally closed duct smoke detector contacts to shut down ventilation systems.
2. Provide three control module output contacts for each elevator to control elevator recall.
3. Provide normally closed auxiliary relay or control module contacts to release electrically held door locks and door hold-opens, and to disable electrically operated door proximity sensors.
4. When interconnecting with an existing fire alarm system control panel, provide control modules as required.
   a. New and existing control panels shall function as a single system.
   b. All control panels shall be capable of being reset simultaneously from a single location.

P. Provide a smoke control system panel.

1. Provide normally open auxiliary relay or control module contacts to automatically control smoke control system equipment.
2. Provide smoke control panel On/Off/Auto switches with "On" and "Off" or "Open" and "Closed" LED indicators for overriding the normally open contacts that control smoke control system equipment.
   a. In the Auto position, the contacts shall operate in accordance with the fire alarm system program. In the Off position, the contacts shall remain open. In the On position, the contacts shall close to test the controlled equipment.

b. The LED indicators shall indicate the status of the controlled equipment in accordance with the MMC.
c. Turning any switch out of the Auto position shall initiate a system trouble condition.

Q. Assign each initiating device and control module a unique device address. Label each device with its unique address using a clear adhesive backed nylon or Mylar tape with black text. Install the label on the base of any device with a removable or replaceable head.

R. Develop a custom location label for each initiating device and control module that describes the type, floor, room number and exact location of the device.

1. If the device is in a corridor or similar large space, state device is by Room XXX.
2. If room numbers are not available, provide compass directions and references to unique building features.

S. Provide transient voltage surge suppression for the system.

1.6 SYSTEM PERFORMANCE REQUIREMENTS

A. Under normal conditions, the control panel digital display shall display a "SYSTEM NORMAL" message and the current time and date.

B. Should an abnormal condition be detected, the appropriate alarm, supervisory, or trouble panel LED shall flash and the appropriate panel audible signal shall sound.

C. The appropriate panel alarm, supervisory, trouble, or supervisory maintenance alert output relay contact shall close and send a signal through the MOSCAD alarm transmitter to the Division of Public Safety and Security (DPSS).

D. The fire alarm control panel shall manage all input and output signals through software programming and hardware configuration. In addition to managing and supervising the fire alarm devices, the control panel shall be configured to trigger a supervisory condition when the fire pump runs.

E. The panel shall display the following information relative to the abnormal condition:

1. Custom location label (40 characters minimum).
2. Type of initiating device.
3. Type of abnormal condition (alarm, supervisory or trouble).

F. If the abnormal condition is an alarm, the following actions shall occur:

1. Audible notification appliances shall sound throughout the building.
2. Visible notification appliances shall flash throughout the building.
3. Control outputs to mechanical systems and elevator controllers shall perform their programmed functions.
4. Control outputs shall interrupt power to electrically operated door hardware devices.
5. Power to door hold-open devices shall de-energize.

G. Pressing the appropriate Acknowledge pushbutton shall acknowledge the alarm, supervisory or trouble condition unless the system is in the silence inhibit mode. Once acknowledged, the appropriate LED shall latch on and the panel audible signal shall be silenced.

H. If the abnormal condition is an alarm, pressing the Silence pushbutton shall silence the audible notification appliances and stop the visual notification appliances from flashing.

I. Upon a subsequent abnormal condition from another device, the appropriate panel LED shall flash, the panel audible signal shall again pulse and the panel display shall show the new abnormal condition.

J. After all of the points have been acknowledged and silenced, the LED's shall glow steady and the panel audible signals shall be silenced. The total number of alarms, supervisory, and trouble conditions shall be displayed along with a prompt to review each list chronologically. The end of the list shall be indicated.

K. Pressing the System Reset pushbutton shall return the system to its normal state if the abnormal conditions have been remedied.

1. The display shall step the user through the reset process with simple English language messages. Messages including "IN PROCESS", "RESET COMPLETED", and "SYSTEM NORMAL" shall provide operator assurance of the sequential steps as they occur.
2. The ventilation system motors shall restart sequentially.
3. The outputs to control circuits of other systems and equipment shall return to normal.
4. When interconnecting with an existing fire alarm system control panel, resetting shall not require the simultaneous operation of reset pushbuttons or switches on multiple control panels, or the disconnection of wiring.

L. Should an abnormal condition continue to exist, the system shall remain in an abnormal state. The system control relays shall not reset. The panel LED’s shall remain on. The display shall indicate the total number of alarm, supervisory and trouble conditions present in the system along with a prompting to review the points. These points shall not require acknowledgment if they were previously acknowledged.

M. Should a trouble condition continue to exist, the trouble audible signal shall resound at preprogrammed time intervals to act as a reminder that the fire alarm system is not 100 percent operational. Both the time interval and the trouble audible signal shall be programmable to suit the Owner's application.

N. Should the Alarm Silence Inhibit function be active, the System Reset pushbutton shall be ignored and a "RESET INHIBITED" message shall be displayed for a short time to indicate that action was not taken. For operator assurance, a "RESET NO LONGER INHIBITED" message shall be displayed when the inhibit function times out.

1.7 ITEMIZED QUOTATION

A. Submit with your bid an itemized cost breakdown listing all major component costs, labor costs (including subcontractor labor and material costs), and engineering costs, for base bid and for each alternate, for the entire fire alarm system scope of work. When requested, provide an itemized breakdown to the Owner post-bid for review and approval.

1.8 SUBMITTALS

A. Submit for approval copies of the following shop drawings and product literature. Shop drawings shall contain title blocks identifying the project name and number. Submittals shall be marked to indicate the specific models, sizes, types, and options being provided. Submittals not so marked and incomplete submittals will be rejected.

1. Plan drawings showing the locations (with room names and numbers) of the system components, including any adjustments in the quantities and locations of initiating devices and notification appliances to meet code requirements.
2. Riser diagram showing system components, interconnecting wiring and connections to other building systems and equipment.
3. Wiring diagrams showing manufacturer and field connections at component terminals, complete with conductor color codes and wire numbers.
4. System configuration list showing inputs, outputs, device addresses and custom location labels, device configurations and program logic.
5. Bill of materials.
6. Catalog pages showing system components.
7. System battery sizing calculations.
8. Power supply, amplifier and circuit sizing calculations.
9. Door hold-open power supply sizing calculations.

1.9 EXTRA MATERIALS

A. Provide to the Owner the following extra materials matching the products installed, packaged in protective coverings for storage, and identified with labels clearly describing the contents. Provide 1 percent of the installed amount of each with a minimum of one of each.

1. Fuses: Each size and type used in the system.
2. Manual Pull Stations.
3. Detector Bases.
4. Detector Heads: Each type used in the system.
5. Addressable Monitor and Control Modules: Each type used in the system.
6. Notification Appliances: Each size and type used in the system.
7. Output Relays.

B. Provide one data cable for connecting a lap top computer to the fire alarm control panel's RS-232 communications card so that the Owner can perform panel programming.

1.10 RECORD DOCUMENTS

A. Submit four copies of record drawings showing the locations of fire alarm panels, devices and appliances, the locations of end-of-line resistors and junction boxes, the addresses of addressable devices, the tap settings of audible notification appliances, the intensity ratings of visual notification appliances, the sizes of conduits and conductors, circuit numbers, and deviations from the design.

B. Submit four printed copies of the final system configuration list showing inputs, outputs, addresses, custom location labels, device configurations, and program logic.

C. Provide an electronic file storage device (USB drive, SD card, etc.) containing the following final system software:

1. The master program generic to the model of system being provided.
2. The building specific program containing the unique information for the system being provided.
3. A software license and the system passwords required by the Owner to perform programming changes.

1.11 OPERATIONS AND MAINTENANCE MANUALS

A. Submit for approval four copies of operations and maintenance manuals for the specified system and equipment prior to startup. The manuals shall be the same manuals used by the Manufacturer's field service technicians. The manuals shall be marked to indicate the specific models, sizes, types and options that were provided. Manuals not so marked will be rejected.

1.12 QUALITY ASSURANCE

A. The fire alarm system shall be the standard product of a single fire alarm system manufacturer who has been producing this type of equipment for at least 10 years, and has a fully equipped service organization within 150 miles of the Owner. Each component shall display the manufacturer's name.

B. Each fire alarm system component shall be listed under the appropriate standard of Underwriters Laboratories and shall bear a UL label.

C. The fire alarm system shall be UL labeled as a system and approved by FM Global.

D. For classroom, in-patient medical, and Housing projects, the fire alarm system shall also be approved by the State of Michigan Bureau of Fire Services.

1. Submit shop drawings to the Michigan Bureau of Fire Services for approval.
2. Arrange for a Michigan Bureau of Fire Services Inspector to inspect the system installation and testing.
3. Submit to the Owner a copy of the FS-12A Form submitted to the Michigan Bureau of Fire Services.

E. The fire alarm system shall comply with the requirements of the National Fire Alarm Code, the Owner’s Inspection Authorities and with the Manufacturer's instructions.

1.13 WARRANTY

A. Provide a complete parts and labor warranty for twelve months from the date of final acceptance of the system by the Owner.

B. Provide a telephone response to Owner's questions within 4 hours and on-site assistance within 24 hours.

C. Permit Owner's Fire Alarm Technicians to perform temporary bypasses and emergency repairs on the system without voiding the warranty.

PART 2 - PRODUCTS

2.1 MANUFACTURERS

A. Acceptable Manufacturers and Models:

1. EST Model EST-3.
2. Honeywell Model XLS3000.
3. SimplexGrinnell Model 4100 Series.
4. National Time & Signal Model On-Point.
5. Notifier ONYX 3030 Series.
6. Siemens Model XLS.

2.2 SYSTEM COMMUNICATIONS

A. The fire alarm control panel shall communicate with each addressable initiating and control device individually via shielded twisted pair signaling line circuits. EST SIGA-Loop or SimplexGrinnell MAPNET II or IDNET.

B. Each signaling line circuit shall be capable of accessing up to 127/250 addressable devices.

C. Each signaling line circuit shall allow up to 10,000 feet of wire length to the furthest addressable device.

D. Communications shall use a broadcast polling protocol to allow t-tapping of the circuit except where Class A wiring is required. T-taps shall be limited to 64 per loop.

E. Communications shall be completely digital and shall include parity data bit error checking routines for address codes and check sum routines for the data transmission protocol.

F. Each device shall be uniquely identified by a device address.

G. There shall be no limit to the number of initiating devices which may be activated simultaneously.

H. Each device shall be individually annunciated at the panel. Annunciation shall include the following conditions for each device.

1. Alarm, supervisory or trouble condition.
2. Open, short or ground.
3. Device failure or incorrect device installed.

2.3 FIRE ALARM CONTROL PANEL

A. The fire alarm control panel shall be modular with solid state, microprocessor based electronics.

B. The panel shall display only those primary controls and displays essential to operation during a fire alarm condition.

C. The panel shall include a LCD digital display, with a minimum of 80 characters.

1. The display shall be backlit for enhanced readability. It shall not be lit during an AC power failure unless an alarm condition occurs or there is keypad activity.
2. The display shall support both upper and lower case letters. Lower case letters shall be used for soft key titles and for prompting the user. Uppercase letters shall be used for system status information. A cursor shall be visible when entering information.

D. A panel audible signal shall sound during alarm, supervisory, or trouble conditions. This audible signal shall sound differently during each condition to distinguish one condition from another. The audible signal shall also sound differently during each key press to provide audible feedback (chirp) indicating that the key has been pressed properly.

E. The system program shall be stored in a non-volatile flash EPROM memory within the panel. Loss of primary and secondary power shall not erase the program stored in memory.

1. The program shall be capable of selective input/output control functions.
2. The program shall enable initiating devices to be individually configured on site to provide either alarm and trouble, supervisory and trouble, alarm only, supervisory only, trouble only, current limited alarm, no alarm, normally closed device monitoring, a non-latching circuit or an alarm verification circuit.
3. The program shall enable initiating devices to be disabled or enabled individually.

F. The panel or the field devices shall determine the alarm decision for each detector by comparing the detector value to stored values.

1. The panel shall automatically maintain a constant smoke obscuration sensitivity in percent of smoke obscuration format for each detector.
2. The panel shall maintain a moving average of each smoke detector's smoke chamber value to automatically compensate for dust and dirty conditions that could affect detection operation.
3. The smoke obscuration sensitivity shall be adjustable to within 0.3 percent of either limit of the UL window (0.5 percent to 4.0 percent) to compensate for any environment.
4. When a detector's average value reaches a predetermined value, a "MAINTENANCE ALERT" condition shall be audibly and visually indicated at the panel. The LED on the detector base shall glow steady giving a visible indication at the detector location. If a dirty detector is left unattended and its average value increases to a second predetermined value, a "TROUBLE" condition shall be indicated at the panel. To prevent nuisance alarms, these dirty conditions shall in no way decrease the amount of smoke obscuration necessary for system activation.

5. The panel shall continuously perform an automatic self-test routine on each detector which shall functionally check detector electronics and ensure the accuracy of the obscuration values being transmitted to the panel. Any detector that fails this test shall indicate a "SELF TEST ABNORMAL" or "TROUBLE" condition at the panel.
6. Each detector shall be scanned by the panel for its type identification to prevent inadvertent substitution of another detector type. The panel shall operate with the installed device but shall initiate a "WRONG DEVICE" or "TROUBLE" condition until the proper type is installed or the programmed detector type is changed.
7. An operator at the panel, having a proper access level, shall have the ability to manually access the following information for each detector.
    a. Device type.
    b. Device status.
    c. Present average value.
    d. Peak detection values.
    e. Present sensitivity selected.
    f. Detector range (normal, dirty, etc.).
8. An operator at the panel, having a proper access level, shall have the ability to perform the following for each detector:
    a. Enable or disable the point.
    b. Clear peak detection values.
    c. Clear verification tally.
    d. Control a detector's relay driver output.
9. The panel shall be programmable to automatically change the sensitivity settings of each detector based on time-of-day and day-of-week (for example, to be more sensitive during unoccupied periods and less sensitive during occupied periods). There shall be seven sensitivity settings available for each detector.
10. The panel shall be programmable for a pre-alarm or two-stage function. This function allows an indication to occur when, for example, a detector with a 3 percent set point reaches a threshold of 1.5 percent smoke obscuration.
11. Smoke detectors shall be provided with the ability for alarm verification. When in alarm verification mode, only a verified alarm shall initiate the alarm sequence operation.
    a. The activation of a smoke detector shall initiate an alarm verification operation whereby the panel resets the activated detector and waits for a second alarm activation. If, within an adjustable time delay, a second alarm is reported from the same or any other smoke detector, the system shall process the alarm. If no second alarm occurs within the time delay, the system shall resume normal operation.
    b. The alarm verification shall operate only on smoke detector alarms. Other activated initiating devices shall be processed immediately. The alarm verification operation shall be selectable by device.
    c. The panel shall have the capability to display the number of times a device has gone into a verification mode.

d. Detectors in alarm verification mode shall have the ability of being divided into different groups whereby any two activations from a group shall cause the panel to follow its programmed alarm sequence.

G. The panel shall have four pass code controlled access levels. Pass codes shall be entered using the panel key pad.

1. To maintain security when entering a pass code, the digits entered shall not be displayed.
2. When a correct pass code is entered, an "ACCESS GRANTED" message shall be displayed. The access level shall be in effect until the keypad is inactive for 10 minutes or the operator logs out.
3. Should an invalid code be entered, the operator shall be notified with a message and shall be allowed up to two more chances to enter a valid code. After three unsuccessful tries, an "ACCESS DENIED" message shall be displayed.
4. Access to a level shall only allow the operator to perform actions within that level and actions of lower levels, not actions of higher levels.
5. Access levels shall be associated with the following functions:
   a. Alarm silence.
   b. System reset.
   c. Set time and date.
   d. On/Off/Auto control selection.
   e. Manual control.
   f. Disable and enable circuits and devices.
   g. Clear historical logs.
   h. Walk test.
   i. Change alarm verification.
   j. Change detector sensitivity.
   k. Function keys.
6. An access level shall also be associated with acknowledge keys. If the operator presses an Acknowledge key with insufficient access, an error message shall be displayed. The points on the log shall scroll with each key press, but the points shall not be acknowledged.

H. The panel shall have the ability to store a minimum of 300 events in an alarm log plus a minimum of 300 events in a separate trouble log. These events shall be stored in a battery protected random access memory. Real time and date shall accompany history event recordings.

I. The panel shall supervise subordinate module LED’s for burnout or disarrangement. Should a problem occur, the panel shall display the module and LED location numbers to facilitate location of that LED.

J. The panel shall have function keys programmed as follows for disabling and enabling circuits or groups of devices for maintenance or testing purposes. While circuits or devices are disabled, the panel shall indicate "TROUBLE".

1. F1: Disable smoke detectors by floor.
2. F2: Disable duct smoke detectors.
3. F3: Disable sprinkler system flow switches.
4. F4: Disable horns/strobes or speakers/strobes by floor.
5. F5: Disable beam detectors.
6. F6: Disable smoke detector sounder bases.
7. F7: Disable hood suppression systems.

8. F8: Disable elevator recall.

K. The system shall be capable of being walk tested by one person.

1. The activation of an initiating device under test shall be silently logged as an alarm or supervisory condition in the historical log. The panel shall automatically reset itself after logging the abnormal condition.
2. The momentary disconnection of an initiating device or notification appliance shall be silently logged as a trouble condition in the historical log. The panel shall automatically reset itself after logging the trouble condition.
3. The walk test sequence shall have the ability to activate the notification appliances for a maximum of 2 seconds upon the activation of an initiating device under test. If this option is selected, any momentary opening of the initiating device circuit or a notification appliance circuit shall cause the notification appliances to sound for 4 seconds to indicate the trouble condition.
4. Should the walk test mode be on for an inappropriate amount of time, the panel shall automatically revert to normal mode.
5. Should an abnormal condition occur from an active point not in walk test mode, the system shall perform its standard programmed alarm, supervisory or trouble sequences.

L. The panel enclosure shall be equipped with opaque door panels and locks providing security from tampering.

2.4 NODE AND NAC PANELS

A. Node and NAC panels shall be modular with solid state, microprocessor based electronics, operator interfaces, power supplies, audio generators, amplifiers, battery chargers and batteries as required. All components shall be supervised.

2.5 BATTERIES

A. Batteries shall be lead calcium and supervised so that a failure produces a "TROUBLE" signal.

2.6 REMOTE ANNUNCIATOR

A. The remote annunciator shall duplicate the backlit LCD display; the alarm acknowledge, supervisory acknowledge, trouble acknowledge, alarm silence, and system reset pushbuttons; the alarm, supervisory, and trouble audible signals; the alarm, supervisory, trouble, and power "on" LED's; and the programmable function keys of the fire alarm control panel. A key "enable" switch or door lock, keyed to match the fire alarm control panel door lock, shall permit activating or deactivating the controls.

B. A remote microphone shall be included when the fire alarm system includes emergency voice/alarm communications, along with the same pushbuttons as the fire alarm control panel for selecting pre-recorded voice messages, and the same controls to choose total building or selected areas communications.

2.7 ADDRESSABLE SPOT DETECTOR BASES

A. Spot detector mounting bases shall be individually addressable, suitable for two wire operation, with a twist-lock head locking feature a DIP switch or electronic addressing means, and an LED that provides power "on", alarm and trouble indications. The bases shall be listed for ceiling and wall mounting. Removal of the detector head shall cause a trouble condition at the panel.

B. Where shown, the bases shall include an auxiliary relay that is controlled from the panel.

C. In sleeping rooms, the base shall include a piezoelectric sounder that is controlled from the panel.

D. In corridors outside of sleeping rooms, the base with its head shall be protected by a vandal-resistant cage.

E. In corridors, locker rooms, and meeting rooms of athletic facilities, the base with its head shall be protected by a vandal-resistant cage.

F. When bases are not in plain view, bases shall be connected to remote alarm indicators mounted in plain view at 48 inches above the floor.

2.8 MULTISENSOR SMOKE DETECTOR HEADS

A. Multi-sensor type smoke detector heads shall include sampling and reference ionization chambers with a single radioactive source, a photoelectric sensor and a programmable heat detector. The detectors shall support at least four levels of sensitivity selectable at the panel and 360 degree smoke entry.

2.9 PHOTOELECTRIC SMOKE DETECTOR HEADS

A. Photoelectric type smoke detector heads shall include a pulsed LED light source and a silicon photodiode receiver, at least seven levels of sensitivity selectable at the panel, an integral insect screen and 360 degree smoke entry. This type of detector shall be installed in all duct detectors.

2.10 HEAT DETECTOR HEADS

A. Heat detector heads shall include combination rate-of-rise and rate compensated fixed temperature sensing, two levels of rate-of-rise sensitivity selectable at the panel, and an independent 135 degrees F fixed temperature set point. Heat detector heads shall be self-restoring.

B. Heat detector heads for steam tunnels, cage wash areas and dish machine areas shall have a 135 degrees F fixed temperature set point and shall be self-restoring.

2.11 DUCT DETECTORS

A. Duct detectors shall be individually addressable and consist of a housing, sampling tubes, a baffle and a detachable detector head. Duct detectors shall include an alarm LED, a local test switch, and an auxiliary SPDT relay for ventilation system control. Duct detectors shall be resettable by actuating the panel reset pushbutton. The sampling tubes shall be capable of being cleaned through the housing cover.

B. The detector heads shall be photoelectric as specified above, but shall be capable of accepting ionization detector heads.

C. When not in plain view, duct detectors shall include remote alarm indicators and test switches mounted in plain view at 48 inches above the floor.

2.12 BEAM DETECTORS

A. Photoelectric projected beam detectors shall be individually addressable and consist of separate transmitter and receiver units capable of long range coverage of up to 350 feet. Beam detectors shall include alarm and trouble dry auxiliary contacts, and normal, alarm and trouble LED status indicators. Beam detectors shall include internal bore sights, automatic calibration, six sensitivity settings, automatic compensation for temperature and lens contamination, and a trouble indication upon either a total obscuration or an obscuration of 50 percent of the alarm set point. Beam detectors shall be suitable for four wire operation utilizing 24 volt DC power from the panel, and resettable by actuating the panel reset pushbutton.

2.13 MANUAL PULL STATIONS

A. Manual pull stations shall be individually addressable, suitable for two wire operation, with a high impact red Lexan body and raised white lettering. Stations shall include an ADA compliant single action operating mechanism with a mechanical latch to hold an operated station open until reset.

B. Reset shall be accomplished through use of a key common to the panel or a small flat-blade screwdriver. Stations which use allen wrenches or special tools to reset are not acceptable. The point of reset shall be front accessible so stations with tamper-resistant covers can be reset easily.

2.14 MONITOR MODULES

A. Monitor modules for individual two wire contact monitoring shall be individually addressable, suitable for two wire operation, with a DIP switch or electronic addressing means, and a programmable latch feature for monitoring momentary contacts. Monitor modules shall monitor a single normally open dry contact using a Class B, Style B, initiating device circuit.

B. Monitor modules for zone or four wire device monitoring shall be individually addressable, suitable for four wire operation utilizing 24 volt DC power from the panel, and with a DIP switch or electronic addressing means. Zone monitor modules shall monitor multiple normally open dry contacts using a Class B, Style B, two wire initiating device circuit, or monitor a four wire device using a Class B, Style D, four wire initiating device circuit.

2.15 CONTROL MODULES

A. Control modules shall be individually addressable with DIP switches or electronic addressing means. Control modules shall provide either one normally open and one normally closed contact or a Form C contact per digital output. Control modules may have more than one digital output per module if each output has a unique address. Contacts shall be rated 0.5 amps at 120 volts AC or 2 amps at 28 volts DC resistive and shall be controlled by the panel.

2.16 HORNS

A. Horns shall be electronic, rated 24 volts DC, with a piezoelectric driver set to produce a three-pulse temporal pattern evacuation tone with a sound level of 101 dBA at 10 feet, a red, semi-flush body capable of wall or ceiling mounting.

B. Horns in rodent rooms shall be set to generate a slow whoop or warble sound with a peak frequency below 500 Hz. Horns shall be of heavy-duty industrial construction and shall be UL listed for indoor and outdoor applications. EST Model 5530MD-24AW only.

2.17 SPEAKERS

A. Speakers shall be rated 125 to 12,000 Hertz, include four taps rated at from 1/4 to 2 watts, produce a sound level of 82 dBA at 10 feet when set at the 1/2 watt tap, and with a semi-flush body capable of wall or ceiling mounting..

B. Speakers for locations with high ambient noise may be high efficiency horns rated 500 to 6,000 Hertz minimum, 10 watts minimum, include four or more taps, produce a sound level of 106 dBA minimum at 1 meter when set at the 1 watt tap, and be capable of wall or ceiling mounting.

2.18 STROBES

A. Strobes shall be rated 15, 30, 60, 75, 110, or 177 candela as shown for proper illuminance, with a 1 Hertz flash rate, Xenon flash tube, white body, clear Lexan lens with red "FIRE" or international fire symbol lettering, capable of being synchronized, and capable of wall or ceiling mounting.

2.19 COMBINATION HORN/STROBES AND SPEAKER/STROBES

A. Combination horn/strobes and speaker/strobes shall consist of the horns, speakers and strobes specified above, but combined on a single mounting plate. Combination units used outdoors and in wet areas shall be waterproof and mounted to waterproof back boxes.

2.20 DOOR HOLD-OPEN POWER SUPPLY

A. The door hold-open power supply shall produce 24 volts DC of sufficient amperage to provide 0.4 amps of current to every door hold-open device being controlled. The power supply shall be supervised and capable of withstanding the inrush current that will occur when the door hold-open devices are energized.

B. The output of the power supply shall be distributed by individually fused circuits. Fuse each circuit at 5 amps.

C. The power supply shall release the held open doors upon a fire alarm or an AC power failure.

2.21 EMERGENCY VOICE/ALARM COMMUNICATIONS

A. Emergency voice/alarm communications shall include audio control modules for evacuation tone and voice message generation, controls to choose total building or selected areas communications, audio amplifiers, a local microphone, and a remote microphone at each remote annunciator. All of the components except for the remote microphones shall be located in or adjacent to the fire alarm control panel.

B. The audio control module default mode shall provide for automatic total building fire alarm evacuation. The evacuation tone shall consist of a three-pulse temporal pattern followed by a pre-recorded fire alarm voice message. At the end of each voice message, the evacuation tone shall resume. The evacuation tone and voice message shall sound alternately until the alarm silence pushbutton at the fire alarm control panel or remote annunciator has been pressed. Audio tones and voice messages shall be digitally transmitted between nodes.

C. The audio control modules shall provide for manual total building or selected area live voice communications. Upon keying of the local or a remote microphone, a three second continuous alert tone shall sound over the speakers indicating a live voice message will occur.

D. The evacuation and alert tones shall be digitally generated by programmable software so that changes can be made without component rewiring. The pre-recorded voice messages shall be stored digitally in non-volatile EPROM memory.

E. The evacuation tone for rodent rooms only shall be produced by a separate audio control module and amplifier that generate a slow whoop or warble sound with a peak frequency below the hearing range of rodents (i.e. 500 Hz).

F. Audio amplifiers shall have a frequency response of 125 Hz to 12,000 Hz minimum.

G. Microphones shall be of a hand-held, push-to-talk, noise-canceling type with a frequency range of 200 Hz to 4000 Hz and a self-winding five foot coiled cable. An LED shall indicate the microphone push-to-talk pushbutton has been pressed and the speaker circuits are ready for transmission.

H. Remote microphones shall be enclosed in remote annunciator cabinets with lockable doors.

1. Remote microphones shall duplicate the manual voice transmission capability of the local microphone at the fire alarm control panel. The fire alarm control panel microphone shall have priority over any remote microphones.
2. The remote microphone cabinets shall include controls for total building or selected areas communications.

I. Should a Fire Department telephone communication system be provided, the telephones system shall be capable of being patched to the emergency voice/alarm communications system and controlled at the fire command center.

2.22 FIRE DEPARTMENT TELEPHONE COMMUNICATIONS

A. Fire Department telephone communications shall consist of a minimum of eight dedicated communications circuits between a fire command center communications panel and remotely located emergency telephone jacks, a master telephone handset and five pluggable telephone handsets.

B. The communications panel shall include a master telephone controller for processing of two-way communications. This module shall include a circuit selector switch and "Call" and "Trouble" LED indicators for each circuit, an audible device for call and trouble signaling, a trouble silence switch with ring-back, and an LED trouble indicator. Circuit supervision modules shall be included to electrically supervise for shorts, opens, and grounds of circuit wiring.

C. The system shall be capable of handling single or simultaneous conversations with all telephones connected into the system. The circuits shall be so designed to prevent static, hum, or other interferences to clear, intelligible two-way conversations. The communications shall be transported digitally between devices.

D. The act of plugging a handset into an emergency telephone jack shall cause the appropriate circuit indicator LED to flash and a distinctive audible device to sound at the communications panel. The subsequent picking up of the master telephone and selection of the proper circuit shall silence the pulsing sound, cause the circuit indicator LED to latch on, and couple the remote telephone to the master telephone. Two or more telephones shall be capable of being connected into an active conversation at the discretion of the operator.

E. Attempting to use a subsequent telephone on the same circuit shall not cause the pulsing sound to activate if any two-way communications are already established. Any new circuits activated shall, however, cause their circuit indicator LED’s to flash until acknowledged.

F. Unplugging the handsets in use and returning the related circuit selector switches to the normal position shall cause the restoration of normal supervisory functions. If any remote telephone remains plugged in, the appropriate circuit indicator LED shall flash and the pulsing sound shall resume at the communications panel.

G. The master telephone handset shall be recessed within a protective enclosure at the communications panel.

H. A single line circuit shall be provided to a jack in each stairwell at each floor, in each elevator car, in each elevator lobby, at each area of refuge, at the emergency generator location and at the fire pump location. Emergency telephone jacks shall be mounted on a stainless steel single gang plate engraved with the words "Fire Emergency Telephone".

I. Furnish an emergency telephone jack for installation in each elevator car. Wiring from the elevator controls to each elevator car and installation of the jacks will be provided by the elevator contractor.

J. Provide five pluggable emergency telephone handsets with self-winding five foot cords within a storage cabinet mounted at the fire command center. Key the cabinet to match the fire alarm control panel.

2.23 ADD ALTERNATE FOR BUILDING-WIDE MASS NOTIFICATION

A. If the Add Alternate is accepted, add any necessary equipment, initiating devices, notification appliances, conduit, wiring, programming, and appurtenances to the base fire alarm system scope of work to incorporate building-wide mass notification into the fire alarm system.

1. Comply fully with National Fire Alarm Code NFPA 72 emergency communications systems requirements including Annex and Supplement requirements.
2. The system and its components shall be UL listed.
3. Provide speakers for audible notification appliances in lieu of horns if the base fire alarm system scope of work specifies horns. Provide sufficient speakers to meet NFPA 72 voice intelligibility requirements.
4. Provide combination amber lens (for alert) and clear lens (for fire alarm) strobe lights for visual notification appliances in lieu of providing the base bid clear lens (for fire alarm) strobe lights.
5. Provide the following additional features in the main fire alarm control panel and in each remote fire alarm annunciator panel.
    a. Emergency voice/alarm communications and a microphone for DPSS and OSEH Fire Marshal use if not required by the base bid scope of work.
    b. The ability to generate a building-wide three second continuous alert tone. This alert tone shall be significantly different from the fire alarm system's three-pulse temporal pattern evacuation tone.
    c. A minimum of 8 pushbuttons to initiate the amber alert strobe lights and the building-wide evacuation or alert tone followed by a unique pre-recorded voice message.
        1) Actuation of any pushbutton shall override any fire alarm notification and instead initiate the amber alert strobe lights and the building-wide evacuation or alert tone over the fire alarm system speakers. The associated pre-recorded voice message shall alternate with the tone.
        2) Alarm and supervisory signals shall be sent through MOSCAD to DPSS.

3) At any time during the alert, actuation of any microphone shall permit building-wide live voice announcements to be made. If at any time a remote annunciator panel microphone is keyed simultaneously with the main fire alarm control panel microphone, the main fire alarm control panel microphone shall have priority.
4) The strobe lights shall continue to flash and the tone and pre-recorded voice message shall continue to sound until the fire alarm system is reset.

d. The tone and pre-recorded voice message shall be as follows for each pushbutton:
1) Alert tone alternating with "Your attention please - A tornado warning has been issued. Take shelter in this building now. Remain calm and do no run. Take shelter now."
2) Alert tone alternating with "Your attention please - An armed intruder has been reported in this area. Lockdown now."
3) Alert tone alternating with "Your attention please - An active shooter has been reported in this area. Lockdown now."
4) Evacuation tone alternating with "Your attention please - An emergency has occurred. Evacuate the building now. Remain calm and do not run. Evacuate now."
5) Alert tone alternating with "Your attention please - An emergency has occurred. Please remain in place until further notice. Please remain where you are."
6) Alert tone alternating with "Your attention please - This is an all clear. The emergency has been resolved. Resume normal operations."
7) Alert tone alternating with "Your attention please - This is a test of the building mass notification system. This is only a test."
8) (Spare for project-specific use.)

6. Provide a remote microphone cabinet with microphone for Facility Manager use at the location shown on the drawings. The cabinet shall include the following features:
a. Provide a minimum of 8 pushbuttons. These pushbuttons shall be identical to those in the main fire alarm panel and in each remote fire alarm annunciator panel. Each pushbutton shall be capable of initiating the building-wide evacuation or alert tone followed by the same unique pre-recorded voice message.
1) Actuation of any pushbutton shall override any fire alarm notification and instead initiate the amber alert strobe lights and the building-wide tone over the fire alarm system speakers. The associated pre-recorded voice message shall alternate with the tone.
2) Alarm and supervisory signals shall be sent through MOSCAD to DPSS.

3) At any time during the alert, actuation of the facility manager's microphone shall permit building-wide live voice announcements to be made. If at any time the facility manager's microphone is keyed simultaneously with the main fire alarm control panel or any remote fire alarm annunciator panel microphone, the fire alarm panel microphone(s) shall have priority.
4) The strobe lights shall continue to flash and the tone and pre-recorded voice message shall continue to sound until the fire alarm system is reset.

b. Provide a uniquely keyed cabinet door lock and special facility manager keys so a fire alarm panel key or a special facility manager key can access this cabinet, but a facility manager's key cannot access the other fire alarm panels.

7. Provide the capability inside the main fire alarm control panel to add a future interface module or circuit card. This interface shall permit DPSS to actuate the amber alert strobe lights, actuate the building-wide evacuation or alert tone, actuate any of the pre-recorded voice messages, and make live voice announcements from a head end device located at one or more DPSS remote locations. This capability shall include:
   a. Physical space inside the fire alarm control panel.
   b. Power supply capacity.
   c. Battery capacity.
   d. Means to plug the interface into the fire alarm control panel circuitry.
8. Provide system interconnecting raceways, wiring and routing in compliance with the system "survivability" requirements contained in NFPA 72.

PART 3 - EXECUTION

3.1 SYSTEM INTERRUPTIONS

A. Coordinate with the U-M Fire Protection Shop (734-647-2046) before performing any work affecting an existing fire alarm system. Operating, programming, modifying, or impairing an existing system without approval of the U-M Fire Protection Shop is strictly prohibited.

B. When renovating a fire alarm system, test the system to document its condition before changes are made. Maintain operation of fire alarm system devices outside of the work area.

C. When replacing a fire alarm system, maintain operation of the existing system until acceptance of the new system. If operation of the existing system cannot be maintained and the building is occupied, provide a 24 hour/day fire watch until the new system is accepted.

1. Notify the U-M Fire Protection Shop (734-647-2046), the U-M DPSS (734-763-1131), the U-M Fire Marshal (734-647-1143) and the Michigan Bureau of Fire Services (if applicable) when a fire watch is being performed.

2. Perform the fire watch in accordance with U-M Fire Marshal and Michigan Bureau of Fire Services requirements.

D. Coordinate with the U-M Key Office (734-764-3481) before performing any work affecting existing electrically controlled doors.

3.2 INSTALLATION

A. Provide wiring in conduit in accordance with Sections 260533 and 260513, and Manufacturer's instructions.

B. Provide wiring in conduit or provide fire alarm-rated MC cables in accordance with Sections 260533 and 260513, and Manufacturer's instructions.

C. Provide wiring and raceways as follows and in accordance with Sections 260533 and 260513 and Manufacturer's instructions.

1. Concealed in walls, exposed on walls up to 8' AFF, and above non-accessible ceilings - provide wiring in conduit.
2. Above accessible ceilings and above 8' AFF in unfinished spaces - provide open wiring in J-hooks. Provide conduit sleeves where open wiring penetrates walls and floors.

D. For systems that provide partial evacuation or relocation of occupants rather than full evacuation, protect power supply and notification appliance circuits from attack by fire until they enter the notification zone they serve. Provide 2-hour rated cable assemblies or protect circuits in 2-hour rated shafts, enclosures or sprinklered stairwells in accordance with Sections 260533 and 260513.

E. Circuits may be T-tapped only where shown on the manufacturer's wiring diagrams.

F. Provide waterproof back boxes with gaskets for devices and appliances installed outdoors or in wet or wash-down areas.

G. Paint fire alarm junction boxes, covers and fittings red or provide red conduit throughout, except fire alarm raceways exposed in finished areas may be painted to match wall color.

H. Modifications to fire alarm control panels, node panels, NAC panels and remote annunciator panels shall be made by a Manufacturer's Representative.

I. Final connections to the fire alarm system components and system programming shall be performed by Fire Alarm Technicians with NICET Level II or higher certification.

J. Label fire alarm panels with the room numbers, electrical panel numbers, and circuit breaker numbers feeding them.

K. Paint the handles of circuit breakers feeding fire alarm panels red, and install handle locks.

L. Smoke and heat detectors shall not be installed until after construction clean-up is completed.

1. When renovating an existing system, remove and store existing detectors during construction activities.
2. Detectors installed prior to construction clean-up shall be cleaned by the manufacturer or replaced.

3.3 TESTING

A. Demonstrate complete operation of the fire alarm system in accordance with NFPA 72, NFPA 101 (classroom, in-patient medical, and Housing projects only), the Michigan Building Code, and Manufacturer's instructions. Notify the Owner’s Representative 3 working days in advance of the test.

1. The test shall be witnessed by a U-M Fire Marshal, a U-M Electrical Inspector, and the U-M Fire Protection Shop.
2. Especially on fire alarm renovation projects, the U-M Fire Protection Shop may participate in or direct the testing activities.
3. On classroom, in-patient medical, and Housing projects, also include an Inspector from the Michigan Bureau of Fire Services.

B. Submit a signed and dated NFPA 72 test report to the Electrical Inspector prior to acceptance of the fire alarm system by the Owner.

C. On classroom, in-patient medical, and Housing projects, also submit a signed and dated FS-12A Form to the Michigan Bureau of Fire Services.

3.4 COMMISSIONING

A. Perform Commissioning activities per Related Sections above.

3.5 TRAINING

A. Provide the Owner’s Fire Alarm Technicians with classroom training on the operation and maintenance of this model of system. This training shall be by the Manufacturer and shall be the same training as given to the Manufacturer's field service technicians. The University will pay the travel costs to the Manufacturer's training site. If the Owner's Technicians have already received operations and maintenance training from the manufacturer on this model of system, this training requirement will be waived.

B. Provide the Owner’s Fire Alarm Technicians with classroom training on the programming of this model of system. This training shall be by the Manufacturer and shall be the same training given to the Manufacturer's field service technicians. The University will pay the travel costs to the Manufacturer's training site. If the Owner's Technicians have already received programming training on this model of system, this training requirement will be waived.

C. Train the Owner’s Fire Alarm Technicians on unfamiliar components installed in this system.

D. Walk the Owner's Fire Alarm Technicians through the building and identify the locations of fire alarm devices hidden from plain view.

E. Train DPSS, Housing Security if applicable, and the U-M Fire Marshal on the basic operation of the system, including how to acknowledge audible notification appliances after an alarm.

F. Train DPSS, Housing Security if applicable, and the U-M Fire Marshal on how to override the smoke control systems, on how to use the emergency voice/alarm communications, and on how to use the Fire Department telephone communications systems. Invite representatives from the Ann Arbor Fire Department to this training.

G. Train the Facility Manager on how to use the emergency voice/alarm communications system, and how to use the mass notification system if provided.

END OF SECTION 283100

UNIVERSITY OF MICHIGAN
ARCHITECTURE, ENGINEERING AND CONSTRUCTION

ARCHITECTURE & ENGINEERING
326 East Hoover, Mail Stop B
Ann Arbor, MI 48109-1002
Phone: 734-764-3414
Fax: 734-936-3334

BuildingName
The Description of the Project
P00000000 0000

SPECIFICATION DIVISION 28

NUMBER SECTION DESCRIPTION

DIVISION 28 ELECTRONIC SAFETY AND SECURITY
SECTION 283102 - FIRE DETECTION AND ALARM SYSTEM (HOSPITAL PROJECTS)

END OF CONTENTS TABLE

DIVISION 28 ELECTRONIC SAFETY AND SECURITY
SECTION 283102 - FIRE DETECTION AND ALARM SYSTEM (HOSPITAL PROJECTS)

DELETE FROM AND ADD TO THIS SECTION TO MAKE IT PROJECT SPECIFIC. HIDDEN TEXT DIRECTIONS INDICATE SOME BUT NOT ALL OF THE REQUIRED EDITING. DELETE THE HIDDEN TEXT DIRECTIONS BEFORE PRINTING FOR PUBLICATION.

VERIFY THE TYPES, QUANTITIES AND LOCATIONS OF FIRE ALARM COMPONENTS SHOWN ON PLAN DRAWINGS COMPLY WITH THE SYSTEM DESIGN REQUIREMENTS BELOW. REFER TO THE UMHHC DESIGN GUIDELINES FOR SPECIAL REQUIREMENTS THAT MAY NEED TO BE ADDED.

PART 1 - GENERAL

1.1 RELATED DOCUMENTS

INCLUDE PARAGRAPH 1.1.A AND B IN EVERY SPECIFICATION SECTION. EDIT RELATED SECTIONS 1.1.B TO MAKE IT PROJECT SPECIFIC.

A. Drawings and general provisions of the Contract, Standard General and Supplementary General Conditions, Division 01 Specification Sections, and other applicable Specification Sections, in particular the Related Sections listed below, apply to this Section.

IN 2 BELOW, SELECT PROPER COMMISSIONING SPEC SECTION NUMBER APPLICABLE TO THE PROJECT OR DELETE IF Cx IS NOT REQUIRED.

B. Related Sections:

1. Section 017823 - Operation and Maintenance Manual
2. Section 019100/019110 - Commissioning
3. Section 260513 - Medium, Low & Control Voltage Cables
4. Section 260526 - Grounding and Bonding for Electrical
5. Section 260533 - Electrical Materials and Methods
6. Section 260800 - Electrical Acceptance Tests

1.2 SUMMARY

DUPLICATE PARAGRAPH 1.2.A IN THE GENERAL NOTES ON THE FIRST SHEET OF THE ELECTRICAL DRAWINGS.

A. The project delivery method for fire detection and alarm systems shall be by design-build. This specification section and accompanying drawings establish the minimum requirements and boundary for the design-build scope of work. Provide all equipment, devices, appliances, wiring and materials necessary for a complete and expandable system which adheres to applicable codes, standards and University of Michigan requirements.

1. The quantities, locations, types, conditions and manufacture of existing fire alarm equipment, devices and appliances shown are for information only and shall be field verified.

2. The quantities, locations and types of new fire alarm equipment, devices and appliances shown are minimum requirements. Provide all additional equipment, devices, appliances, materials and labor required to meet applicable codes.
3. Coordinate with and provide submittals to the Michigan Bureau of Fire Services, Ann Arbor Fire Department, U-M Fire Marshal and FM Global as required. Coordinate room occupancy and space utilization with the building's Facility Manager.

IF THE BUILDING WILL REMAIN OCCUPIED DURING THIS WORK, INCLUDE THE FOLLOWING PARAGRAPH.

4. Maintain the existing fire alarm system in service while the new work is installed, tested and made operational.

ON FIRE ALARM RENOVATION PROJECTS, DELETE ALL OF 1.2.B AND THE NON-APPLICABLE PARAGRAPHS OF 1.2.C.

B. Provide a new fire alarm system with the following features:

1. A main fire alarm control panel (FACP).
2. Node and notification appliance circuit (NAC) panels.
3. Automatic and manual initiating devices.
4. Audible and visual notification appliances.
5. Control inputs and outputs to ventilation systems.
6. Status monitoring of fire pump controllers, sprinkler flow switches, and sprinkler valve tamper switches.
7. Alarm, supervisory, trouble, fire pump running and maintenance alerts outputs including addresses and locations of initiating devices to the University of Michigan Hospitals and Health Centers (UMHHC) Facility Command Center (UHFCC) located in University Hospital Building Room 1A203.
8. Remote alarm silence and remote emergency voice/alarm communications capability from the UHFCC.
9. Raceways, junction boxes, wiring and accessories as shown on the drawings and as required for a complete and operable system.
10. System programming in accordance with the system's sequence of operation.
11. System programming and testing required for the system to communicate with the operator interfaces in UHFFC.

ON PROJECTS PROVIDING A NEW FIRE ALARM SYSTEM, DELETE ALL OF 1.2.C.

C. Renovate the existing fire alarm system by providing the following:

1. A pre-renovation test of the existing system to document the condition of the system before it is changed.
2. A main fire alarm control panel (FACP).
3. Node and notification appliance circuit (NAC) panels.
4. Automatic and manual initiating devices.
5. Audible and visual notification appliances.
6. Control inputs and outputs to ventilation systems.
7. Status monitoring of fire pump controllers, sprinkler flow switches, and sprinkler valve tamper switches.

8. Alarm, supervisory, trouble, fire pump running and maintenance alerts outputs including addresses and locations of initiating devices to the University of Michigan Hospitals and Health Centers (UMHHC) Facility Command Center (UHFCC) located in University Hospital Building Room 1A203.
9. Remote alarm silence and remote emergency voice/alarm communications capability from the UHFCC.
10. Raceways, junction boxes, wiring and accessories as shown on the drawings and as required for a complete and operable system.
11. System programming as required to incorporate changes to the system's sequence of operation.

EDIT 1.2.D AND E TO MAKE THEM PROJECT-SPECIFIC.

D. Provide the following additional work where shown on the drawings:

1. Remote annunciators.
2. Control outputs to smoke control system devices.
3. Status lights indicating the current status of smoke control system devices.
4. Auxiliary controls to manually override the control outputs to smoke control system devices.
5. Control outputs to interrupt power to electrically operated access control door hardware devices.
6. Non-battery backed power to door hold-open devices.
7. Emergency voice/alarm communications.
8. Remote microphone cabinets.
9. Fire Department telephone communications.

E. The following work is not included unless shown otherwise:

1. Smoke and heat detectors that initiate an elevator recall.
2. Smoke and heat detectors that actuate a fire suppression system.
3. Electrically operated door hardware devices.
4. Power to electrically operated door hardware devices.
5. Door hold-open devices.

1.3 RELATED SECTIONS

A. The drawings and the general provisions of the contract, including the current edition of the University of Michigan Standard General Conditions, apply to this section.

B. The applicable requirements of the other Division 26 specification sections, including the following, apply to this section.

1. Section 260500, "Basic Electrical Materials and Methods".
2. Section 260513, "Cables and Wires".
3. Section 262700, "Service and Secondary Distribution".
4. Section 260526, "Grounding".
5. Section 260800, "Electrical Acceptance Tests".

1.4 REFERENCES

A. Comply with the current versions of the following codes and standards as applicable:

1. ANSI/IEEE C2, "National Electrical Safety Code".

2. MBC, "Michigan Building Code".
3. MEC, "Michigan Electrical Code".
4. MMC, "Michigan Mechanical Code".
5. "Michigan Rehabilitation Code".
6. "Michigan Residential Code".
7. NFPA 13, "Standard for the Installation of Sprinkler Systems".
8. NFPA 20, "Standard for the Installation of Centrifugal Fire Pumps".
9. NFPA 72, "National Fire Alarm Code", except as follows:
   a. Smoke detectors that initiate an elevator recall shall not be connected to the fire alarm system.
   b. Smoke and heat detectors shall not be required above suspended ceilings.
   c. Horns or speakers shall not be installed in elevator machine rooms. Horns shall not be installed in elevator cars.
   d. Fire alarm system shall not shut down power to the elevators.
   e. Optional smoke detectors in rooms with beam pockets should be spaced as shown on the plan drawings.
10. NFPA 90A, "Standard for the Installation of Air Conditioning and Ventilating Systems".
11. UL 217, "Single and Multiple Station Smoke Detectors".
12. UL 268, "Smoke Detectors for Fire Protective Signaling Systems".
13. UL 268A, "Smoke Detectors for Duct Applications".
14. UL 464, "Audible Signal Appliances".
15. UL 521, "Heat Detectors for Fire Protective Signaling Systems".
16. UL 864, "Control Units for Fire Protective Signaling Systems"
17. UL 1480, "Speakers for Fire Protective Signaling Systems".
18. UL 1971, "Signaling Devices for the Hearing Impaired".

B. For classroom, in-patient medical and Housing projects, comply with the applicable sections of NFPA 101, "Life Safety Code" as adopted and amended by the Michigan Bureau of Fire Services.

C. For systems that provide partial evacuation or relocation of occupants rather than full evacuation, comply with the NFPA 72 requirements related to survivability from attack by fire.

1. Designate each notification appliance circuit to serve no more than one notification zone.
2. Protect power supply and notification appliance circuits from fire until they enter the notification zone they serve.
3. Monitor the integrity of audible and visual notification appliance power supplies, audio generators, amplifiers and circuits.
4. Monitor the integrity of Fire Department telephone communications circuits.

1.5 SYSTEM DESIGN REQUIREMENTS

A. The system shall be power limited.

B. Provide a fire alarm control panel with the following:

1. Digital display.

2. Multiple pushbutton keypad.
3. LED status indicating lights.
4. Audible status signals.
5. Output relays.
6. Battery charger and batteries.
7. RS-232 communications card.

C. Provide Class B, Style 3, signaling line circuits.

1. Provide sufficient spare capacity on each signaling line circuit for an additional 25 percent of initiating and control devices.

D. Provide Class B, Style Y, notification appliance circuits.

1. Size the control panel power supplies, amplifiers and batteries for 25 percent spare capacity calculated with 40 ma horn loads, 1 watt speaker loads and 150 ma strobe light loads.
2. Provide sufficient spare capacity on each notification appliance circuit for an additional 25 percent of notification appliances.

E. The system shall supervise the following circuits and components:

1. Initiating device circuits.
2. Signaling line circuits.
3. Notification appliance circuits.
4. Addressable initiating and control devices.
5. Control output wiring.
6. Auxiliary control switches.
7. System node panels, NAC panels, remote annunciators and remote microphone panels.
8. Primary power supply.
9. Secondary power supply.

F. The system shall be capable of being programmed by the Owner on site to accommodate expansion or sequence of operation changes.

G. Provide 120 volts AC primary power to the system from a dedicated emergency power branch circuit.

H. Provide a control panel battery charger capable of fully charging a 200 amp-hour battery within 24 hours.

I. Provide sufficient secondary power battery capacity to operate the entire system (except the door hold-open devices) upon the loss of primary power for a period of 24 hours in a normal supervisory mode followed by 5 minutes of evacuation alarm operation.

1. When emergency voice/alarm communications is provided, provide sufficient battery capacity for 24 hours of operation in a normal supervisory mode followed by 15 minutes of voice/alarm operation.
2. The system shall automatically transfer to and from the secondary power batteries upon an interruption of primary power without initiating a nuisance alarm.
3. The system shall delay initiating a trouble condition for two seconds upon a transfer to or from primary power to avoid nuisance trouble conditions during emergency generator testing.

J. Provide smoke and heat detectors as required by code and as shown, including the following.

1. Provide smoke detectors in each elevator lobby and in each elevator machine room to duplicate the elevator recall detectors provided as part of the elevator system. Do not provide smoke or heat detectors in elevator shafts.
2. Provide two heat detectors, one in front and one behind, each unit substation transformer.
3. Provide smoke detectors in each mechanical, electrical, telecommunications, trash collection and recycling room.
4. Provide smoke detectors in residence hall corridors, each sleeping room, and immediately outside each sleeping room located within a suite or apartment.
5. Provide duct smoke detectors where required by code. When not in plain view or more than 10 feet above the floor, provide duct detector remote alarm indicators and test switches mounted in plain view at 48 inches above the floor.

K. Provide sufficient audible notification appliances to achieve a sound level of 15 dBA above ambient sound level, but not less than 60 dBA nor more than 110 dBA. The sound level in mechanical rooms shall be not less than 90 dBA, and in sleeping rooms shall be not less than 75 dBA measured at pillow level. The sound shall be a temporal code three slow whoop or pulsed evacuation signal.

1. In rodent rooms, the sound shall be a slow whoop or warble with a peak frequency below 500 Hz.
2. Do not provide horns or speakers in exit stair enclosures.
3. Do not provide horns or speakers in elevator machine rooms or in elevator cars.
4. Provide a speaker in each sleeping room and a sounder base in each sleeping room smoke detector. The speaker shall provide the general alarm and the sounder base shall alarm upon smoke in the room.

L. Provide visual notification appliances in accordance with the intensity and spacing requirements of NFPA 72.

1. Provide strobes in all public areas including multi-person offices, but not in exit stair enclosures and animal rooms.
2. Combine horns or speakers with strobes when both are required at the same location.
3. Synchronize strobes when more than two appliances are in any point of view and are less than 55 feet apart.
4. Provide strobes in elevator machine rooms.
5. Provide strobes in accessible sleeping rooms and in living spaces of accessible suites or apartments.
6. Provide strobes in mechanical rooms and other areas that have an average ambient noise level exceeding 60 dBA.

DELETE THE FOLLOWING PARAGRAPH IF NOT APPLICABLE.

M. Provide a waterproof horn/strobe or speaker/strobe with waterproof back box on the exterior of the building between 8 and 12 feet above the fire department connection. Audible sound shall be 90 dBA minimum at 10' and visual intensity shall be 110 candela. Program this device to alarm upon sprinkler system water flow only, and to cease operation upon termination of water flow.

N. Provide individually addressable monitor modules to monitor non-addressable initiating devices and status contacts of other systems.

1. Monitor modules shall use Class B, Style B initiating device circuits to monitor the initiating devices and status contacts.
2. When interconnecting with an existing fire alarm system control panel, provide monitor modules as required so new and existing control panels function as a single system.

O. Provide panel auxiliary relay contacts and individually addressable control module contacts to interface with control circuits of other systems and equipment.

1. Provide normally closed duct smoke detector contacts to shut down ventilation systems.
2. Provide normally open auxiliary relay or control module contacts to start smoke control systems.
3. Provide normally closed auxiliary relay or control module contacts to release electrically held door locks and door hold-opens, and to disable electrically operated door proximity sensors.
4. When interconnecting with an existing fire alarm system control panel, provide control modules as required so new and existing control panels function as a single system.

P. Provide control panel On/Off/Auto switches with "On" and "Off" or "Open" and "Closed" LED indicators for overriding the normally open contacts that start smoke control systems.

1. In the Auto position, the contacts shall operate in accordance with the fire alarm system program. In the Off position, the contacts shall remain open. In the On position, the contacts shall close to test the controlled equipment.
2. The LED indicators shall indicate the status of the controlled equipment in accordance with the MMC.
3. Turning any switch out of the Auto position shall initiate a system trouble condition.

Q. Assign each initiating device a unique device address.

R. Develop a custom location label for each initiating device that describes the type, floor, room number and exact location of the device.

1. If the device is in a corridor or similar large space, state device is by Room (NAME/NUMBER).
2. If room numbers are not available, provide compass directions and references to unique building features.

S. Provide transient voltage surge suppression for the system.

1.6 SYSTEM PERFORMANCE REQUIREMENTS

A. Under normal conditions, the control panel digital display shall display a "SYSTEM NORMAL" message and the current time and date.

B. Should an abnormal condition be detected, the appropriate alarm, supervisory, or trouble panel LED shall flash and the appropriate panel audible signal shall sound.

C. The appropriate panel alarm, supervisory, trouble or supervisory maintenance alert outputs including addresses and locations of initiating devices shall be sent via fiber-optic cable (by others) for viewing at the University Hospital Facility Command Center (UHFCC).

D. The fire alarm control panel shall manage all input and output signals through software programming and hardware configuration. In addition to managing and supervising the fire alarm devices, the control panel shall be configured to trigger an alarm when the fire pump runs.

E. The panel shall display the following information relative to the abnormal condition:

1. Custom location label (40 characters minimum).
2. Type of initiating device.
3. Type of abnormal condition (alarm, supervisory or trouble).

F. If the abnormal condition is an alarm, the following actions shall occur:

1. Audible notification appliances shall sound throughout the building.
2. Visible notification appliances shall flash throughout the building.
3. Control outputs to mechanical systems shall perform their programmed functions.
4. Control outputs shall interrupt power to electrically operated door hardware devices.
5. Power to door hold-open devices shall de-energize.

G. Pressing the appropriate Acknowledge pushbutton shall acknowledge the alarm, supervisory or trouble condition unless the system is in the silence inhibit mode. Once acknowledged, the appropriate LED shall latch on and the panel audible signal shall be silenced.

H. If the abnormal condition is an alarm, pressing the Silence pushbutton shall silence the audible notification appliances and stop the visual notification appliances from flashing.

I. In addition to the Acknowledge and Silence pushbuttons available on the fire alarm control panel, the fire alarm system head end equipment in the UHFCC shall be capable of acknowledging and silencing the system remotely.

J. Upon a subsequent abnormal condition from another device, the appropriate panel LED shall flash, the panel audible signal shall again pulse and the panel display shall show the new abnormal condition.

K. After all of the points have been acknowledged and silenced, the LED's shall glow steady and the panel audible signals shall be silenced. The total number of alarms, supervisory, and trouble conditions shall be displayed along with a prompt to review each list chronologically. The end of the list shall be indicated.

L. Pressing the System Reset pushbutton shall return the system to its normal state if the abnormal conditions have been remedied.

1. The display shall step the user through the reset process with simple English language messages. Messages including "IN PROCESS", "RESET COMPLETED", and "SYSTEM NORMAL" shall provide operator assurance of the sequential steps as they occur.
2. The ventilation system motors shall restart sequentially.
3. The outputs to control circuits of other systems and equipment shall return to normal.
4. When interconnecting with an existing fire alarm system control panel, resetting shall not require the simultaneous operation of reset pushbuttons or switches on multiple control panels, or the disconnection of wiring.

M. Should an abnormal condition continue to exist, the system shall remain in an abnormal state. The system control relays shall not reset. The panel LED's shall remain on. The display shall indicate the total number of alarm, supervisory and trouble conditions present in the system along with a prompting to review the points. These points shall not require acknowledgment if they were previously acknowledged.

N. Should a trouble condition continue to exist, the trouble audible signal shall resound at preprogrammed time intervals to act as a reminder that the fire alarm system is not 100 percent operational. Both the time interval and the trouble audible signal shall be programmable to suit the Owner's application.

O. Should the Alarm Silence Inhibit function be active, the System Reset pushbutton shall be ignored and a "RESET INHIBITED" message shall be displayed for a short time to indicate that action was not taken. For operator assurance, a "RESET NO LONGER INHIBITED" message shall be displayed when the inhibit function times out.

1.7 ITEMIZED QUOTATION

A. Submit with your bid an itemized cost breakdown listing all major component costs, labor costs (including subcontractor labor and material costs), and engineering costs, for base bid and for each alternate, for the entire fire alarm system scope of work. When requested, provide an itemized breakdown to the Owner post-bid for review and approval.

1.8 SUBMITTALS

A. Submit for approval copies of the following shop drawings and product literature. Shop drawings shall contain title blocks identifying the project name and number. Submittals shall be marked to indicate the specific models, sizes, types and options being provided. Submittals not so marked and incomplete submittals will be rejected.

1. Plan drawings showing the locations (with room numbers) of the system components, including any adjustments in the quantities and locations of initiating devices and notification appliances to meet code requirements.
2. Riser diagram showing system components, interconnecting wiring and connections to other building systems and equipment.

3. Wiring diagrams showing manufacturer and field connections at component terminals, complete with conductor color codes and wire numbers.
4. System configuration list showing inputs, outputs, device addresses and custom location labels, device configurations and program logic.
5. Bill of materials.
6. Catalog pages showing system components.
7. System battery sizing calculations.
8. Power supply, amplifier and circuit sizing calculations.
9. Door hold-open power supply sizing calculations.

ON FIRE ALARM RENOVATION PROJECTS, DELETE ALL OF 1.9.

1.9 EXTRA MATERIALS

A. Provide to the Owner the following extra materials matching the products installed, packaged in protective coverings for storage, and identified with labels clearly describing the contents. Provide 1 percent of the installed amount of each with a minimum of one of each.

1. Fuses: Each size and type used in the system.
2. Manual Pull Stations.
3. Detector Bases.
4. Detector Heads: Each type used in the system.
5. Addressable Monitor and Control Modules: Each type used in the system.
6. Notification Appliances: Each size and type used in the system.
7. Output Relays.

B. Provide one data cable for connecting a lap top computer to the fire alarm control panel's RS-232 communications card so that the Owner can perform panel programming.

1.10 RECORD DOCUMENTS

A. Submit four copies of record drawings showing the locations of fire alarm devices and appliances, the locations of end-of-line resistors and junction boxes, the addresses of addressable devices, the tap settings of audible notification appliances, the intensity ratings of visual notification appliances, the sizes of conduits and conductors, circuit numbers, and deviations from the design.

B. Submit four printed copies of the final system configuration list showing inputs, outputs, addresses, custom location labels, device configurations and program logic.

C. Submit electronic, Windows based files with the following final system software:

1. The master program generic to the model of system being provided.
2. The building specific program containing the unique information for the system being provided.
3. A software license and the system passwords required by the Owner to perform programming changes.

1.11 OPERATIONS AND MAINTENANCE MANUALS

A. Submit for approval four copies of operations and maintenance manuals for the specified system and equipment prior to startup. The manuals shall be the same manuals used by the Manufacturer's field service technicians. The manuals shall be marked to indicate the specific models, sizes, types and options that were provided. Manuals not so marked will be rejected.

1.12 QUALITY ASSURANCE

A. The fire alarm system shall be the standard product of a single fire alarm system manufacturer who has been producing this type of equipment for at least 10 years, and has a fully equipped service organization within 150 miles of the Owner. Each component shall display the manufacturer's name.

B. Each fire alarm system component shall be listed under the appropriate standard of Underwriters Laboratories and shall bear a UL label.

C. The fire alarm system shall be UL labeled as a system and approved by FM Global.

DELETE THE FOLLOWING PARAGRAPH IF NOT APPLICABLE.

D. For classroom, in-patient medical and Housing projects, the fire alarm system shall also be approved by the State of Michigan Bureau of Fire Services.

1. Submit shop drawings to the Michigan Bureau of Fire Services for approval.
2. Arrange for a Michigan Bureau of Fire Services Inspector to inspect the system installation and testing.
3. Submit to the Owner a copy of the FS-12A Form submitted to the Michigan Bureau of Fire Services.

E. The fire alarm system shall comply with the requirements of the National Fire Alarm Code, the Owner’s Inspection Authorities and with the Manufacturer's instructions.

1.13 WARRANTY

A. Provide a complete parts and labor warranty for twelve months from the date of final acceptance of the system by the Owner.

B. Provide a telephone response to Owner’s questions within 4 hours and on-site assistance within 24 hours.

C. Permit Owner’s Fire Alarm Technicians to perform temporary bypasses and emergency repairs on the system without voiding the warranty.

PART 2 - PRODUCTS

2.1 MANUFACTURERS

A. Acceptable Manufacturers and Models:

1. EST Model EST-3 represented by Riverside Integrated Systems.
2. Honeywell Model XLS3000.
3. SimplexGrinnell Model 4100 Series.

2.2 SYSTEM COMMUNICATIONS

A. The fire alarm control panel shall communicate with each addressable initiating and control device individually via shielded twisted pair signaling line circuits. EST SIGA-Loop, Honeywell Eclipse or FlashScan, or SimplexGrinnell MAPNET II or IDNET.

B. Each signaling line circuit shall be capable of accessing up to 127/250 addressable devices.

C. Each signaling line circuit shall allow up to 10,000 feet of wire length to the furthest addressable device.

D. Communications shall use a broadcast polling protocol to allow t-tapping of the circuit except where Class A wiring is required. T-taps shall be limited to 64 per loop.

E. Communications shall be completely digital and shall include parity data bit error checking routines for address codes and check sum routines for the data transmission protocol.

F. Each device shall be uniquely identified by a device address.

G. There shall be no limit to the number of initiating devices which may be activated simultaneously.

H. Each device shall be individually annunciated at the panel. Annunciation shall include the following conditions for each device.

I. Alarm, supervisory or trouble condition.

1. Open, short or ground.
2. Device failure or incorrect device installed.

2.3 FIRE ALARM CONTROL PANEL

A. The fire alarm control panel shall be modular with solid state, microprocessor based electronics. EST 3, Honeywell XLS3000, or SimplexGrinnell 4100 Series.

B. The panel shall display only those primary controls and displays essential to operation during a fire alarm condition.

C. The panel shall include a LCD digital display, with a minimum of 80 characters.

1. The display shall be backlit for enhanced readability. It shall not be lit during an AC power failure unless an alarm condition occurs or there is keypad activity.

2. The display shall support both upper and lower case letters. Lower case letters shall be used for soft key titles and for prompting the user. Uppercase letters shall be used for system status information. A cursor shall be visible when entering information.

D. A panel audible signal shall sound during alarm, supervisory or trouble conditions. This audible signal shall sound differently during each condition to distinguish one condition from another. The audible signal shall also sound differently during each key press to provide audible feedback (chirp) indicating that the key has been pressed properly.

E. The system program shall be stored in a non-volatile flash EPROM memory within the panel. Loss of primary and secondary power shall not erase the program stored in memory.

1. The program shall be capable of selective input/output control functions based upon AND'ing, OR'ing, NOT'ing, timing and special coded operations.
2. The program shall enable initiating devices to be individually configured on site to provide either alarm and trouble, supervisory and trouble, alarm only, supervisory only, trouble only, current limited alarm, no alarm, normally closed device monitoring, a non-latching circuit or an alarm verification circuit.
3. The program shall enable initiating devices to be disabled or enabled individually.

F. The panel or the field devices shall determine the alarm decision for each detector by comparing the detector value to stored values.

1. The panel shall automatically maintain a constant smoke obscuration sensitivity in percent of smoke obscuration format for each detector.
2. The panel shall maintain a moving average of each smoke detector's smoke chamber value to automatically compensate for dust and dirty conditions that could affect detection operation.
3. The smoke obscuration sensitivity shall be adjustable to within 0.3 percent of either limit of the UL window (0.5 percent to 4.0 percent) to compensate for any environment.
4. When a detector's average value reaches a predetermined value, a "MAINTENANCE ALERT" condition shall be audibly and visually indicated at the panel. The LED on the detector base shall glow steady giving a visible indication at the detector location. If a dirty detector is left unattended and its average value increases to a second predetermined value, a "TROUBLE" condition shall be indicated at the panel. To prevent nuisance alarms, these dirty conditions shall in no way decrease the amount of smoke obscuration necessary for system activation.
5. The panel shall continuously perform an automatic self-test routine on each detector which shall functionally check detector electronics and ensure the accuracy of the obscuration values being transmitted to the panel. Any detector that fails this test shall indicate a "SELF TEST ABNORMAL" or "TROUBLE" condition at the panel.

6. Each detector shall be scanned by the panel for its type identification to prevent inadvertent substitution of another detector type. The panel shall operate with the installed device but shall initiate a "WRONG DEVICE" or "TROUBLE" condition until the proper type is installed or the programmed detector type is changed.
7. An operator at the panel, having a proper access level, shall have the ability to manually access the following information for each detector.
    a. Device type.
    b. Device status.
    c. Present average value.
    d. Peak detection values.
    e. Present sensitivity selected.
    f. Detector range (normal, dirty, etc.).
8. An operator at the panel, having a proper access level, shall have the ability to perform the following for each detector:
    a. Enable or disable the point.
    b. Clear peak detection values.
    c. Clear verification tally.
    d. Control a detector's relay driver output.
9. The panel shall be programmable to automatically change the sensitivity settings of each detector based on time-of-day and day-of-week (for example, to be more sensitive during unoccupied periods and less sensitive during occupied periods). There shall be seven sensitivity settings available for each detector.
10. The panel shall be programmable for a pre-alarm or two-stage function. This function allows an indication to occur when, for example, a detector with a 3 percent set point reaches a threshold of 1.5 percent smoke obscuration.
11. Smoke detectors shall be provided with the ability for alarm verification. When in alarm verification mode, only a verified alarm shall initiate the alarm sequence operation.
    a. The activation of a smoke detector shall initiate an alarm verification operation whereby the panel resets the activated detector and waits for a second alarm activation. If, within an adjustable time delay, a second alarm is reported from the same or any other smoke detector, the system shall process the alarm. If no second alarm occurs within the time delay, the system shall resume normal operation.
    b. The alarm verification shall operate only on smoke detector alarms. Other activated initiating devices shall be processed immediately. The alarm verification operation shall be selectable by device.
    c. The panel shall have the capability to display the number of times a device has gone into a verification mode.
    d. Detectors in alarm verification mode shall have the ability of being divided into different groups whereby any two activations from a group shall cause the panel to follow its programmed alarm sequence.

G. The panel shall have four pass code controlled access levels. Pass codes shall be entered using the panel key pad.

1. To maintain security when entering a pass code, the digits entered shall not be displayed.

2. When a correct pass code is entered, an "ACCESS GRANTED" message shall be displayed. The access level shall be in effect until the keypad is inactive for 10 minutes or the operator logs out.
3. Should an invalid code be entered, the operator shall be notified with a message and shall be allowed up to two more chances to enter a valid code. After three unsuccessful tries, an "ACCESS DENIED" message shall be displayed.
4. Access to a level shall only allow the operator to perform actions within that level and actions of lower levels, not actions of higher levels.
5. Access levels shall be associated with the following functions:
   a. Alarm silence.
   b. System reset.
   c. Set time and date.
   d. On/Off/Auto control selection.
   e. Manual control.
   f. Disable and enable circuits and devices.
   g. Clear historical logs.
   h. Walk test.
   i. Change alarm verification.
   j. Change detector sensitivity.
   k. Function keys.
6. An access level shall also be associated with acknowledge keys. If the operator presses an Acknowledge key with insufficient access, an error message shall be displayed. The points on the log shall scroll with each key press, but the points shall not be acknowledged.

H. The panel shall have the ability to store a minimum of 300 events in an alarm log plus a minimum of 300 events in a separate trouble log. These events shall be stored in a battery protected random access memory. Real time and date shall accompany history event recordings.

I. The panel shall supervise subordinate module LED's for burnout or disarrangement. Should a problem occur, the panel shall display the module and LED location numbers to facilitate location of that LED.

J. The panel shall have function keys programmed as follows for disabling and enabling circuits or groups of devices for maintenance or testing purposes. While circuits or devices are disabled, the panel shall indicate "TROUBLE".

DELETE THE FUNCTION KEYS THAT DON'T APPLY TO THIS PROJECT. DO NOT RENUMBER THE REMAINING FUNCTION KEYS.

1. F1: Disable smoke detectors by floor.
2. F2: Disable duct smoke detectors.
3. F3: Disable sprinkler system flow switches.
4. F4: Disable horns/strobes or speakers/strobes by floor.
5. F5: Disable beam detectors.
6. F6: Disable smoke detector sounder bases.
7. F7: Disable hood suppression systems.

K. The system shall be capable of being walk tested by one person.

1. The activation of an initiating device under test shall be silently logged as an alarm or supervisory condition in the historical log. The panel shall automatically reset itself after logging the abnormal condition.
2. The momentary disconnection of an initiating device or notification appliance shall be silently logged as a trouble condition in the historical log. The panel shall automatically reset itself after logging the trouble condition.
3. The walk test sequence shall have the ability to activate the notification appliances for a maximum of 2 seconds upon the activation of an initiating device under test. If this option is selected, any momentary opening of the initiating device circuit or a notification appliance circuit shall cause the notification appliances to sound for 4 seconds to indicate the trouble condition.
4. Should the walk test mode be on for an inappropriate amount of time, the panel shall automatically revert to normal mode.
5. Should an abnormal condition occur from an active point not in walk test mode, the system shall perform its standard programmed alarm, supervisory or trouble sequences.

L. The panel enclosure shall be equipped with locks and transparent door panels providing freedom from tampering yet allowing full view of the various lights and controls.

2.4 NODE AND NAC PANELS

A. Node and NAC panels shall be modular with solid state, microprocessor based electronics, operator interfaces, power supplies, audio generators, amplifiers, battery chargers and batteries as required. All components shall be supervised. EST 3, Honeywell XLS3000, or SimplexGrinnell V4100.

2.5 BATTERIES

A. Batteries shall be lead calcium and supervised so that a failure produces a "TROUBLE" signal.

2.6 REMOTE ANNUNCIATOR

A. The remote annunciator shall duplicate the backlit LCD display; the alarm acknowledge, supervisory acknowledge, trouble acknowledge, alarm silence, and system reset pushbuttons; the alarm, supervisory, and trouble audible signals; the alarm, supervisory, trouble, and power "on" LED's; and the programmable function keys of the fire alarm control panel. A key "enable" switch or door lock, keyed to match the fire alarm control panel door lock, shall permit activating or deactivating the controls. EST 3-ANN, Honeywell XLS-NCA, or SimplexGrinnell 4603-9101.

B. A remote microphone shall be included when the fire alarm system includes emergency voice/alarm communications, along with the same pushbuttons as the fire alarm control panel for selecting prerecorded voice messages, and the same controls to choose total building or selected areas communications.

2.7 ADDRESSABLE SPOT DETECTOR BASES

A. Spot detector mounting bases shall be individually addressable, suitable for two wire operation, with a twist-lock head locking feature a DIP switch or electronic addressing means, and an LED that provides power "on", alarm and trouble indications. The bases shall be listed for ceiling and wall mounting. Removal of the detector head shall cause a trouble condition at the panel. EST SIGA-SB, Honeywell 14507371-001, or SimplexGrinnell 4098-9792.

B. Where shown, the bases shall include an auxiliary relay that is controlled from the panel. EST SIGA-RB, Honeywell B244RB, or SimplexGrinnell 4098-9791 base with 2098-9737 relay.

C. In sleeping rooms, the base shall include a piezoelectric sounder that is controlled from the panel. EST SIGA-AB4, Honeywell B501BHT, or SimplexGrinnell 4098-9794.

D. When bases are not in plain view, bases shall be connected to remote alarm indicators mounted in plain view at 48 inches above the floor.

2.8 MULTISENSOR SMOKE DETECTOR HEADS

A. Multi-sensor type smoke detector heads shall include sampling and reference ionization chambers with a single radioactive source, a photoelectric sensor and a programmable heat detector. The detectors shall support at least four levels of sensitivity selectable at the panel and 360 degree smoke entry. EST SIGA-IPHS, Honeywell TC806B1084, or SimplexGrinnell 4098-9754.

2.9 PHOTOELECTRIC SMOKE DETECTOR HEADS

A. Photoelectric type smoke detector heads shall include a pulsed LED light source and a silicon photodiode receiver, at least seven levels of sensitivity selectable at the panel, an integral insect screen and 360 degree smoke entry. This type of detector shall be installed in all duct detectors. EST SIGA-PS or SIGA-SD, Honeywell TC806B1076, or SimplexGrinnell 4098-9714.

2.10 HEAT DETECTOR HEADS

A. Heat detector heads shall include combination rate-of-rise and rate compensated fixed temperature sensing, two levels of rate-of-rise sensitivity selectable at the panel, and an independent 135 degrees F fixed temperature set point. Heat detector heads shall be self-restoring. EST SIGA-HRS, Honeywell TC808B1066, or SimplexGrinnell 4098-9733.

B. Heat detector heads for steam tunnels, cage wash areas and dish machine areas shall have a 135 degrees F fixed temperature set point and shall be self-restoring. EST SIGA-HFS, Honeywell TC808B1041 or SimplexGrinnell 4098-9733.

2.11 DUCT DETECTORS

A. Duct detectors shall be individually addressable and consist of a housing, sampling tubes, a baffle and a detachable detector head. Duct detectors shall include an alarm LED, a local test switch, and an auxiliary SPDT relay for ventilation system control. Duct detectors shall be resettable by actuating the panel reset pushbutton. The sampling tubes shall be capable of being cleaned through the housing cover. EST SIGA-SD DH100ACLP, Honeywell TC806D1056, SimplexGrinnell 4098-9756, or System Sensor BK-DH100ACLP.

B. The detector heads shall be photoelectric as specified above, but shall be capable of accepting ionization detector heads.

C. When not in plain view, duct detectors shall include remote alarm indicators and test switches mounted in plain view at 48 inches above the floor.

2.12 BEAM DETECTORS

A. Photoelectric projected beam detectors shall be individually addressable and consist of separate transmitter and receiver units capable of long range coverage of up to 350 feet. Beam detectors shall include alarm and trouble dry auxiliary contacts, and normal, alarm and trouble LED status indicators. Beam detectors shall include internal bore sights, automatic calibration, six sensitivity settings, automatic compensation for temperature and lens contamination, and a trouble indication upon either a total obscuration or an obscuration of 50 percent of the alarm set point. Beam detectors shall be suitable for four wire operation utilizing 24 volt DC power from the panel, and resettable by actuating the panel reset pushbutton. EST EC50R, Honeywell TC847A1004, or SimplexGrinnell Fire Ray Series.

2.13 MANUAL PULL STATIONS

A. Manual pull stations shall be individually addressable, suitable for two wire operation, with a high impact red Lexan body and raised white lettering. Stations shall include an ADA compliant single action operating mechanism with a mechanical latch to hold an operated station open until reset. EST SIGA-270, Honeywell S464G1007, or SimplexGrinnell 4099-9001.

B. Reset shall be accomplished through use of a key common to the panel or a small flat-blade screwdriver. Stations which use allen wrenches or special tools to reset are not acceptable. The point of reset shall be front accessible so stations with tamper-resistant covers can be reset easily.

2.14 MONITOR MODULES

A. Monitor modules for individual two wire contact monitoring shall be individually addressable, suitable for two wire operation, with a DIP switch or electronic addressing means, and a programmable latch feature for monitoring momentary contacts. Monitor modules shall monitor a single normally open dry contact using a Class B, Style B, initiating device circuit. EST SIGA-CT1 or SIGA-CT2, Honeywell TC809A1059, or SimplexGrinnell 4090-9001.

B. Monitor modules for zone or four wire device monitoring shall be individually addressable, suitable for four wire operation utilizing 24 volt DC power from the panel, and with a DIP switch or electronic addressing means. Zone monitor modules shall monitor multiple normally open dry contacts using a Class B, Style B, two wire initiating device circuit, or monitor a four wire device using a Class B, Style D, four wire initiating device circuit. EST SIGA-UM, Honeywell TC809, or SimplexGrinnell 2190-9156 or 4090-9101.

2.15 CONTROL MODULES

A. Control modules shall be individually addressable, with a DIP switch or electronic addressing means. Control modules shall provide a Form C contact rated .5 amps at 120 volts AC or 2 amps at 28 volts DC resistive that are controlled by the panel. EST SIGA-CR, Honeywell TC801N1013, or SimplexGrinnell 4090-9002.

2.16 HORNS

A. Horns shall be electronic, rated 24 volts DC, with a piezoelectric driver set to produce a slow whoop sound level of 101 dBA at 10 feet, with a red, semi-flush body capable of wall or ceiling mounting. EST 757-1A or Genesis Series, Honeywell HR, or SimplexGrinnell 4901-9820.

DELETE THE FOLLOWING PARAGRAPH IF NOT APPLICABLE.

B. Horns in rodent rooms shall be set to generate a slow whoop or warble sound with a peak frequency below 500 Hz. Horns shall be of heavy-duty industrial construction and shall be UL listed for indoor and outdoor applications. EST Model 5530MD-24AW.

2.17 SPEAKERS

A. Speakers shall be rated 125 to 12,000 Hertz, include four taps rated at from 1/4 to 2 watts, produce a sound level of 82 dBA at 10 feet when set at the 1/2 watt tap, and with a semi-flush body capable of wall or ceiling mounting. EST 757-1A-S25W or Genesis Series, Honeywell SP, or SimplexGrinnell 4902-9703 (wall mount) or 4902-9721 (ceiling mount).

B. Speakers for locations with high ambient noise may be high efficiency horns rated 500 to 6,000 Hertz minimum, 10 watts minimum, include four or more taps, produce a sound level of 106 dBA minimum at 1 meter when set at the 1 watt tap, and be capable of wall or ceiling mounting. EST/GE HPSA15, Honeywell/GE HPSA15, or SimplexGrinnell EA0012 ABS.

2.18 STROBES

A. Strobes shall be rated 15, 30, 60, 75, 110 or 177 candela as shown for proper illuminance, with a 1 Hertz flash rate, Xenon flash tube, white body, clear Lexan lens with red "FIRE" or international fire symbol lettering, capable of being synchronized, and capable of wall or ceiling mounting. EST Genesis Series, Honeywell SR/SCR, or SimplexGrinnell 4906 Series.

2.19 COMBINATION HORN/STROBES AND SPEAKER/STROBES

A. Combination horn/strobes and speaker/strobes shall consist of the horns, speakers and strobes specified above, but combined on a single mounting plate. Combination units used outdoors and in wet areas shall be waterproof and mounted to waterproof back boxes. EST Genesis Series, Honeywell SpectrAlert Advance Series, or SimplexGrinnell 4906 Series.

2.20 DOOR HOLD-OPEN POWER SUPPLY

A. The door hold-open power supply shall produce 24 volts DC of sufficient amperage to provide 0.4 amps of current to every door hold-open device being controlled. The power supply shall be supervised and capable of withstanding the inrush current that will occur when the door hold-open devices are energized.

B. The output of the power supply shall be distributed by individually fused circuits. Fuse each circuit at 5 amps.

C. The power supply shall release the held open doors upon a fire alarm or an AC power failure.

2.21 EMERGENCY VOICE/ALARM COMMUNICATIONS

A. Emergency voice/alarm communications shall include audio control modules for alarm tone and voice message generation, a minimum of six pushbuttons for selecting pre-recorded voice messages, controls to choose total building or selected areas communications, audio amplifiers, a local microphone, and remote microphones in remote annunciators and cabinets. All of the components except for the remote microphones shall be located in or adjacent to the fire alarm control panel.

B. The audio control module default mode shall provide for automatic total building fire alarm evacuation. The audible evacuation alarm signal shall consist of three slow whoop alarm tones followed by a fire alarm voice evacuation message. At the end of each voice evacuation message, the alarm tones shall resume. The alarm tones and voice evacuation message shall sound alternately until the alarm silence pushbutton at the fire alarm control panel or remote annunciator has been pressed. All audio signals and messages shall be digitally transmitted between nodes.

C. The audio control modules shall provide for manual total building or selected area pre-recorded voice message generation by pushing a pre-recorded voice message pushbutton. One pushbutton shall initiate the fire alarm voice evacuation message, and the other pushbuttons shall initiate Owner-defined pre-recorded voice messages.

D. The audio control modules shall provide for manual total building or selected areas communications. Upon keying of the microphone, a three second continuous alert tone shall sound over the speakers indicating a voice message will occur.

E. The alarm tones shall be digitally generated by programmable software so that changes can be made without component rewiring. The voice messages shall be stored digitally in non-volatile EPROM memory.

DELETE THE FOLLOWING PARAGRAPH IF NOT APPLICABLE.

F. The alarm tone for rodent rooms only shall be produced by a separate audio control module and amplifier that generate a slow whoop or warble sound with a peak frequency below the hearing range of rodents (i.e. 500 Hz).

G. Audio amplifiers shall have a frequency response of 125 Hz to 12,000 Hz minimum.

H. Microphones shall be of a hand-held, push-to-talk, noise-canceling type with a frequency range of 200 Hz to 4000 Hz and a self-winding five foot coiled cable. An LED shall indicate the microphone push-to-talk pushbutton has been pressed and the speaker circuits are ready for transmission.

I. Remote microphones shall be enclosed in remote annunciator cabinets or wall-mounted cabinets as shown on the plan drawings, with the same pushbuttons for selecting pre-recorded voice messages, and lockable doors. Remote microphones shall duplicate the manual voice transmission capability of the local microphone at the fire alarm control panel. The fire alarm control panel microphone shall have priority over any remote microphones.

The remote microphone in a remote annunciator cabinet shall provide for total building or selected areas communications.
The remote microphone and cabinet at the fire alarm system head end equipment in the UHFCC shall provide for total building or selected areas communications.

J. Should a Fire Department telephone communication system be provided, the telephones system shall be capable of being patched to the emergency voice/alarm communications system. Manual operation shall be controlled at the fire command center.

2.22 FIRE DEPARTMENT TELEPHONE COMMUNICATIONS

A. Fire Department telephone communications shall consist of a minimum of eight dedicated communications circuits between a fire command center communications panel and remotely located emergency telephone jacks, a master telephone handset and five pluggable telephone handsets.

B. The communications panel shall include a master telephone controller for processing of two-way communications. This module shall include a circuit selector switch and "Call" and "Trouble" LED indicators for each circuit, an audible device for call and trouble signaling, a trouble silence switch with ring-back, and an LED trouble indicator. Circuit supervision modules shall be included to electrically supervise for shorts, opens, and grounds of circuit wiring.

C. The system shall be capable of handling single or simultaneous conversations with all telephones connected into the system. The circuits shall be so designed to prevent static, hum, or other interferences to clear, intelligible two-way conversations. The communications shall be transported digitally between devices.

D. The act of plugging a handset into an emergency telephone jack shall cause the appropriate circuit indicator LED to flash and a distinctive audible device to sound at the communications panel. The subsequent picking up of the master telephone and selection of the proper circuit shall silence the pulsing sound, cause the circuit indicator LED to latch on, and couple the remote telephone to the master telephone. Two or more telephones shall be capable of being connected into an active conversation at the discretion of the operator.

E. Attempting to use a subsequent telephone on the same circuit shall not cause the pulsing sound to activate if any two-way communications are already established. Any new circuits activated shall, however, cause their circuit indicator LED's to flash until acknowledged.

F. Unplugging the handsets in use and returning the related circuit selector switches to the normal position shall cause the restoration of normal supervisory functions. If any remote telephone remains plugged in, the appropriate circuit indicator LED shall flash and the pulsing sound shall resume at the communications panel.

G. The master telephone handset shall be recessed within a protective enclosure at the communications panel.

H. A single line circuit shall be provided to a jack in each stairwell at each floor, in each elevator car, in each elevator lobby, at each area of refuge, at the emergency generator(s) and at the fire pump location. Emergency telephone jacks shall be mounted on a stainless steel single gang plate engraved with the words "Fire Emergency Telephone".

I. Furnish an emergency telephone jack for installation in each elevator car. Wiring from the elevator controls to each elevator car and installation of the jacks will be provided by the elevator contractor.

J. Provide five pluggable emergency telephone handsets with self-winding five foot cords within a storage cabinet mounted at the fire command center. Key the cabinet to match the fire alarm control panel.

PART 3 - EXECUTION

3.1 SYSTEM INTERRUPTIONS

A. Coordinate with the UMHHC Facility Command Center (734-936-4000) before performing any work affecting an existing fire alarm system. Operating, programming, modifying or impairing an existing system without approval of the UMHHC Facility Command Center is strictly prohibited.

B. When renovating a fire alarm system, test the system to document its condition before changes are made. Maintain operation of fire alarm system devices outside of the work area.

C. When replacing a fire alarm system, maintain operation of the existing system until acceptance of the new system. If operation of the existing system cannot be maintained and the building is occupied, provide a 24 hour/day fire watch until the new system is accepted.

3.2 INSTALLATION

FOR NEW FIRE ALARM PROJECTS, SELECT ONE OF THE FOLLOWING THREE PARAGRAPHS (A, B OR C) AS DIRECTED BY THE PROJECT MANAGER. FOR FIRE ALARM RENOVATION PROJECTS, SELECT THE PARAGRAPH THAT MATCHES THE EXISTING INSTALLATION.

A. Provide wiring in conduit in accordance with Sections 260533 and 260513, and Manufacturer's instructions.

B. Provide wiring in conduit or provide fire alarm-rated MC cables in accordance with Sections 260533 and 260513, and Manufacturer's instructions.

C. Provide wiring and raceways as follows and in accordance with Sections 260533 and 260513 and Manufacturer's instructions.

1. Concealed in walls, exposed on walls up to 8' AFF, and above non-accessible ceilings - provide wiring in conduit.
2. Above accessible ceilings and above 8' AFF in unfinished spaces - provide open wiring in J-hooks. Provide conduit sleeves where open wiring penetrates walls and floors.

D. For systems that provide partial evacuation or relocation of occupants rather than full evacuation, protect power supply and notification appliance circuits from attack by fire until they enter the notification zone they serve. Provide 2-hour rated cable assemblies or protect circuits in 2-hour rated shafts, enclosures or sprinklered stairwells in accordance with Sections 260533 and 260513.

E. Circuits may be T-tapped only where shown on the manufacturer's wiring diagrams.

F. Provide waterproof back boxes with gaskets for devices and appliances installed outdoors or in wet or wash-down areas.

G. Paint fire alarm junction boxes, covers and fittings red or provide red conduit throughout, except fire alarm raceways exposed in finished areas may be painted to match wall color.

H. Modifications to fire alarm control panels, node panels, NAC panels and remote annunciator panels shall be made by a Manufacturer's Representative.

I. Final connections to the fire alarm system components and system programming shall be performed by Fire Alarm Technicians with NICET Level II or higher certification.

J. Label fire alarm panels with the room numbers, electrical panel numbers and circuit breaker numbers feeding them.

K. Paint the handles of circuit breakers feeding fire alarm panels red, and install handle locks.

L. Smoke and heat detectors shall not be installed until after construction clean-up is completed.

1. When renovating an existing system, remove and store existing detectors during construction activities.
2. Detectors installed prior to construction clean-up shall be cleaned by the manufacturer or replaced.

3.3 TESTING

A. Demonstrate complete operation of the fire alarm system in accordance with NFPA 72, NFPA 101 (classroom, in-patient medical and Housing projects only), the Michigan Building Code, and Manufacturer's instructions. Notify the Owner’s Representative 3 working days in advance of the test.

1. The test shall be witnessed by a U-M OSEH Fire Inspector, a U-M Electrical Inspector, and the U-M Fire Protection Shop.
2. Especially on fire alarm renovation projects, the U-M Fire Protection Shop may participate in or direct the testing activities.
3. On classroom, in-patient medical and housing projects, also include an Inspector from the Michigan Bureau of Fire Services.

B. Submit a signed and dated NFPA 72 test report to the Electrical Inspector prior to acceptance of the fire alarm system by the Owner.

C. On classroom, in-patient medical and Housing projects, also submit a signed and dated FS-12A Form to the Michigan Bureau of Fire Services.

3.4 COMMISSIONING

A. Perform Commissioning activities per Related Sections above.

3.5 TRAINING

DELETE A AND B IF IT IS KNOWN IN ADVANCE THAT THIS TRAINING HAS ALREADY OCCURRED.

A. Provide the Owner’s Fire Alarm Technicians with classroom training on the operation and maintenance of this model of system. This training shall be by the Manufacturer and shall be the same training as given to the Manufacturer's field service technicians. The University will pay the travel costs to the Manufacturer's training site. If the Owner's Technicians have already received operations and maintenance training from the manufacturer on this model of system, this training requirement will be waived.

B. Provide the Owner’s Fire Alarm Technicians with classroom training on the programming of this model of system. This training shall be by the Manufacturer and shall be the same training given to the Manufacturer's field service technicians. The University will pay the travel costs to the Manufacturer's training site. If the Owner's Technicians have already received programming training on this model of system, this training requirement will be waived.

C. Train the Owner’s Fire Alarm Technicians on unfamiliar components installed in this system.

D. Walk the Owner's Fire Alarm Technicians through the building and identify the locations of fire alarm devices hidden from plain view.

E. Train UMHHC Security and the OSEH Fire Inspectors on the basic operation of the system, including how to acknowledge audible notification appliances after an alarm.

DELETE THE FOLLOWING TWO PARAGRAPHS WHEN EMERGENCY VOICE/ALARM COMMUNICATIONS IS NOT INCLUDED.

F. Train UMHHC Security and the OSEH Fire Inspectors on how to override the smoke control systems, on how to use the emergency voice/alarm communications, and on how to use the Fire Department telephone communications systems. Invite representatives from the Ann Arbor Fire Department to this training.

G. Train the Facility Manager on how to use the emergency voice/alarm communications system.

END OF SECTION 283102

OUT TO BID

DESIGN GUIDELINES

1.0 CODES AND REGULATORY AGENCIES

2.0 PROJECT PROCEDURES

3.0 SUSTAINABILITY

4.0 SPECIAL INSTRUCTIONS TO DESIGNERS

5.0 SPECIAL BUILDING AREAS

6.0 TECHNICAL REQUIREMENTS

7.0 MASTER SPECIFICATIONS

7.1 ARCHITECTURAL

7.2 MECHANICAL

7.3 ELECTRICAL

7.4 SITE/CIVIL

8.0 PREFERRED MANUFACTURERS LIST

9.0 STANDARD DETAILS AND SCHEDULES

10.0 CHANGES TO DESIGN GUIDELINES

7.4 SITE/CIVIL

		Last Revision	Replaces Section
Division 31 Earthwork			
312000 Earth Moving	W	December 2012	02300
312323 Fill	W	December 2012	02315
312326 Flowable Fill	W	December 2012	02310
312500 Erosion and Sedimentation Controls	W	January 2017	02215
Division 32 Exterior Improvements			
329210 Lawn Repair	W	December 2012	02935
Division 33 Utilities			
331100 Water Distribution Piping	W	July 2017	
333100 Sanitary Sewer	W	June 2017	
334100 Storm Utility Drainage	W	February 2017	

© 2018 Regents of the University of Michigan
Design by Michigan Creative

326 East Hoover, Ann Arbor, MI 48109-1002
Phone: (734) 763-3020
Contact Us

UNIVERSITY OF MICHIGAN
ARCHITECTURE, ENGINEERING AND CONSTRUCTION

ARCHITECTURE & ENGINEERING
326 East Hoover, Mail Stop B
Ann Arbor, MI 48109-1002
Phone: 734-764-3414
Fax: 734-936-3334

BuildingName
The Description of the Project
P00000000 0000

SPECIFICATION DIVISION 31

NUMBER SECTION DESCRIPTION

DIVISION 31 EARTHWORK
SECTION 312000 – EARTH MOVING

END OF CONTENTS TABLE

DIVISION 31 EARTHWORK
SECTION 312000 – EARTH MOVING

THIS SECTION IS FOR VERY LIMITED EXCAVATION AND BACKFILL PROJECTS. FOR BUILDING ADDITIONS AND OTHER SIGNIFICANT STRUCTURES, USE THE AIA MASTERSPEC SECTION OF SAME NUMBER AND NAME.

2/07 - SUBBASE COMPACTION CHANGED TO FROM 95% TO 98%

PART 1 - GENERAL

1.1 SUMMARY

A. This Section includes the following:

1. Preparing sub-grades for slabs-on-grade and walks.
2. Excavating.
3. Drainage and moisture-control fill course for slabs-on-grade.
4. Sub-base course for walks.
5. Subsurface drainage backfill for walls and trenches.
6. Excavating and backfilling trenches within building lines.
7. Excavating and backfilling for underground mechanical and electrical utilities and appurtenances.

1.2 DEFINITIONS

A. Unauthorized excavation consists of removing materials beyond indicated sub-grade elevations or dimensions without direction by the Architect. Unauthorized excavation, as well as remedial work directed by the Architect, shall be at the Contractor's expense.

PART 2 - PRODUCTS

2.1 SOIL MATERIALS

A. General: Provide approved borrow soil materials from off-site when sufficient approved soil materials are not available from excavations.

B. Satisfactory Soil Materials: ASTM D 2487 soil classification groups GW, GP, GM, SW, SP, and SM; free of rock or gravel larger than 2 inches in any dimension, debris, waste, frozen materials, vegetation and other deleterious matter.

C. Unsatisfactory Soil Materials: ASTM D 2487 soil classification groups GC, SC, ML, MH, CL, CH, OL, OH, and PT.

D. Backfill Materials: Satisfactory soil materials.

E. Sub-base Material: MDOT Class II; washed, graded sand, ASTM C 136, with 100 percent passing a 3-inch sieve, not less than 60 percent passing a 1-inch sieve, and not more than 30 percent passing a No. 100 sieve.

F. Drainage Fill: Washed, evenly graded mixture of crushed stone, or crushed or uncrushed gravel, ASTM D 448, coarse aggregate grading size 57, with 100 percent passing a 1-1/2-inch sieve and not more than 5 percent passing a No. 8 sieve.

G. Filtering Material: Evenly graded mixture of natural or crushed gravel or crushed stone and natural sand, with 100 percent passing a 1-1/2-inch sieve and 0 to 5 percent passing a No. 50 sieve.

H. Impervious Fill: Clayey gravel and sand mixture capable of compacting to a dense state.

PART 3 - EXECUTION

3.1 PREPARATION

A. Protect structures, utilities, sidewalks, pavements, and adjacent plant materials from damage caused by earthwork operations.

3.2 EXCAVATION

A. Excavate to indicated elevations and dimensions within a tolerance of plus or minus 0.10 foot.

1. Excavations for Footings: Do not disturb bottom of excavation. Excavate by hand to final grade just before placing concrete reinforcement. Trim bottoms to required lines and grades to leave solid base to receive other work.
2. Excavation for Walks: Excavate surfaces under walks to indicated cross sections, elevations, and grades.
3. Excavation for Utility Trenches: Excavate trenches to indicated slopes, lines, depths, and invert elevations.
   a. Excavate trenches to uniform widths to provide a working clearance on each side of pipe or conduit.
   b. Trench Bottoms: Excavate and shape trench bottoms to provide uniform bearing and support of pipes and conduit.

ALWAYS INCLUDE NEXT TWO PARAGRAPHS FOR PROJECTS REQUIRING EXCAVATION.

B. During Work activities if suspect contaminated soil, groundwater, or other unknown material is encountered contact both University of Michigan Construction Management Representative and UM OSEH Hazardous Materials and Remediation Services Program (phone no. 743-763-6973) immediately. Suspect contaminated soil may exhibit chemical or unusual odors, staining, unusual coloring, and/or contain man-made debris. Suspect contaminated groundwater may exhibit chemical or unusual odors, unusual coloring, and/or sheen.

C. Immediately cease all excavation, dewatering, transport, or disturbance of the suspect material until given direction by University of Michigan Construction Management Representative.

D. Fill unauthorized excavation under foundations by extending indicated bottom elevation of concrete foundation or footing to excavation bottom.

3.3 UTILITY TRENCH BACKFILL

A. Place and compact initial backfill of satisfactory soil material or sub-base material, free of particles larger than 1 inch, to a height of 12 inches over the utility pipe or conduit.

B. Coordinate backfilling with utilities testing.

C. Place and compact final backfill of satisfactory soil material to final sub-grade.

INCLUDE BELOW FOR BACKFILLING AT FOOTING DRAINS.

3.4 SUBSURFACE DRAINAGE BACKFILL

A. Drainage Backfill: Place and compact drainage backfill of filtering material over subsurface drain, in width indicated, to within 12 inches of final sub-grade. Overlay drainage backfill with one layer of filter fabric, overlapping edges at least 6 inches.

B. Impervious Fill: Place and compact impervious fill material over drainage backfill to final sub-grade.

3.5 COMPACTION

A. Place backfill materials in layers not more than 8 inches in loose depth for material compacted by heavy compaction equipment, and not more than 4 inches in loose depth for material compacted by hand-operated tampers.

B. Place backfill materials evenly on all sides of structures to required elevations. Place backfill and fill uniformly along the full length of each structure.

C. Compact soil to not less than 95 percent maximum dry density according to ASTM D 1557.

3.6 SUBBASE COURSE

A. Under walks, place sub-base course material on prepared sub-grades.

1. Compact sub-base course at optimum moisture content to required grades, lines, cross sections and thickness to not less than 98 percent of ASTM D 4254 relative density.
2. When thickness of compacted sub-base course exceeds 6 inches, place materials in equal layers, with no layer more than 6 inches thick or less than 3 inches thick when compacted.

3.7 DRAINAGE FILL

A. Under slabs-on-grade, place drainage fill course on prepared sub-grade.

1. Compact drainage fill to the required cross sections and thickness.
2. When compacted thickness of drainage fill exceeds 6 inches thick place materials in equal layers, with no layer more than 6 inches thick; less than 3 inches thick when compacted.

3.8 DISPOSAL OF SURPLUS AND WASTE MATERIALS

A. Disposal: Remove surplus satisfactory soil and waste material, including unsatisfactory soil, trash, and debris, and legally dispose of it off the Owner's property.

END OF SECTION 312000

UNIVERSITY OF MICHIGAN
ARCHITECTURE, ENGINEERING AND CONSTRUCTION

ARCHITECTURE & ENGINEERING
326 East Hoover, Mail Stop B
Ann Arbor, MI 48109-1002
Phone: 734-764-3414
Fax: 734-936-3334

BuildingName
The Description of the Project
P00000000 0000

SPECIFICATION DIVISION 31

NUMBER SECTION DESCRIPTION

DIVISION 31 EARTHWORK
SECTION 312323 – FILL

END OF CONTENTS TABLE

DIVISION 31 EARTHWORK
SECTION 312323 – FILL

PART 1 - GENERAL

THIS SECTION SPECIFIES ENGINEERED COMPACTED GRANULAR FILL MATERIAL. USE ONLY WHEN FILL MUST BE ENGINEERED, NOT FOR ORDINARY BELOW-SLAB USE.

1.1 SUMMARY

A. Extent of engineered granular fill indicated on drawings.

B. Type of engineered granular fill is compacted sand and gravel, installed in layers and tested for compliance with requirements.

1.2 QUALITY ASSURANCE

A. Employ an approved Geotechnical Testing Laboratory to evaluate and confirm compaction effort by testing for moisture content, and density of materials in place. For each 6 inch lift, test 6 locations at intervals not exceeding 25 feet. Immediately obtain test results, and re-compact and re-test areas not conforming to specified compaction requirements prior to placing additional fill materials.

PART 2 - PRODUCTS

2.1 MATERIALS

A. Comply with the following Michigan Department of Transportation "1984 Standard Specifications for Construction" Section 8.02.06 for Granular Material Class I:

1. Sieve Analysis: ASTM C 136
2. Total Percent Passing - Dry Weights:
   a. For 2-inch: 100 percent.
   b. For 1/2-inch: 45-85 percent.
   c. For No. 4: 20-85 percent.
   d. For No. 30: 5-3 percent.
3. Percent Loss by Washing - Dry Weights: ASTM C 117; 0-5 percent.

B. Provide Granular Materials consisting of one, or any combination of, the following:

1. Sand; gravel; crushed stone; foundry sand; iron blast-furnace slag; reverberatory-furnace slag.
2. Provide foundry sand free of combustible materials and containing negligible quantities of iron.

C. The following materials are not permitted:

1. Cementitious shale.
2. Crushed concrete.

PART 3 - EXECUTION

3.1 PLACEMENT AND COMPACTION

A. Place fill materials in layers not exceeding 6 inches and compacted with portable pneumatic tampers and vibratory compactors to not less than 95 percent of maximum dry density as determined in accordance with ASTM D 1557 (modified Proctor).

END OF SECTION 312323

UNIVERSITY OF MICHIGAN
ARCHITECTURE, ENGINEERING AND CONSTRUCTION

ARCHITECTURE & ENGINEERING
326 East Hoover, Mail Stop B
Ann Arbor, MI 48109-1002
Phone: 734-764-3414
Fax: 734-936-3334

BuildingName
The Description of the Project
P00000000 0000

SPECIFICATION DIVISION 31

NUMBER SECTION DESCRIPTION

DIVISION 31 EARTHWORK
SECTION 312326 – FLOWABLE FILL

END OF CONTENTS TABLE

DIVISION 31 EARTHWORK
SECTION 312326 – FLOWABLE FILL

PART 1 - GENERAL

THIS SECTION SPECIFIES A PUMPABLE CONCRETE GROUT MATERIAL WITH LIMITED SHRINKAGE - USED IN SPECIAL CIRCUMSTANCES ONLY.

1.1 SUMMARY

A. Work Included: Class A Compacted Fill as indicated on drawings.

1. In addition, install embedded items furnished under Division 05 Section "Metal Fabrication".

1.2 SUBMITTALS

A. Submittals: In addition to product data, submit proposed mix design, including slump and weight data; and copy of laboratory test report showing strengths achieved and expected curing time.

PART 2 - PRODUCTS

2.1 ACCEPTABLE MANUFACTURERS

A. Manufacturer: Provide materials manufactured by the following:

1. Flo-Fill Co., 1008 Scheurmann St., Essexville, Mi 48732; phone no. (517)-893-1493.
   a. "Flo-Fill" compacted, class A, fill; complying with the following:
2. Fly Ash: approximately 1950 pounds per cubic yard.
3. Portland cement: approximately 85 pounds per cubic yard.
   a. Water: 60 to 70 gallons per cubic yard.
4. Minimum Cured Strength: 6000 pounds per square foot.
5. Dry Weight: 60 to 70 pounds per cubic foot.

2.2 MIXING

A. Mix material on site in strict accordance with manufacturer's instructions.

PART 3 - EXECUTION

3.1 INSTALLATION

A. Placing: Pump mixture into place in fluid state to eliminate compaction effort. Spread and level to grades indicated on drawings.

B. Curing: Cure by drying for a minimum of 7 calendar days before placing additional construction over fill material.

END OF SECTION 312326

UNIVERSITY OF MICHIGAN
ARCHITECTURE, ENGINEERING AND CONSTRUCTION

ARCHITECTURE & ENGINEERING
326 East Hoover, Mail Stop B
Ann Arbor, MI 48109-1002
Phone: 734-764-3414
Fax: 734-936-3334

BuildingName
The Description of the Project
P00000000 0000

SPECIFICATION DIVISION 31

NUMBER SECTION DESCRIPTION

DIVISION 31 EARTHWORK
SECTION 312500 – SOIL EROSION AND SEDIMENTATION CONTROLS

END OF CONTENTS TABLE

DIVISION 31 EARTHWORK
SECTION 312500 – SOIL EROSION AND SEDIMENTATION CONTROLS

AUGUST, 2005 - UPDATED TO REFLECT CURRENT REQUIREMENTS OF UM OSEH.

DUE TO REGULATORY REQUIREMENTS, DO NOT EDIT THIS SECTION OTHER THAN WHERE INDICATED BY COMMENTARY.

CONSULT WITH OSEH ON ALL PROJECTS FOR WHICH SOIL EROSION AND SEDIMENTATION CONTROL MIGHT BE REQUIRED IN ORDER TO DETERMINE IF THE PROJECT DOES REQUIRE SESC AND TO DETERMINE APPROPRIATE SESC MEASURES FOR THE PROJECT. IF THE PROJECT QUALIFIES FOR SESC, SUBMIT A PROJECT NOTIFICATION FORM TO OSEH. FORM CAN BE DOWNLOADED FROM WEB SITE WWW.OSEH.UMICH.EDU/SESCAPPA.PDF

IF THIS SECTION IS INCLUDED IN THE SPECIFICATIONS, ALSO INCLUDE ACCOMPANYING SOIL EROSION AND SEDIMENTATION CONTROLS SUPPLEMENTAL CONDITIONS IN THE FRONT END DOCUMENTS.

PART 1 - GENERAL

1.1 SUMMARY

A. This section includes conducting earthwork and earth change activity operations in a manner to protect Waters of the State (of Michigan), storm drains, and adjacent properties from soil erosion and sedimentation.

1.2 DEFINITIONS

A. "Waters of the State" includes the Great Lakes and their connecting waters, lakes, ponds and streams which may or may not be serving as a County drain as defined by the drain code; or any other body of water that has definite banks, a bed and visible evidence of a continued flow or continued occurrence of water or wetlands regulated under Part 303.

1.3 SUBMITTALS

A. Submit product information for materials proposed for use.

1.4 QUALITY CONTROL

A. Requirements of Regulatory Agencies: For earth changes, comply with the following:

DELETE BELOW IF SITE IS LESS THAN ONE ACRE AND MORE THAN 500 FEET FROM WATERS OF THE STATE.

1. Part 91, Soil Erosion and Sedimentation Control (SESC) of the Natural Resource & Environmental Protection Act, 1994 PA 451, as amended (Part 91).

ALWAYS INCLUDE BELOW.

2. The University of Michigan Soil Erosion & Sedimentation Control Procedures.

1.5 INSPECTIONS

The U-M Department of Environment, Health and Safety (EHS) or their designee, who have received a MDEQ SESC certificate of training, will inspect sites weekly during construction activities and within 24 hours of a significant rain event (for sites 1 acre or more in size) to ensure compliance with the U-M SESC Procedures and Part 91 SESC Regulations. These inspections will continue from the beginning of earthwork until the site is stabilized.

1.6 PERFORMANCE REQUIREMENTS

A. Implement the soil erosion and sedimentation control plan including required maintenance during construction and final removal as directed in the plans, and as needed per site conditions and as required by site inspections by U-M EHS.

B. Control runoff, soil erosion, and sedimentation. No sediment should leave the site.

C. Prevent wind erosion. No visible emissions (dust) should leave the site.

D. Comply with U-M Soil Erosion and Sedimentation Control Procedures.

1.7 REFERENCES

A. Southeast Michigan Council of Governments Low Impact Development Manual

PART 2 - MATERIALS (NOT APPLICABLE)

PART 3 - EXECUTION

3.1 GENERAL

A. Where the following events result in the need for additional or modified soil erosion and sedimentation control installations to meet the objective of the referenced procedures, provide remedial installations on a timely basis.

1. Unanticipated alterations to the construction schedule.
2. Unanticipated site conditions except Acts of God such as a tornado or fire.

B. Install temporary erosion and sedimentation control measures prior to or upon commencement to earthwork activities.

1. Install an entrance anti-tracking pad with a minimum of 50 feet in length. A geotextile filter fabric should be placed under 6 inches of limestone aggregate.
2. Install temporary inlet protection at all adjacent and down-gradient storm water inlets, catch basins and manholes that may be impacted.

BELOW IS ONE EXAMPLE OF A PERIMETER BARRIER. MODIFY TO SUIT PROJECT.

3. Install silt fence with stakes on the side down gradient from the disturbed area. Toe in six inches of the fencing material.
4. Place stockpiles and other spoil piles away from the drainage system to minimize sediment transport. Keep as few stockpiles as possible during the course of the project. If the stockpile and/or spoil pile must remain on-site overnight, or if the weather conditions indicate the chance for precipitation,
   a. cover the pile with water repellent material to prevent erosion or
   b. install silt fencing or appropriate sedimentation barrier around the base of the pile to prevent transport of sediment to the storm water system and wet the pile as needed to prevent wind erosion, or
   c. apply other control methods as appropriate to the site.
5. Where runoff enters the existing storm water system, protect the storm system from sedimentation.
   a. Temporary inlet protection must prevent the release of sediment and allow for proper drainage.
      1) Use of burlap is not acceptable as a SESC measure.
      2) If filter fabric is used on drains, ensure the filter fabric is placed over (not under) the storm grates to facilitate maintenance (cleaning) of the controls.

3) If high storm water flows are expected, use silt sacks in lieu of filter fabric for drain protection. Based on site conditions select regular or high flow silt sacks as appropriate.

C. Utilize a water truck as needed for dust control.

D. Utilize a sweeping machine to remove sediment tracked onto the pavement on a daily basis at minimum. Use sweeper more frequently as dictated by site conditions and/or as recommended by U-M EHS Inspector.

E. Maintain erosion and sedimentation controls on a daily basis until the contract has been completed and accepted. Maintenance shall include:

1. Repair of damaged installations.
2. Replacement of lost soil erosion & sedimentation control measures.
3. Periodic removal of collected silt and sedimentation as required or directed to maintain effectiveness of the silt traps, filters and basins.

F. Correct non-conforming soil erosion and sedimentation control measures on a timely basis, within 24 hours if Waters of the State are being impacted or could be impacted, or within 5 days if not impacting Waters of the State.

G. Complete permanent soil erosion control measures for all slopes, channels, ditches, or any disturbed land area within 5 calendar days after final grading or the final earth change has been completed. Maintain temporary control measures until permanent soil erosion control measures are in place and the area is stabilized.

3.2 CLEAN UP

A. Remove temporary erosion control measures after permanent soil erosion measures are in place and the area is stabilized, unless ordered by the U-M EHS Inspector to remain in place. Care shall be taken during removal to prevent soil erosion and sedimentation.

END OF SECTION 312500

UNIVERSITY OF MICHIGAN
ARCHITECTURE, ENGINEERING AND CONSTRUCTION

ARCHITECTURE & ENGINEERING
326 East Hoover, Mail Stop B
Ann Arbor, MI 48109-1002
Phone: 734-764-3414
Fax: 734-936-3334

BuildingName
The Description of the Project
P00000000 0000

SPECIFICATION DIVISION 32

NUMBER SECTION DESCRIPTION

DIVISION 32 EXTERIOR IMPROVEMENTS
SECTION 329210 - LAWN REPAIR

END OF CONTENTS TABLE

DIVISION 32 EXTERIOR IMPROVEMENTS
SECTION 329210 - LAWN REPAIR

THIS SECTION SPECIFIES LAWN REPAIR FOR DUMPSTER AND TRUCK TIRE DAMAGE. REFER MORE EXTENSIVE LAWN WORK TO LANDSCAPE ARCHITECT.

2/07 - ADDED NOTE TO REQUIRE 4" MIN. TOPSOIL

PART 1 - GENERAL

1.1 SUMMARY

A. Extent of lawn repair includes areas damaged by construction operations, including movement of heavy equipment, dumpster locations and similar operations.

B. Types of lawn repair include the following:

1. Grading and fine raking.
2. Seeding.
3. Mulching.

1.2 SUBMITTALS

A. Product data or certificates of conformance indicating that products used comply with requirements.

PART 2 - PRODUCTS

2.1 MATERIALS

A. Seed: Fresh, clean, dry, new-crop seed composed of varieties, in equal proportions, tested for minimum percentages by weight of purity and germination as follows:

1. Baron Kentucky Bluegrass; 98% purity; 80% germ.
2. Nugget Kentucky Bluegrass; 98% purity; 90% germ.
3. Touchdown Kentucky Bluegrass; 98% purity; 90% germ.
4. Pennlawn Red Fescue; 98% purity; 90% germ.
5. Manhattan Ryegrass; 97% purity; 90% germ.

PART 3 - EXECUTION

3.1 PREPARATION

A. Thoroughly loosen and grade soil to true lines, free from unsightly variation, lumps, ridges and depressions. Remove sticks, stones, roots and other objectionable material over 1 inch in any dimension that might interfere with the formation of a finely pulverized seed bed.

B. Level displaced soil around perimeter of ruts and depressions.

C. Distribute topsoil on damaged lawn areas in quantity sufficient to provide repaired areas that are level and uniform with adjacent undisturbed lawn areas.

D. Spread, cultivate and lightly compact a minimum of 4" topsoil to prevent future settlement; drag and grade to finished grade.

3.2 APPLICATION

A. Rake seed uniformly to an average depth of 1/4 inch, and at a rate of 2.3 lb. per 1000 sq. ft. Lightly roll the seed bed to provide good moisture contact between the seed and soil.

B. Mulch seeded areas with straw.

C. Water thoroughly and immediately with a fine mist until straw is compacted and soil is soaked to a depth of 3 inches.

END OF SECTION 329210

FACILITIES & OPERATIONS
ARCHITECTURE, ENGINEERING AND CONSTRUCTION
UNIVERSITY OF MICHIGAN

BuildingName
The Description of the Project
P00000000 0000

SPECIFICATION DIVISION 33
NUMBER SECTION DESCRIPTION

DIVISION 33 UTILITIES

SECTION 331100 - WATER DISTRIBUTION PIPING

END OF CONTENTS TABLE

Delete this cover sheet in the specifications set.

Add section 22113 to the overall title sheet.

Material specifications within the City of Ann Arbor must meet or exceed City of Ann Arbor current material standards. Note that their Orange book and web link may be outdated.
http://www.a2gov.org/departments/engineering/Pages/Engineering-and-Contractor-Resources.aspx Work through U-M AEC regarding materials.

U-M standard is minimum cl 52 DI water main.

DIVISION 33 UTILITIES

SECTION 331100 - WATER DISTRIBUTION PIPING

PART 1 - GENERAL

1.1 RELATED DOCUMENTS

A. Drawings and general provisions of the Contract, including General and Supplementary Conditions and Division 01 Specification Sections, apply to this Section.

1.2 SUMMARY

A. This Section includes water-distribution piping and related components outside the building for [**water main**] [**domestic water service leads**] [**fire service leads**].Edit for project specific.

1.3 DEFINITIONS

Retain abbreviations that remain after this Section has been edited.

A. AASHTO: American Association of State and Highway Transportation Officials.

B. ACI: American Concrete Institute.

C. ANSI: American National Standards Institute.

D. ASTM: American Society for Testing and Materials.

E. AWWA: American Water Works Association.

F. HDPE: High Density Polyethylene.

G. MDEQ: Michigan Department of Environmental Quality.

H. MDOT: Michigan Department of Transportation.

I. NSF: National Sanitation Foundation.

J. OSHA: Occupational Safety and Health Administration.

K. PPM: Parts Per Million.

L. PSI: Pounds per Square Inch.

M. SDR: Standard Dimension Ratio.

N. UL: Underwriters Laboratory.

O. UM: University of Michigan.

1.4 ACTION SUBMITTALS

A. Product Data: For each type of product indicated.

B. Shop Drawings: Detail precast concrete manhole assemblies and indicate dimensions, method of field assembly, and components.

C. Manufacturer Certification: All pipe and material furnished shall be accompanied by the manufacturer's certification.

D. Cut sheets for Contractor layout and staking locations.

1.5 INFORMATIONAL SUBMITTALS

A. Field quality-control test reports.

1.6 QUALITY ASSURANCE

Retain and edit first paragraph and subparagraphs below if not applicable.

A. Regulatory Requirements:

1. Comply with requirements of the City of Ann Arbor, MDEQ, and U-M.

2. Comply with standards of authorities having jurisdiction for potable-water-service piping, including materials, installation, testing, and disinfection.

3. Comply with standards of authorities having jurisdiction for fire-suppression water-service piping, including materials, hose threads, installation, and testing.

B. NFPA Compliance: Comply with NFPA 24 for materials, installations, tests, flushing, and valve and hydrant supervision for fire-service-main piping for fire suppression.

C. NSF Compliance:

Delete first subparagraph below if NSF 14 is not applicable.

1. Comply with NSF 14 for plastic potable-water-service piping.

2. Comply with NSF 61 Annex G for materials for water-service piping and specialties for domestic water.

1.7 DELIVERY, STORAGE, AND HANDLING

A. Preparation for Transport: Prepare valves, including fire hydrants, according to the following:

1. Ensure that valves are dry and internally protected against rust and corrosion.
2. Protect valves against damage to threaded ends and flange faces.
3. Set valves in best position for handling. Set valves closed to prevent rattling.

B. During Storage: Use precautions for valves, including fire hydrants, according to the following:

1. Do not remove end protectors unless necessary for inspection; then reinstall for storage.

2. Protect from weather. Store indoors and maintain temperature higher than ambient dew-point temperature. Support off the ground

or pavement in watertight enclosures when outdoor storage is necessary.

C. Handling: Use sling to handle valves and fire hydrants if size requires handling by crane or lift. Rig valves to avoid damage to exposed parts. Do not use handwheels or stems as lifting or rigging points.

D. Deliver piping with factory-applied end caps. Maintain end caps through shipping, storage, and handling to prevent pipe-end damage and to prevent entrance of dirt, debris, and moisture.

E. Protect stored piping from moisture and dirt. Elevate above grade. Protect flanges, fittings, and specialties from moisture and dirt.

F. Store plastic piping protected from direct sunlight. Support to prevent sagging and bending.

G. Product Inspection: All materials furnished shall be subject to inspection on arrival at the job site by the Owner or Owner's agent. The purpose of the inspection shall be to cull and reject products that, independent of physical tests specified under the standard specifications designated herein, fail to conform to the requirements of these specifications. Materials shall be subject to rejection on account of any of the following:

1. Variation in any dimension exceeding the permissible variations given in the material specifications. Pipe in all cases shall be full diameter.
2. Fractures or cracks passing through the barrel or socket.
3. Chips or fractures on the interior of the pipe exceeding two inches in length, one inch in width, or depth more than ¼ of the thickness of the wall.
4. Blisters that are either broken, exceed three inches in diameter, or project more than 1/8 inch above the surrounding surface of the pipe.
5. Variation of more than 1/16 inch per lineal foot in alignment of pipe intended to be straight.

H. Rejected materials shall be clearly marked by the Inspector and immediately removed from the site of work by the Contractor, without cost to the Owner.

1.8 PROJECT CONDITIONS

Retain this Article if interruption of existing water-distribution service is required.

A. Interruption of Existing Water-Distribution Service: Do not interrupt service to facilities occupied by Owner or others unless permitted under the following conditions and then only after arranging to provide temporary water-distribution service according to requirements indicated:

1. Notify Owner no fewer than five working days in advance of proposed interruption of service. Coordination of a building system water shutdown requires a minimum of ten working days.

2. Do not proceed with interruption of water-distribution service without Owner's written permission.

1.9 COORDINATION

Edit this Article to suit Project if new water-distribution piping will connect to other on-site water-distribution piping.

A. Coordinate inspection with City of Ann Arbor or with authority having jurisdiction and with Owner's representative.

B. Coordinate water main testing and connection to existing water main with the City of Ann Arbor or authority having jurisdiction.

C. Coordinate service shutdowns with Owner's representative for impacted facilities.

D. Contractor shall **not** turn valves – coordinate with City of Ann Arbor or the authority having jurisdiction, and with University of Michigan Utilities.

E. Coordinate water service installation with the City of Ann Arbor or authority having jurisdiction.

1. For two-inch copper service or smaller, City of Ann Arbor Field Operations shall tap the water main and supply and install the proposed water service from the main to the curb box. Contractor shall supply and install the water service from the curb box to the building.

PART 2 - PRODUCTS

Note that the City of Ann Abor current approved manufacturers and products are to be referenced. The City's standard specification book may be outdated. Work with AEC to specify manufactures and products.

2.1 DUCTILE-IRON PIPE AND FITTINGS

A. Mechanical-Joint Piping:

1. Pipe: AWWA C151, thickness class 52.
   a. All pipe shall have standard thickness cement mortar lining and asphaltic seal coat in accordance with ANSI/AWWA C104/A21.4 and coated outside with asphaltic coating in accordance with ANSI/AWWA C151/A21.51.
   b. The following information shall be clearly marked on each length of pipe:
      1) Pipe designation and class.
      2) Name and trademark of the manufacturer.
      3) Country of origin. American steel only.
      4) Year the pipe was produced.

2. Mechanical Fittings: AWWA C111, for joint restraint system and bolts.
    a. Mega lug joint restraint system by EBAA Iron Sales, Inc.
    b. Bolts shall be high strength, low alloy steel bolts only.
    c. The following information shall be clearly marked on each fitting:
        1) Pressure rating of the fitting.
        2) Nominal diameters of the opening.
        3) Name and trademark of the manufacturer.
        4) Country of origin. American steel only.
        5) Number of degrees or fraction of the circle on all bends.
        6) Ductile iron fittings shall have the letters "DI" cast on them.
3. Gaskets: AWWA C111, rubber, of shape matching pipe and fittings.
    a. Lubricants used shall be supplied, or recommended, by the pipe manufacturer and the joints shall be coupled in accordance with manufacturer's requirements.
4. Polyethylene wrap per ANSI/AWWA C105/A21.5

B. Push-on-Joint Piping:

1. Pipe: AWWA C151, thickness class 52. Pipe beneath railroads shall be thickness class 56.
    a. All pipe shall have standard thickness cement mortar lining and asphaltic seal coat in accordance with ANSI/AWWA C104/A21.4 and coated outside with asphaltic coating in accordance with ANSI/AWWA C151/A21.51.
    b. The following information shall be clearly marked on each length of pipe:
        1) Pipe designation and class.
        2) Name and trademark of the manufacturer.
        3) Country of Origin. American steel only
        4) Year the pipe was produced.
2. Standard Fittings: AWWA C110, ductile iron.
    a. All pipe fittings shall have standard thickness cementer mortar lining and asphaltic seal coat in accordance with ANSI/AWWA C104/A21.4 and coated outside with asphaltic coating in accordance with ANSI/AWWA C151/A21.51.
    b. Push-on Joints to be used unless otherwise noted.
    c. Restrained Joints
        1) TR-Flex restrained joint by U.S. Pipe.
        2) Lok-Ring joint by American Ductile Iron Pipe.
        3) Or Engineer approved equal.
    d. The following information shall be clearly marked on each fitting:
        1) Pressure rating of the fitting.
        2) Nominal diameters of the openings.
        3) Name and trademark of the manufacturer.
        4) Country of origin. American steel only.
        5) Number of degrees or fraction of the circle on all bends.
        6) Ductile iron fittings shall have the letters "DI" cast on them.
3. Gaskets: AWWA C111, rubber, of shape matching pipe and fittings.
    a. Restrained Joints
        1) Fast-Grip by American Pipe.

2) Field-Lok by U.S. Pipe.
3) Or Engineer approved equal.

b. Lubricants used shall be supplied, or recommended, by the pipe manufacturer and the joints shall be coupled in accordance with manufacturer's requirements.

4. Polyethylene wrap per ANSI/AWWA C105/A21.5

C. Domestic Water Service:

1. Pipe: ASTM B88, Type K Copper.
   a. For 2 inch and smaller water services. Larger water services shall utilize ductile iron pipe covered above.
2. Fittings: ANSI B16.22, wrought copper.
   a. Minimize joints. Joints shall be flare connection or brazed.
   b. All fittings shall be lead free.

2.2 HDPE PIPE AND FITTINGS

A. HDPE Pipe, AASHTO/ASTM M294/F892, AWWA C906 meeting ANSI/NSF Standard 14, SDR 7.0 corrugated with integrally formed smooth interior.

1. N-12 pipe by Advanced Drainage Systems, Inc. (ADS).
2. Titeline by Hancor.
3. Or Engineer approved equal.
4. AWWA C906 and NSF 14 identifications shall appear on exterior wall print line.

B. HDPE Joints, ASTM D3212, ANSI/NSF Standard 14, watertight joints using watertight sleeves.

1. Sleeves shall have an indentation in the center to ensure proper positioning of the pipe.
2. Sleeves shall be factory installed on one end of the pipe with a factory installed gasket on the other end.
3. Joints for pipe between 21" and 24" may also use silt tight joints using split coupling bands and geotextile fabric.

C. Gaskets, ASTM F477, solid cross section rubber manufacturer to fit the pipe and fittings.

D. Lubricant used in making up joints shall be supplied, or recommended, by the pipe manufacturer and the joints shall be coupled in accordance with manufacturer's requirements.

2.3 CORROSION-PROTECTION/PIPING ENCASEMENT

A. Polyethylene wrap for Underground Metal Piping:

1. Standards: ANSI C105 and AWWA A21.5.

2. Color: Black

Note to Designer:
Include Steel Casing Pipe specification, as necessary.

B. Steel Casing Pipe
1. Standards: ASTM A 53, Type E or S, Grade B.

2. Material: Steel casing pipe shall meet the following schedule of thickness based on nominal diameter of casing pipe:

Nominal Diameter of Casing Pipe (inches)	Minimum Wall Thickness (inches)
Under 14	0.250
14, 16, and 18	0.312
20 and 22	0.375
24, 26, 28, and 30	0.500
32 and 34	0.563
36, 38, 40, 42, and 48	0.625

3. Identification: The following information shall be clearly marked on each length of pipe.
   a. The pipe designation and class.
   b. The name or trademark of the manufacturer.
   c. Identification of the manufacturing plant.

2.4 VALVES

A. Gate Valves, certified by UL or NSF for use in a potable water system and shall meet current City of Ann Arbor Material Standards, or authority having jurisdiction:

1. Resilient seat non-rising stem push-on.
2. Two-inch square operating nut.
3. Right-hand open.
4. Joints meeting ANSI/AWWA C111/A21.11.
5. Gate valve shall be of the following models, unless otherwise noted in the City of Ann Arbor Division III Material Standards:
   a. Series 300 and T300 NRS Double Disc Gate Valve by Waterous.
   b. A-2380 Series by Mueller.
   c. Series A by East Jordan Iron Works.
   d. AWWA 571X by Kennedy.
   e. Or Engineer approved equal.
6. 16 inch and larger gate valves shall be furnished with 3 inch valved by-pass, right-hand open.
7. 20 inch and larger gate valves shall be furnished with bronze rollers, tracks and scrapers, having enclosed beveling gearing, and shall be installed horizontally. Gearing shall consist of cut tooth cast steel gears with rolled bronze pinion shafts having a minimum mechanical advantage ratio of 2 to 1.
   a. List 14 AWWA Gate valve by Eddy – Iowa Division or James B. Clow & Sons, Inc.

B. Butterfly Valves, AWWA C504-74, certified by UL or NSF for use in a potable water system and shall meet the current City of Ann Arbor material standards, or authority having jurisdiction:

1. Two-inch square operating nut.
2. Right-hand open.
3. Butterfly valve shall be of the following models, unless otherwise noted in the City of Ann Arbor Division III Material Standards:
   a. Groundhog by Henry Pratt.
   b. Lineseal III by Mueller.
   c. Or Engineer approved equal.

C. Tapping Sleeve and Valves, rated for a minimum 250 psi working pressure, certified by UL or NSF for use in a potable water system and shall meet the current City of Ann Arbor material standards, or authority having jurisdiction.

1. Sleeve shall meet current City of Ann Arbor Material Standards or authority having jurisdiction:
   a. F-5205 by Clow.
   b. H-615 by Mueller.
   c. Series 800 by Waterous
   d. Or Engineer approved equal
2. Tapping Valve and shall meet the current City of Ann Arbor material standards, or authority having jurisdiction.
   a. Double-disk type, of the same manufacturer as the sleeve.
   b. NRS with 2-inch square operating nut.
   c. Right-hand open.
   d. Mechanical joint outlet.

D. Gate Valve Box shall meet the current City of Ann Arbor material standards, or authority having jurisdiction:

1. Buffalo type, Size D, screw type, 3-piece, 5-1/4-inch shaft.
   a. #6 base for valves 8 inches or less.
   b. #8 base for valves 10 or 12 inches.
   c. Valve standards for valves 16 inches or larger shall be coordinated with the City of Ann Arbor.
2. Casting cover shall be labelled "Water" in raised lettering.
3. Tyler 6860 or Engineer approved equal.

E. Curb Boxes shall meet the current City of Ann Arbor material standards, or authority having jurisdiction:

1. Buffalo type, Size 95E, screw type, 2-piece, 2-1/2-inch shaft, extendable from 4-1/2 feet to 6 feet.
2. Curb boxes shall meet the current City of Ann Arbor Division III Material Standards and shall be the following unless otherwise noted by the City of Ann Arbor:
   a. H-10350 by Mueller.
   b. 6500 by Tyler
   c. B-2000 by Bibby Ste. Croix
   d. Or Engineer approved equal.

Edit to meet current City of Ann Arbor products or authority having jurisdiction. U-M water main material for pipes greater than 2" shall be CL 52 DI.

2.5 FIRE HYDRANTS

A. Fire Hydrant, ANSI/AWWA C111/A21.11:
1. 6-inch mechanical joint pipe connection.
2. Two 2-1/2-inch National Standard hose connections.
3. One 3-1/2 inch Ann Arbor Standard pumper connection.
   a. 7-1/2 threads per inch.
   b. 4.05 inch outside diameter.
4. 3/8-inch pentagon operating and cap nuts.
   a. 1-3/8-inch point-to-flat at top.
   b. 1-7/16-inch point-to-flat at base.

5. Left-hand open.
6. Breakable flange construction.
7. No barrel drain.
8. Color: Red.
9. Depth of bury: 6 feet.
10. Fire hydrant shall meet the current City of Ann Arbor material standards, or authority having jurisdiction:
    a. Model 5-BR 250 by East Jordan Iron Works.

2.6 MANHOLES

Retain this Article if vaults are required and are not specified in Section 033000 "Cast-in-Place Concrete" or Section 033053 "Miscellaneous Cast-in-Place Concrete."

A. Standard Precast Concrete Manholes:

1. Description: ASTM C 478, precast, reinforced concrete, of depth indicated, with provision for sealant joints.
2. Diameter: 48 inches minimum unless otherwise indicated.
3. Ballast: Increase thickness of precast concrete sections or add concrete to base section, as required to prevent flotation.
4. Base Section: 8-inch minimum thickness for floor slab and 4-inch minimum thickness for walls and base riser section; with separate base slab or base section with integral floor.
5. Riser Sections: 4-inch minimum thickness, of length to provide depth indicated.
6. Top Section: Eccentric-cone type unless concentric-cone or flat-slab-top type as indicated; with top of cone of size that matches grade rings.
7. Joint Gaskets: ASTM C 443, rubber O-ring gasket. Joints pointed with mortar after installation, both inside and outside of the manhole.
8. Resilient Pipe Connectors: ASTM C 923, cast or fitted into manhole walls, for each pipe connection. Neoprene rubber shall meet ASTM C 443 and have a minimum thickness of 3/8 inch. Pipe clamps shall be of corrosion-resistant steel. Pipe connectors shall be one of the following:
    a. Flexible neoprene rubber boot securely clamped into a core-drilled pipe port. Pipe ports shall be core-drilled at the point of manhole manufacture and shall be accurately located within ½ inch of proposed sewer centerline.
    b. Self-adjusting mechanical pipe to manhole seal providing resilient flexible and infiltration-proof joint.
    c. Flexible rubber wedge firmly secured against a rubber gasket cast into the manhole.
    d. Engineer approved equal.
9. Steps: ASTM C 478 injection molded copolymer, polypropylene, encapsulating a ½ inch grade 60 steel reinforcing bar with an impact resistance of 300 ft-lbs and a pull out force resistance of 1500 lbs; Cast or anchor steps into sidewalls at 15-inch intervals. Step depth shall a minimum of 6 inches.
10. Grade Rings: 2-inch Reinforced-concrete rings, 2-inch minimum and 6-inch maximum height, with diameter matching manhole frame and cover.

11. Aggregate Base: Structure shall be placed on a minimum of 4 inches of 21AA limestone bedding.
12. Manholes shall be used for housing gate valves, only as called for on the plans.

B. Manhole Frames and Covers:

1. Description: East Jordan Iron Works, 1040 with type "C" lid or Engineer approved equal. Include indented top design with lettering cast into cover, using wording equivalent to "WATER".
2. Material: ASTM A 48, Class No. 30, gray iron unless otherwise indicated.

PART 3 - EXECUTION

3.1 EARTHWORK

A. Refer to Section 312000 "Earth Moving" for excavating, trenching, and backfilling.

3.2 PIPING INSTALLATION

A. General Locations and Arrangements: Drawing plans and details indicate general location and arrangement of water main. Location and arrangement of piping layout take into account design considerations. Install piping as indicated, to extent practical. Where specific installation is not indicated, follow piping manufacturer's written instructions.

B. Excavate trench according to OSHA guidelines and backfill the trench as indicated in the City of Ann Arbor utility trench details or as directed by the Engineer.

Note to Designer:
Water main connection shall be coordinated with the water supplier having jurisdiction. In some cases, this may not be City of Ann Arbor.

C. Water-Main Connection: Coordinate with City of Ann Arbor or authority having jurisdiction and Owner's representative for connections to existing water main.
1. Owner shall be notified 5 working days prior to any proposed interruption of service. Coordination of a building system shutdown requires a minimum of 10 working days' notice.
2. Dry Tap:
   a. Contractor shall coordinate with the Owner for water main gate valve shutdowns. Contractor shall not turn valves.
   b. Contractor shall provide means for maintaining the site of the tap in the dry in the event that existing water main valves provide a poor shutdown.
   c. All pipe, fittings, and appurtenances necessary to complete the water main connection shall be on site prior to excavation for the connection.
   d. No water main shutdown will take place after 12:00pm, unless expressly granted by the Owner.

3. Wet Tap:
   a. Prior to the installation of a tapping sleeve, the section of pipe to be tapped shall be cleaned of all foreign material and wire brushed to a smooth surface.
   b. The tapping sleeve shall be installed per manufacturer's guidelines.
   c. All pipe materials and appurtenances shall be disinfected with a strong chlorine solution prior to installation.
   d. Tap assembly shall be tested using the test plug tap in the sleeve with the valve closed, or by placing a tapped plug on the outlet of the valve with the valve open. The assembly shall be pressurized to 150 psi and hold the pressure for fifteen minutes.
4. Water Service Tap:
   a. 2" copper water service lead or smaller will be performed by the City of Ann Arbor's Field Operations Unit who will supply and install copper from the water main to the curb box. The Owner will be responsible for the copper lead from the curb box to the building.
   b. Greater than 2" water service and for ductile iron water service, Contractor shall tap the main and supply and install the proposed water service from the main to the building. Coordinate inspection with City of Ann Arbor or with authority having jurisdiction.

Retain paragraph a.) above if tap is made by utility company; retain Paragraph b.) above if tap is made by Contractor.

D. Setting Joints: Mechanical means shall be used for pulling home all rubber-gasketed pipe regardless of trench condition where manual means will not result in pushing and holding the pipe home.
   1. When trench box or liner is used, the Contractor shall provide and use a cable to pull the joints home and hold them in position.
   2. When work is performed in wet trenches or trenches with running sand, the Contractor shall ensure that the interior of the pipe remains clean and dry.

Retain first paragraph and subparagraphs below for tapping of pipe with connections NPS 2 (DN 50) and smaller.

E. Permissible Deflection at Joints, the deflections shall not exceed the following amounts:

Size of Pipe (Inches)	Joint Angle (Degrees)	Deflection in 18 feet (Inches)	Approx. Radius of Curve (Feet)
4	5	19	205
6	5	19	205

8	5	19	205
10	5	19	205
12	5	19	205
16	3	11	340
20	3	11	340
24	3	11	340

F. Cutting Water Main Pipe:

1. Flame or torch cutting of water main pipe is not allowed.
2. Pipe shall be cut in a manner that will not damage the pipe or cement lining of the pipe and shall provide a clean and 90 degree cut.

G. Abandoning Water Main:
1. Cut the end of the main in accordance with the section above.
2. Work with U-M Project Manager for City approved method of pipe abandonment and appurtenance removal.
3. Break down existing water structures, remove manhole casting and cover, grade rings, and top 4 feet of structure. Backfill remainder of the structure with MDOT class II sand.

H. Anchorage for Water Main Fittings and Appurtenances:
1. All plugs, caps, tees, hydrants, and bends shall be provided with a Class A concrete reaction backing (thrust block). Thrust block shall be placed between unexcavated solid ground and the fitting to be anchored.
   a. Thrust block shall be placed such that the pipe and fittings are accessible for repairs, which shall include protection of any bolts from direct contact with the concrete.
   b. Metal harnesses of tie rods or clamps may not be used instead of thrust block.
   c. Friction clamps or set-screw type retainer glands will not be allowed for thrust restraint.
   d. Restrained joint gaskets rated for 350 psi are required for vertical bends.

3.3 MANHOLE INSTALLATION

A. General: Install manholes complete with appurtenances and accessories indicated.

B. Install precast concrete manhole sections with sealants according to ASTM C 891.

C. Install FRP manholes according to manufacturer's written instructions.

D. Set tops of frames and covers flush with finished surface of manholes that occur in pavements. Set tops 3 inches above finished surface elsewhere unless otherwise indicated.

Retain paragraph below only if specified in "Manholes" Article.

E. Install manhole-cover inserts in frame and immediately below cover.

3.4 WATER MAIN TESTING

A. Contractor shall coordinate all work around water main testing. Any additional time required to obtain a passing result in any of the water test will not be considered sufficient cause for an extension of time.

B. The water main shall be disinfected and tested by the Contractor in the presence of the Public Services Director in accordance with the requirements below. The Contractor shall furnish all piping, pumps, gauges and other materials and equipment required to carry out the tests using water from the City's water mains. Any hoses which are needed to direct water from blow-offs and/or hydrants during water main testing and flushing shall be supplied by the Contractor. The City shall furnish and install one-inch corporation stops at all necessary locations, at the expense of the Contractor. The tapping of water mains, the installation of all corporations stops, and the operation of valves and hydrants is reserved for City personnel. The Contractor is required to assist in valve and hydrant operation, however. The Contractor shall give the City 48 hour's prior notice of intent and desire to test water mains. If the Contractor so desires, the Public Services Department – Engineering Division will (when personnel and equipment are available) perform disinfecting and pressure testing for the Contractor at the Contractor's expense.

C. Connections to the existing water main shall not be made until the new water main has been successfully pressure tested and has passed bacteriological testing. Final connections shall be coordinated with the Engineer. The Contractor shall coordinate all water system shutdowns with Owner's Representative and the City of Ann Arbor.

D. Construction Sequence, the normal sequence and time requirements for testing are as follows:

Isolated (Gapped) Water Main	Connected Water Main
1. Fill Main	1. Flush and Swab*
2. Pressure Test	2. Chlorinate
3. Connect One End of Main	3. Wait 24 hours
4. Flush and Swab*	4. Flush**
5. Chlorinate	5. Wait 24 hours

6. Wait 24 hours	6. Bacteriological
7. Flush**	7. Wait 24 hours
8. Wait 24 hours	8. Bacteriological
9. Bacteriological samples	9. Wait 48 hours
10. Wait 24 hours	10.Pressure Test, ifsamples pass
11. Bacteriological samples	11. Flush*
12. Wait 48 hours	12. Wait 24 hours
13. Make Final Connections	13. Bacteriological
	14. Wait 24 hours
	15. Bacteriological
	16. Wait 48 hours
	17. Make Final Connections

* Collect flush water in operable storm water retention/detention facility.

** Discharge flush water into approved sanitary sewer.

E. Hydrostatic (Pressure Test):
1. Maximum length for testing is 1,500 feet.
2. Slowly fill main and pump pressure to 150 psi. Test pressure shall be maintained between 145-155 psi.
3. Testing Period – 3 hours.
4. Water shall be chlorinated to 25 ppm.
5. If leakage exceeds maximum allowable leakage, as specified below, the joints shall be carefully inspected and any that are found to be leaking shall be removed and replaced at no cost to the Owner.
6. The following chart shows the maximum allowable leakage:

Maximum Allowable Leakage per 100 Joints at 150 psi Avg. Test Pressure

Pipe Diameter (inches)	4	6	8	10	12	16	20
Leakage (gallons/hr)	0.66	0.99	1.32	1.66	1.99	2.65	3.31

F. Flushing and Swabbing:

1. The following swabs are approved for use:
   a. Girard Aqua Swab (AS) 2 lbs/cf density swab polly-pig.
   b. Or Engineer approved equal.
2. Water main shall be flushed such that the polly-pig is pushed from end to end of the proposed water main.

G. Chlorination, disinfected in accordance with AWWA C65I "Disinfecting Water Mains" and as specified herein:

1. Water shall be chlorinated to a minimum residual 50 ppm with commercial liquid chlorine solution (sodium hypochlorite).
2. Duration shall be 24 hours with a remaining free available chlorine residual of at least 25 ppm. If less than 25 ppm residual is shown at the end of the 24 hour period, additional chlorine shall be added until a minimum 25 ppm residual is maintained for 24 hours.
3. After passing result, the chlorinated water shall be removed from the water main and disposed of into an existing, owner approved, sanitary sewer main.
4. The minimum recommended dosage of sodium hypochlorite is as follows (based on 10% available chlorine)

Recommended Minimum Chlorine Dosage to Disinfect 100 L.F. of Pipe

Pipe Diameter (inches)	10% Chlorine Solution (gallons)
6	0.153
8	0.272
10	0.426
12	0.613
16	1.090
20	1.703
24	2.452

H. Bacteriological Testing:

1. City of Ann Arbor will take samples to verify chlorine content meets specifications and for bacteriological testing.
2. 24 hours must elapse between flushing of the main and the first sample taken.
3. 48 hours are required to obtain test results for each sample.

3.5 IDENTIFICATION

Note to designer: Verify with U-M Civil and/or Design Manager if tracer wire will be necessary. HDPE water main requires tracer wire.

A. Install continuous underground tracer wire during backfilling of trench for underground water main.

Delete paragraph above if metallic water-service piping without electrically insulated fittings will be used.

END OF SECTION 221113

FACILITIES & OPERATIONS
ARCHITECTURE, ENGINEERING AND CONSTRUCTION
UNIVERSITY OF MICHIGAN

BuildingName
The Description of the Project
P00000000 0000

SPECIFICATION DIVISION 33
NUMBER SECTION DESCRIPTION

DIVISION 33 SANITARY SEWER UTILITIES
SECTION 333100 - SANITARY SEWER

END OF CONTENTS TABLE

Notes to Designer –

- **Delete this cover sheet when including in specifications. Add Division 33, section 333100 to the title sheet.**
- **Directional drilling is not covered in this master specification.**
- **SDR26 material is to be used as a minimum on all U-M projects.**

DIVISION 33 SANITARY SEWER UTILITIES

SECTION 333100 - SANITARY SEWER

Revise this Section by deleting and inserting text to meet Project-specific requirements.

PART 1 - GENERAL

1.1 RELATED DOCUMENTS

A. Drawings and general provisions of the Contract, including General and Supplementary Conditions and Division 01 Specification Sections, apply to this Section.

1.2 SUMMARY

A. This section includes the furnishing and installation of exterior sanitary sewer system. If there is a facility service lead, this exterior sanitary sewer specification for the service lead is applicable starting at five feet outside the building. There should be a cleanout 5' outside the building either on the mechanical plans or on the civil plans and is the transition point from building plumbing to site civil sanitary.

B. Section Includes: Update/add items to this specification to be project specific.

1. Pipe and fittings.
2. Cleanouts.
3. Manholes.

1.3 DEFINITIONS

Retain definition(s) remaining after this Section has been edited.

A. FRP: Fiberglass-reinforced plastic.

B. PVC: Polyvinyl chloride

C. ACI: American Concrete Institute

D. ASTM: American Society for Testing and Materials

E. AWWA: American Water Works Association

F. AASHTO: American Association of State and Highway Transportation Officials

G. SDR: Standard Dimension Ratio

1.4 ACTION SUBMITTALS

A. Product Data: For each type of product indicated.

B. Shop Drawings: For manholes and castings. Include plans, elevations, sections, details, and frames and covers.

C. Manufacturer Certification: All pipe furnished shall be accompanied by the manufacturer's certificate of test showing conformity with the Specifications. Each certificate shall identify a specific lot number, quantity of pipe, and show actual test results for the lot furnished. These certificates shall be submitted to the Inspector at the time of unloading. Coordinate unloading with Inspector.

D. Cut sheets for Contractor layout and staking locations.

E. Mandrel details and certification.

1.5 INFORMATIONAL SUBMITTALS

A. Field quality-control reports regarding elevation of pipe.

B. Testing reports, passed tests upon completion of testing.

1.6 DELIVERY, STORAGE, AND HANDLING

Retain first paragraph below for PVC,SDR piping.

A. Do not store plastic manholes, pipe, and fittings in direct sunlight.
B. Protect pipe, pipe fittings, and seals from dirt and damage.
C. Handle manholes according to manufacturer's written rigging instructions.

1.7 PROJECT CONDITIONS

Retain A. below if interruption of existing sanitary sewerage service is required.

A. Interruption of Existing Sanitary Sewerage Service: Do not interrupt service to facilities occupied by Owner or others unless permitted under the following conditions and then only after arranging to provide temporary service according to requirements indicated:

1. Notify Owner no fewer than five working days in advance of proposed interruption of service. Coordination of a building system shutdown requires a minimum of 10 working days.

2. Do not proceed with interruption of service without Owner's written permission.

B. Product Inspection: All materials furnished shall be subject to inspection on arrival at the job site by the Owner. The purpose of the inspection shall be to cull and reject products that, independent of physical tests specified under the standard specifications designated herein, fail to conform to the requirements of these specifications. Materials shall be subject to rejection on account of any of the following:

1. Variation in any dimension exceeding the permissible variations given in the material specifications. Pipe in all cases shall be full diameter.

2. Fractures or cracks passing through the barrel or socket.

3. Chips or fractures on the interior of the pipe exceeding two inches in length, one inch in width, or depth more than ¼ of the thickness of the wall.

4. Blisters that are either broken, exceed three inches in diameter, or project more than 1/8 inches above the surrounding surface of the pipe.

5. Variation of more than 1/16 inch per lineal foot in alignment of pipe intended to be straight.

C. Rejected materials shall be clearly marked by the Inspector and immediately removed from the site of work by the Contractor, without cost to the Owner.

PART 2 - PRODUCTS

If using more than one type of material and joining method, identify various materials on Drawings and show points of transition from one material to another.

2.1 PVC PIPE AND FITTINGS

A. PVC Gravity Sewer Piping:

1. Pipe: ASTM D 3034-83, SDR 26 wall thickness, PVC gravity sewer pipe with integral bell-and-spigot ends and with integral ASTM D 3212-81, elastomeric seals for gasketed joints.

   a. Lubricant used shall be supplied by the pipe manufacturer and the joints shall be coupled in accordance with manufacturer's requirements.

   b. The following information shall be clearly marked on each length of pipe:

      1) Manufacturer's name or trademark.
      2) Nominal pipe size.
      3) The PVC cell classification.
      4) The legend.
      5) The designation "Specification D 3034".

2. Fittings: ASTM D 3034-83, SDR 26 wall thickness, PVC gravity sewer pipe with integral bell-and-spigot ends and with integral ASTM D 3212-81, elastomeric seals for gasketed joints.

   a. Lubricant used shall be supplied by the pipe manufacturer and the joints shall be coupled in accordance with manufacturer's requirements.

   b. The following information shall be clearly marked on each fitting

      1) Manufacturer's name or trademark.
      2) Nominal size.
      3) The material designation "PVC".

4) "PSM".
5) The designation "Specification D 3034".

B. PVC Gravity Sewer Service Leads, Risers and Fittings:

1. Pipe: ASTM D 3034, SDR 26 PVC pipe with bell-and-spigot ends for gasketed joints.
   a. Lubricant used shall be supplied by the pipe manufacturer and the joints shall be coupled in accordance with manufacturer's requirements.
   b. The following information shall be clearly marked on each length of pipe:
      1) The pipe designation and class.
      2) The name or trademark of the manufacturer.
      3) Identification of the manufacturing plant.
      4) Testing lot number.

2. Fittings: ASTM D 3034-83, SDR 35 PVC pipe with bell ends.
   a. Lubricant used shall be supplied by the pipe manufacturer and the joints shall be coupled in accordance with manufacturer's requirements.

3. Gaskets: ASTM D 3212, elastomeric seals.

4. Adapters: For use when connecting pipe with pipe of other material or manufacturer. The nominal I.D. of adaptors shall be manufactured for that specific purpose and shall be the same size as the nominal diameter of pipe connected thereto.
   a. Adaptor shall be "CB" gasketed sewer saddle by Romac Industries, Inc. or Engineer approved equal.

2.2 CLEANOUTS

A. PVC Cleanouts:

1. Pipe: ASTM D 3034-83, SDR 26 wall thickness, PVC gravity sewer pipe with bell-and-spigot ends and with integral ASTM D 3212-81, elastomeric seals for gasketed joints.
   a. Lubricant used shall be supplied by the pipe manufacturer and the joints shall be coupled in accordance with manufacturer's requirements.
   b. The following information shall be clearly marked on each length of pipe:
      1) Manufacturer's name or trademark.
      2) Nominal pipe size.
      3) The PVC cell classification.
      4) The legend.
      5) The designation "Specification D 3034".

2. Casting: Neenah R-7506-D, EJCO 1574 or Engineer approved equal.
   a. Casting shall be stamped with "Sanitary"

3. Fittings: ASTM D 3034-83, SDR 26 wall thickness, PVC gravity sewer pipe with bell-and-spigot ends and with integral ASTM D 3212-81, elastomeric seals for gasketed joints.

   a. Lubricant used shall be supplied by the pipe manufacturer and the joints shall be coupled in accordance with manufacturer's requirements.

   b. The following information shall be clearly marked on each fitting

      1) Manufacturer's name or trademark.
      2) Nominal size.
      3) The material designation "PVC".
      4) "PSM".
      5) The designation "Specification D 3034".

2.3 MANHOLES

A. Standard Precast Concrete Manholes:

1. Description: ASTM C 478, precast, reinforced concrete, of depth indicated, with provision for sealant joints.
2. Diameter: 48 inches minimum unless otherwise indicated.
3. Ballast: Increase thickness of precast concrete sections or add concrete to base section, as required to prevent flotation.
4. Base Section: 8-inch minimum thickness for floor slab and 4-inch minimum thickness for walls and base riser section; with separate base slab or base section with integral floor.
5. Riser Sections: 4-inch minimum thickness, of length to provide depth indicated.
6. Top Section: Eccentric-cone type unless concentric-cone or flat-slab-top type as indicated; with top of cone of size that matches grade rings.
7. Joint Gaskets: ASTM C 443, rubber O-ring gasket. Joints pointed with mortar after installation, both inside and outside of the manhole.
8. Resilient Pipe Connectors: ASTM C 923, cast or fitted into manhole walls, for each pipe connection. Neoprene rubber shall meet ASTM C 443 and have a minimum thickness of 3/8 inch. Pipe clamps shall be of corrosion-resistant steel. Pipe connectors shall be one of the following:
   a. Flexible neoprene rubber boot securely clamped into a core-drilled pipe port. Pipe ports shall be core-drilled at the point of manhole manufacture and shall be accurately located within ½ inch of proposed sewer centerline.
   b. Self-adjusting mechanical pipe to manhole seal providing resilient flexible and infiltration-proof joint.
   c. Flexible rubber wedge firmly secured against a rubber gasket cast into the manhole.
   d. Engineer approved equal.
9. Steps: ASTM C 478 injection molded copolymer, polypropylene, encapsulating a ½ inch grade 60 steel reinforcing bar with an impact resistance of 300 ft-lbs and a pull out force resistance of 1500 lbs; Cast or anchor steps into sidewalls at 15-inch intervals. Step depth shall a minimum of 6 inches.

10. Grade Rings: 2-inch Reinforced-concrete rings, 2-inch minimum and 6-inch maximum height, with diameter matching manhole frame and cover. Install all MH's with grade rings to accommodate future adjustment in elevation.
11. Flow Channel: Construct flow channel the full diameter of the incoming and outgoing pipe with class A concrete.
12. Aggregate Base: Structure shall be placed on a minimum of 4 inches of 21AA limestone bedding.
13. Ground water monitor: In areas where ground water is known to exist and sewer is to be air tested, the Contractor shall install a ½ inch diameter, 10-inch-long pipe nipple through the manhole wall above one of the sewer lines entering the manhole. The pipe nipple shall be capped for use in air testing.

B. Manhole Frames and Covers:

1. Description: East Jordan Company, 1040-WT heavy duty or Engineer approved equal. Include indented top design with lettering cast into cover, using wording equivalent to "SANITARY SEWER."
2. Material: ASTM A 48, Class No. 30, gray iron unless otherwise indicated.

2.4 CONCRETE

A. General: Cast-in-place concrete complying with ACI 318 and the following:

1. Cement: ASTM C 150, Type II.
2. Fine Aggregate: ASTM C 33, sand.
3. Coarse Aggregate: ASTM C 33, crushed gravel.
4. Water: Potable.

B. Portland Cement Design Mix: The following are the grades of concrete recognized for use with sanitary sewers:

1. Class A concrete.
    a. 564 lbs cement (6 sacks) per cubic yard of concrete.
    b. Minimum 28-day compressive strength of 3,500 psi, conforming to MDOT Sec 7.01, Grade 35P.
    c. Air content shall be between 5-7%
    d. Water-cement ratio may not exceed 0.45 for air entrained concrete and 0.50 for non-air entrained concrete.
2. Class X concrete.
    a. 282 lbs cement (3 sacks) per cubic yard of concrete.
    b. Minimum 28-day compressive strength of 1,000 psi.

C. Cement mortar shall consist of one-part Type II Portland cement, two parts fine aggregate, and sufficient water to produce a workable mix.

D. Steel Reinforcement

1. Reinforcing Fabric: ASTM A 185/A 185M, steel, welded wire fabric, plain.

2. Reinforcing Bars: ASTM A 615/A 615M, Grade 60 (420 MPa) deformed steel.

E. Manhole Channels and Benches: Factory or field formed from concrete. Portland cement design mix, 4000 psi minimum, with 0.45 maximum water/cementitious materials ratio. Include channels and benches in manholes.

1. Channels: Concrete invert, formed to same width as connected piping, with height of vertical sides to three-fourths of pipe diameter. Form curved channels with smooth, uniform radius and slope.

a. Invert Slope: 1 percent minimum through manhole.

2. Benches: Concrete, sloped to drain into channel.

a. Slope: 8 percent.

PART 3 - EXECUTION

3.1 EARTHWORK

A. Excavating, trenching, and backfilling are specified in Section 312000 "Earth Moving."

3.2 PIPING INSTALLATION

A. General Locations and Arrangements: Drawing plans and details indicate general location and arrangement of underground sanitary sewer piping. Location and arrangement of piping layout take into account design considerations. Install piping as indicated, to extent practical. Where specific installation is not indicated, follow piping manufacturer's written instructions.

B. Install piping beginning at low point, true to grades and alignment indicated with unbroken continuity of invert. Place bell ends of piping facing upstream. Install gaskets, seals, sleeves, and couplings according to manufacturer's written instructions for using lubricants, cements, and other installation requirements.

C. Install manholes for changes in direction unless fittings are indicated. Use fittings for branch connections unless direct tap into existing sewer is indicated.

D. Install proper size increasers, reducers, and couplings where different sizes or materials of pipes and fittings are connected. Reducing size of piping in direction of flow is prohibited.

E. Install gravity-flow, non-pressure, drainage piping according to the following:

Revise first subparagraphs below to suit Project.

1. Install piping pitched down in direction of flow, at the slope indicated on the drawings. Each pipe, as laid, shall be checked by the Contractor. A variation of ¼ inch from plan grade will be deemed sufficient reason to reject the work and require Contractor re-lay the pipe, at no cost to the Owner.

2. Install piping with 5-foot minimum cover or depth as indicated on the drawings.
3. Install ductile-iron, gravity sewer piping according to ASTM A 746.
4. Install PVC sewer piping according to ASTM D 2321 and ASTM F 1668.

F. Install force-main, pressure piping according to the following: Retain paragraph if force main work.

1. Install piping with restrained joints at tee fittings and at horizontal and vertical changes in direction. Use corrosion-resistant rods, pipe or fitting manufacturer's proprietary restraint system, or cast-in-place-concrete supports or anchors.
2. Install piping with 5-foot minimum cover or as indicated on the drawings.
3. Install ductile-iron pressure piping according to AWWA C600 or AWWA M41.
4. Install ductile-iron special fittings according to AWWA C600.

G. Maintain dry trench during sewer and manhole construction by pumping, as necessary.

H. Clear interior of piping and manholes of dirt and superfluous material as work progresses. Maintain swab or drag in piping, and pull past each joint as it is completed. Place plug in end of incomplete piping at end of day and when work stops.

3.3 MANHOLE INSTALLATION

A. General: Install manholes complete with appurtenances and accessories indicated.

B. Install precast concrete manhole sections with sealants according to ASTM C 891.

C. Install FRP manholes according to manufacturer's written instructions.

D. Form continuous concrete channels and benches between inlets and outlet.

E. Set tops of frames and covers flush with finished surface of manholes that occur in pavements. Set tops 3 inches above finished surface elsewhere unless otherwise indicated.

Retain paragraph below only if specified in "Manholes" Article.

F. Install manhole-cover inserts in frame and immediately below cover.

G. Manholes shall be placed at every change in grade, direction and pipe size as well as at junctions of sewers.

H. All sewer connections, outside of sewer service leads, shall occur at a manhole.

I. Install outside drop manhole connections whenever a sewer enters a manhole at an invert elevation of more than 24 inches above the manhole invert elevation. Outside drop connections shall be sized at least one half the size of the incoming sewer or next larger size, but in no cases not less than 8 inches in diameter. The City of Ann Arbor does not permit inside drop connections.

J. Place cast-in-place concrete according to ACI 318.

3.4 CLEANOUT INSTALLATION

A. Install cleanouts and riser extensions from sewer pipes to cleanouts at grade. Install piping so cleanouts open in direction of flow in sewer pipe.

B. Set cleanout frames and covers in earth 3 inches above surrounding grade. If in pavement, set cleanout frames and covers at pavement elevation.

3.5 CONNECTIONS

A. Make connections to existing piping and underground manholes.

1. All connections, unless specifically noted otherwise, shall occur at a manhole. Use commercially manufactured wye fittings for piping branch connections. Remove section of existing pipe, install wye fitting into existing piping, and encase entire wye fitting plus 6-inch overlap with not less than 6 inches of concrete with 28-day compressive strength of 3000 psi.
2. Make branch connections from side into existing piping. Remove section of existing pipe, install wye fitting into existing piping, and encase entire wye with not less than 6 inches of concrete with 28-day compressive strength of 3000 psi.
3. Make branch connections from side into existing piping, NPS 21 or larger, or to underground manholes by cutting opening into existing unit large enough to allow 3 inches of concrete to be packed around entering connection. Cut end of connection pipe passing through pipe or structure wall to conform to shape of and be flush with inside wall unless otherwise indicated. On outside of pipe or manhole wall, encase entering connection in 6 inches of concrete for minimum length of 12 inches to provide additional support of collar from connection to undisturbed ground.

    a. Use concrete that will attain a minimum 28-day compressive strength of 3000 psi unless otherwise indicated.
    b. Use epoxy-bonding compound as interface between new and existing concrete and piping materials.

4. Protect existing piping and manholes to prevent concrete or debris from entering while making tap connections. Remove debris or other extraneous material that may accumulate.

3.6 CLOSING ABANDONED SANITARY SEWER SYSTEMS

A. Abandoned Piping: Close open ends of abandoned underground piping indicated to remain in place. Include closures strong enough to

withstand hydrostatic and earth pressures that may result after ends of abandoned piping have been closed. Use either procedure below:

1. Close open ends of piping with at least 8-inch thick, brick masonry bulkheads.
2. Close open ends of piping with threaded metal caps, plastic plugs, or other acceptable methods suitable for size and type of material being closed. Do not use wood plugs.

B. Abandoned Manholes: Excavate around manhole as required and use either procedure below:

1. Remove manhole and close open ends of remaining piping.
2. Remove top of manhole down to at least 36 inches below final grade. Break the bottom of the manhole. Fill with class II sand up to roadway cross section or 4 inches where outside of pavement influence. Fill the remainder with the typical or required roadway section where in the roadway and with 4 inches of top soil and seed where outside of the pavement influence.

C. Backfill to grade according to Section 312000 "Earth Moving."

3.7 IDENTIFICATION

A. Comply with requirements in Section 31200 "Earth Moving" for underground utility identification devices. Arrange for installation of green warning tapes directly over piping and at outside edges of underground manholes.

1. Use detectable warning tape over ferrous piping.
2. Use detectable warning tape over nonferrous piping and over edges of underground manholes.
3. All sanitary sewer shall be locatable. User tracer wire if

3.8 FIELD QUALITY CONTROL

A. All sanitary sewers, including leads, 36 inches and smaller shall be air tested by the Contractor, documented by the Contractor provided to the Owner, and witnessed by Owner's representative. (Required by U-M) All sanitary sewers greater than 36 inches shall be infiltration or exfiltration tested by the Contractor, documented by the Contractor provided to Owner, and witnessed by authority having jurisdiction. The authority having jurisdiction will decide whether infiltration or exfiltration testing is performed based upon ground water conditions.

All sewers, except 4-inch and 6-inch leads, shall be television inspected by the Contractor. Television inspection shall follow current MDOT procedures. (Required by U-M)

All PVC sanitary sewer main shall be mandrel tested (Required by U-M).

1. Submit separate report for each system inspection.
2. Defects requiring correction include the following:

a. Alignment: Less than full diameter of inside of pipe is visible between structures.
b. Deflection: Flexible piping with deflection that prevents passage of ball or cylinder of size not less than 92.5 percent of piping diameter.
c. Damage: Crushed, broken, cracked, or otherwise damaged piping.
d. Infiltration: Water leakage into piping.
e. Exfiltration: Water leakage from or around piping.

3. Replace defective piping using new materials, and repeat inspections until defects are within allowances specified.

4. Reinspect and repeat procedure until results are satisfactory.

B. Mandrel Test: Test sanitary sewerage according to the requirements of the following:

1. Mandrel shall be commercially produced, nine fin mandrel with the following labelled on the mandrel:
   a. Pipe diameter intended for.
   b. Percent deflection accounted for.
   c. ASTM or AASHTO standard stamp.
2. Mandrel test shall take place a minimum of 30 days after installation of the sewer.
3. Mandrel shall be pulled from manhole to manhole for each section of pipe installed.
   a. Passing freely through each section of pipe shall indicate a satisfactory result.
   b. Failure to freely pass through any section of pipe will require that section be exposed, examined and corrective actions taken, as necessary.
4. The mandrel shall meet the following schedule of sizing:

Pipe I.D.	PVC Mandrel O.D.
8”	7.28”
10”	9.08”
12”	10.79”
15”	13.20”
18”	N/A
24”	N/A

5. Air Tests: Test sanitary sewerage according to requirements of authorities having jurisdiction, UNI-B-6, and the following:

   a. Ground water level shall be determined by removing the cap from the previously installed pipe nipple, blowing air through the pipe into the ground, connecting a clear plastic tube to the pipe. The tube should be vertical and a measurement of the height in feet of water above the pipe centerline shall be taken. The height in feet shall be divided by 2.3I to establish the pressure (in psig) that will be considered to be the average ground water back pressure.

b. The following is the sequence and time requirements for air testing:

1) Each end of the pipe shall be plugged with pneumatic plugs capable of holding line pressure. There shall be three hose connections to the pneumatic plug with one being used for inflation, one used for continuously reading the air pressure in the line, and the third used for introducing low pressure air into the sealed line.

2) Low pressure will be introduced into the sealed line until the internal air pressure reaches 4.0 psig greater than the average back pressure of any ground water pressure that may be above the pipe. At least two minutes shall be allowed for the air pressure to stabilize. After the stabilization period, the pressurization hose shall be disconnected to prevent air from entering or escaping from the line. There shall be a pressure gauge for reading the internal pressure of the line being tested. The gauge shall be capable of showing pressure as low as 0 psig up to no greater than 20 psig. In the 0-10 psig range the gauge shall be both calibrated and accurate to one-tenth of one pound. The 0-10 psig portion of the gauge dial shall cover at least one-half of the complete dial range. This gauge shall have a tee fitting to allow simultaneous pressure reading by Owner gauge.

3) The time requirement for the pressure to decrease from 3.5 to 2.5 psig (greater than the average back pressure of any ground water that may be over the pipe) shall not be less than the time given in the following table:

Pipe (Inches)	PVC & DIP SEWERS	
	Holding Time (Seconds)	Minimum Holding Time (min:sec)
4	0.380 x L	3:46
6	0.854 x L	5:40
8	1.520 x L	7:34
10	2.374 x L	9:26
12	3.418 x L	11:20
15	5.342 x L	14:10
18	7.692 x L	17:00
21	10.470 x L	19:50
24	13.674 x L	22:40
30	21.366 x L	28:20
36	30.768 x L	34:00

6. Infiltration Test, if required: Contractor shall test infiltration in all sewers larger than 36 inch or as required by the Authority Having Jurisdiction.

a. Temporary weirs shall be placed, within manholes, at either ends of the sewer being tested. Test shall not exceed 1,200 feet.

1) Allowable infiltration shall not be more than 200 gallons per inch of pipe diameter per mile of sewer per 24 hours, including manholes.
2) If allowable limit of infiltration is exceeded on any test section, the Contractor shall reconstruct or repair the defective portion of the sewer and re-test.

3) Visible leaks shall be repaired regardless the results of the infiltration test.

7. Exfiltration Test, if required: Contractor test either exfiltration or infiltration in all sewers larger than 36 inches or as required by the Authority having jurisdiction.

a. Standpipe method will be used from manhole to manhole for each length of pipe.
1) Hydrostatic head of 10 feet to the sewer's average centerline elevation will be required with adjustments for external submergence due to water in the trench.
2) Owner will establish time durations and procedures for each test.
3) Maximum allowable exfiltration rate will be 200 gallons per inch of pipe diameter per mile of sewer per 24 hours including manholes.

4) Contractor shall pump all water out of the downstream manhole to a storm sewer at the completion of the test.

8. Television Inspection: Contractor shall perform a preliminary television inspection prior to acceptance of sewers and prior to any building connection being made.

a. All sewer lines shall be thoroughly cleaned prior to television inspection.
b. Inverts of sewer shall be wetted by pouring clean water in the upstream manhole until it appears in the downstream manhole.
c. The camera shall be connected to a video monitor and recorder.
d. The camera shall pass from manhole to manhole of each pipe section installed.
e. Television inspection deemed satisfactory if no visible defects, including but not limited to, dips or low spots, high spots, errors in horizontal or vertical alignment, joint offsets, leaks, cracks, or debris are present.

C. Any defects in the sewer shall constitute repairs be made.

D. Replace leaking piping using new materials, and repeat testing until leakage is within allowances specified.

3.9 CLEANING

A. Clean dirt and superfluous material from interior of piping.

END OF SECTION 221313

FACILITIES & OPERATIONS
ARCHITECTURE, ENGINEERING AND CONSTRUCTION
UNIVERSITY OF MICHIGAN

BuildingName
The Description of the Project
P00000000 0000

SPECIFICATION DIVISION 33

NUMBER SECTION DESCRIPTION

DIVISION 33 UTILITIES

SECTION 334100 - STORM UTILITY DRAINAGE

END OF CONTENTS TABLE

DIVISION 33 UTILITIES
SECTION 334100 - STORM UTILITY DRAINAGE

PART 1 - GENERAL

1.1 RELATED DOCUMENTS

A. Drawings and general provisions of the Contract, including General and Supplementary Conditions and Division 01 Specification Sections, apply to this Section.

1.2 SUMMARY

A. Section consists of exterior storm sewer piping and includes:
   1. Pipe and fittings.
   2. Backwater valves
   3. Cleanouts
   4. Manholes and catch basins.
   5. Channel
   6. Pipe outlets.

1.3 DEFINITIONS

A. ACI: American Concrete Institute.

B. ANSI: American National Standards Institute.

C. ASTM: American Society of Testing and Materials.

D. AASHTO: American Association of State and Highway Transportation Officials.

E. MDOT: Michigan Department of Transportation.

F. OSHA: Occupational Safety and Health Administration.

G. PSI: Pounds per Square Inch.

H. SDR: Standard Dimension Ratio.

I. U-M: University of Michigan.

1.4 ACTION SUBMITTALS

A. Product Data: For each type of product indicated.

B. Shop Drawings:

1. Manholes: base sections, riser sections, eccentric and concentric conical top sections, flat slab tops, grade rings with notarized certificating indicating compliance with ASTM C478.
2. [**Catch basins**] [**storm water inlets**] [**and**] [**dry wells**]. Include plans, elevations, sections, details, frames, covers, and grates.
3. Storm Water Detention Structures: Include plans, elevations, sections, details, inlet and outletelevations, structures, design calculations, material certifications.
4. Storm water management structures and systems, including but not limited to water quality units, infiltration structures
5. Pipe connections to manholes, catchbasins, structures.
6. Manhole frame and cover and catch basin frame and grate with notarized certificate indicating compliance with the specified ASTM standard and Class designation
7. Adjustable weir plates and fasteners.

C. Manufacturer Certification: All pipe furnished shall be accompanied by the manufacturer's certification.

D. Manufacturer's Performance Certification that shows hydrodynamic separator unit is capable of achieving the specified removal efficiencies per plan and specs.

E. Cut sheets for Contractor layout and staking locations.

1.5 INFORMATIONAL SUBMITTALS

A. Field quality-control reports.

B. Storm water management – site specific feature installation checklists, signed and approved by the engineer/Owner site representative

1.6 DELIVERY, STORAGE, AND HANDLING

A. Do not store plastic manholes, pipe, and fittings in direct sunlight.

B. Protect pipe, pipe fittings, and seals from dirt and damage.

C. Handle manholes according to manufacturer's written rigging instructions.

D. Handle [**catch basins**] [**and**] [**storm water inlets**] according to manufacturer's written rigging instructions.

1.7 PROJECT CONDITIONS

A. Interruption of Existing Storm Drainage Service: Do not interrupt service to facilities occupied by Owner or others unless permitted under the following conditions and then only after arranging to provide temporary service according to requirements indicated:

1. Notify [**Construction Manager**] [**Owner**] no fewer than [**two**] <**Insert number**> days in advance of proposed interruption of service.
2. Do not proceed with interruption of service without [**Construction Manager's**] [**Owner's**] written permission.

PART 2 - PRODUCTS

2.1 STEEL PIPE AND FITTINGS

A. Corrugated-Steel Pipe and Fittings: ASTM A 760/A 760M, Type I with fittings of similar form and construction as pipe.

1. Special-Joint Bands: Corrugated steel with O-ring seals.
2. Standard-Joint Bands: Corrugated steel.
3. Coating: [**Aluminum**] [**Zinc**].

2.2 HDPE PIPE AND FITTINGS

A. Storm sewer specified as high density polyethylene (HDPE) shall meet the requirements of AASHTO M294.

B. The pipe hall be corrugated with an integrally formed smooth interior. Joints shall be gasketed water tight joints using water tight sleeves. Sleeves shall be factory installed on one end of the pipe with a factory installed gasket on the opposite end of the pipe.

2.3 CONCRETE PIPE AND FITTINGS

A. Reinforced-Concrete Sewer Pipe and Fittings: ASTM C 76, [Class II-] [Class VI.

1. Integral bell-and-spigot ends and gasketed joints with ASTM C 443, rubber O-ring gaskets.

2. Elliptical pipe shall conform to ASTM C 507.

3. Cement shall conform to ASTM C 150 for types I and II.

4. Outside joints shall be provided with cement mortar collar. Inside joints of sewers larger than 36 inches in diameter shall also have the inside joint pointed with mortar.

5. Lubricants used in joints shall be supplied by the pipe manufacturer and joints shall be coupled in accordance with the manufacturer’s requirements.

6. The following information shall be clearly marked on each length of pipe:
   a. The pipe designation and class.
   b. The name or trademark of the manufacturer.

c. Identification of the manufacturing plant.
d. The date of manufacture.
e. Testing lot number or testing lab stamp.
f. Reinforced concrete pipe with elliptical reinforcement shall be clearly marked on the inside and the outside opposite walls along the minor axes of the elliptical reinforcing.

2.4 BACKWATER VALVES

1. Manufacturers: Subject to compliance with requirements, [**provide products by one of the following**] [**available manufacturers offering products that may be incorporated into the Work include, but are not limited to, the following**]:

2.5 CLEANOUTS

A. Cleanouts:

1. Manufacturers: Subject to compliance with requirements, [**provide products by one of the following**] [**available manufacturers offering products that may be incorporated into the Work include, but are not limited to, the following**]:
2. Product: Subject to compliance with requirements, provide [**product indicated on Drawings**] <**Insert manufacturer's name; product name or designation**> or comparable product by one of the following:
   a.
   b. <**Insert manufacturer's name**>.
3. Casting: Neenah R-7506-D, EJCO 1574 or Engineer approved equal. Casting shall be stamped with "Storm".

2.6 **MANHOLES AND CATCH BASINS** Standard Precast Concrete Manholes:

1. Description: ASTM C 478, precast, reinforced concrete, of depth indicated, with provision for sealant joints.
2. Diameter: 48 inches minimum unless otherwise indicated.
3. Ballast: Increase thickness of precast concrete sections or add concrete to base section as required to prevent flotation.
4. Base Section: 8-inch minimum thickness for floor slab and 4-inch minimum thickness for walls and base riser section, and separate base slab or base section with integral floor.
5. Riser Sections: 4-inch minimum thickness, and lengths to provide depth indicated.
6. Top Section: Eccentric-cone type unless concentric-cone or flat-slab-top type is indicated, and top of cone of size that matches grade rings.
7. Joint Sealant: ASTM C 443, rubber O-ring gasket, joints pointed with mortar after installation both inside and outside of the manhole.
8. Resilient Pipe Connectors: ASTM C 923, cast or fitted into manhole walls, for each pipe connection. Neoprene rubber shall

meet ASTM C 443 and have a minimum thickness of 3/8 inch. Pipe clamps shall be of corrosion-resistant steel. Pipe connectors shall be one of the following:

a. Flexible neoprene rubber boot securely clamped into a core-drilled pipe port. Pipe ports shall be core-drilled at the point of manhole manufacture and shall be accurately located within ½ inch of proposed sewer centerline.
b. Self-adjusting mechanical pipe to manhole seal providing resilient flexible and infiltration-proof joint.
c. Flexible rubber wedge firmly secured against a rubber gasket cast into the manhole.
d. Engineer approved equal.

9. Steps: ASTM C 478 injection molded copolymer, polypropylene, encapsulating a ½ inch grade 60 steel reinforcing bar with an impact resistance of 300 ft-lbs and a pull out force resistance of 1500 lbs; cast or anchor steps into sidewalls at 15-inch intervals. Step depth shall be a minimum of 6 inches.
10. Cut pipe so that it does not extend more than 2” into the manhole and patch water tight inside and outside of pipe insert location.
11. Grade Rings: 2-inch reinforced concrete rings or ASTM C 55 grade N-I concrete bricks, 2-inch minimum and 6-inch maximum height, with diameter matching manhole frame and cover. Interior and exterior of the grade rings and brick shall be pointed with mortar to seal the joints.
12. Aggregate Base: Structure shall be placed on a minimum of 6 inches of 21AA stone bedding.

B. Manhole Frames and Covers:

1. Description: Include indented top design with lettering cast into cover, using wording equivalent to "STORM SEWER” and cast environmental message “DUMP NO WASTE, DRAINS TO WATERWAYS” Use the following manufacturers and models for each structure type:

a. Storm Manhole
    1) Frame
        a) NEENAH NF-16422310 HS-25 loading
        b) East Jordan Company, EJCO heavy duty frame for 1040 cover, minimum HS20 loading
    2) Solid Cover
        a) Neenah, R-1642T474, no vent holes, enviro notice
        b) East Jordan Company, EJCO 1040, Type A1, enviro notice
    3) ADA compliant grate
        a) Neenah NF-23703010, Type "Q" grate, enviro notice
        b) East Jordan Company, EJCO 1040 type M3, enviro notice
    4) Grate, Non ADA compliant
        a) Neenah, NF-23703005 Type “Q” grate, enviro notice
        b) East Jordan Company, EJCO 1040 Type M2, enviro notice
    5) Beehive
        a) Neenah, NF-25610011 beehive grate, enviro notice
        b) East Jordan Company, EJCO 1040, Type 02, enviro notice
b. Storm Catch Basin

1) 7210, Type M1 grate by East Jordan Company, enviro message
2) R-3281-A, Type C grate by Neenah, enviro message.
3) Or Engineer approved equal.

2. Material: ASTM A 48, Class No. 30, gray iron unless otherwise indicated.

2.7 CHANNEL

A. General: Cast-in-place concrete according to ACI 318 and the following:

1. Cement: ASTM C 150, Type II.
2. Fine Aggregate: ASTM C 33, sand.
3. Coarse Aggregate: ASTM C 33, crushed gravel.
4. Water: Potable.

B. Manhole Channels and Benches: Factory or field formed from concrete. Portland cement design mix, 4000 psi minimum, with 0.45 maximum water/cementitious materials ratio. Include channels and benches in manholes.

1. Channels: Concrete invert, formed to same width as connected piping, with height of vertical sides to three-fourths of pipe diameter. Form curved channels with smooth, uniform radius and slope.

a. Invert Slope: 1 percent through manhole.

C. Ballast and Pipe Supports: Portland cement design mix, 4000 psi minimum, with 0.58 maximum water/cementitious materials ratio.

1. Reinforcing Bars: ASTM A 615/A 615M, Grade 60 (420 MPa) deformed steel.

2.8 PIPE OUTLETS

A. Head Walls: Cast-in-place reinforced concrete, with apron and tapered sides.

Riprap Basins: Broken, irregularly sized and shaped, graded stone according to Design detail, or large limestone or river rock boulders. Crushed concrete will not be accepted for rip rap. **EXECUTION**

3.1 EARTHWORK

A. Excavation, trenching, and backfilling are specified in Section 312000 "Earth Moving."

3.2 PIPING INSTALLATION

A. General Locations and Arrangements: Drawing plans and details indicate general location and arrangement of underground storm drainage piping. Location and arrangement of piping layout take into account design considerations. Install piping as indicated, to extent practical. Where specific installation is not indicated, follow piping manufacturer's written instructions.

B. Install piping beginning at low point, true to grades and alignment indicated with unbroken continuity of invert. Place bell ends of piping facing upstream. Install gaskets, seals, sleeves, and couplings according to manufacturer's written instructions for use of lubricants, cements, and other installation requirements.

C. Install manholes for changes in direction and grade.

D. Install proper size increasers, reducers, and couplings where different sizes or materials of pipes and fittings are connected. Reducing size of piping in direction of flow is prohibited unless deliberate storm water management design.

E. Install gravity-flow, nonpressure drainage piping according to the following:

1. Install piping pitched down in direction of flow.
2. Install piping with manufacturer recommended minimum cover or as indicated on the drawings.
3. Install corrugated steel piping according to ASTM A 798/A 798M.
4. Install corrugated aluminum piping according to ASTM B 788/B 788M.
5. Install ABS sewer piping according to ASTM D 2321 and ASTM F 1668.
6. Install PVC sewer piping according to ASTM D 2321 and ASTM F 1668.
7. Install reinforced-concrete sewer piping according to ASTM C 1479 and ACPA's "Concrete Pipe Installation Manual."

3.3 PIPE JOINT CONSTRUCTION

A. Join gravity-flow, nonpressure drainage piping according to the following:
1. Join corrugated steel sewer piping according to ASTM A 798/A 798M.
2. Join corrugated aluminum sewer piping according to ASTM B 788/B 788M.
3. Join ABS sewer piping according to ASTM D 2321 and ASTM D 2751 for elastomeric-seal joints.
4. Join PVC cellular-core piping according to ASTM D 2321 and ASTM F 891 for solvent-cemented joints.
5. Join PVC sewer piping according to ASTM D 2321 and ASTM D 3034 for elastomeric-seal joints or ASTM D 3034 for elastomeric-gasketed joints.

6. Join reinforced-concrete sewer piping according to ACPA's "Concrete Pipe Installation Manual" for rubber-gasketed joints.
7. Join dissimilar pipe materials with nonpressure-type flexible couplings.

3.4 BACKWATER VALVE INSTALLATION

A. Install horizontal-type backwater valves in piping where indicated.

B. Install combination horizontal and manual gate-valve type in piping and in manholes where indicated.

C. Install terminal-type backwater valves on end of piping and in manholes where indicated.

3.5 CLEANOUT INSTALLATION

A. Install cleanouts and riser extensions from sewer pipes to cleanouts at grade. Use cast-iron soil pipe fittings in sewer pipes at branches for cleanouts and cast-iron soil pipe for riser extensions to cleanouts. Install piping so cleanouts open in direction of flow in sewer pipe.

B. Set cleanout frames and covers in earth in cast-in-place concrete block, 6" deep. Set with tops [**1 inch (25 mm)**] {flush}<**Insert dimension**> above surrounding earth grade.

C. Set cleanout frames and covers in concrete pavement and roads with tops flush with pavement surface.

3.6 MANHOLE AND CATCH BASIN INSTALLATION

A. General: Install manholes, complete with appurtenances and accessories indicated.

B. Install precast concrete manhole sections with sealants according to ASTM C 891.

C. Where specific manhole construction is not indicated, follow manhole manufacturer's written instructions.

D. Set tops of frames and covers flush with finished surface of manholes that occur in pavements. Set tops 3 inches above finished surface elsewhere unless otherwise indicated.

E. Manholes shall be placed at every change in grade, direction and pipe size as well as at junctions of sewers.

F. All sewer connections shall occur at a manhole.

G. Install aggregate base beneath structure prior to placement of structure.

3.7 CONCRETE PLACEMENT

A. Place cast-in-place concrete according to ACI 318.

3.8 CONNECTIONS

A. Connect nonpressure, gravity-flow drainage piping from building with cleanout outside of building.

B. Make connections to existing piping and underground manholes.
   1. Make connections to underground manholes and structures by cutting into existing unit and creating an opening large enough to allow 3 inches of concrete to be packed around entering connection. Cut end of connection pipe passing through pipe or structure wall to conform to shape of and be flush with inside wall unless otherwise indicated. On outside of pipe, manhole, or structure wall, encase entering connection in 6 inches of concrete for minimum length of 12 inches to provide additional support of collar from connection to undisturbed ground.

      a. Use concrete that will attain a minimum 28-day compressive strength of 3000 psi unless otherwise indicated.
      b. Use epoxy-bonding compound as interface between new and existing concrete and piping materials.

   2. Protect existing piping, manholes, and structures to prevent concrete or debris from entering while making tap connections. Remove debris or other extraneous material that may accumulate.

   3. Use nonpressure-type flexible couplings where required to join gravity-flow, nonpressure sewer piping unless otherwise indicated.

      a. [**Unshielded**] [**Shielded**] flexible couplings for same or minor difference OD pipes.
      b. Unshielded, increaser/reducer-pattern, flexible couplings for pipes with different OD.
      c. Ring-type flexible couplings for piping of different sizes where annular space between smaller piping's OD and larger piping's ID permits installation.

3.9 Riprap

A. Follow the details and MDOT guidelines for riprap installation, including a minimum depth of 16” or whichever is more stringent.
B. Provide geotextile liner under the riprap with seams overlapped a minimum of two feet and ends staked.
C. Crushed concrete is not to be used as Riprap.

3.10 CLOSING ABANDONED STORM DRAINAGE SYSTEMS

A. Abandoned Piping: Close open ends of abandoned underground piping indicated to remain in place. Include closures strong enough to

withstand hydrostatic and earth pressures that may result after ends of abandoned piping have been closed. Use either procedure below:

1. Close open ends of piping with at least [**8-inch- (203-mm-)**] <**Insert dimension**> thick, brick masonry bulkheads or Grade S3 concrete.
2. Close open ends of piping with threaded metal caps, plastic plugs, or other acceptable methods suitable for size and type of material being closed. Do not use wood plugs.
3. Fill abandoned pipe with flowable fill

B. Abandoned Manholes and Structures: Excavate around manholes and structures as required and use one procedure below:

1. Remove entire abandoned structure unless noted to leave in place on the plans. Remove manhole or structure and close open ends of remaining piping.
2. If indicated to abandon structure in place, remove top of manhole or structure down to at least **36 inches** below final grade. Fill to within roadway cross section with class II sand. Fill remainder with the roadway or restoration cross section.

C. Backfill to grade according to Section 312000 "Earth Moving."

3.11 FIELD QUALITY CONTROL

A. Inspect interior of piping to determine whether line displacement or other damage has occurred. Inspect after approximately 24 inches of backfill is in place, and again at completion of Project.

1. Submit separate reports for each system inspection.
2. Defects requiring correction include the following:

    a. Alignment: Less than full diameter of inside of pipe is visible between structures.
    b. Deflection: Flexible piping with deflection that prevents passage of ball or cylinder of size not less than 92.5 percent of piping diameter.
    c. Damage: Crushed, broken, cracked, or otherwise damaged piping.
    d. Infiltration: Water leakage into piping.
    e. Exfiltration: Water leakage from or around piping.

3. Replace defective piping using new materials, and repeat inspections until defects are within allowances specified.
4. Re-inspect and repeat procedure until results are satisfactory.

B. Test new piping systems, and parts of existing systems that have been altered, extended, or repaired, for leaks and defects.

1. Do not enclose, cover, or put into service before inspection and approval.
2. Test completed piping systems according to requirements of authorities having jurisdiction.

3. Schedule tests and inspections by authorities having jurisdiction with at least 24 hours' advance notice.
4. Submit separate report for each test.
5. Gravity-Flow Storm Drainage Piping: Test according to requirements of authorities having jurisdiction, UNI-B-6, and the following:

    a. Exception: Piping with soil tight joints unless required by authorities having jurisdiction.

C. Mandrel Testing
1. All PVC and HDPE storm sewers shall be mandrel tested for deflection by the Contractor.
2. The mandrel shall be a commercially produced, nine fin mandrel, with the pipe diameter, percent deflection and applicable ASTM or ASHTO standard fins.
3. The testing is to take place after the sewers have been in place for a minimum of 30 days. Allow time for corrective action.
4. The mandrel shall be pulled from structure to structure. Any portion of the pipe through which the mandrel passes freely shall be deemed to have passed the mandrel test. Sections of pipe through which the mandrel does not pass freely shall be exposed and examined and corrected.
5. The mandrel is to be construction in accordance with the following table.

Pipe ID	HDPE Mandrel O.D.	SDR PVC Mandrel O.D.
8″	7.54″	7.28″
10″	9.41″	N/A
12″	11.54″	N/A
15″	14.27″	N/A
18″	17.24″	N/A
24″	23.18″	N/A

D. Television Inspection
1. Television inspection shall follow MDOT and City of Ann Arbor Requirements. Television inspection is not required for extensions of existing catch basin leads less than 20 feet. Allow time for corrective action.
2. All sewer lines shall be thoroughly cleaned prior to television inspection.
3. Television inspection shall consist of wetting the invert of the section by pouring clean water in the upstream manhole until it appears in the downstream manhole, and then, after the water has stopped flowing, passing a camera through the section.
4. The camera shall be connected to a monitor and video tape recorder. The tape shall indicate the date, the section tested and the actual distance from the beginning manhole to each tee or wye, and each visible defect. The tape shall be furnished to the Owner’s representative.

E. Sewer Repairs
1. If a sewer repair is required as a result of damaged during construction operations or fails mandrel or television inspection, the Contractor shall expose the sewer pipe and perform the required correction(s).

2. If the repair is required due to the pipe being out of alignment or off grade, the pipe shall be adjusted so as to be placed n proper alignment and grade. Dense graded aggregate material shall be carefully placed under the haunches of the realigned pipe and compacted by the use of a tee bar.
3. If the pipe cannot be satisfactorily realigned or an open joint reset; of if the pipe is cracked, broken, or permanently deflected, the affected pipe shall be removed and replaced with the same pipe material. The pipe to be removed is to be sawed on each side of the damaged section in a neat and workmanlike manner without damage to the adjacent pipe. The replacement pipe section shall fit flush to the remaining pipe at each end. These sawed joints shall be coupled using a Fernco flexible coupling and stainless steel ring. These joints shall be encased to the pipe centerline with concrete one foot on either side of the flexible coupling.

3.12 CLEANING

A. Clean interior of piping of dirt and superfluous materials. Flush with water.

3.13 STORM WATER MANAGEMENT CHECKLISTS

A. Storm water management construction and observation checklists for project specific items are to be completed by the contractor throughout the construction process, observed by the engineer of record, and provided to the Owner/Construction Manager.

B. Storm water management check lists
1. Permeable pavement
2. Bioretention
3. Infiltration basin
4. Infiltration trench

Permeable pavement construction & observation checklist			
Project:			
Location:			
Contractor			
Engineer			
Construction Sequence	**Contractor initial/date**	**Engineer initial/date for completion & compliance**	**Comments**
1. Pre-Construction			
Pre-construction meeting			
Runoff diverted			
Soil permeability verified			
Groundwater elevation verified (if within 3 feet of infiltration elevation)			
Project benchmark established			
Pavement location staked out and roped off			
Temporary erosion and sediment control established			
2. Excavation			
Size and location per plans			
Side slopes stable			
Verify with engineer regarding any soil layer depth adjustments required due to encountered vs. specified soil type and permeability			
Stockpile location not adjacent to excavation area and stabilized with vegetation and/ or silt fence			
3. Geotextile			
Fabric Meets specifications			
Sedimentation/silt is removed from area prior to placement of geotextile			

SESC measures are maintained to avoid sedimentation/silt getting into permeable pavement area			
Placement and downslope overlap (typically 2') conform to specifications and drawings			
Sides of excavation covered with geotextile			
No tears or holes			
Minimal wrinkles, pulled taught and staked			
4. Drain pipe/Overflow drain pipe			
Size, perforations, locations, slope, and outfalls meet specifications and drawings			
Elevation of overflow pipes correct			
Cleanouts installed per plan			
Pipe ends are protected from sediment until connected to outlet			
Interior of pipe clean and pipe tested			
5. Aggregate base course			
SESC measures are maintained to avoid sedimentation/silt permeable pavement area			
Submittal approved/sieve analysis meets specifications			
Arrives on site to meet approved material submittal, for example, no excessive fines, washed, etc.			
Laid or spread (not dumped) with a front - loader to avoid aggregate separation			

Thickness, placement, and compaction meet specifications and drawings			
6. Aggregate choke course			
SESC measures are maintained to avoid sedimentation/silt permeable pavement area			
Submittal approved/sieve analysis meets specifications			
Arrives on site to meet approved material submittal, for example, no excessive fines, washed, etc.			
Laid or spread (not dumped) with a front - loader to avoid aggregate separation			
Thickness, placement, and compaction meet specifications and drawings			
7. Edge Constraints			
Edge constraint curb elevation, placement, and materials meet specifications and drawings			
8. Porous concrete pavement			
SESC measures are maintained to avoid sedimentation/silt permeable pavement area			
Submittal approved			
pre-task meeting for porous concrete with certified installer			
Thickness, elevation and slope conforms to plans and specs			
9. Aggregate setting bed			

SESC measures are maintained to avoid sedimentation/silt permeable pavement area			
Submittal approved			
Thickness, elevation and slope conforms to plans and specs			
10. Permeable interlocking concrete pavers			
SESC measures are maintained to avoid sedimentation/silt permeable pavement area			
Submittal approved			
Meets ASTM standards, as applicable			
Elevations, slope, laying pattern, joint spacing, placement and compaction meet specifications			
11. Jointing sand			
SESC measures are maintained to avoid sedimentation/silt permeable pavement area			
Submittal approved			
Material, installation and compaction meets plans and specs			

Bioretention - construction & observation checklist			
Project:			
Location:			
Contractor			
Engineer:			
Construction Sequence	**Contractor initial/date**	**Engineer initial /date for completion and observed compliance**	**comments**
1. Pre-Construction			
Pre-construction meeting			
Runoff diverted			
Facility area cleared			
Soil tested for permeability			
Project benchmark near site			
Facility location staked and temporarily fenced to prevent traffic/storage compaction			
Temporary erosion and sediment protection properly installed			
2. Excavation			
Lateral slopes within design range and verified by field survey shots			
Soils not compacted during excavation			
Longitudinal slopes within design range and verified by field survey shots			
Stockpile location not adjacent to excavation area and stabilized with vegetation and/ or silt fence			
3. Structural Components			
Stone diaphragm installed per plans, with clean stone, and with approved submittals			
Outlets installed per plans with approved submittals			
Overflow drain pipe and cleanouts installed to grade and clean			
Pretreatment devices and inlets installed per plans with approved submittals			

Soil bed composition and texture conforms to plans and specifications			
Geotextile (if specified) conforms to plans and installed per specifications			
4. Vegetation and soil			
Complies with planting specs			
Topsoil submittals, including soil analysis, approved and meets plans/specs			
Topsoil arriving on site verified it complies with specs in composition and placement, for example, (allowable clay content not exceeded)			
Soil properly stabilized for permanent erosion control			
5. Final Inspection			
Dimensions per plans			
Pre-treatment operational			
Inlet/outlet operational			
Soil/ filter bed permeability verified			
Effective stand of vegetation stabilized			
Construction generated sediments removed			
Contributing watershed stabilized before flow is diverted to the practice			

Infiltration basin - system construction checklist			
Project:			
Location:			
Date:			
Contractor:			
Engineer:			
Construction Sequence	**Contractor initial/date**	**Engineer initial/date for completion and observed compliance**	**Comments**
1. Pre-Construction			
Pre-construction meeting			
Runoff diverted			
Soil permeability verified			
Groundwater elevation verified (if within 3 feet of infiltration elevation)			
Project benchmark established			
Facility location staked and temporarily fenced to prevent traffic/storage compaction			
Temporary erosion and sediment control established			
2. Excavation			
Size and location per plans			
Side slopes stable			
Depth adjusted to soil layer with specified soil type and permeabilityn			
Sub-soil not adjacent to excavation area and stabilized with vegetation and/ or silt fence			
Stockpile location not adjacent to excavation area and stabilized with vegetation and/ or silt fence			
Soil permeability verified at actual location and depth			
3. Embankment			

Verify by survey shots meets grade per plans			
Fill material per specifications			
4. Final Excavation			
Drainage area stabilized			
Sediment/silt removed from facility			
Basin floor tilled			
Facility stabilized			
Area per plans			
Initial depth = feet			
5. Final Inspection			
Pretreatment facility stabilized			
Contributing watershed stabilized prior to flow diversion			
Inlet and outlet operational and clean per plans and specs			

Infiltration trench - construction inspection checklist			
Project:			
Location:			
Date:			
Contractor:			
Engineer:			
Construction Sequence	**Contractor initial/date**	**Engineer initial/date for completion/compliance**	**comments**
1. Pre-Construction			
Pre-construction meeting			
Runoff diverted			
Soil permeability verified			
Groundwater / bedrock verified			
Project benchmark established			
Facility location staked out			
Temporary erosion and sediment control established			
2. Excavation			
Size and location per plans			
Side slopes stable			
Depth adjusted to soil layer with specified soil type and permeability			
Sub-soil not adjacent to excavation area and stabilized with vegetation and/ or silt fence			
Stockpile location not adjacent to excavation area and stabilized with vegetation and/ or silt fence			
3. Filter Fabric Placement			
Fabric per specifications			
Fabric per specifications			
Placed per plan location			
4. Aggregate Material			
Size as specified			
Clean / washed material			
Placed properly			
5. Observation Well			
Pipe size per plans			

Under-drain installed per plans			
Inlet installed per plans			
Pre-treatment devices installed per plans			
6. Vegetation			
Complies with planting specifications			
Topsoil complies with composition and placement in specifications			
Permanent erosion control measures in place			
7. Final Inspection			
Dimensions per plans			
Check dams operational			
Inlet / outlet operational			
Effective stand of vegetation and stabilization			
Contributing watershed stabilized before flow is routed to the facility			

END OF SECTION 334100

OUT TO BID

DESIGN GUIDELINES

1.0 CODES AND REGULATORY AGENCIES

2.0 PROJECT PROCEDURES

3.0 SUSTAINABILITY

4.0 SPECIAL INSTRUCTIONS TO DESIGNERS

5.0 SPECIAL BUILDING AREAS

6.0 TECHNICAL REQUIREMENTS

7.0 MASTER SPECIFICATIONS

8.0 PREFERRED MANUFACTURERS LIST

9.0 STANDARD DETAILS AND SCHEDULES

10.0 CHANGES TO DESIGN GUIDELINES

BUILDING COMMISSIONING

CONTRACTS & AGREEMENTS

8.0 PREFERRED MANUFACTURERS LIST

Preferred List of Manufacturers (PML) contains specific manufacturers that are acceptable for use on U of M projects This section is divided by CSI number. When the A/E uses U-M Master Specifications for a project, adding manufacturers from the PML as approved manufacturers in the specification is optional.

For University of Michigan Hospitals and Health Centers (UMHHC) funded projects, click here for a list of Preferred Manufacturers Lists specific to work at UMHHC.

Preferred Manufacturers List General Procedures

	Last Update	Replaces Document
8.1 Substitutions	February 2015	SID-E Substitutions
8.2 Architectural	August 2015	
8.3 Mechanical	October 2017	
8.4 Electrical	March 2017	
8.5 Site/Civil		

© 2018 Regents of the University of Michigan
Design by Michigan Creative

326 East Hoover, Ann Arbor, MI 48109-1002
Phone: (734) 763-3020
Contact Us

DESIGN GUIDELINE 8.1
SUBSTITUTIONS

(Formerly Owner's Option)

General

The University requires that specific vendor's products be used to assure job quality through reliability, ease of maintenance, manufacturers proven maintenance and warranty support, control of stock and value. This process is controlled by disallowing the Contractor from making substitutions for specified products. The Contractor is typically permitted to propose Owner's Options (voluntary alternates) at the time of bid only. It is unusual for the University to consider a substitution after bids have been awarded and during the construction phase.

Related Documents

Project Manual, Instructions to Bidders
Preferred Manufacturers List (PML)

Specifications

Include language explicitly prohibiting substitutions.

Do not use the phrase "or equal" after any specific vendor's product identification in the specification sections or on the drawings (including details).

For all specification sections that are included in the PML, restrict product selections to those manufacturers listed in the PML. Where none are listed, select manufacturers utilizing the criteria in the "General" paragraph of this document. The University encourages the largest number of PML listed manufacturers be included in the specification. However, if there are concerns with a particular manufacturer, it is not required they be included, provided a minimum of three are listed as approved in the specification. If it is believed manufacturers other than those listed in the PML should be considered, discuss this issue with the Design Manager prior to release of the construction documents.

DESIGN GUIDELINE 8.2
ARCHITECTURAL PREFERRED MANUFACTURERS LIST

General

This list is a compilation of products approved for use on University of Michigan projects. Where specific manufacturers or products are listed for a given building element, limit selection to the products listed. When, in your opinion, an unlisted product should be considered for inclusion in a project, consult with the Design Manager. Do not substitute this list for your professional judgment concerning appropriate products and materials.

Where specific products are not listed for a given building element (i.e. curtain walls), base the selection of manufacturers, types, styles, or models on your professional judgment. Wherever possible, select the products of at least 3 manufacturers. Avoid the use of open ended "or equal" statements.

This list is updated as needed.

Table of Contents

Section 075316	Chlorosulfonate-Polyethylene (CSPE) Roofing
Section 075323	Ethylene-Propylene-Diene-Monomer (EPDM) Roofing
Division 8	Aluminum Fluoropolymer Coatings
Section 084113	Aluminum Framed Entrances and Storefronts
Section 084413	Glazed Aluminum Curtain Wall
Section 085113	Aluminum Windows
Section 087100	Door Hardware
Section 088000	Glazing
Section 101100	Visual Display Units
Section 102113	Toilet Compartments
Section 102800	Toilet and Bath Accessories
Section 115313	Laboratory Fume Hoods
Section 123553	Laboratory Casework
Section 122000	Window Treatment
Section 132100	Controlled Environment Rooms

Preferred Manufacturers

Section 075316 - Chlorosulfonate-Polyethylene (CSPE) Roofing

- Carlisle SynTec Systems
- Stevens Roofing Systems, Dow Building Solutions.

Section 075323 - Ethylene-Propylene-Diene-Monomer (EPDM)

EPDM Systems:
- Carlisle SynTec Systems, Carlisle Corporation
- Firestone RubberGard EPDM Roofing Systems, Firestone Building Products Co.
- Genflex Roofing Systems, GenCorp. Polymer Products, Building Systems Div.
- Johns Manville Roofing Systems, Johns Manville Corp.
- Versiguard Roofing Systems, Versico Incorporated.

Division 8 (applies to sections 08410, 08520, 08911) - Aluminum Fluoropolymer Coatings

- PPG Industries.
- Valspar Corp.
- Akzo Nobel.

Section 084113 - Aluminum Framed Entrances and Storefronts

Entrances, Doors and Storefront Systems:
- EFCO Corp., a Pella company.
- Kawneer North America; an Alcoa company
- Oldcastle Building Envelope.
- Tubelite Company, Inc.
- Wausau Window and Wall Systems

Flush Panel FRP Doors (Doors only, not framing):
- Commercial Door Systems
- Kawneer North America; an Alcoa companyRebco, Inc.
- Special-Lite, Inc.

Section 084413 - Glazed Aluminum Curtain Wall
- EFCO, Corp.; a Pella company.
- Graham Architectural Products
- Harmon, Inc.
- Kawneer North America; an Alcoa company.
- Oldcastle Building Envelope.
- Wausau Window and Wall Systems.

Section 085113 - Aluminum Windows

Architectural Grade Windows (subject to availability of project-applicable products):
- Graham Architectural Products
- Kawneer North America; an Alcoa company.
- Wausau Window and Wall Systems.

Section 087100 - Door Hardware

Butt Hinges:

- Hager Companies
- Ives, Allegion
- McKinney Products Company
- Stanley

Continuous Geared Hinges:

- Hager Companies
- Ives, Allegion
- Pemko
- Select Products Limited

Locksets (mechanical and electrified):

- Corbin Russwin ML2200
- Sargent 8200 Series
- Schlage L Series

Electric Strike:

- Von Duprin 6000 Series
- HES 1006, 9400 and 9600 Series

Small Format Interchangeable Cores (SFIC):
In existing buildings, match existing core type for ease of keying.

- Best Access Systems
- Medeco Keymark
- Schlage Everest

Exit Devices (mechanical and electrified):

- Sargent
- Von Duprin

Digital Locks (Standalone battery operated, not connected to campus access control system):

- Schlage only
    - Keypad type (programmable at door without additional hardware/software): CO-100-MS-70-KP
    - Keypad type type (programmable at door with additional hardware/software): CO-200-MS-70-KP
    - Mag stripe card reader (programmable at door with additional hardware/software): CO-200-MS-70-MSK

Closers: specify arm specific closers; do not specify closers with multiple arms

- LCN 4000 Series only
- Sargent 281 Series with heavy duty arm

Overhead Holders and Stops:

- Concealed heavy duty type by any BHMA member

Local Exit Alarms (not connected to fire alarm or campus access control systems):

- Detex

Flush Bolts (Automatic, Constant Latching and Manual):

- Door Controls International (DCI)
- Ives
- Rockwood

Flatgoods: Any BHMA member

Weatherstripping /Thresholds: Any BHMA member

Concealed Power Transfer:

- Securitron
- Von Duprin

Section 088000 - Glazing

Primary Glass:

- AGC Flat Glass North America
- Guardian Industries Corp.
- Pilkington North America, Inc.
- PPG Industries, Inc.

Laminated Glass:

- AGC Flat Glass North America
- Guardian Industries Corp.
- Oldcastle Glass Group.
- Viracon, Inc.

Insulating Glass Units:

- AGC Flat Glass North America
- Guardian Industries Corp.
- Oldcastle Glass Group.
- Viracon, Inc.

Fire-Rated Glazing:

- AGC Glass Company. Pyrosafe
- Nippon Electric Glass Co., Ltd. Firelite
- Pilkington Group, Pyrostop.
- Vetrotech Saint-Gobain USA.

Section 102113 - Toilet Compartments

- All American Metal Corp.
- ASI/ Global Toilet Partitions
- Bradley Corporation; Mills Partitions.
- Flush-Metal Partitions LLC.

- Hadrian Manufacturing, Inc.

Section 102800 - Toilet and Bath Accessories

- American Specialties, Inc. (ASI).
- Bobrick Washroom Equipment, Inc.
- Bradley Corp.
- Elcoma Metal Fabricating (grab bars and shower seats only).
- Gamco, a division of Bobrick Washroom Equipment (except for shower seats and counter mounted soap dispensers).
- Koala Kare Products (baby changing stations only), a division of Bobrick Washroom Equipment.

Note: Toilet paper dispensers, paper towel dispensers (roll-type), and wall mounted soap dispensers are provided by UM, but installed by the Contractor. Coordinate with Design Manager.

Section 115313 - Laboratory Chemical Fume Hoods

Chemical Fume Hoods: All types except reduced face velocity
- Air Master Systems Corp.
- BMC Laboratory Cabinets & Fume Hoods
- Hamilton Scientific
- Kewaunee Scientific Corp.
- Labconco Corp.
- Mott Manufacturing Ltd.
- Lab Crafters, Inc.

Chemical Fume Hoods: Reduced face velocity
- Kewaunee Scientific Corp.; Supreme Air LV
- Lab Crafters, Inc.; Air Sentry
- Labconco Corp. ; Protector XStream

Base Cabinets for Fume Hoods: Refer to approved laboratory casework manufacturers list.

Section 123553 - Laboratory Casework

Metal Casework; associated distributers:
- Air Master Systems Corp.
- BMC Laboratory Cabinets & Fume Hoods,; RD Landstra Associates.

- Jamestown Metal Products; Farnell Contracting
- Kewaunee Scientific Equip. Corp.; Farnell Equipment Co.
- Laboratory Design & Supply, Inc.
- Mott Manufacturing, Ltd.; Detroit Technical Equipment Company

Flammable Storage: Produced in accordance with NFPA 30 and FM or UL labeled.

Wood Casework; associated distributers:
- Kewaunee Scientific Equip. Corp.; Farnell Equipment Co.
- Laboratory Design & Supply, Inc. (Flush overlay only; lipped overlay not available)
- Mid Canada Millwork
- Mott Manufacturing, Ltd.; Detroit Technical Equipment Company
- Conditional Approval: The following manufacturers are new to the PML and are approved for use on small projects (estimated casework cost less than $100,000):
    - CIFLab L-Line (lipped overlay) and E-line (full overlay); Stonecreek Interior Systems, LLC
    - Diversified Casework; RD Landstra Associates.
    - Wood-Metal Industries; Divisions of Wood-Mode; Farnell Contracting

Epoxy Resin Tops and Sinks:
- Kemresin (Kewaunee Scientific Corp.)
- Durcon, Inc.
- Epoxyn; Epoxyn Products

Stainless Steel Sinks and Tops:
- Elkay Co.
- Just Manufacturing

Fiberglass Sinks:
- Kreolab, Inc.

Shelf Standards and Brackets:
- Cooper B-Line, Inc.
- Flex-Strut, Inc.
- Kewaunee Scientific Equip. Corp.
- Nu-Strut framing channel system, Kumar Industries, Inc.
- Unistrut Corp.

Service Fittings:
- Chicago Faucets, a Geberit Company.
- T & S Brass and Bronze Works, Inc.

- Watersaver Faucet Company
- Wolverine Brass, Inc.

Section 122000 - Window Treatment

Review specific window treatment requirements with Design Manager. Small renovation projects will typically match established building standard. New buildings and major renovations will select window treatments based on performance requirements, including solar transmission and thermal properties.

Aluminum Horizontal Blinds
- Levolor Window Fashions
- Hunter Douglas
- Springs Window Fashions; Bali

Roller Shade Hardware:
- Springs Window Fashions; Bali
- Draper Inc.; Flexshade
- OpenLight
- MechoShade Systems, Inc.
- Roll Ease, Skyline Series
- SRF Enterprises, Inc.

Shade Fabric: Tested in accordance with NFPA 701.

Section 132100 – Controlled Environment Rooms

Environmental Rooms:
- Bahnson Environmental Specialties, an EMCOR company
- Environmental Growth Chambers
- Harris Environmental Systems, Inc.
- Insulated-Structures, Ltd.
- Nor-Lake, Inc.

DESIGN GUIDELINE 8.3
MECHANICAL PREFERRED MANUFACTURERS LIST

INDEX OF MECHANICAL SECTIONS:

SECTION 211313 - WET-PIPE SPRINKLER SYSTEMS (15300)
SECTION 213113 - FIRE PUMPS (15320)
SECTION 220000 - UNDERGROUND PIPING IN CONDUIT SYSTEM
SECTION 220500 - COMMON WORK RESULTS FOR MECHANICAL (15010)
SECTION 220513 – MOTORS (15170)
SECTION 220514 - VARIABLE FREQUENCY DRIVES (15960)
SECTION 220516 - PIPE EXPANSION JOINTS (15125)
SECTION 220519 - THERMOMETERS, PRESURE GAUGES & ACC'S (15130)
SECTION 220523 – VALVES (15100)
SECTION 220533 - HEAT TRACING FOR PIPING (15128)
SECTION 220548 - VIBRATION CONTROL (15240)
SECTION 220553 - MECHANICAL IDENTIFICATIONS (15190)
SECTION 220719 - MECHANICAL SYSTEMS INSULATION (15250)
SECTION 221113 - PIPING MATERIALS & METHODS (15060)
SECTION 221119 - DOMESTIC WATER PIPING SPECIALITIES (15411)
SECTION 221319 - DRAINAGE SPECIALITIES (15420)
SECTION 221500 - COMPRESSED AIR ACCESSORIES (15481)
SECTION 223116 - WATER SOFTENER (15455)
SECTION 224200 - PLUMBING FIXTURES (15440)
SECTION 230000 - AIR COOLED CONDENSING UNITS
SECTION 230000 - AIR COOLED PACKAGED CHILLERS
SECTION 230000 - DUCTLESS SPLIT ROOM AIR CONDITIONERS- AIR COOL
SECTION 230000 - HEAT EXCHANGERS & CONVERTERS
SECTION 230000 - HUMIDIFIERS
SECTION 230000 - HVAC WATER TREATMENT
SECTION 230000 - MULTIMEDIA FILTRATION SYSTEMS MS NOT ON WEBSITE
SECTION 230000 - PACKAGED COMPUTER ROOM AIR CONDITIONING SYSTEM
SECTION 230000 - PACKAGED HEAT TRANSFER UNITS
SECTION 230000 - PACKAGED TERMINAL AIR CONDITIONERS, AIR-COOLED
SECTION 230000 - STEAM ABSORPTION CHILLER
SECTION 230000 - STEAM CONDENSATE RETURN UNITS
SECTION 230000 - TERMINAL UNITS
SECTION 230593 - TESTING, ADJUSTING AND BALANCING (15990)
SECTION 230900 - MECHANICAL SYSTEMS CONTROLS (15975)
SECTION 230910 - LABORATORY TERMINAL AIR FLOW UNITS & CONTROL (digital)
SECTION 230920 - LABORATORY TERMINAL AIR FLOW UNITS & CONTROL (15910 - analog)
SECTION 230930 - REFRIGERANT DETECTION AND ALARM (15635)
SECTION 231123 - FACILITY NATURAL GAS PIPING (15488)
SECTION 232116 - HYDRONIC PIPING SPECIALTIES (15515)
SECTION 232123 - PLUMBING AND HYDRONIC PUMPS (INCLUDES VACUUM PUMPS) (15160)
SECTION 232216 - STEAM & CONDENSATE PIPING SPECIALTIES (15525)
SECTION 232300 - REFRIGERANT PIPING (15530)
SECTION 232519 - STEAM BOILER CHEMICAL WATER TREATMENT (15188)
SECTION 233100 - HVAC DUCTS & CASINGS (15890)
SECTION 233300 - AIR DUCT ACCESSORIES & RGDS (158950
SECTION 233400 – FANS (15870)
SECTION 233600 - AIR TERMINAL UNITS (15896)
SECTION 234000 - HVAC AIR CLEANING DEVICES (15885)
SECTION 235100 - BREECHINGS, CHIMNEYS & STACKS (15575)
SECTION 235240 - FIRE TUBE BOILERS (STEAM) (15558)
SECTION 236416 - CENTRIFUGAL WATER CHILLERS (15684)
SECTION 236500 - COOLING TOWERS (15710)
SECTION 237213 - ROTARY AIR TO AIR ENERGY RECOVERY WHEELS
SECTION 237323 - CUSTOM AIR HANDLING UNITS (15854)
SECTION 237324 - SEMI-CUSTOM AIR HANDLING UNITS (15855)

SECTION 238216 - COILS AND DRAIN PANS (15820)
SECTION 238219 - FLOOR MOUNTED FAN COIL UNITS (UN-DUCTED) (15763)
SECTION 238220 - HORIZONTAL FAN COIL UNITS (15764)
SECTION 238221 - BLOWER COIL UNITS (15765)

INTRODUCTION:

Manufacturers on this list fall into three categories:

Preferred Manufacturer: Listed manufacturer's product may be used on U-M projects. However, manufacturer's product must be listed as approved in the project's contract documents or specifications. Listing in the PML does not guarantee a product will automatically be listed in a project's documents or specifications.

Conditional Approval: Listed manufacturer's product may be used on select U-M projects, however approval from the respective A & E Technical Committee must first be obtained. If approved, it may be listed as approved in the project's contract documents or specifications. Manufacturers in the Conditional Approval category have gone through successful preliminary review, but Technical Committee requires additional in-service input prior to final category listing.

Under Consideration: Listed manufacturer's product is being evaluated. The product should not be included in U-M projects.

SECTION 211313 (15300) - WET-PIPE SPRINKLER SYSTEMS

Preaction Systems
Siemens (Pyrotronics), Notifier, Viking

Piping - Grooved
Tyco Grinnell, Victaulic

Sprinkler Heads
Reliable
Tyco
Viking
Victaulic

Tamper Switches
Grinnell, System Sensor, Victaulic

Valves - Fire Protection, Detector Check
Grinnell
Reliable
Viking
Victaulic
Hersey-Anvil
Ames

Valves - Fire Protection, Zone Control
Grinnell
Victaulic
Milwaukee
Nibco
Stockham

SECTION 213113 (15320) - FIRE PUMPS

Pumps - Fire

Allis-Chalmers
Aurora
Peerless

SECTION 220000 - UNDERGROUND PIPING IN CONDUIT SYSTEM

Piping Systems - Underground

Perma-Pipe, Rovanco, Under Consideration: Urecon

SECTION 220500 (15010) - COMMON WORK RESULTS FOR MECHANICAL

Fasteners

Refer to UM Master Specification

Fire Stopping

3M, Hilti, Tremco, Manville

Roof Curbs

Pate
Creative Metals
Roof Curbs Engineered and Manufactured by the Manufacturer of the Equipment to be supported

SECTION 220513 (15170) - MOTORS

Motors - General, Premium Efficiency Type Only - 1/2 HP and above

Reliance, Baldor, Dayton, GE, Toshiba, Leeson, Marathon, U.S. Motors

SECTION 220514 (15960) - VARIABLE FREQUENCY DRIVES

Variable Frequency Drives (and variable speed controllers)

Danfoss-Graham, Toshiba, ABB

SECTION 220516 (15125) - PIPE EXPANSION JOINTS

Expansion Joints - Bellow Type

Flexonics, Metraflex, Microflex, Twin City Hose

Expansion Joints - Externally Pressurized

Hyspan, ATS

SECTION 220519 (15130) – THERMOMETERS, PRESSURE GAUGES, AND ACC'S

Pressure Gauges

Dwyer, H.O. Treice, Weksler, Marsh, Ashcroft, Weiss, Miljoco

Pressure & Temperature Plugs

Pete's Plug, Schrader, Sisco, Miljoco

Thermometers

Industrial Glass: H. O. Trerice, Weksler, Marsh, Ashcroft, Weiss, Miljoco
Electronic Digital (light powered): Weiss, Techcontrols, Miljoco

SECTION 220523 (15100)- VALVES

Flow Measuring & Balancing Equipment - Manual Hydronic

PSE Inc.
ITT Bell & Gossett Circuit Setter
Taco
Ellison Annubar
Accuset
Armstrong
T & A (part of Victaulic)
Flow Design Inc

Valves - Automatic Hydronic Regulating/Balancing

Auto-Flow (press. indep.)
Griswold (press. indep.)
B & G (press. indep.)

Valves - Manual Hydronic Regulating

B & G
T & A
Armstrong
Taco
Flow Design

Valves - Ball With Lever Handle

Pegler
Crane
Grinnell
Watts
Jomar
Milwaukee
American Valve
Nibco
Apollo
Hammond

Valves - High Performance Butterfly

Bray
Crane Flowseal
Dezurik,
Fisher Not specified in MS 220523
Grinnell-GHP,
Jamesbury
Milwaukee
Tri-Seal-Valve-Contromatics (formerly Watts/KF Contromatics)
Xomox.
ABZ ABZolute Seal Series 400

Valves - High Performance METAL-TO-METAL SEATED Butterfly

Bray Trilok, Crane Flowseal MS, Metso/Neles Neldisc, Adams MAK, ABZ Extreme 6000 Series, Weir Tricentric, Zwick Tri-Con, Vanessa

Valves - Lubricated Plug

Honestead, Milliken, Resun

Valves - Gas (UL Approved)

Pegler
Jomar
Watts
Grinnell
Crane
Milwaukee "Butter Ball" MS 15100 "Butter Ball" not specified.
Nibco
Hammond
Jamesbury
Apollo
American Valve

Valves - Gate

Watts
Crane
Milwaukee
Grinnell
Stockham
Nibco
Hammond
Apollo

Valves - Swing Check

Milwaukee
Crane
Grinnell
Nibco
Apollo

Valves - Silent Check

(except tunnels) Milwaukee, APCO, Mueller, Metraflex, Apollo
Utility tunnels:
a. 2" and under: Check All
b. over 2" - Durabula, stainless body

SECTION 220533 (15128)– HEAT TRACING FOR PIPING

Heat Tracing

Raychem, Thermon

SECTION 220548 (15240) - VIBRATION CONTROL

Flexible Metal Hose Connectors (Stainless)

Flex Hose Co., Flexonics, Mason, Metraflex
Under Consideration: Twin City Hose

Flexible Metal Hose Connectors (Copper)

Anaconda, Flex Hose Co., Flexonics, Mason, Metraflex

Flexible Connectors (Rubber)

Flex Hose Co., Flexonics, Garlock, Mason, Mercer Rubber Co., Metraflex

Vibration Isolators

Kinetics Noise Control, Mason Industries Inc., Vibration Eliminator Co., Vibration Mounting and Controls (VMC)

SECTION 220553 (15190)- MECHANICAL IDENTIFICATIONS

Pipe Markers

Brady Co. (Signmark Div.), Brimer, Craftmark, Kolbi, MSI (Marking Services Inc.), Seton Name Plate

SECTION 220719 (15250)- MECHANICAL SYSTEMS INSULATION

Insulation - Duct/Pipe/Equipment - Fiberglass

Owens Corning
Knauf
Schullers (Johns Manville)
Armstrong
Pittsburg-Corning
Certainteed
Johns-Manville

Insulation - Flexible/Elastomeric/Polyolefin

AP Armaflex, IMCOA, Nomaco K-Flex, Rubatex

Insulation - PVC Covering, Elbows and Fittings

Proto
Zeston
Ceelco

Insulation - Removable Jackets

Q-Master by ESI
Insulation Tech. Inc.

SECTION 221113 (15060) - PIPING MATERIALS & METHODS

Grooved Joints for Copper and Steel Piping (except tunnels):

Victaulic, Tyco Grinnell.

Grooved Joints for Copper Piping In Tunnels:

Victaulic Style 607

Dielectric Fittings

Refer to UM Master Specification

Pipe Hangers and Mechanical Supports

Anvil, Cooper B-Line, Carpenter & Paterson, PHD Manufacturing, Unistrut, Powerstrut

Thermal Hanger Shield Inserts

Cooper B-Line, ERICO International Corp, Pipe Shields Inc., Rilco Manufacturing Company, Value Engineered Products, American Mechanical Insulation Sales

Piping - Lab Waste and Vent (Polypropylene)

Enfield, Georg Fisher Fuseal, Orion, Zurn

Strainers - Steam & Water

Keckley
Yarway

Mueller
Spirex-Sarco
Metraflex
Watts
Armstrong
Victaulic (grooved water piping only)
Tyco Grinnell (grooved water piping only)

SECTION 221119 (15411) - DOMESTIC WATER PIPING SPECIALITIES

Backflow Preventers

Ames
Conbraco
Febco
Watts
Zurn-Wilkins

Hydrants - Wall Type

Woodford
Zurn
Chicago
J.R. Smith

Vacuum Breakers - Backflow Prevention

Kewaunnee
Chicago Water Saver
Bell & Gossett
Watts
Conbraco

Valves - Water Pressure Regulating

Bell & Gossett, Conbraco, Hoffman, Keckley, Leslie, Spirax Sarco, Watts

Water Hammer Arrestors

Zurn
Watts
Josam
J.R. Smith
Sioux Chief
Wade

SECTION 221319 (15420)- DRAINAGE SPECIALITIES

Drains - Roof, Floor and Trench, Grease Interceptors

Josam
J.R. Smith
Zurn
Wade
Watts
Sioux Chief

Under Consideration: MIFAB (V.E. Sales Co.)

SECTION 221500 (15481) - COMPRESSED AIR ACCESSORIES

Air Compressors - Screw Type (1800 RPM)

Atlas - Copco
Quincy QSI Series

Air Compressors - Reciprocating

Quincy
Gast
Devilbliss

Air Dryers and Related Filters

Wilkinson
Zeks
Van-Aire
Hankison

Air Pressure Reducing Stations

Van-Aire
Zeks
Parker-Hannifin
Fisher
Siemens
Wilkerson

SECTION 223116 (15455) - WATER SOFTENER

Deionized Water and Reverse Osmosis Water Suppliers

Crown Solutions (Veolia)
Siemens/U.S. Filter
Ionpure
Millipore

Water Treatment Equipment - Softeners

Crown Solutions (Veolia)
Burmah / Venture (H.V. Burton)
Bruner (K.L. McCoy)

Water Treatment Equipment

Refer to U-M Master Specifications

SECTION 224200 (15440) - PLUMBING FIXTURES

Domestic Water Heaters - Gas Fired Or Electric

Lochinvar
A.O. Smith
State
Rheem
Raypak

Under Consideration: Copper Fin (Quality water & air)

Emergency Shower And Eyewash

Bradley, Haws, Speakman

Faucets - Automatic, Battery and Electric Type

American Standard, Chicago Faucets, Sloan, Zurn

Faucets - Manual

American Standard, Chicago Faucets, Moen

Plumbing Fixtures - Water Closets, Lavatories, Urinals And Sinks

Lavatories:

American Standard, Crane, Kohler, Sloan, Zurn

Urinals:

American Standard, Kohler, Sloan, Zurn

Water Closets:

American Standard, Crane, Kohler, Sloan

Shower Heads

American Standard, Chicago Faucet, Kohler, Speakman, Symmons

Toilet Room Fixture Supports

Josam , J.R. Smith, Wade, Watts, Zurn

Toilet Seats

Bemis, Centoco, Church

Valves - Flush Including Automatic Flushing System

Sloan, Kohler, Zurn

Valves - Shower Control Valves

American Standard, Chicago Faucet, Kohler, Powers, Speakman, Symmons

Valves - Thermostatic Mixing for Handwashing

Powers, Symmons, Wilkins

Water Coolers

Halsey Taylor, Haws, Oasis International

Water Filters - Inline Type

Cuno
Filtrine
Honeywell
Culligan
Dollinger
Bruner

SECTION 230000 - AIR COOLED CONDENSING UNITS

Air Cooled Condensers

Bohn, Dunham Bush, McQuay, Trane, York

Refrigeration Compressors

Copeland, Dunham Bush, McQuay, Tecumseh, Trane, York

SECTION 230000 - AIR COOLED PACKAGED CHILLERS

Chillers - Reciprocating, Air-Cooled

Trane, York by Johnson Controls
Under Consideration: Carrier.

Chillers - Process Cooling

Filtrine, Liebert, Trane, Neslab

Refrigeration Compressors

Tecumseh, Copeland, Trane, York, McQuay

SECTION 230000 - DUCTLESS SPLIT ROOM AIR CONDITIONERS- AIR COOL

Air Conditioning Units - Ductless, Spot Coolers

Daikin, Friedrich, Liebert, Mitsubishi, Sanyo, Trane

SECTION 230000 - HEAT EXCHANGERS & CONVERTERS

Dry Coolers

McQuay, Trane, York, Bohn

Convertors (Shell & Tube) - Steam To Hot Water

Bell & Gossett, Taco, Armstrong, Mueller

Heat Exchanger - Plate & Frame

Alpha-Laval, Armstrong, Bell & Gossett, Mueller, Tranter

Laser Heat Exchangers - Water Cooled

Haskris
Remcor
Neslab
Laser Pure (Coherent)

SECTION 230000 - HUMIDIFIERS

Armstrong, Cemline, Dri-Steem, Herrmidifier, Nortec, Pure, Spirax-Sarco, Stulz

SECTION 230000 – HVAC WATER TREATMENT

Chemical Service Providers

Chemtreat
Crown Solutions
GE Water
Kroff
Mitco
Nalco
Rochester Midland

HVAC Water Treatment Equipment

Refer to U-M Master Specifications

SECTION 230000 - MULTIMEDIA FILTRATION SYSTEM

Acceptable Manufacturers

Crown Equipment Systems, PEP Filters, Everfilt

SECTION 230000 - PACKAGED COMPUTER ROOM AIR CONDITIONING SYSTEM

Air Conditioning Units - Computer Room

APC, Liebert, Stulz

SECTION 230000 - PACKAGED HEAT TRANSFER UNITS

Bell & Gossett

SECTION 230000 - PACKAGED TERMINAL AIR CONDITIONERS, AIR-COOLED

Air Conditioning Units - Package Type (thru the wall self-contained DX)
IslandAire, McQuay, Trane, York

Air Conditioning Units - Window Type (Flush installation with wall exterior)
Comfort-Aire, Fedders, White Westinghouse

SECTION 230000 - STEAM ABSORPTION CHILLER

Chillers - Absorption
Trane, York by Johnson Controls

SECTION 230000 - STEAM CONDENSATE RETURN UNITS

Condensate Meters - Gravity Type - no longer used

Condensate Receiver
ITT Domestic, Skidmore, Shipco, Spirax-Sarco

Condensate Meters - Magnetic Induction
Refer to U-M Master Specification 230900

Pumps - Boiler Feed
Skidmore, Spirax-Sarco, Shipco, Weinman

Pumps - Condensate (Condensate Receiver Must Be Cast Iron)
ITT Domestic (Hoffman), Skidmore, Spirax-Sarco, Shipco, Weinman

Pumps - Condensate, Steam Or Air Pressure Powered
Sarco, Armstrong

SECTION 230000 - TERMINAL UNITS

Baseboard Radiation, Finned Tube Radiation
Dunham-Bush, Rittling, Slantfin, Sterling Radiator, Trane, Vulcan Radiator

Panel Radiators
Jaga, Runtal Radiator, Sterling

Convectors
Dunham-Bush, Rittling, Sterling, Trane

Unit Heaters
Dunham-Bush, McQuay, Modine, Reznor, Rittling, Sterling, Trane, Wing

Cabinet Heaters
Dunham-Bush, McQuay, Modine, Rittling, Sterling, Trane

Unit Ventilators
American Air Filter, Trane

Electric Cabinet Heaters
Berko, Qmark, Trane

Electric Heating Coils
Brasch, Chromalux, Indeeco, Trane

Gas Fired Duct Furnaces
Modine, Reznor, Sterling, Trane

Radiant Ceiling Panel - Hot Water
Aero-Tech, Air-Tex, Sun-El, Sterling/TWA

SECTION 230593 (15990) - TESTING, ADJUSTING AND BALANCING

TAB Sub-Contractors
Absolut, Air Flow Testing, Enviroaire - Total Balance

SECTION 230900 (15975)- MECHANICAL SYSTEMS CONTROLS

Because of the extensive amount of control components, approved manufacturers are listed in U-M Master Specification 230900.

SECTION 230910 (digital) , 230920 (15910- analog) - LABORATORY TERMINAL AIR FLOW UNITS & CONTROLS

Fume Hood Monitors
Phoenix,

Laboratory Terminal Airflow Units (LTAUs)
Phoenix

SECTION 230930 (15635) - REFRIGERANT DETECTION AND ALARM

Acceptable Manufacturers
MSA Corporation

SECTION 231123 (15488) – FACILITY NATURAL GAS PIPING

Master Gas Valve Boxes
Ohmeda
Mueller

SECTION 232116 (15515) - HYDRONIC PIPING SPECIALTIES

Automatic & Manual Air Vents
Armstrong, B & G, Hoffman, Wheatley, Taco

Suction Diffusers
Armstrong, B & G, Grinnell, Taco, Victaulic, Wheatley

Triple Duty Valves
Armstrong, B & G, Taco, Wheatley

Water Pressure Relief Valve
ITT B & G, ITT McDonnell Miller, Consolidated, Watts

Water Pressure Regulating/Reducing Valve
B & G, Hoffman, Watts

Air Separators
Amtrol, Armstrong, B & G, Spirotherm, Wheatley

Coalescing Separator

Spirotherm (Spirovent Dirt HV)
Thrush (Aar-O-Vent Dirt DSR & DHR)

Expansion Tank
Amtrol, Armstrong, Bell and Gossett, Wessels, Taco CA

Centrifugal Separator
Griswold Controls, Lakos

In-Line Filters
Bruner, Culligan, Cumo Dollinger, Honeywell

Glycol Feed Packages
Advantage Control Inc., Burmah, Crown Engineering, J.L. Wingert Co., Neptune Chemical Pump Co., Wessel Co.

Inhibited Ethylene Glycol
Dowtherm SR-1

SECTION 232123 (15160) – PLUMBING AND HYDRONIC PUMPS

Pumps - Condensate Waste
Little Giant, Hartell, Marsh, Bekette

Pumps - Double Suction - Base Mounted
Bell & Gossett (ITT), Allis-Chalmers, Weinman, Armstrong, Paco
Under Consideration: Patterson

Pumps - End Suction , Close Coupled - Base Mounted
Bell & Gossett (ITT), Allis-Chalmers, Weinman, Armstrong, Taco
Under Consideration: Patterson

Pumps - End Suction , Flexibly Coupled - Base Mounted
Bell & Gossett (ITT), Allis-Chalmers, Weinman, Armstrong, Taco
Under Consideration: Patterson

Pumps - In-Line Circulators
Bell & Gossett (ITT), Armstrong, Grundfos, Weinman, Taco, Wilo
Under Consideration: Patterson

Pumps - In-Line Close Coupled - Hanger Supported
Bell & Gossett (ITT) Series 60, Grundfos, Armstrong, Weinman, Taco 1600, Wilo
Under Consideration: Patterson

Pumps - In-Line Split Coupled - Base Mounted
Bell & Gossett (ITT) Series 80-SC, Grundfos, Armstrong, Weinman, Taco KS Vertical Split Coupled

Pumps - Sump Pumps
Vertiflo (B&G), Allis Chalmers, Weinman, Armstrong, Zoller, Weil
Under Consideration: Aurora / Hydromatic (K.L. McCoy)

Pumps - Vacuum
Nash
Domestic
Sehi
Shipco
Under Consideration: Skidmore (K.L.McCoy), Busch (Kerr pump & supply)

SECTION 232216 (15525) - STEAM AND CONDENSATE PIPING SPECIALTIES

Steam Pressure Reducing Stations
Armstrong, Leslie, Spence, Spirax-Sarco,

Steam Safety Relief Valves
Armstrong, Consolidated, Spence, Spirax-Sarco, Watson McDaniel

Steam Traps - All Types
Armstrong, Spirax Sarco, Hoffman (ITT), Watson McDaniel

Flash Tank, Vacuum Breaker, Drip Pan Elbow, Pressure Reducing Valve
Refer to U-M Master Specification

SECTION 232300 (15530)- REFRIGERANT PIPING

Valves - Refrigeration
Asco, Hansen, Henry Valve, Parker, Sporlan

SECTION 232519 (15188)- STEAM BOILER CHEMICAL WATER TREATMENT

Refer to master specification 232519
Seton

SECTION 233100 (15890) - HVAC DUCTS & CASINGS

Exhaust Ductwork - PVC Coated
United McGill, Tangent, Foremost, Semco

Exhaust Ductwork - Teflon Coated Stainless Steel
Fab-Tech (PermaShield Pipe)

Exhaust Ductwork - FRP
Perry, Spunstrand, Tangent

Flexible Non-Metallic Duct
Atco (Flex-Aire), Flexmaster, Hart & Cooley (Genflex)

Double-Walled Panels, Plenums, and Duct at Outside Air Intake Plenums
McGill Airflow LLC., Semco Mfg Co., VAW Systems, Vibro-Acoustics

Clothes Dryer Vent Ductwork
Intended for heavy use clothes dryer applications such as resident hall laundry rooms with multiple dryers where access to disassemble duct for periodic cleaning may be challenging. For simple dryer applications, specifying conventional duct may be more appropriate.
Nordfab Quick-Fit/ACS of Fenton, Missouri

Duct Sealants
Hardcast, McGill Airflow LLC. , Polymer Adhesives, Ductmate, Childers/Foster

SECTION 233300 (15895)- AIR DUCT ACCESSORIES & RGDs

Duct Flexible Connectors
Ductmate, Duro-Dyne, Fanair, Pathway, United McGill, Ventglas

Dampers - Fire, Smoke, Combination Fire/Smoke
Air Balance, American Warming & Vent, Greenheck, Nailor, Ruskin, Vent Products

Dampers - Balance (manual volume control)

American Warming & Vent, Arrow, Flexmaster (for round ducts, single branch takeoff only), Ruskin, Greenheck, Krueger, Vent Products, Young Regulator

Dampers - Iris

Continental Fan Manufacturing Inc.

Dampers - Backdraft

Young Regulator Company.
American Warming & Ventilating Co.
Vent Products Co., Inc.
Arrow United Industries.

Sound Attenuators

IAC, Semco, Ruskin, United McGill, VAW Systems, Vibro-Acoustics, Price

Registers, Grilles and Diffusers

Carnes, E.H. Price, Krueger, MetalAire, Nailor, Titus, Tuttle & Bailey

Louvers

American W. & V., Ruskin, Vent Products

Ductwork Cleaning Specialist

Sani-Vac, Power Vac, High Tec Vacuum, Aero Filters Inc., Stanley Steemer Great Lakes Inc.

SECTION 233400 (15870)- FANS

Fans: All types except Vane and Tube Axial, FRP, High-Plume Induction Lab Type

Aerovent, Acme, Barry Blower, Buffalo, Carnes, Greenheck, Loren Cook, Penn, Trane, Twin City

Fans - High-Plume Induction-Type Lab Exhaust

Greenheck - Vektor , Strobic,

Fans -FRP Construction

M.K. Plastics
Under Consideration: Harrington

Fans -Vaneaxial, TubeAxial

Buffalo, Cook, Greenheck, Joy, Trane, Woods

SECTION 233600 (15896)- AIR TERMINAL UNITS

VAV, CAV, Dual Duct, and Retrofit Terminal Air Flow Units

Carnes, Titus, Krueger, Metalaire, Nailor Industries, Inc., Price Industries, Tuttle and Bailey

SECTION 234000 (15885)- HVAC AIR CLEANING DEVICES

Primary Filters, Secondary Filters and Filter Housing Rack

American Air Filter, Camfarr, Eaton, Flanders, Purolator, Tri-Dim

HEPA Filters

Camfarr, Eaton, Flanders

Gas Adsorption Filters

American Air Filter, Camfarr, Charcoal Service Corp., Flanders, Purolator

Filter Gauges

Bacharach Instrument Co., Deiterich Standard Corp., Dwyer, Moeller Instrument Co.

SECTION 235100 (15575)- BREECHINGS, CHIMNEYS, AND STACKS

Boiler Stack

Metalbestos, Metal-Fab, Van Packer, Schebler, AMP Co

SECTION 235240 (15558)- FIRE TUBE BOILERS (STEAM)

Boilers

Bryan, Unilux, Burnham, Cleaver Brooks, Johnston

SECTION 236416 - CENTRIFUGAL WATER CHILLERS

Chillers - Centrifugal

Trane, York by Johnson Controls

Chillers - Screw or Scroll

Dunham-Bush
York by Johnson Controls
Trane

SECTION 236500 (15710)- COOLING TOWERS

Cooling Towers

Baltimore Air Coil, Marley, EVAPCO

SECTION 237213 - ROTARY AIR TO AIR ENERGY RECOVERY WHEELS

Semco, Desicant Rotors International

SECTION 237323 (15854) - CUSTOM AIR HANDLING UNITS

Air Handlers

Air Enterprises, Air Flow Equipment, Buffalo Air Handling, Governair LLC,
Mafna Air Conditioning, Inc., TMI Custom Air Systems, Ventrol, Ingenia

Air Blenders

Blender Products Inc., R.M. Products

Gas Fired Make-Up Air Units (direct and indirect)

Rapid, Reznor, Sterling, Trane
Under Consideration: Modine (Air Design), Greenheck

SECTION 237324 (15855) - SEMI-CUSTOM AIR HANDLING UNITS

Air Handlers

Air Flow Equipment, Buffalo Air Handling, Governair LLC,
Mafna Air Conditioning, Inc., McQuay, Thermal Corporation,
TMI Custom Air Systems, Trane, Ventrol, Ingenia

Air Blenders

Blender Products Inc., R.M. Products

SECTION 238216 (15820) - COILS AND DRAIN PANS

Aerofin, Heatcraft, Marlo, McQuay, Trane, USA Coil, Ventrol, York, Coil Replacement Co

SECTION 238219 (15763)- FLOOR MOUNTED FAN COIL UNITS (UN-DUCTED)

Airtherm, Enviro-Tec by Johnson Controls, International Environmental Corporation, Price, Zehnder Rittling

SECTION 238220 (15764) - HORIZONTAL FAN COIL UNITS

Airtherm, Enviro-Tec by Johnson Controls, International Environmental Corporation, Mcquay International, Price, Trane, Zehnder Rittling

SECTION 238221 (15765) - BLOWER COIL UNITS

Airtherm, Enviro-Tec by Johnson Controls, International Environmental Corporation, Mcquay International, Price, Trane

DESIGN GUIDELINE 8.4
ELECTRICAL PREFERRED MANUFACTURERS LIST

SCOPE

The Electrical Trades Preferred Manufacturers List identifies manufacturers and suppliers who are known to provide good quality products, meet specification and schedule requirements, provide technical support, and provide service after the sales. This list is intended to regulate product quality, standardize electrical designs, and simplify maintenance activities. It is not intended to limit competition. It is not all inclusive. It is a list of manufacturers whose products are well known to the University due to their frequent and successful use.

This List shall be used by A/E's when selecting manufacturers for specification in electrical designs. **A/E'S SHALL SPECIFY ONLY THE LISTED MANUFACTURERS THAT MEET THEIR PROJECT'S REQUIREMENTS, AND SHOULD SPECIFY A MINIMUM OF THREE MANUFACTURERS WHENEVER POSSIBLE.** A/E's may specify manufacturers not on this list to satisfy project requirements, **BUT SHALL OBTAIN UNIVERSITY APPROVAL IN ADVANCE.**

This List **SHALL NOT** be used by Contractors to justify making substitutions for products specified in the construction documents. **CONTRACTORS SHALL PROVIDE THE PRODUCTS SPECIFIED IN THE CONSTRUCTION DOCUMENTS UNLESS THE UNIVERSITY APPROVED THEIR PROPOSED SUBSTITUTIONS AT THE TIME OF BID IN ACCORDANCE WITH THE PROJECT'S STANDARD GENERAL CONDITIONS.**

THIS LIST DOES NOT APPLY to purchases by the University Plant Department of replacement electrical products required to match or maintain existing installations.

This List is revised as needed. Before using it, check the AEC Website for the latest revision.

TABLE OF CONTENTS (HOT-LINKED) **PAGE**

SECTION 260513 - MEDIUM, LOW & CONTROL VOLTAGE CABLES....2
SECTION 260526 - GROUNDING & BONDING FOR ELECTRICAL....2
SECTION 260533 - ELECTRICAL MATERIALS AND METHODS....3
SECTION 260543 - UNDERGROUND SERVICES FOR ELECTRICAL....4
SECTION 260800 - ELECTRICAL ACCEPTANCE TESTS....4
SECTION 261100 - UNIT SUBSTATIONS....5
SECTION 262000 - LOW VOLTAGE ELECTRICAL DISTRIBUTION....7
SECTION 262726 - WIRING DEVICES....8
SECTION 262900 - MOTOR CONTROLS....9
SECTION 263000 - ENGINE-GENERATOR SYSTEMS....10
SECTION 263300 - BATTERY EQUIPMENT....10
SECTION 264100 - FACILITY LIGHTNING PROTECTION....11
SECTION 265100 - INTERIOR LIGHTING....11
SECTION 265600 - EXTERIOR LIGHTING....13
SECTION 273523 - EMERGENCY RESPONDER RADIO COVERAGE....13
SECTION 275116 - PUBLIC ADDRESS & MASS NOTIFICATION SYSTEMS....14
SECTION 275126 - ASSISTIVE LISTENING SYSTEM....14
SECTION 275313 - CLOCK SYSTEMS....14
SECTION 281300 - ACCESS CONTROL & MONITORING SYSTEMS....14
SECTION 281600 - SECURITY SYSTEMS....15
SECTION 283100 - FIRE DETECTION & ALARM SYSTEMS....15

SECTION 260513 - MEDIUM, LOW & CONTROL VOLTAGE CABLES

Cables (Medium Voltage)

General Cable
Kerite
Okonite
Prysmian

Cables and Wire (600 Volts)

Alan Wire
Alan Wire and Cable
American Insulated Wire
Cerro Wire
Encore
General Cable
Republic Wire
Rockbestos-Surprenant
Service Wire
Southwire
United Copper Industries

Type MC Cables (600 Volts)

AFC
Encore
Kaf-Tech
Rockbestos-Surprenant
Service Wire
Southwire
United Copper Industries

2-Hour Fire Rated Cables (600 Volts)

Pyrotenax Mineral Insulated (Type MI) by Pentair

Control Cables and Wire

Belden
Coleman

Cable Splices for Medium Voltage Cable

Raychem

Cable Terminations for Medium Voltage Cable

Raychem

SECTION 260526 - GROUNDING & BONDING FOR ELECTRICAL

Ground Connections

Burndy Hyground (Proper dies must be used)
Cadweld
Harger Lightning & Grounding
Thermoweld
Thomas & Betts Blackburn (Above grade only)

SECTION 260533 - ELECTRICAL MATERIALS AND METHODS

Cable Trays - Center Spline and Wall Mount Types (Use only where ladder and wire basket trays cannot be used, and only with ITCS (Campus projects) or MCIT (UMHHC projects) approval)

B-Line
Legrand Cablofil
Mono-Systems
Thomas & Betts

Cable Trays - Ladder Type

B-Line
Chalfant
Cope
Globetray (GS Metals)
Legrand Cablofil
Mono-Sysems
MP Husky
Thomas & Betts

Cable Trays – Wire Basket Type (Use only with ITCS (Campus projects) or MCIT (UMHHC projects) approval)

B-Line
Chalfant
Cope
Legrand Cablofil
Mono-Systems
MP Husky
WBT

Conduits, Raceways and Accessories -
EMT, liquid-tight flexible metallic conduit, and/or non-liquid-tight flexible metallic conduit/raceway; plus associated accessories, fittings, junction and pull boxes, and related products

Products of all manufacturers are acceptable as long as they are electro-galvanized steel, have a smooth interior, and are NRTL labeled for the application.

Rigid (galvanized metal), and IMC (intermediate metal) conduits/raceway, plus associated accessories, fittings, junction and pull boxes, and related products

Products of all manufacturers are acceptable, as long as they are hot-dipped galvanized steel inside and out, have a smooth interior, and are NRTL labeled for the application. Boxes shall be cast, not formed. IMC may only be used when tools specifically designed for IMC are used.

PVC conduit/raceway (Type DB, Schedule 40, and Schedule 80), plus associated accessories, fittings, junction and pull boxes, and related products

Products of all manufacturers are acceptable as long as they are sunlight resistant, and NRTL labeled for the application. Products from manufacturers making both the conduit and the fittings are preferred whenever possible.

Fiberglass Reinforced Epoxy (FRE) conduit/raceways, accessories, fittings, and related products

Champion
FRE

Cord Reels

Appleton

Hubbell
Reel-O-Matic Systems
Woodhead

Electrical Enclosures
Carlon (For use with PVC raceways)
Hammond
Haoffman
Park Metal
Rittal

Fire Stop Compounds
A. D. Fire Protection Systems
Flame Safe
Hilti
Nelson
STI SpecSeal
3M Company

Structural Support Materials
Aickinstrut (Fiberglass)
B-Line
Champion (Fiberglass)
Hilti
Powerstrut
Unistrut

Surface and Underfloor Wireways
Carlon
Hubbell
Legrand Evolution Floor Boxes
Legrand Wiremold
Panduit

SECTION 260543 - UNDERGROUND SERVICES FOR ELECTRICAL

Underground Hand Holes, Junction Boxes and Pull Boxes
Carson-Brooks
CDR Systems
Quazite

SECTION 260800 - ELECTRICAL ACCEPTANCE TESTS

Nationally Recognized Testing Laboratory Services
CSA
ETL
MET Laboratories
UL (Northbrook, IL)

Testing Services
Bisbee Infrared Services (Penny Wilson, (517) 787-4620)
Northern Electrical Testing (Lyle Detterman, (810) 689-8980)
Utilities Instrumentation Services (David Wheeler, (734) 482-1450)

SECTION 261100 - UNIT SUBSTATIONS

Non-Current Limiting Fuses (Primary)

Eaton/Cutler-Hammer Type RBA-400 (With high interrupting capacity adapter)
S & C Type SM-5SS (With high interrupting capacity adapter)

Current Limiting Fuses (Primary)

Eaton/Cutler-Hammer Type CLE
Ferraz-Shawmut, Type CL-14
General Electric Type EJO

KWHR/Demand Meters

Schneider Electric PowerLogic ION8650 (With options per Master Spec 261100)

15 kV Fused and Unfused Primary Switches (5kV rated switches may only be used for 5 kV (4,160 volt) class motors)

Eaton/Cutler-Hammer
Powercon
Square D

15kV Metal Clad Switchgear and/or Circuit Breakers (5kv rated circuit breakers may only be used for 5 kV (4,160 volt) class motors)

Eaton/Cutler-Hammer
Square D

Circuit Breakers for 600-volt Class Secondary Switchgears and Switchboards

ABB (ASEA Brown Boveri)
Eaton/Cutler-Hammer
Square D

Transformers

ABB (ASEA Brown Boveri)
Eaton/Cutler-Hammer
MGM
Olsun
Square D

Substation Assemblers (Using components from Preferred Manufacturers only)

ABB (ASEA Brown Boveri)
Controlled Power Corporation
Eaton/Cutler-Hammer
Electrical Product Sales
Park Metal
Pederson Power Products
Powercon
Shallbetter
Square D

Addresses of above Assemblers

ABB (ASEA Brown Boveri)
12040 Regency Parkway
Cary, North Carolina 27518

Phone: 919 856 2360
FAX: 919 807 5022

ABB Distributor
Galco Industrial Electronics
26010 Pinehurst
Madison Heights, MI 48071
Phone: 248 336 4546

Controlled Power Corporation
295 Wetmore Ave SE
Massillon, Ohio 44646
Phone: 800 321 0414
FAX: 330 834 3201

Eaton/Cutler-Hammer
McNaughton-McKay Electric Co.
4670 Runway Blvd, Ann Arbor, MI 48108
Phone: 734-327-6251
Fax: 734-327-6285

Eaton/Cutler-Hammer
Service Electric Supply Co.
15424 Oakwood Drive, Romulus, MI 48174
Phone: 734-229-9100
Fax: 734-229-9101

Electrical Product Sales
Dick Stone
(248) 583-6100

Olsun Electrics
HEK Inc.
6083 Lafayette
Ann Arbor, MI 48103
Phone: (734) 995-0900

Park Metal
19197 Sherwood Street, Detroit, MI 48234
Phone: 313-366-2200
Fax: 313-366-1540

Pederson Power Products
1521 Eden Gardens Drive, Fenton, MI 48430
Phone: 810-750-3032
Fax: 810-750-9557

Powercon/Woodlyn Sales
9357 General Drive - Suite 102, Plymouth, MI
48170
Phone: 734-453-2754
Fax: 734-453-2759

Square D
Madison Electric Co.
3900 Jackson Rd, Ann Arbor, MI 48106
Phone: 734-_665-6131
Fax: 734-665-9239

Square D
Wyandotte Electric Supply Co.
212 S. Wagner Rd, Ann Arbor, MI 48103
Phone: 734-769-6400
Fax: 734-769-7745

SECTION 262000 - LOW VOLTAGE ELECTRICAL DISTRIBUTION

Bus Ducts

Eaton/Cutler-Hammer
General Electric
Siemens
Square D

Fuses (600 Volts and Below)

Bussmann
Mersen Electrical Power (formerly Ferraz-Shawmut)
Littlefuse

Surge Protective Devices

Current Technology
Eaton/Cutler-Hammer-Tycor
Intermatic (For protection of individual loads and receptacle panels only)
Leviton (For protection of individual loads and receptacle panels only)
Liebert
L.E.A. Dynatech
Square D

Switchboards, Panelboards and Circuit Breakers

Eaton/Cutler-Hammer (Only with U of M Lugs - confirm on shop drawings)
General Electric
Industrial Electrical Manufacturing (For custom and retrofit applications only)
Siemens
Square D

Time Switches

Intermatic
Paragon
Sangamo
Tork

Transformers (Liquid Filled and Dry Pad-Mounted Type)
Eaton/Cutler-Hammer
General Electric
Olsun Electrics
Pennsylvania
Pioneer

Transformers (Distribution Dry Type)
Acme
Eaton/Cutler-Hammer
General Electric
Hammond Power Systems
Hevi-Duty
MGM
Olsun Electrics
Siemens
Square D

SECTION 262726 - WIRING DEVICES

Dimmer Switches
Leviton
Lithonia
Lutron

Occupancy Sensors (Infrared, Ultrasonic, Combination Infrared/Microphonic Dual Technology and Combination Infrared/Ultrasonic Dual Technology)
Cooper Controls (Eaton)
Hubbell
Legrand WattStopper
Leviton
Lutron
Sensor Switch
Tork

Pin & Sleeve Connectors
Crouse-Hinds
Hubbell
Killark
Legrand Pass & Seymour
Leviton

Power Poles
Hubbell
Legrand Wiremold
Mono-Systems
Steelcase

120-volt, 20-ampere Receptacles and Plugs
Arrow Hart (Cooper)
Bryant
Hubbell
Legrand Pass & Seymour

Leviton

120-volt, 20-ampere Receptacles (GFCI, Hospital Grade, TVSS & Child Resistant)
Arrow Hart (Cooper)
Bryant
Hubbell
Legrand Pass & Seymour
Leviton

Special Power Receptacles and Plugs
Arrow Hart (Cooper)
Bryant
Hubbell
Legrand Pass & Seymour
Leviton

USB Charging Port Receptacles
Arrow Hart (Cooper)
Bryant
Hubbell
Legrand Pass & Seymour
Leviton

120/277 Volt, 20-Ampere Light Switches
Arrow Hart (Cooper)
Bryant
Hubbell
Legrand Pass & Seymour
Leviton

SECTION 262900 - MOTOR CONTROLS

Capacitors for Power Factor Correction
Aerovox
Eaton/Cutler-Hammer
General Electric
Myron Zucker
Siemens
Square D

Motor Controls (MCC's, Starters, Contactors, Disc. Switches and Control Devices
Allen-Bradley
Eaton/Cutler-Hammer
General Electric
Siemens
Square D

Motor Starters (Electronic Soft Starter Type)
Allen-Bradley
Eaton/Cutlet-Hammer
Sprecher & Schuh

SECTION 263000 - ENGINE-GENERATOR SYSTEMS

Natural Gas Fired Engine-Generator Sets

Caterpillar
Cummins
Generac Industrial Power
Kohler
Olympian

Automatic and Manual Transfer Switches (Open and Closed Transition Types)

ASCO
Cummins
Eaton/Cutler-Hammer
GE Zenith Controls
Kohler

Automatic Transfer Switches (Soft-Loading Type)

ASCO
Eaton/Cutler-Hammer
Kohler

Resistive Load Banks

Avtron
Sephco
Simplex

SECTION 263300 - BATTERY EQUIPMENT

Batteries

C & D Technologies
Chloride Plante
Enersys
Johnson Controls

Battery Chargers

C & D Technologies
Enersys
Hi-Tran
LaMarche
SCI

Uninterruptible Power Supply Systems (Battery type)

A.P.C
Best (Individual small load units only)
Controlled Power
Liebert
MGE
Mitsubishi (Totally solid-state)
Toshiba

Rotary UPS Systems

Designed Power Solutions International (DPSI)

SECTION 264100 - FACILITY LIGHTNING PROTECTION

Lightning Protection Services

Guardian Equipment, Novi, MI (248) 449-5200
Harger Lightning & Grounding (via distributor Young & Champagne, 313-491-6500)
Michigan Lightning Protection, Grand Rapids, MI (616) 453-1174
Orion Services, Wixom, MI (248) 624-2120

SECTION 265100 - INTERIOR LIGHTING

Lighting Representatives

Each of the following lighting representatives serves over one hundred lighting manufacturers. After the Design Development phase, the lighting designer shall send a copy of the lighting fixture schedule to each of the lighting representatives below to request comments and recommended equivalents. The lighting designer shall evaluate the proposed recommendations to ensure design compliance and then incorporate equivalents into the lighting fixture schedule. The proposed lighting equivalents shall meet or exceed the design requirements as well as any other requirements in the U of M Design Guidelines.

Clarus Lighting & Controls
Madison Heights, MI
Paul Brennan, 248-677-0850
www.clarus-lighting.com

Gasser Bush Associates
Livonia, MI
Randy Stowers, 734-266-6705
www.gasserbush.com

Michigan Lighting Systems – East
Troy, MI
Shawn Schiappacasse, 248-542-2200
www.mls.lighting

Resource Lighting Group
Berkley, MI
Shawn Stevenson, 248-545-9555
www.resourcelightinggroup.com

Ballasts (Electronic Compact Fluorescent)

Aculite
Advance Smart Mate
Lightolier
Prescolite

Ballasts (Electronic Rapid Start T-8 Fluorescent)

Advance Optanium
Bodine (For emergency lighting only)
Osram/Sylvania Quicktronic Professional
Universal AccuStart

Ballasts (Electronic Dimming T-8 Fluorescent)

Advance Mark X (5% dimming type)
Lightolier (1% dimming type)
Osram/Sylvania (10% dimming type)

Emergency Power Ballasts (Electronic Rapid Start T-8 Fluorescent)
Bodine (For emergency lighting only)
Lithonia

Ballasts (H.I.D.)
Advance
MagneTek
Universal

Dimming Systems
AMX
Crestron Electric, Inc.
E.T.C.
Leviton (Small single room systems only)
Lithonia
Lutron
Strand (Stage lighting only)

Emergency Lights
Chloride
Dual-Lite
Emergi-Lite
Exide Lightguard
Lightalarms
Lithonia
Sure-Lite

Exit Signs (LED)
Chloride
Dual-Lite
Emergi-Lite
Exide Lightguard
Lightalarms
Lithonia
LSI Industries
Morlite (High abuse areas) (Philips)
Prescolite
Sure-Lites

Lamps
General Electric Ecolux
Osram/Sylvania Ecologic
Philips Alto
Venture (H.I.D. only)

Lighting Fixtures (Fluorescent)
Alkco (Philips)
Bartco
Columbia
Cooper (Metalux)
Day-Brite (Philips)
Fail-Safe (Cooper)
Kenall
Kirlin
Lightolier (Philips)
Linear Lighting
Lithonia (Acuity)
LSI Industries

Finelite
Focal Point
Guth (Philips)
Harris
Holophane (Acuity)
Hubbell
Keene
Peerless (Acuity)
Prudential
Quality (Philips)
Visa
Williams
Zumtobel

Lighting Fixtures (H.I.D.)

Best
Crouse-Hinds (Cooper)
Day-Brite (Philips)
Fail-safe (Cooper)
General Electric
Guth (Philips)
Harris
Holophane
Hubbell
Kenall
Lightolier (Philips)
Lithonia (Acuity)
LSI Industries
Lumark (Cooper)
McGill
Quality (Philips)
SPI

Lighting Fixtures (Compact Fluorescent and Incandescent)

Globe
Gotham (Acuity)
Halo
Harris
Kenall
Kirlin
Lightolier (Philips)
Lithonia (Acuity)
LSI Industries
Omega (Philips)
Prescolite (Hubbell)
Quality (Philips)
Swivelier

Lighting Fixtures (LED)

LED fixtures with a DesignLights Consortium (DLC) listing
LED fixtures with a U.S. Department of Energy (DOE) "LED Lighting Facts" label
LED fixtures with a U.S. Environmental Protection Agency (EPA) ENERGY STAR label
CREE
Man-D-Tec (Elevator cab lighting)

SECTION 265600 - EXTERIOR LIGHTING

Lighting Fixtures (Outdoor Building, Parking Lot and Roadway with poles by fixture supplier)

BEGA (Conditional Approval)
Gardco
Holophane
Kim (Hubbell) (Conditional Approval)
Lithonia Hi-Tek
LSI Industries
McGraw-Edison
Sterner
Wide-Lite (Philips)

Lighting Fixtures (Outdoor Pedestrian Area with poles by fixture supplier)

Lumec

Photoelectric Lighting Controls

Crouse-Hinds

Holophane
Hubbell
Intermatic
Tork

SECTION 273523 – EMERGENCY RESPONDER RADIO COVERAGE

Emergency Responder Radio Services

Advance Wireless Telecommunications (Joe Campbell, 248-295-4600)
Comsourse Inc. (Mike Hilverding, 248-853-5430)
Continental Wireless (Breogan Link, 800-527-2000)
RF Connect (Pat Rhatigan, 734-891-5950)
Motor City Technologies, a division of Motor City Electric Co. (David Krausman, 313-957-3459)

Emergency Responder Radio Signal Survey

JDRM Engineering (Dave DesJardins, 419-824-2400)

SECTION 275116 - PUBLIC ADDRESS & MASS NOTIFICATION SYSTEMS

Public Announcement and Sound Systems

Aiphone Communications Systems
Atlas/Soundolier
Dukane
Rauland-Borg

SECTION 275126 - ASSISTIVE LISTENING SYSTEM

Hearing Assistance Systems

Phonic Ear (for classroom applications)
Sound Associates (for auditorium and theater applications)

SECTION 275313 - CLOCK SYSTEMS

Central Clock Systems

Primex (GPS synchronous wireless)
Simplex Time Recorder (through Simplex/Grinnell)

Clocks (Battery Powered)

Edwards
Franklin
Howard Miller
Primex (GPS synchronous wireless)

SECTION 281300 - ACCESS CONTROL & MONITORING SYSTEMS

Card Access Control Systems

Diebold/CBORD (for Housing facilities)
Software House (for Campus buildings)

Card Access Control System Designers/Installers

Cabling Concepts (Tim Grady, 248-363-4200)
Siemens (Phil Bowen, 734-233-5728)
Simplex/Grinnell (John Keith, 248-427-5050)

SECTION 281600 - SECURITY SYSTEMS

Security Camera Systems

Refer to the University of Michigan Division of Public Safety and Security (DPSS) web site http://www.dpss.umich.edu/topics/cameras/ for technical requirements and a compatible hardware list.

Security Systems

ADT Security Systems
Faraday
Radionics (For small systems only)
Simplex Time Recorder

SECTION 283100 - FIRE DETECTION & ALARM SYSTEMS

Fire Alarm Systems

EST (through Riverside Fire and Security only)
Honeywell (UMHHC only)
National Time & Signal
Notifier
Siemens
Simplex (Tyco SimplexGrinnell)
VESDA by Xtralis (for smoke sampling systems only; subsidiary of Honeywell)

U-M Design Guidelines

Technical Committees, Committee Chairs and Email Addresses:

1. Architectural Technical Committee- Co-Chairs:
   Jana Hayford, email: hayford@umich.edu;
   Peg Helner-Peterson, email: mhelner@umich.edu
2. Mechanical HVAC & Controls Technical Committee
   Chair: Ramiro Pan, email: rfpan@umich.edu
   Back-up: Cheryl Duvall: cduvall@umich.edu
3. Mechanical Hydronics & Steam Technical Committee
   Chair: Paul Schmandt, email: pschmand@umich.edu
   Back-up: Murray Jones, email: taliesin@umich.edu
4. Mechanical Plumbing & Fire Protection Technical Committee
   Chair: Brian Begg, email: bbegg@umich.edu
   Back-up: Rosie Hood, email: rlhood@umich.edu
5. Electrical Technical Committee Chair:
   Jeff Walenciak, email: jmwale@umich.edu

Preferred Manufacturers List
General Procedure

Policy: A Preferred Manufacturers List (PML) is maintained by Technical Committees at the University of Michigan (U-M) Department of Architecture, Engineering & Construction (AEC). The PML is used as the basis of manufacturer selection for University projects. The PML is updated on an ongoing basis. The A/E should review the included Preferred Manufacturers List (PML) and follow in the preparation of the specification. If the A/E believes other manufacturers should be considered they must discuss this issue with the Design Manager prior to release of the construction documents.

Purpose of Policy: Improve the quality and value of products provided to the University. Improve manufacturer understanding of the U-M PML revision process.

General: Anyone can Request for Addition or Change of Listing to the PML by contacting the appropriate Committee Chair. The extent of evaluation will vary based on many factors. Therefore, time to evaluate requests will vary.

Manufacturers are listed in the PML in one of three categories:

1. Preferred Manufacturer: Listed manufacturer's product may be used on U-M projects. However, manufacturer's product must also be listed as approved in the project contract documents.
2. Conditional Approval: Listed manufacturer's product may be used on select U-M projects. Approval from the Technical Committee is required. Manufacturer's product must also be listed as approved in the project contract documents. Manufacturers in the Conditional Approval category have gone through successful preliminary review, but Technical Committee requires additional in-service input prior to final category listing.
3. Under Consideration: Listed manufacturer's product is being evaluated. The product should not be included in U-M projects.

All products are expected to meet specification requirements, quality level, and project schedule commitment.

(End of Procedure)

Tracking Number: Master Spec Number- YY MM DD

Request for Addition or Change of Listing to
U-M Preferred Manufacturers List

Date of Request:

From: (Requestor and Contact Information)

To: (U-M Technical Committee Chair)

Please consider addition or change of listing for the following product:

Type of Product/ Specification Article (butterfly valve, interior door, motor starter, etc.):
Product Manufacturer:
Product Make and Model Number(s):
Years Product in Use:
Years Manufacturer in Business:
Standard Warranty Period:
List of Installation Locations Within 50 Miles of Ann Arbor:
Manufacturing Location:

(Consider providing additional product information, such as: product catalogue information, cut sheets, customer reference contacts, code compliance listing, or wiring diagrams)

Note:
1. Requester should submit one product type/ specification article per Request.
2. Requests for Addition do not constitute approval.
3. The applicable Technical Committee will evaluate requests and may require additional information prior to making a decision on the listing of the product.
4. Requests for Change of Listing should include reason for change, recommended listing, and any appropriate attachments.

FOR INTERNAL USE

Status of Request	Date
_____	_____
_____	_____
_____	_____
_____	_____

OUT TO BID

DESIGN GUIDELINES

1.0 CODES AND REGULATORY AGENCIES

2.0 PROJECT PROCEDURES

3.0 SUSTAINABILITY

4.0 SPECIAL INSTRUCTIONS TO DESIGNERS

5.0 SPECIAL BUILDING AREAS

6.0 TECHNICAL REQUIREMENTS

7.0 MASTER SPECIFICATIONS

8.0 PREFERRED MANUFACTURERS LIST

9.0 STANDARD DETAILS AND SCHEDULES

9.1 ARCHITECTURAL

9.2 MECHANICAL

9.3 ELECTRICAL

9.4 SITE/CIVIL

10.0 CHANGES TO DESIGN GUIDELINES

9.0 STANDARD DETAILS AND SCHEDULES

Standard Details express typical University requirements, and thus should be used in place of the equivalent A/E detail. Professional judgement is required to make Standard Details project specific.

For University of Michigan Hospitals and Health Centers (UMHHC) funded projects, click here for a list of T echnical Requirements specific to work at UMHHC.

9.1 Architectural

9.2 Mechanical

9.3 Electrical

9.4 Site/Civil

© 2018 Regents of the University of Michigan
Design by Michigan Creative

326 East Hoover, Ann Arbor, MI 48109-1002
Phone: (734) 763-3020
Contact Us

OUT TO BID

DESIGN GUIDELINES

1.0 CODES AND REGULATORY AGENCIES

2.0 PROJECT PROCEDURES

3.0 SUSTAINABILITY

4.0 SPECIAL INSTRUCTIONS TO DESIGNERS

5.0 SPECIAL BUILDING AREAS

6.0 TECHNICAL REQUIREMENTS

7.0 MASTER SPECIFICATIONS

8.0 PREFERRED MANUFACTURERS LIST

9.0 STANDARD DETAILS AND SCHEDULES

9.1 ARCHITECTURAL

9.2 MECHANICAL

9.3 ELECTRICAL

9.4 SITE/CIVIL

10.0 CHANGES TO DESIGN GUIDELINES

9.1 ARCHITECTURAL

Architectural Design Details, Schedules and T ables		
SBA 5.5 Proposed Layout Custodial Room	January 2018	PDF
SBA 5.5 Proposed Layout Custodial Suite	January 2018	PDF

© 2018 Regents of the University of Michigan
Design by Michigan Creative

326 East Hoover, Ann Arbor, MI 48109-1002
Phone: (734) 763-3020
Contact Us

OUT TO BID

DESIGN GUIDELINES

1.0 CODES AND REGULATORY AGENCIES

2.0 PROJECT PROCEDURES

3.0 SUSTAINABILITY

4.0 SPECIAL INSTRUCTIONS TO DESIGNERS

5.0 SPECIAL BUILDING AREAS

6.0 TECHNICAL REQUIREMENTS

7.0 MASTER SPECIFICATIONS

8.0 PREFERRED MANUFACTURERS LIST

9.0 STANDARD DETAILS AND SCHEDULES

9.1 ARCHITECTURAL

9.2 MECHANICAL

9.3 ELECTRICAL

9.4 SITE/CIVIL

10.0 CHANGES TO DESIGN GUIDELINES

9.2 MECHANICAL

Mechanical Design Details, Schedules and Tables				
Water Softener for Boilers System Schematic	November 2005	PDF	Microstation	AutoCAD
R.O. Make – up System for Clean Steam Humidification System	November 2005	PDF	Microstation	AutoCAD
High Purity Water System Schematic	November 2005	PDF	Microstation	AutoCAD
15060 Basic Piping Materials & Methods				
Piping System Pressure Test Table	December 2009	PDF	Microstation	AutoCAD
15100 Valves				
15100 02 11 09 – DHW Valve Installation Detail	December 2009	PDF	Microstation	AutoCAD
15125 – Expansion Joint Schedule	March 2008	PDF	Microstation	AutoCAD
15125 – Expansion Joint Installation Detail	March 2008	PDF	Microstation	AutoCAD
15125 – Expansion Joint Detail Domestic Hot Water	March 2008	PDF	Microstation	AutoCAD
15125 – Expansion Joint Detail LPS, HPS and LPC	March 2008	PDF	Microstation	AutoCAD
15130001 – Thermometer Installation Detail	June 2006	PDF	Microstation	AutoCAD
15130002 – Pressure Gauge Detail	June 2006	PDF	Microstation	AutoCAD
15160001 – End Suction Pump Installation Detail	November 2012	PDF	Microstation	AutoCAD
15160002 – Pump Base Installation Detail	November 2012	PDF	Microstation	AutoCAD
15160003 – Vertical Split Case Pump Installation Detail	November 2012	PDF	Microstation	AutoCAD
15160004 – In-Line Pump	November	PDF	Microstation	AutoCAD

	2012			
15188001 – Steam Boiler Water Treatment Schematic	June 2006	PDF	Microstation	AutoCAD
15189001 – Closed System Shot Feeder Detail	September 2012	PDF	Microstation	AutoCAD
15189002 – Glycol Feed System Detail	September 2012	PDF	Microstation	AutoCAD
1518903 – Closed System Make-Up Detail	November 2012	PDF	Microstation	AutoCAD
15250001 – Blanket Fiberglass Insulation Detail	December 2003	PDF	Microstation	AutoCAD
15300 001 – Fire Service System Detail	February 2014	PDF	Microstation	AutoCAD
15320 001 – Fire Pump System Detail	March 2013	PDF	Microstation	AutoCAD
15411 001- Domestic Water Service System Detail	March 2013	PDF	Microstation	AutoCAD
15515002 – Automatic Water System Air Vent Detail	October 2015	PDF	Microstation	AutoCAD
15515011 – Coalescing Separator and Floor MountedExpansion Tank Detail	November 2012	PDF	Microstation	AutoCAD
15525 Steam Specialties				
D 15525 05 11 09 – Bucket Steam Trap Assembly Detail	December 2009	PDF	Microstation	AutoCAD
D 15525 01 11 09 – F&T Steam Trap Assembly Detail	December 2009	PDF	Microstation	AutoCAD
15558001 – Steam Boiler Schedule	March 2004	PDF	Microstation	AutoCAD
15559001 – Preheat Boiler Feed Unit and Pump Schedule	March 2004	PDF	Microstation	AutoCAD
15635001 – Refrigerant Monitor Control Diagram	August 2015	PDF	Microstation	AutoCAD
15684001 – Electric Drive Water Cooled Chiller Piping Schematic	March 2016	PDF	Microstation	AutoCAD
15684001 – Electric Water Cooled Centrifugal/Screw/Scroll Chiller Schedule	November 2012	PDF	Microstation	AutoCAD
15684002 – Air Cooled Chiller Schedule	November 2012	PDF	Microstation	AutoCAD
15710 Cooling Towers				
15710001 – Cooling Tower LPS Piping Detail	June 2008	PDF	Microstation	AutoCAD
15710003 – Cooling Tower Schedule	December 2008	PDF	Microstation	AutoCAD
15710004 – Seasonal Tower Piping Detail	June 2008	PDF	Microstation	AutoCAD
15710010 – Condenser Water Treatment Equipment Diagram	June 2013	PDF	Microstation	AutoCAD

(Bromine Method)				
15820001 – Hot Water Heating Coil Detail 2-Way Control Valve	June 2006	PDF	Microstation	AutoCAD
15820002 – Hot Water Heating Coil Detail 3-Way Control Valve	June 2006	PDF	Microstation	AutoCAD
15820101 – Chilled Water Cooling Coil Detail 3-Way Control Valve	June 2006	PDF	Microstation	AutoCAD
15820102 – Chilled Water Cooling Coil Detail 2-Way Control Valve	June 2006	PDF	Microstation	AutoCAD
15820201 – Steam Heating Coil	June 2003	PDF	Microstation	AutoCAD
15830001 – Draw-Thru Coil Condensate Drain	July 2009	PDF	Microstation	AutoCAD
15830101 – Duct-Mounted Reheat Coil – Hot Water Heating Piping Connections	July 2009	PDF	Microstation	AutoCAD
15830102 – Blow-Thru Coil Condensate Drain	July 2009	PDF	Microstation	AutoCAD
15851101 – Fan Coil Unit Installation Detail	July 2009	PDF	Microstation	AutoCAD
15890001 Sample Duct Construction Schedule	August 2011	PDF	Microstation	AutoCAD
15895001 Sample Damper Construction Schedule	August 2011	PDF	Microstation	AutoCAD
15896001 – Supply Air TAU Clearance Detail	May 2009	PDF	Microstation	AutoCAD
15910001 – Supply Air LTAU Clearance Detail	September 2008	PDF	Microstation	AutoCAD
15910002 – Laboratory DDC Architecture and Scope of Work	June 2016	PDF	Microstation	AutoCAD
15910001 – Laboratory Terminal Airflow Units Sample Schedules	September 2008	PDF	Microstation	
15975001 – Differential Pressure Transmitter Installation Detail (Liquid)	June 2006	PDF	Microstation	AutoCAD
15975002 – Typical DDC Panel Assembly	June 2006	PDF	Microstation	AutoCAD
Tunnel Toolkit				
Title Block (reference)	April 2015	PDF	Microstation	AutoCAD
Tunnel Kit Coversheet	April 2015	PDF	Microstation	AutoCAD
m101 (reference 1)	April 2015	PDF	Microstation	AutoCAD
t101 (reference 2)	April 2015	PDF	Microstation	AutoCAD
TK – 1	April 2015	PDF	Microstation	AutoCAD
TK – 02	April 2015	PDF	Microstation	AutoCAD
TK – 03	April 2015	PDF	Microstation	AutoCAD
TK – 04A	April 2015	PDF	Microstation	AutoCAD
TK – 04B	April 2015	PDF	Microstation	AutoCAD
TK – 05	April 2015	PDF	Microstation	AutoCAD
TK – 06	April 2015	PDF	Microstation	AutoCAD
TK – 07	April 2015	PDF	Microstation	AutoCAD

TK – 08	April 2015	PDF	Microstation	AutoCAD
TK – 09	April 2015	PDF	Microstation	AutoCAD
TK-12 Tunnel Temporary Shoring Detail	December 2014	PDF	Microstation	AutoCAD
MD 235716 001 Critical Steam to Water Heat Exchanger P & ID	February 2016	PDF	Microstation	AutoCAD
MD 235716 002 Non-Critical Steam to Water Heat Exchanger P & ID	February 2016	PDF	Microstation	AutoCAD
MD 235716 003 Steam to Water Heat Exchanger Piping Detail	February 2016	PDF	Microstation	AutoCAD

© 2018 Regents of the University of Michigan
Design by Michigan Creative
326 East Hoover, Ann Arbor, MI 48109-1002
Phone: (734) 763-3020
Contact Us

OUT TO BID

DESIGN GUIDELINES

1.0 CODES AND REGULATORY AGENCIES

2.0 PROJECT PROCEDURES

3.0 SUSTAINABILITY

4.0 SPECIAL INSTRUCTIONS TO DESIGNERS

5.0 SPECIAL BUILDING AREAS

6.0 TECHNICAL REQUIREMENTS

7.0 MASTER SPECIFICATIONS

8.0 PREFERRED MANUFACTURERS LIST

9.0 STANDARD DETAILS AND SCHEDULES

9.1 ARCHITECTURAL

9.2 MECHANICAL

9.3 ELECTRICAL

9.4 SITE/CIVIL

10.0 CHANGES TO DESIGN GUIDELINES

9.3 ELECTRICAL

Electrical Standard Details	Last Updated	PDF	Microstation	AutoCAD	IES
26051301 – Aluminum Wire Terminations	April 2014	PDF	Microstation	AutoCAD	
26051302 – Aluminum Conductor Option	April 2014	PDF	Microstation	AutoCAD	
26052601 – Ground Bus Detail	November 2013	PDF	Microstation	AutoCAD	
26052602 – Isolated Ground Receptacle Wiring Diagram-alt	March 2014	PDF	Microstation	AutoCAD	
26052603 – Transformer Pad Grounding Detail-alt	March 2014	PDF	Microstation	AutoCAD	
26052604 – Manhole Grounding	April 2014	PDF	Microstation	AutoCAD	
26052605 – Power Manole Grounding With Non-metallic Racks	March 2014	PDF	Microstation	AutoCAD	
26052606 – Typical Column Grounding Detail	March 2014	PDF	Microstation	AutoCAD	
26052607 – Ground Bus Detail Telcom	March 2014	PDF	Microstation	AutoCAD	
26052608 – Power Manhole For High Water Table Grounding With Non-metalic Racks	March 2014	PDF	Microstation	AutoCAD	
26053301 – Conduit Penetration Thru Existing Floor	April 2014	PDF	Microstation	AutoCAD	
26053302 – Conduit Penetration Thru New Floor	April 2014	PDF	Microstation	AutoCAD	
26053303 – Hilti Conduit Penetration	April 2014	PDF	Microstation	AutoCAD	
26053304 – Conduit Penetration Thru Existing Roof	April 2014	PDF	Microstation	AutoCAD	
26053305 – Conduit Penetration Thru Roof	April 2014	PDF	Microstation	AutoCAD	
26053306 – Conduit Penetration Thru New Roof	April 2014	PDF	Microstation	AutoCAD	

BUILDING COMMISSIONING
CONTRACTS & AGREEMENTS
CONTRACTOR RESOURCES
OTHER LINKS

26053307 – New Conduit Thru New Membrane Roof	April 2014	PDF	Microstation	AutoCAD
26053308 – Existing Conduit Thru New Membrane Roof	April 2014	PDF	Microstation	AutoCAD
26053309 – Conduit Roof Support	April 2014	PDF	Microstation	AutoCAD
26053310 – Conduit Wall Penetration	April 2014	PDF	Microstation	AutoCAD
26053311 – Conduit Penetration Thru Interior Wall	April 2014	PDF	Microstation	AutoCAD
26053312 – Bench & Wall Plugmold Detail	April 2014	PDF	Microstation	AutoCAD
26053313 – Dual Channel Raceway Installation	February 2015	PDF	Microstation	AutoCAD
26053314 – Dual Channel Surface Raceway	April 2014	PDF	Microstation	AutoCAD
26053315 – Metallic Raceway With Modular Furniture Feed	February 2015	PDF	Microstation	AutoCAD
26053316 – Dual Channel Faceplate Installation	April 2014	PDF	Microstation	AutoCAD
26053317 – Benchtop Vertical Raceway Power	April 2014	PDF	Microstation	AutoCAD
26053318 – Benchtop Vertical Raceway Data	April 2014	PDF	Microstation	AutoCAD
26053319 – End Of Bench Vertical Raceway	April 2014	PDF	Microstation	AutoCAD
26053320 – Dual Channel Non-metallic Raceway	April 2014	PDF	Microstation	AutoCAD
26053321 – Dual Channel Non-metallic Raceway	April 2014	PDF	Microstation	AutoCAD
26053322 – Non-metallic Surface Raceway	April 2014	PDF	Microstation	AutoCAD
26053323 – Wire Harness	April 2014	PDF	Microstation	AutoCAD
26053324 – Ceiling Mounted Speaker	April 2014	PDF	Microstation	AutoCAD
26053325 – Hanging Receptacle	April 2014	PDF	Microstation	AutoCAD
26053328 – Wall Mtd Ups Recep Pnl Detail	April 2014	PDF	Microstation	AutoCAD
26053329 – Power Furniture Interface Detail	April 2014	PDF	Microstation	AutoCAD
26053330 – Cable Tray Mounting Detail	April 2014	PDF	Microstation	AutoCAD
26053331 – Aluminum Indoor Cable Tray Clamping Detail	April 2014	PDF	Microstation	AutoCAD
26053332 – Center Hung Cable Tray	April 2014	PDF	Microstation	AutoCAD
26053333 – Cable Tray Penetration Through Fire Rated Wall	April 2014	PDF	Microstation	AutoCAD

26053334 – Tray Mounted Raceway	April 2014	PDF	Microstation	AutoCAD
26053335 – Fumehood Electrical Service Detail	April 2014	PDF	Microstation	AutoCAD
26053336 – Walk-in Fumehood Electrical Service Detail	April 2014	PDF	Microstation	AutoCAD
26053337 – Island Bench Detail	April 2014	PDF	Microstation	AutoCAD
26053338 – Window Ac Unit Electrical Detail	April 2014	PDF	Microstation	AutoCAD
26053339 – Power-telephone & Data Cable Connections	April 2014	PDF	Microstation	AutoCAD
26053340 – Av Raceway Detail	April 2014	PDF	Microstation	AutoCAD
26053341 – Power Pole Detail	April 2014	PDF	Microstation	AutoCAD
26053342 – Vertical Raceway For Existing Walls	April 2014	PDF	Microstation	AutoCAD
26054301 – Underground Power Duct Sections	July 2014	PDF	Microstation	AutoCAD
26054302 – Underground Telecommunication Duct Sections	April 2014	PDF	Microstation	AutoCAD
26054303 – Duct Bank Spacer & Reinforcing Details	April 2014	PDF	Microstation	AutoCAD
26054304 – 10x10x7 Pre-cast Power Manhole	April 2014	PDF	Microstation	AutoCAD
26054305 – 12x5x6-6 Pre-cast Telecommunications Manhole	April 2014	PDF	Microstation	AutoCAD
26054306 – 8-8×8-8×7 Pre-cast Power Manhole	April 2014	PDF	Microstation	AutoCAD
26054307 – 8x4x6 Pre-cast Telecommunications Manhole	April 2014	PDF	Microstation	AutoCAD
26054308 – Detroit Edison Manhole	April 2014	PDF	Microstation	AutoCAD
26054309 – Neck & Cover Details For Cast In Place Manholes	April 2014	PDF	Microstation	AutoCAD
26054310 – Angle Entrance Detail At Manholes	April 2014	PDF	Microstation	AutoCAD
26054311 – Duct Reinforcing At Manholes-vaults-buildings	April 2014	PDF	Microstation	AutoCAD
26054312 – Cable Support Detail Within Power Manholes	April 2014	PDF	Microstation	AutoCAD
26054313 – Cable Support Detail Within Power Manholes	April 2014	PDF	Microstation	AutoCAD
26054314 – 4x4x4 Pre-cast Itcs Handhole	April 2014	PDF	Microstation	AutoCAD
26054316 – Trench Detail	April 2014	PDF	Microstation	AutoCAD
26054317 – Post Mounted Underground Service	April 2014	PDF	Microstation	AutoCAD
26054319 – Power Manhole Bell	April 2014	PDF	Microstation	AutoCAD

End Installation				
26054320 – Orangeburg To Pvc Transition	April 2014	PDF	Microstation	AutoCAD
26054321 – Casing Details With Sled	April 2014	PDF	Microstation	AutoCAD
26054322 – 8x6x7 Pre-cast Telecommunications Manhole	April 2014	PDF	Microstation	AutoCAD
26054323 – Miss Dig	April 2014	PDF	Microstation	AutoCAD
26110001 – Single Ended Substation	April 2014	PDF	Microstation	AutoCAD
26110002 – Double Ended Substation	April 2014	PDF	Microstation	AutoCAD
26110003 – Substation Fire Pump Disconnect	April 2014	PDF	Microstation	AutoCAD
26110004 – Maintenance Back Feed Tap Box	April 2014	PDF	Microstation	AutoCAD
26110005 – Concrete Equipment Pad	April 2014	PDF	Microstation	AutoCAD
26110006 – Switch Anchoring Detail	April 2014	PDF	Microstation	AutoCAD
26110007 – Leveling Channel Detail	April 2014	PDF	Microstation	AutoCAD
26200001 – Service Entrance Transformer Wiring Diagram	April 2014	PDF	Microstation	AutoCAD
26200002 – Step Down Transformer Wiiring Diagram	April 2014	PDF	Microstation	AutoCAD
26200003 – Panel Naming Procedure	April 2014	PDF	Microstation	AutoCAD
26272603 – Ceiling Mounted Receptacle Detail	April 2014	PDF	Microstation	AutoCAD
26290001 – Mcc One Line Diagram	April 2014	PDF	Microstation	AutoCAD
26290002- Control Wiring Diagram	April 2014	PDF	Microstation	AutoCAD
26290003 – Motor Control Center Installation Det	April 2014	PDF	Microstation	AutoCAD
26510001 – Exit Sign Mounting Detail	April 2014	PDF	Microstation	AutoCAD
26510002 – Student Exit Sign Mounting Detail	April 2014	PDF	Microstation	AutoCAD
26510003 – Surface Or Hanging Emergency Lighting Fixture	April 2014	PDF	Microstation	AutoCAD
26510004 – Elevator Shaft Lighting	April 2014	PDF	Microstation	AutoCAD
26510005 -recessed Can Emergency Lighting Fixture	April 2014	PDF	Microstation	AutoCAD
26510006 – Emergency Light Battery Exerciser	April 2014	PDF	Microstation	AutoCAD
26510007 – Inner Lamp Switch	April 2014	PDF	Microstation	AutoCAD

Dim Detail (type F) F Fixtures				
26510008 – Cable Way- Hallway Cove Light Detail	April 2014	PDF	Microstation	AutoCAD
26510009 – Elevator Shaft Lighting	April 2014	PDF	Microstation	AutoCAD
26510010 – Recessed Emergency Lighting Fixture	April 2014	PDF	Microstation	AutoCAD
26510011 – Schematic For Os F (lights- Hvac Fcu)	April 2014	PDF	Microstation	AutoCAD
26510012 – Schematic For Os S (lights Hvac Fcu Dual)	April 2014	PDF	Microstation	AutoCAD
26510013 – Schematic For Os F (lights- Hvac)	April 2014	PDF	Microstation	AutoCAD
26510014 – High Bay Fixture Mounting	April 2014	PDF	Microstation	AutoCAD
26510015 – Cove Light Mounting Detail	April 2014	PDF	Microstation	AutoCAD
26560001 – Metal Halide Site Light Schedule	May 2015	PDF	Microstation	AutoCAD
26560002 – Riser For Site Lighting Power Source	April 2014	PDF	Microstation	AutoCAD
26560003 – Pedestrian Pole Base Against Seatwall	April 2014	PDF	Microstation	AutoCAD
26560004 – Site Lighting Trench Detail	May 2015	PDF	Microstation	AutoCAD
26560005 – Underground Sleeve Detail	April 2014	PDF	Microstation	AutoCAD
26560006 – Typical Pole Wiring Detail	May 2015	PDF	Microstation	AutoCAD
26560007 – Single Globe Unit	May 2015	PDF	Microstation	AutoCAD
26560008 – Double Globe Unit	May 2015	PDF	Microstation	AutoCAD
26560009 – Five Globe Unit	May 2015	PDF	Microstation	AutoCAD
26560010 – Street Light Fixture Detail	May 2015	PDF	Microstation	AutoCAD
26560011 – Pedestrian Light Pole Base In Pavement	April 2014	PDF	Microstation	AutoCAD
26560012 – Pedestrian Light Pole Base In A Seatwall	April 2014	PDF	Microstation	AutoCAD
26560013 – Pedestrian Light Pole Base In Lawn	April 2014	PDF	Microstation	AutoCAD
26560014 – Parking Lot Fixture Detail	May 2015	PDF	Microstation	AutoCAD
26560015 – Pole Base Detail For Walkway Lighting	April 2014	PDF	Microstation	AutoCAD
26560016 – Pedestrian Light Wall Mounted	May 2015	PDF	Microstation	AutoCAD
26560017 – Pedestrian Pole Base Plan View	April 2014	PDF	Microstation	AutoCAD

26560018 – Musco Electrical Enclosure Detail	April 2014	PDF	Microstation	AutoCAD
26560019 – Musco Base & Pole Electrical Detail	April 2014	PDF	Microstation	AutoCAD
26560020 – Musco Pole Top Assembly Electrical Detail	April 2014	PDF	Microstation	AutoCAD
26560021 – Slipfitter Mtd Detail	May 2015	PDF	Microstation	AutoCAD
26560022 – Wall Mounting Detail	May 2015	PDF	Microstation	AutoCAD
26560024 – Riser For Building-Mounted Exterior Lighting Power Source	May 2015	PDF	Microstation	AutoCAD
26560025 – Pedestrian Top Wall	May 2015	PDF	Microstation	AutoCAD
26560026 – Pedestrian Top Wall	April 2014	PDF	Microstation	AutoCAD
26560027 – Parking Lot Fixture Schedule Update	April 2014	PDF	Microstation	AutoCAD
27200001 – Bldg Elevation Telecommunication Rm Arrangements	April 2014	PDF	Microstation	AutoCAD
27200002 – Elevation Communication Detail	April 2014	PDF	Microstation	AutoCAD
27200003 – Telcom Rack Power Detail	April 2014	PDF	Microstation	AutoCAD
27200005 – Typ UM Emergency Phone Kiosk	November 2014	PDF	Microstation	AutoCAD
27200006 – Emergency Phone Freestanding	November 2014	PDF	Microstation	AutoCAD
27200007 – Emergency Phone Wall Mount	November 2014	PDF	Microstation	AutoCAD
27200008 – Mounting of #293SL Telephone	November 2014	PDF	Microstation	AutoCAD
27200009 – Area of Refuge two-way comm system	December 2014	PDF	Microstation	AutoCAD
28130001 – Typ Raceway Installation At Single Door With Electric Strike	April 2014	Request from Design Manager		
28130002 – Typ Raceway Installation At Single Door With Electric Moritse Device	April 2014	Request from Design Manager		
28130003 – Typ Raceway Installation At Single Door With E-type Electric Panic Device	April 2014	Request from Design Manager		
28130004 – Typ Raceway Installation At Single Door With El-type Electric Panic Device	April 2014	Request from Design Manager		
28130006 – Typ Raceway Installation At Double Door With El-type Electric Panic Device	April 2014	Request from Design Manager		
28130007 – Control Wiring For Door Hold Opens	April 2014	Request from Design Manager		

28130008 – Typ Raceway Installation At Doors With Monitoring Sensor	April 2014	Request from Design Manager		
28130009 – Typ Raceway At Single Fire Rated Door	April 2014	Request from Design Manager		
28130010- Card Reader And Door Actuator Mounting	April 2014	Request from Design Manager		
28130011 – Typ Raceway Installation At Door Hold Open Devices	April 2014	Request from Design Manager		
28130012 – Card Reader Pedestal Detail	April 2014	Request from Design Manager		
28130013 – Installation For Main 1st Card Reader Panel Assembly In Bldg	April 2014	Request from Design Manager		
28130014 – Ncrc Single Door W Elec Mortice	April 2014	Request from Design Manager		
28160015 – Moscad Rtu Electrical Detail	April 2014	PDF	Microstation	AutoCAD
28160016 – Audio System Block Diag (classrm Hearing Assist)	April 2014	PDF	Microstation	AutoCAD
28160017 – Hearing Assist Antenna(classrm Hearing Assist)	April 2014	PDF	Microstation	AutoCAD
28310001 – Duct Smoke Detector Installation	April 2014	PDF	Microstation	AutoCAD
28310004 – Riser For Hearing Impaired Strobe Detail #3	April 2014	PDF	Microstation	AutoCAD
28310005 – Smoke Det Interface Conn Temp Controls	April 2014	PDF	Microstation	AutoCAD
28310006 – Smoke Det Interface Addressable System	April 2014	PDF	Microstation	AutoCAD
28310007 – Smoke Det Interface Hardwired System	April 2014	PDF	Microstation	AutoCAD
28310008 – Smoke Det Interface No Fire Alarm System	April 2014	PDF	Microstation	AutoCAD
28310009 – Overall Interconnection Diagram	April 2014	PDF	Microstation	AutoCAD
28310010 – Elevator Recall Control Wiring	September 2014	PDF	Microstation	AutoCAD
28310011 – Elevator Recall Control Program Matrix	September 2014	PDF	Microstation	AutoCAD
28310012 – Elevator Recall Control Schematic Diagram	September 2014	PDF	Microstation	AutoCAD

© 2018 Regents of the University of Michigan

OUT TO BID

DESIGN GUIDELINES

1.0 CODES AND REGULATORY AGENCIES

2.0 PROJECT PROCEDURES

3.0 SUSTAINABILITY

4.0 SPECIAL INSTRUCTIONS TO DESIGNERS

5.0 SPECIAL BUILDING AREAS

6.0 TECHNICAL REQUIREMENTS

7.0 MASTER SPECIFICATIONS

8.0 PREFERRED MANUFACTURERS LIST

9.0 STANDARD DETAILS AND SCHEDULES

10.0 CHANGES TO DESIGN GUIDELINES

BUILDING COMMISSIONING

CONTRACTS & AGREEMENTS

10.0 CHANGES TO DESIGN GUIDELINES

This section lists the changes made to Design Guidelines each month.

March 2018

Master Specifications
MS226313 Medical Gas Certification – March 23, 2018
Description of changes: Modified acceptable certifiers, deleted Pneumatic Medical, added Gassy Girl. Clarified certification report requirements.

Technical Sections
DG088000 Glazing – March 9, 2018
Added: “Design shall allow option for maximum of one treatment per glazing surface, ie. low e coating and frit on different surfaces.”
Removed: “For quality control purposes, include a restriction that each type of exterior glass must be supplied by a single manufacturer and fabricator.”
Special Instructions T o Designers
DG 4.7 Building Access Control – March 9, 2018
section: Interior Doors
Required location (for card reader)
added Reflection Rooms.

February 2018

Master Specification – Civil

MS334100 – Storm Utility Drainage – February 7, 2018
New. Base civil specification for editing

January 2018

Master Specifications – Architectural

MS028213 Asbestos Remediation – January 11, 2018
MS028214 Asbestos Remediation – Floor Tile and Mastic – January 11, 2018
MS028215 Asbestos Remediation – Roofing Material – January 11, 2018

CONTRACTOR RESOURCES

OTHER LINKS

Modifications: Global Green Service Group has been added to the list of pre-qualified abatement firms

Master Specifications – Mechanical

MS220523 Valves – January 31, 2018

Change: The Jomar ball valve model number has been updated to reflect a new model number. The valve is the exact same valve as the previous model including materials. Jomar only changed the model number because the valve has additional listings.

Note that Jomar is the only de-zinc resistant brass alloy ball valve that is approved, other approved ball valves are bronze.

Standard Details – Civil

MDOT Sidewalk Ramp R028J – January 11, 2018
Posted the sidewalk ramp PDF instead of the MDOT reference on the Web for better clarity on UM ramp preferences.

Special Building Areas

5.5 Custodial Support Space and Infrastructure – January 4, 2018
Complete re-write.

Standard Details – Architectural

SBA 5.5 Proposed layout Custodial Room – January 4, 2018
SBA 5.5 Proposed layout Custodial Suite – January 4, 2018

Complete re-write.

December 2017

Project Procedures

Design Professional Cost Benchmarking Submission spreadsheet linked from DG2.5 Project Estimates – December 8, 2017
The form has been updated to include an area to provide the breakdown of GSF as new and/or renovated and the Project Data Sheets have been simplified.

Technical Sections

DG220553 Mechanical Identification and Painting – December 5, 2017

There was a major revision to the Design Guideline.
The Master Specification was revised to contain most of the requirements previously in the Design Guideline.
The Design Guideline now requires the masterspec to be used as basis for specification.

Master Specifications

MS042010 Unit Masonry Assemblies (Limited applications) – December 4, 2017

- Added identification requirements for rated walls

MS092116 Gypsum Board Assemblies – December 4, 2017

- Added identification requirements for rated walls

MS099100 Painting – December 4, 2017

- Added prohibition of products including isocyanate compound (used in some dry erase paints). Includes hidden text directing designers to include to coordination with EHS and specify requirements for mechanical local exhaust ventilation, air monitoring, respiratory protection, and adequate cure time before re-occupancy.

November 2017

Special Building Areas

DG 5.10 Gender Inclusive Rooms – November 27, 2017

Added the option to use room name “Gender Inclusive Restroom” on the room sign. This change is being proposed based on collaboration with the Spectrum Center and the Office of Institutional Equities.

Technical Sections

DG 101400 Signage – November 27, 2017

Updated appendix A to reflect the option noted above to name single occupant rooms as either the room type (e.g. Restroom, Locker Room, Shower Room) or include the description “Gender Inclusive” in addition to the room type (e.g Gender Inclusive Restroom, etc). There were no changes to the text of the written portion of the design guideline document.

DG 095100 Acoustical Ceilings – November 27, 2017

Changes include recommending metal vertical transitions that match ceiling grid.

Vertical application of acoustical ceiling tile is not allowed.

Master Specifications

MS087100 Door Hardware – November 8, 2017

- Model numbers added for oversize ADA thumbturns from all manufacturers
- Mechanical and standalone digital lockset model numbers updated to reflect product changes
- Access control lockset model numbers updated to include request to exit and integral door position switch

Sustainability

DG 3.1 Sustainable Design and LEED Requirements – November 6, 2017

Revised LEED requirements and references to LEED version 2009

DG 3.2 Energy and Water Conservation – November 6, 2107

Revised energy code version, ASHRAE 90.1 stretch goal requirements and references to ASHRAE 90.1-2007+30

3.2.2 Energy and Water Conservation Report Format – Projects Over $10M – November 6, 2017
Revised to remove references to the previous ASHRAE 90.1-2007 +30 mandate

Codes and Regulatory Agencies – November 2, 2017
Michigan Building Code Section 907.5.2.3 Visual Alarms.

Add Exception 4. In other than Group I occupancies and ambulatory care, visual alarms are not required in the following:

a) Offices less than 200 square feet.

b) Closets and coat rooms.

c) Electrical closets.

d) Mechanical pipe chases.

e) Crawl Spaces.

f) Small restrooms with access inside classrooms.

g) Custodial closets.

h) Storage rooms less than 200 square feet.

i) Unoccupied spaces.

Michigan Building Code Chapter 13 Energy Efficiency – Michigan Energy Code Part 10a rules incorporating the ASHRAE 90.1 2013 effective October 25, 2017

Joint Commission requirements added MM Accreditation staff to review.

For Leased Health Care Facilities added website.

Replaced Radiation Safety Section with the following per EHS:

State of Michigan Department of Licensing and Regulatory Affairs, MIOSHA–Radiation Safety Section / United States Nuclear Regulatory Commission All projects which include ionizing radiation-producing equipment or devices used for clinical or research use. All electronic equipment producing ionizing radiation must be registered with the Michigan Department of Licensing and Regulatory Affairs through EHS/Radiation Safety Service prior to initial use. Irradiators or other similar devices using or producing radioactive materials for clinical or research use will require licensing by the U.S. Nuclear Regulatory Commission in advance. Approvals for registration or licensing may also require submitting shielding construction plans for prior approval by MIOSHA–Radiation Safety Section or the U.S. Nuclear Regulatory Commission depending on the type of equipment used and nature of the facility. Contact EHS / Radiation Safety Service for assessment.

Added Buildings to BFS listing of classroom buildings as follows:
1651 Flint Harrison Parking Ramp *

5169 Biological Science Building
5266 NCRC 35 Auditorium/lobby *
5413 Trotter William Monroe Multicultural Center

Moved building 5102 from inpatient to outpatient

Changed the title of Ambulatory Surgery Centers to Hospital Outpatient Surgery Departments

October 2017

Preferred Manufacturers List

8.3 Mechanical PML – October 23, 2017
Changes:
Valves – High Performance Butterfly: Added ABZ
Added: Valves – High Performance Metal-to-Metal Seated Butterfly
Bray Trilok, Crane Flowseal MS, Metso/Neles Neldisc, Adams MAK, ABZ Extreme 6000 Series, Weir Tricentric, Zwick Tri-Con, Vanessa
Valves – Gate: Added Apollo
Valves – Swing Check: Added Apollo
Valves – Silent Check: Added Apollo
Removed: Valves – City Water Main (Ann Arbor)
Moved: Flexible Metal Hose Connectors (Stainless & Copper), Flexible Connectors (Rubber) from Section 221113 Piping Materials & Methods to Section 220548 – Vibration Control
Revised Vibration Isolators Manufacturers to match master specification.
Piping – Lab Waste and Vent (Polypropylene): Added Georg Fisher Fuseal
Moved: Valves – Safety Relief from Section 221113 Piping Materials & Methods to Section 232216 Steam and Condensate Piping Specialties.

Coalescing Separator: Added Thrush (Aar-O-Vent Dirt DSR & DHR)
Pumps – Double Suction – Base Mounted; End Suction – Close Coupled – Base Mounted; End Suction – Flexibly Coupled – Base Mounted, Added: Under Consideration Patterson
Pumps – Inline Circulators; In-Line Closed Coupled – Hanger Supported, Added: Wilo, Under Consideration Patterson
Air Handlers, Custom and Semi Custom: Added Ingenia
Floor Mounted Fan Coil Units (Un-Ducted): Added Price

Special Instructions to Designers
4.3.6 General Commissioning Procedures – October 13, 2017
Minor editorial changes to sample reports at the end of the design guideline. There is no cost or technical impact.

Master Specifications

220553 Mechanical Identification – October 4, 2017
Changes:

- Revised Scope of Work
- Revised approved manufacturers names

- Added identification of piping contents by temperature/pressure as necessary
- Added detectable non ferrous locator for plastic pipe labels
- Added additional Piping System, Ductwork and Valve identification locations
- Revised labels to align with the ANSI/AMSE A13.1 Standard
- Added more systems to be identified
- Table Formatting
- Additional label types (6) added for the hospital piping – October 27, 2017

261100 Unit Substations – October 3, 2017

Key revisions include:

- 1.2.A – clarification that substations should not include touch screen displays/interfaces
- Part 2 – added Siemens as an acceptable substation assembler
- 2.2.F – clarification on primary fuse sizing responsibilities
- 2.4.I – revamped section on the control of double-ended substations (including a detailed sequence of operations)
- 2.4.K.5 – updated the substation meter model number.

232513 Chemical Water Treatment – Closed Loop and 232516 – Chemical Water Treatment – Open Loop Systems – October 2, 2017
Removed GE water as approved CSP per Hydronics and Steam MTT due to poor service.

Technical Sections

283100 Fire Detection and Alarm – October 31, 2017
In September, the Building Code Committee approved the simplified alignment of the fire alarm strobe requirements between the Michigan Building Code and the Life Safety Code. In the "Visual Notification Appliances" section of DG 283100, building areas are identified as either requiring or not requiring a fire alarm strobe.

DG 3.1 Sustainable Design and LEED Requirements – October 10, 2017
Revised to: update exemption request procedure; clarify LEED Project Manager requirements

DG 3.2 Energy and Water Conservation – October 10, 2017
Revised to: update exemption request procedure

265100 Interior Lighting – October 2, 2107

- On page 4 of 8, per discussions with the Construction Cost Reduction team as well as Dave Comers, we added the requirement that lighting designers send a copy of their project lighting fixture schedules to each of our local major lighting representatives at the end of the Design Development phase. Our goal is to achieve more competitive pricing on lighting packages.

September 2017

Master Specifications

087100 Door Hardware – September 22, 2017

Privacy lockset (typically used for single occupant restrooms): Revised to change over-ride from keyed over-ride to coin turn over-ride

102800 Toilet and Bath Accessories – September 22, 2017

Electric Hand driers:

Removed discontinued product previously listed and added the following hidden text. “A&E is reviewing potential models for inclusion in this section. consider ADA compliance, noise, dry time, and air distribution pattern when selecting devices. User experience in other buildings have indicated that driers in the 80-90 dba range are too loud and some air distribution patterns cause maintenance problems on the adjacent walls.”

283100 Fire Detection and Alarm System – September 14, 2017
The revisions are:

1. Paragraph 2.1.A.1 (page 11) – deleted reference to Riverside Integrated Systems. There are other qualified installers of EST-3 fire alarm panels, so bids will be more competitive.
2. Paragraph 2.1.A (page 11) – added Notifier ONYX 3030 series as an equivalent fire alarm system. This update was previously made/approved in the PML list, so now the spec and design guidelines align.

Master specification Division 1 – September 5, 2017
Updated as follows:

- Contractor parking locations and language updated to match current typical locations
- F&O department names revised to match current names

Standard Details
4′ Diameter Precast Storm Manhole – September 5, 2017
The detail was updated to specify frame and covers.

August 2017

Project Procedures
2.8 Project Manual – August 30, 2017
Updated to match November 2016 version updated by Project Controls in Contractor Resources section.

Master Specifications

024119 Selective Demolition

028110 Regulated Construction Waste Remediation
028213 Asbestos Remediation
028214 Asbestos Remediation – Floor Tile and Mastic
028215 Asbestos Remediation – Roofing Material
028300 Lead Remediation
028333 Lead Remediation – Renovation, Repair and Painting in Child-Occupied Facilities and Target Housing
028400 PCB Remediation
Modifications: – August 10, 2017
All sections: OSEH has been updated for new name: EHS (Environment, Health & Safety)

220500 Common Work Results for Mechanical – August 8, 2017
Updated to no longer refer to the 2009 versions of the MPC and MMC, per the Plumbing and FP MTT.

230593 Testing Adjusting & Balancing (TAB) – August 2, 2017
Added requirement for I.D. labels on ceiling near VAV boxes (similar to current requirement for diffusers) per Plumbing MTT as requested by Hospital FPD.

July 2017

Technical Sections
New DG235000 Hot Water Heating Systems – July 11, 2017

Civil Master Specifications
New MS331100 – Water Distribution Piping – July 10, 2017
Adding New U-M utility specification to the standard specs.

Special Instructions to Designers
4.3.6 General Commissioning Procedures – July 1, 2017
The only change was to update the Plant training contact's name and email.

June 2017

Civil Master Specifications
New MS333100 – Sanitary Sewer – June 21, 2017

Civil Details
Add Water Main Details and Sanitary Sewer Details link to City of Ann Arbor Water Main Details – June 21, 2017
Link was accidentally deleted in January 2017 when all Civil Details were updated.

Codes and Regulatory Agencies – June 14, 2017
Update to University of Michigan Buildings that Contain Instructional Space, specifically to buildings, 5370 Jeff T. Blau Hall and 0137 Kresge Business Admin Library.

Project Procedures
New Pre-Design Deliverables Design Guideline 2.9 (spreadsheet) – June 14, 2017
As part of the deliverables for formal UM review at the end of Pre-Design phase, we

have compiled the Pre-Design Deliverables Design Guideline 2.9. This is similar to the Design Deliverables that are utilized during the SD, DD and CD phase of project development. The Pre-Design Deliverables have been compiled with input for multiple individuals that are involved in our project reviews and design process. Please note that each item on the list may not apply to every project. A column in the spreadsheet was included to note if required for the project, also date the item was received. The intent is to provide consistency and a guide for the design professionals when compiling Pre-Design Documents.

May 2017

Codes and Regulatory Agencies – May 23, 2017
Center for Medicare and Medicaid Services (CMS) information updated to reflect adoption of NFPA 101 (2012).
CMS requires facilities built before 2016 to comply with NFPA 101 (2012).

Master Specifications
230905 – MECHANICAL SYSTEMS CONTROLS (HOSPITAL PROJECTS) – May 19, 2017

A summary of the changes to this master specification include:

- Consistent with recent campus AEC changes to MS 230900, we've revised MS230905 to add constant volume venture (CVV) fume hood lab airflow controls (VAV fume hood labs airflow controls, including all other mechanical controls in the VAV fume hood lab, remains in MS230910)
- Added miscellaneous flow meter clarifications, including division of work associated with UM Utilities (again, consistent with recent AEC campus changes to MS230900)
- Added clarification to control demolition scope
- Added clarifications to the various Human Machine Interface (HMI) and Room Pressure Monitor requirements
- Changed reference of MCIT to HITS
- Clarified coordination requirements with UMH Systems Monitoring and Systems Integrator
- Modified submittal and project record requirements
- Added additional VAV terminal controller requirements
- Changes to DDC wiring requirements
- Added identification labelling requirements
- Clarified HITS network connection requirements
- Modified trending and alarm requirements

April 2017

Codes and Regulatory Agencies – April 25, 2017

Michigan Building Code updated from 2012 to 2015.
– Associated articles with MBC updated to reflect changes in 2015 edition.
Michigan Mechanical Code updated from 2012 to 2015.
Michigan Plumbing Code updated from 2012 to 2015.
Michigan Rehabilitation Code for Existing Buildings updated from 2012 to 2015.
International Fire Code updated from 2012 to 2015.
Under Michigan Residential Code, addition to include ASHRAE 2013.
Under State of Michigan Elevator Code '2010 Edition' added.
Edition of NFPA13 updated from 2010 to 2013.
Edition of NFPA72 updated from 2010 to 2013.
Edition of NFPA 90A updated from 2009 to 20212.
Building 5266 North Campus Research Complex Building 35 (Auditorium & Lobby) added under 'University of Michigan Buildings that Contain Instruction Space' as BFS.
Codes and Regulatory Agencies – April 11, 2017
The update is minor but includes:
Corrected NFPA 13 and NFPA 72 editions

March 2017

Preferred Manufacturers Lists
Electrical PML – March 31, 2017
The revisions include:

1. Under 260526 GROUNDING & BONDING FOR ELECTRICAL, we've added Harger Lightning & Grounding.
2. Under 261100 UNIT SUBSTATIONS, we've added Galco Industrial Electronics as an ABB distributor.
3. Under 262000 LOW VOLTAGE ELECTRICAL DISTRIBUTION, we've updated the company name of Ferraz-Shawmut to Mersen Electrical Power (company merger/acquisition).
4. Under 264100 FACILITIES LIGHTNING PROTECTION, we've added Harger Lightning & Grounding, and deleted Sleeping Bear Lightning Protection.
5. Under 265100 INTERIOR LIGHTING, we've added the contact information of four major, local, lighting reps. Direction is also given to the lighting designers to send their lighting fixture schedules to these four reps for recommended equivalents.
6. Under 283100 FIRE DETECTION & ALARM SYSTEMS, we're now allowing Notifier on all central campus projects, we've updated Simplex's name, and we've clarified that VESDA is now a subsidiary of Honeywell.

February 2017

Codes and Regulatory Agencies – February 15, 2017
Address for agencies updated.
Addition of Biosafety in Microbiological and Biomedical Laboratories (BMBL).

Master Specifications

220548 Vibration Control – February 22, 2017
Significant Revisions/Changes

220523 Valves – February 10, 2017
Added Approved MFRs: ABZ HP B'Fly, Apollo Gate/Globe/Check
Added Metal Seated High Performance Butterfly Valves, Model number spelled out for ABZ HP B'fly Valves
221113 Piping Materials & Methods – February 17, 2107
Added Approved MFRs: Apollo Xpress Fittings, Georg Fisher Fuseal Lab Waste & Vent, IPEX Enfield Dionized Water Piping.
Allow press isolation valves, strainers and check valves (2″ and below).
Removed flexible connectors (Added to MS220548).
Changed OSEH to EHS.

Technical Sections

Standard Details and Schedules
Referencing current MDOT ramp details to align with City ramp standards referencing MDOT. – February 10, 2017

MD 235716 001 Critical Steam to Water Heat Exchanger P & ID – February 6, 2017
MD 235716 002 Non-Critical Steam to Water Heat Exchanger P & ID – February 6, 2017
MD 235716 003 Steam to Water Heat Exchanger Piping Detail – February 6, 2017
We changed the schematic to have two steam to water heat exchangers details now – 001 is for a critical installation which has minor changes (detail name and removed all the "non" critical notes) compared to the existing posted detail. 002 is for Non Critical installation with the location of the pumps and separator is different from the critical detail, all the notes are for non critical installation. 003 – is the detail and schedules sheet – we removed all but one detail.

Technical Sections

101400 Signage – February 3, 2107
Major updates as follows:

- Signage characteristics and room identification updated to require the following:
  - International Symbol of Accessibility: added requirement to specify raised pictogram in lieu of flat. This was requested by Office of Institutional Equity.
  - For room types that have both gender specific and gender inclusive room (restrooms, locker rooms, shower rooms, etc), requirements were added for specific room names pictograms, and informational text that directs occupants to other facilities in a building.
  - Appendix A added to provide additional visual direction regarding signage standards for specific room type, particularly restrooms and other spaces that have both gender specific / gender inclusive rooms. These have been reviewed and approved by Spectrum Center and Office of Institutional Equity
  - Appendix B added to provide a lactation space pictogram that does not indicate gender. This has been approved by Work Life Resources.

January 2017

The following documents had global updates to nomenclature (OSEH now EHS, UPO now Campus Planning); updated links; the UPO storm water management manual has been removed and where applicable, the SEMCOG LID manual is referenced. – January 27, 2017
Special Instructions to Designers 4.4.1 Landscape Materials
Design Guideline 310000 Sitework
Design Guideline 312500 Soil Erosion and Sedimentation Control
Design Guideline 321000 Walks, Roads and Parking Paving
Master Specification 312500 Erosion and Sedimentation Controls

Master Specifications

232116 Hydronic Piping Specialties – January 30, 2017
Improved the specification for coalescing separators. Tracked version also attached.

232513 Chemical Water Treatment – Closed Loop – January 30, 2017
232516 – Chemical Water Treatment – Open Loop Systems – January 30, 2017
Added US Water as an approved Chemical Services Provider.

Project Procedures
2.2 Design Deliverables – January 24, 2017
Revised related to storm water management. The link in 2.2 Design Deliverables goes to a comprehensive procedure and all the associated documents. This is very similar to what we just did with the sanitary sewer mitigation procedure.
Minor revisions to various other related DGs to replace the UPO storm water best practices with the SEMCOG LID manual and to reflect recent nomenclature changes (OSEH now EHS, UPO to Campus Planning and removal of references to "Plant").

1.0 Codes and Regulatory Agencies – January 23, 2017
Update of Dormitory Code to NFPA 101 2012 and new rules effective Jan 6, 2017.
OSEH changed to EHS or Occupational Safety and Environmental Health changed to Environmental Health & Safety.
Hospital changed to Michigan Medicine.
Addition of Federal Aviation Administration (FAA).

Standard Details
9.4 Civil/Site Details – January 20, 2017
All details were updated to match current design guidelines and specifications. Civil Standard Detail Change Log.

December 2016

Master Specifications

MS010000 Division 01 General Requirements – December 21, 2016

- Section 012900 – Payment Procedures has been removed, it is now included in the Standard General Conditions.

- Project Commissioning section cross references updated.
- OSEH has been updated for new name: EHS (Environment, Health & Safety)

MS028213 Asbestos Remediation , MS028214 Asbestos Remediation – Floor Tile and Mastic , MS028215 Asbestos Remediation – Roofing Material – December 21, 2016

- OSEH has been updated for new name: EHS (Environment, Health & Safety)
- “National Salvage and Service Corporation” has been removed from the list of pre-qualified abatement firms, they are no longer an approved asbestos abatement company.

MS237213 Rotary Air-to-Air Energy Recovery Wheels – December 12, 2016
Add Innergytech and drop DRI due to DRI not being able to comply with the specification.
Updated to drop motors as a related section to allow wheel mfr.s to supply specialty motors that allow slow rotation the energy wheel when driven by a VFD. (Motors do not have to be from an MS 220513 “approved” motor mfr.)

MS226313 – Medical Gas Certification (For Hospital Funded Projects) – December 6, 2016
has been updated to reflect a change in an acceptable manufacturer.

Special Instructions to Designers
4.3.1 Design Phase Commissioning and 4.3.2 MEP Design Coordination – December 2, 2016
General updates to improve clarity, address LEED v4 requirements, add reference documents, improve format, etc.

4.3.3 Full Construction-Phase Commissioning – December 5, 2016
The only change was to update U-M’s water treatment coordinator’s name to new hire Nicholas Vanderkolk.

November 2016

Special Building Areas

5.4 Telecommunication Rooms – November 21, 2016
Revised mounting height of dedicated 120 volt duplex receptacles from 48″ AFF to 18″ AFF.

Technical Sections

220010 Plumbing Specialties – November 3, 2016
Added that small RO systems for improving drinking water quality are to be avoided, per the Plumbing and FP MTT.

Master Specifications

Division 1 General Requirements – November 3, 2016
Table of Contents revised to remove 019110, because that section no longer appears in the Div 1 spec.

October 2016

Technical Sections

088000 Glazing – October 20, 2016
Removed wired glazing.

230030 Lab Ventilation – October 17, 2016
The requirement that venturi style terminal air flow units be used for most lab applications has been eliminated except for labs containing VAV hoods or hoods with combination sashes. Instead, most labs can be served by conventional blade style terminal units which will result in considerable cost savings.

Other changes include:

Explanation of the U-M master spec changes due to the change to blade style terminal units.

All labs are to be equipped with a room differential pressure indicator so that room occupants can locally verify the direction of room pressurization This was felt necessary by the HVAC MTT given that blade style terminal units will now be used for most labs.

Added requirements for stack tip design.

Removed the requirement that chilled beams proposed for labs be approved by the U-M HVAC MTT.

Minor editorial changes.

Master Specifications

232123 Plumbing and Hydronic Pumps – October 20, 2016
Added section for small wet rotor ECM pumps.

220513 Motors – October 14, 2016
All motors operated by VFDs to be equipped with grounding rings. 100 HP and greater to have ceramic bearing on non-drive end. Per ad hoc motor failures committee: Arndt, Brabbs, Comers, Gramza, Girard, Karle, Krantz, Woldt. Note: ceramic bearing requirement may be modified in future after additional investigation complete.

Revised requirements for VFD driven motors. Dropped “rated for inverter duty”, replaced with more specific NEMA citations.

Sustainability
The U-M DG 3.1 Sustainable Design and LEED Requirements includes links to the following documents used on U-M LEED projects:

- Thermal Comfort Survey
- Thermal Comfort Action Plan

The two documents underwent the following minor revisions: October 6, 2016

- Survey revised to include room number as mandatory and a request for contact information (corrective action cannot occur unless specific area is identified).
- Action Plan revised to state that the CxA and Facilities will work together to provide appropriate action. (Previously it was stated that corrective action would occur when 20% of respondents were dissatisfied).

September 2016

Master Specifications

230910 VAV/Combination Sash Fume Hood Laboratory Controls-DDC – September 30, 2016
Changes: Improved wording regarding the work scope covered by the specification section, approved by the HVAC MTT.

Summary of changes September 21, 2016: The sections were updated to reference the current adopted NFPA 101 “Life Safety Code”, under submittal requirements for Affidavits of Compliance.

096813 – Tile Carpeting
096816 – Sheet Carpeting
098433 – Sound Absorbing Wall Units
099310 – Wood Floor Finish
095100 – Acoustical Ceilings
096466 – Wood Athletic flooring
096500 – Resilient Flooring
096723 – Resinous Flooring
102113 – Toilet Compartments
102239 – Folding Panel Partitions
101100 – Visual Display Units

Special Building Areas
5.11 Fire Command Center – September 21, 2016
Minor revisions

Project Procedures

2.5 Project Estimates – September 21, 2016
A new requirement was added for the Design Professional to complete a Project Data Sheet for each project that is benchmarked. The form name was changed and has been updated to include the new project data sheet.

2.2 Design Deliverables – September 16, 2016
Design Deliverables document updated to provide a link to supplemental information for the Design Professionals to use when they are calculating sanitary sewer offsets.

August 2016

Special Building Areas

SBA 5.10 Gender Inclusive Rooms – August 18, 2016

- Name changed from “Gender Inclusive Toilet / Locker Room” to “Gender Inclusive Rooms”
- Gender free facilities are required for all types of facilities separated by gender (restrooms, lockrooms, showers, etc…)

Preferred Manufacturers Lists

Electrical Preferred Manufacturers List – August 18, 2016

1. 281600 Closed Circuit TV Systems – deleted four listed camera manufacturers, and now references a much broader and compatible camera manufacturer list posted on the UM DPSS web site. This broader list ensures compatibility with DPSS’s Genetec headend and offers a more competitive bid.

Standard Details and Schedules

Adding typical wall details and jointing – designer is to adjust these so that they are structurally project specific. – August 10, 2016

- Concrete Seatwall
- Concrete Retaining Wall
- Wall jointing

Master Specifications

261100 Unit Substations – August 3, 2016
The updates include:

- Within 2.2.D.8 and .9, added door stays to prop open primary switch doors.
- Within 2.2.D.11 and .12, clarified the need for full height insulating barriers between the bus and the switch.
- Within 2.2.E.13, clarified the location of handle position switches.
- Moved paragraphs 2.2.F.5.a and .b into 2.2.D.12.
- Within 2.4.K, clarified the location of current transformers.

211313 Wet and Dry Pipe Sprinkler Systems – August 2, 2016
Eliminated requirement that dry pipe sprinkler piping be galvanized.

232116 Hydronic Piping Specialties – August 2, 2016
Added Thrush as approved mfr. of coalescing separators.

July 2016

Special Instructions to Designers

DG 4.3 Building Commissioning – July 28, 2016
DG 4.3.3 Full Construction-Phase Commissioning – July 28, 2016
DG 4.3.4 Reduced Scope Construction-Phase Commissioning – July 28, 2016
Updated Related Sections, no other changes.

DG 4.3.5 Commissioning Plan Procedure – July 28, 2016

This is a new DG formalizing the commissioning plan (manual) requirements that have been in place informally for many years.

- This procedure defines the process for developing and maintaining a commissioning (Cx) Plan. The Cx Plan is the document that outlines the project specific requirements and responsibilities of the Cx process. The Cx Plan also stores all validating documentation related to the Cx process.

DG 4.3.6 General Commissioning Procedures – July 28, 2016

This new DG covers the minimum commissioning requirements for conducting commissioning meetings, providing Cx reports, obtaining operation and maintenance (O&M) manuals for the Owner, and managing and conducting Owner training

Parts of 4.3.6 were previously covered by internal AEC procedures, these have been revised and will now apply to both internally and externally commissioned projects.

Technical Sections

075000 Roofing Systems and Accessories – July 14, 2016
Clarified and included electrical panels and equipment clearances heights above roofing materials.

Civil Design Details
Notes – Civil Standard – July 13, 2016
Update civil notes to reflect City of Ann Arbor input regarding watermain notes.

Preferred Manufacturers List

Electrical Preferred Manufacturers List – July 5, 2016

1. Under 260533 ELECTRICAL MATERIALS AND METHODS, we've updated a manufacturer name to MP Husky under ladder type tray and added Cope and MP Husky to wire basket tray.
2. Under 263000 ENGINE-GENERATOR SYSTEMS, we've deleted commentary that only belongs in the master specs (e.g. "…14 inches of water column…").
3. Under 283100 FIRE DETECTION & ALARM SYSTEMS, Siemens and National Time & Signal were added as manufacturers.

Master Specifications

Section 0284000 – PCB Remediation – July 14, 2016
Summary of changes: Added additional disposal requirement limiting the size of bagged or wrapped waste.
230900 Mechanical Systems Controls – July 1, 2016
Revised to include non-VAV fume hood labs
230910 VAV/Combination Sash Fume Hood Laboratory Controls-DDC – July 1, 2016
Revised for applicability only to VAV fume hood labs
233600 Air Terminal Units – July 1, 2016
Revised for sheet metal trade furnishing and installing constant flow venturi valves and accessories

June 2016

Project Procedures

2.4 Document Standards And Procedures For Project Deliverables (formerly 2.4 Drawing and Construction Document Standards) – June 27, 2016
2.4 Document Standards And Procedures For Project Deliverables has undergone a complete re-write.

- The guideline has been organized to follow the sequence of tasks for project delivery
- Guidelines describe the preferred format and information required for each document.
- General Project and Drawing/ CAD Standards,
- Titleblock content
- Room Numbering Assignment Procedure
- Procedure for submitting Bid and Construction Sets
- Record Documents, contents and procedures.

Codes and Regulatory Agencies – June 27, 2016

- Updated the State of Michigan Fire Safety Rules for Schools, Colleges, and Universities on page 8 from "(Filed December 13 1989) … NFPA 101 – Life Safety Code 1997)" to "((Filed May 19 2016) Effective June 20 2016) … NFPA 101 – Life Safety Code 2012)"
- Removed "0333 School of Nursing Building" from University of Michigan Buildings that Contain Child Care Space

Master Specifications

263000 Engine-Generator System – June 17, 2016

- In 2.1.A.3, deleted note regarding "up through 300 kW" for Generac Industrial Power. Generac has provided documents showing they now have factory certification on units beyond 300 kW. Also, this previous note was redundant with the requirement specified in 2.3.B.

283100 Fire Detection and Alarm System – June 17, 2016

- Added 2.1.A.4 and 2.1.A.5 – Added National Time and Signal On-Point and Siemens XLS as acceptable fire alarm panel manufacturers.

Standard Details and Schedules
Detail 15910002 – Laboratory DDC Architecture and Scope of Work – June 13, 2016
Change: Replaced the Phoenix Macroserver with Phoenix Room Integrator to reflect current product offering.

May 2016

Sustainability
3.1 Sustainable Design and LEED Requirements – May 26, 2016
The requirement for an 11×17 digital copy of the visual display has been removed (only a 24×26 digital copy of the visual display is required)

Codes and Regulatory Agencies – May 10, 2016

- moved "( )* Indicates compartment of jurisdiction. Note egress from compartment; fire alarm & fire suppression for entire bldg are under BFS" from the top of page 23 to the bottom of page 22.
- Table of Contents links now clickable

Special Instructions to Designers

SID 4.3 Building Commissioning – May 2, 2016
Now designates that the A/E always edits (makes project specific) and inserts the appropriate U-M master commissioning specification into Division 1 of the project's specification. The previous version had either the CxA or the A/E edit the commissioning specification which caused confusion and sometimes resulted in projects being issued for bid without a Cx spec.

SID 4.3.3 Full Project Commissioning – May 2, 2016
Significant update to clarify the CxA's scope of work.
Clarified that certain systems are not commissioned by the CxA but by other parties, e.g. elevators, fire alarm, emergency responder radio systems.
Clarified Cx requirements for Security, Access Control, and AV systems and User Equipment
Provides detailed sampling requirements for high count equipment
Delineated responsibilities between CxA and U-M Inspection regarding emergency power systems
The DG name has been revised to Full Construction Phase Commissioning Procedure.

SID 4.3.4 Project Commissioning for Small Projects – May 2, 2016
The scope of Cx work for small projects has been streamlined to essentials so that Cx will be more affordable for small projects. The DG name has been revised to Reduced Scope Construction Phase Commissioning Procedure.

April 2016

Standard Details and Schedules

Civil Details
Reason: Civil details general clean-up and/or removal to better organize and to comply with campus standards. – April 14, 2016
Concrete Curb Details

- New Curb Pavement Patch – delete detail

Miscellaneous detail

- Frost Free Stoop – moved this detail to the Concrete sidewalk detail section

Removed Civil Wall details as they were project specific details and were not typical campus standards – April 20, 2016

Moved the Building Identification Sign Detail , from Civil Design Details section to the Miscellaneous Details section. – April 28, 2016

Removed the Emergency Telephone details in the Miscellaneous Details section. – April 28, 2016

Added Trench Drain Filter Fabric Detail, under the Trench Detail section. – April 28, 2016

Master Specification

260500 “Common Work Results for Electrical” specification update only includes:

- 3.5.A.5 – revised the contact phone number to (734) 763-4568 OSEH Hazardous Materials Management.

MS 226313 MEDICAL GAS CERTIFICATION (FOR HOSPITAL FUNDED PROJECTS) – April 12, 2016
The change is that AirGas, one of our medical gas certifiers, was bought out and the certification services changed names to Compass Cryogenics (see section 1.6)

MS028213 Asbestos Remediation
MS028214 Asbestos Remediation – Floor Tile and Mastic
MS028215 Asbestos Remediation – Roofing Material
The list of pre-qualified asbestos abatement firms has been updated in each. – April 22, 2016

Special Building Areas

DG 5.8 Personal Rooms – April 7, 2016
Changes are minor and include the following:

- Added language encouraging inclusion of personal rooms
- Added language to remind design teams to consider compatibility of proposed uses during the programming phase.

March 2016

Sustainability

DG 3.1 Sustainable Design and LEED Requirements has been revised to include the following requirements:

- A/E's LEED Administrator to notify AEC Sustainability Coordinator with LEED certification results.
- A/E to obtain authorization prior to publishing LEED certifiation results on media platforms.'

Standard Details and Schedules

Electric Drive Water Cooled Water Chiller Piping Schematic – March 15, 2016
A small change to clarify Note 4

Sidewalk Control Joint Layout – March 4, 2016
Re-added to the website

Technical Sections

Interior Lighting – 6.3 DG 265100

- Removed redundant language that is included in associated specification sections.
- Added NFPA 101 to 'Reference Documents'.
- Added requirement to verify, during the Schematic Design phase, LEED credits (associated with lighting design) that will be pursued.
- Restricted use of battery-inverter systems (for emergency lighting) to small single room applications.
- Clarified LED lamp and driver component requirements.
- Clarified preferred occupancy sensor technologies.
- Added requirement for lighting controls to comply with applicable version of ASHRAE 90.1.
- Added requirement to include schedules indicating settings for occupancy sensors and photocells.
- Added dimming system recommendations.
- Expanded recommendations for daylight harvesting applications.
- Added requirement for performing a cost-benefit analysis to justify use of master automated lighting control systems.

Engine-Generator System and Room – 6.3 DG 263000 – March 3, 2016

- Updated list of reference documents.
- Removed redundant language that is included in associated specification sections.
- Added requirement to evaluate indoor verses outdoor locations and preference for locating generators outdoors on grade level.
- Added requirement to coordinate with U-M OSEH Air Quality Specialist during schematic design phase.
- Clarified requirements for generator main circuit breakers.

- Clarified generator sizing requirements.
- Clarified required available fault current ratings for closed transition automatic transfer switches.
- Simplified load bank testing requirements.
- Added preference for generator rooms not to be located on lowest level of building.
- Added requirement for installation of dry horizontal sidewall fire protection sprinklers.
- Added requirement to indicate working clearances for electrical equipment on plan view drawings.
- Added requirement for phase rotation monitors on generator back feed tap boxes.

Master Specifications
230905 MECHANICAL SYSTEMS CONTROLS (HOSPITAL PROJECTS)

A summary of changes includes:

- Defined that DDC HMI shall be provided & installed by MSCC, programmed by SI.
- Modified submittal requirements.
- Further defined DDC architecture.
- Added Tstat aux comm port.
- Modified HMI & diff pressure transmitter requirements.
- Modified BACnet naming requirements.
- Added DDC installation requirements.

February 2016

Special Instructions to Designers
4.4.5 Site Signage New Design Guideline – February 24, 2016

Standard Details
Concrete Sidewalk Details – Decorative Finishes-Picture Framed – February 24, 2016
The detail has been removed from the web site since picture framed sidewalk is not a campus standard.

New Standard Details – February 17, 2016
D 235716 001 Steam to Water Heat Exchanger P & ID
D 235716 002 Steam to Water Heat Exchanger Details and Schedules

Technical Sections

Common Work Results for Electrical – 6.3 DG 260500 – February 24, 2016
- Updated list of reference documents.
- Added labeling requirements when modifying existing circuits.

- Revised/updated content requirements for short circuit, protective device coordination and arc flash hazard studies and reports.
- Added requirement to indicate working clearances for electrical equipment on electrical plan view drawings.
- Added requirement to include room names and numbers on electrical plan view drawings.
- Removed redundant language that is included in associated specification section regarding electrical coordination.
- Clarified requirements for instructing contractors regarding code inspections.

Fire Detection and Alarm – 6.3 DG 283100 – February 23, 2016

- Updated formatting.
- Removed redundant language that is included in associated specification sections.
- Added summarized design guideline 'Scope' section
- Added 'Related Sections' section.
- Added summarized 'Design Requirements' section
- For new buildings not required by code to a have a fire alarm system installed, a requirement was added to perform a risk analysis. This analysis will be used to assist in determining if a fire alarm system should be installed even though it is not code required.
- Clarified component requirements for fire alarm control panels.
- Clarified requirements for initiating devices and notification appliances.
- Clarified requirements for monitor and control modules.
- Added reference to design guideline for Emergency Responder Radio Coverage systems.
- Add requirements for Mass Notification systems.
- Clarified required signal inputs for MOSCAD systems

Unit Substation Energization Requirements – February 24, 2016

- Revised list with UPE updates.
- Deleted redundant items.
- Clarified U-M lock core requirements.
- Clarified requirement regarding verify phasing between primary, transformer and secondary sections.
- Clarified requirements regarding primary cable testing and associated report.
- Added requirement for contractor to install breakers after receipt from testing agency.
- Added requirement for continuity testing of CT wiring.

Master Specifications

MS312500 Erosion and Sedimentation Control – February 8, 2016

The web links have been updated with working links and UM OSEH added text regarding OSEH inspection.

Specification 281300 Access Control & Monitoring – February 11, 2016

Notable updates include:

- 1.4.B – Updated list and contact information for Qualified Installers.
- 2.2.A.2 – Deleted diode noise suppression requirement (UM key office reported intermittent issues with diodes).
- 2.2.F.1.c. – Revised reader heater power supply (the previous power supply is no longer manufactured).
- 3.3.F – Provide dedicated receptacle outlets for reader heater transformers.

Preferred Manufacturers Lists

Electrical Preferred Manufacturers List – February 10, 2016

The revisions include:

1. 260533 Cable Trays – Legrand and Wiremold products are now known as Legrand Cablofil.
2. 262726 Wiring Devices – WattStopper is now known as Legrand WattStopper. Pass & Seymour is now known as Legrand Pass & Seymour.
3. 273523 Emergency Responder Radio Services – Updated contact info for RF Connect. Added JDRM contact info for signal survey services.
4. 281300 – Card Access Control Designers/Installers – Updated contact info for Siemens. Deleted Electronic Security Systems, Johnson Controls, and TTI due to lack of service and/or interest.

Codes and Regulatory Agencies

Codes and Regulatory Agencies – Updated February 4, 1016

- Changes to the Codes and Regulatory Agencies for February 2016:
- Changed “Michigan Residential Code 2009 (adopted March 9, 2011)” to “Michigan Residential Code 2015 (adopted February 8, 2016)” on page 6.
- Changed “Rule 408.30401 Rule 401” to “Rule 408.30500 Rule 500” on page 6.
- Removed link to the Safety Management Services “http://www.med.umich.edu/sms/” on page 20.
- Checked All Links

January 2016

Technical Sections

Unit Substations – 6.0 DG 261100

- Updated formatting.

- Removed redundant language that is included in associated specification sections.
- Added a summarized design guideline scope section.
- Added a summarized design requirements section
- Consolidated system ratings and space requirements.
- Added vertical bus rating requirements for secondary switchgear feeder sections.
- Clarified Ethernet connection requirements for secondary switchgear.
- Clarified requirements for sub-metering of secondary feeders

Special Building Areas

Unit Substations Rooms – SBA 5.7

- Updated formatting.
- Removed redundant language that is included in associated specification sections.
- Added a summarized design guideline scope section.
- Clarified design requirements regarding sound proofing.
- Clarified design requirements regarding EMF and the possible impact on sensitive electronic equipment.
- Added wall construction requirements for substation rooms (our typical substation room is required by the M
  ichigan Electrical Code
  to be constructed as a transformer vault).
- Clarified equipment egress path requirements.
- Removed alternative for installing foreign piping and ductwork in substation rooms

Standard Details

Civil notes have been updated with minor organizational changes as well as utility note changes to incorporate City water main review comments.

We have updated storm sewer details based on standard practice and added options for manhole covers.

Theses details have been removed:

- Double Storm Inlet
- Storm Inlet Section
- Storm Inlet In Pavement Section
- Storm Inlet Section Yard Drain (Typ.)
- Slotted Drain Corrugated Galvanized

- Concrete Block Inlet – Jct. Chamber
- Standard Storm Manhole
- 4′ Catch Basin (Curb Inlet)
- Underdrain
- Road Edge Drain
- Typical Underdrain Detail With Existing Curb and Gutter

These details are new:

- 2′ Diameter Storm Inlet
- 4′ Diameter Precast Catch Basin
- 4′ Diameter Precast Storm Manhole
- Double Storm Catch Basin
- Underdrain With Curb & Gutter
- Underdrain

Under storm details, the following 2009 details have been reomoved due to being outdated.

- Storm water detention/detention outlet restrictor
- sidewalk edge drain
- trench drain

FYI – the only one that will be replaced is the trench detail, but we have not updated it yet.

All of the sanitary sewer details are outdated and have been removed and replaced with a link to the City of Ann Arbor Sewer details (same as for the water main).

Master Specifications

Division 1 : summary of changes

- Section 011400 – Work Restrictions – optional language added for projects that require do not allow use of building toilet facilities.
- Section 015000 Temporary Facilities and Controls: Added elevator use and protection requirements that will be removed from Supplemental Conditions.

Division 8

- Section 087100 Door Hardware – Updated part numbers on office locksets for classroom use.

Division 9

- Section 099100 Painting – updated manufacturer list and formatting changes

December 2015

Technical Sections

Medium Voltage Electrical Distribution – 6.0 DG 261000

- Updated formatting.
- Removed redundant language that is included in associated specification sections.
- Added a summarized design guideline scope section.
- Added a summarized design requirements section.
- Clarified distribution schemes for Central Campus, North Campus and UMHHC.
- Added requirements for coordinating with UPE prior to planning expansions of UM medium voltage distribution systems.
- Clarified electrical service point for new buildings.
- Added requirements for load estimates during design phase of projects.
- Clarified UPE's scope for furnishing and installing medium voltage cables and terminations.
- Added component and configuration standards for unit substations as they relate to the medium voltage distribution system.

Project Procedures

Design Deliverables were updated (in October) to include the new requirement for Design Professionals to benchmark projects with a construction budget of $5M or greater. Design Guideline 2.5 Project Estimates has been updated to include the template.

Codes and Regulatory Agencies

– Removed from the University of Michigan Buildings that Contain Instructional Space on page 22:
1670 Flint Harding Mott Univ Center
1607 Flint Lapeer St Annex
1671 Flint Recreation Building
5219 Flint Student Housing Facility
1662 Flint University Pavilion
– Added to the University of Michigan Buildings That Contain Instructional Space Lease Properties on page 23:
5403 Flint Beecher Neff Center
5343 Flint Riverfront Center
5360 Flint Urban Alternatives House
– Updated Table of Contents page numbers
Master Specifications
265600 "Exterior Lighting"
The "Exterior Lighting" Specification updates include:

- Various revisions from "Outside Lighting Shop" references to "Utilities Power & Lighting Shop", including updated phone numbers.

- Various revisions throughout, updating terminal blocks, in-line fuse holders, nuts, bolts, washers, etc. to align with current master details.
- 2.1.A – added designer note describing UM transition towards LED lighting for exterior applications.
- 2.1.A.5 and 6 – deleted metal halide technical requirements and added LED requirements.
- 2.2.A – added designer note outlining potential stakeholders of roadway/parking lot lighting team. Describes proposed LED fixtures suitable for parking lot and roadway applications.
- 2.2.A.1 thru 7 – deleted metal halide technical requirements and added LED requirements.
- 2.9 – added designer note describing preference for DDC control of exterior lighting.
- 2.9.B – deleted stand-alone time clock specification.

November 2015

Codes and Regulatory Agencies
Changes made:

– Changed on page 6 “State of Michigan Electrical Code incorporating “NFPA 70 – National Electrical Code”, 2011 edition with University of Michigan modifications.” to “State of Michigan Electrical Code incorporating “NFPA 70 –National Electrical Code”, 2014 edition with University of Michigan modifications.”

– NFPA 45 updated to 2011.

– Updated the administrative rules website links for the following:

- State of Michigan Health Care Safety Rules on pg 7. (now http://w3.lara.state.mi.us/orr/Files/AdminCode/1129_2012-120LR_AdminCode.pdf)
- State of Michigan Dormitory Fire Safety Rules for Schools, Colleges, and Universities on pg 8. (now http://w3.lara.state.mi.us/orr/Files/AdminCode/965_2011-003LR_AdminCode.pdf)
- State of Michigan Fire Safety Rules for Schools, Colleges, and Universities on pg 8. (now http://w3.lara.state.mi.us/orr/Files/AdminCode/964_2011-002LR_AdminCode.pdf)

– Adopted Michigan Electrical Code 2014 and National Electrical Code 2014 on November 1, 2015 altering page 11 and 12:
FROM:

> State of Michigan Electrical Code 2011 Part 8 Electrical Code Rules (Adopted January 17, 2014) (Incorporating NFPA 70 – National Electrical Code (2011 Edition) and Michigan Amendments) promulgated by State of Michigan Department of Licensing and Regulatory Affairs, Bureau of Construction Codes.
> Michigan Electrical Code Article 80: Article 80 of the Michigan Electrical Code does not apply.NEC 2011

Section 220.12: When the lighting system is being designed in accordance with the watts/sf and lighting controls requirements of the U-M Energy Code, the exception being added to Section 220.12 of the 2014 NEC may be applied to the 2011 NEC. Applying the exception will result in a more accurate calculation of the lighting power system load and a more appropriate sizing of the lighting power system.NEC 2011 Section 310.15(B)(3)(c) and referenced Table 310.15(B)(3)(c): The requirement for adjusting the ampacities of conductors and cables in circular raceways exposed to sunlight on rooftops shall not be applied.NEC 2011 Section 695.3: The requirements for power sources for electrically driven fire pumps and the requirements for 'reliable power' will be determined by the University's High Voltage Engineer, on a case-by-case basis.NEC 2011 Sections 700.27 and 701.27: The University may deviate from full selectivity (overcurrent protective device coordination within the emergency generator distribution system) in order to lower arc-flash energy levels for worker safety. All such deviations from full selectivity will be designed by, and reviewed by, registered professional engineers.Enforcing Agency — University of Michigan Architecture, Engineering and Construction.Web site for Part 8: http://www.michigan.gov/documents/lara/lara_bcc_rules_2011_electrical_rules_070113_422907_7.pdf

TO:

State of Michigan Electrical Code 2014 Part 8 Electrical Code Rules (Adopted September 21, 2015) (Incorporating NFPA 70 – National Electrical Code (2014 Edition) and Michigan Amendments) promulgated by State of Michigan Department of Licensing and Regulatory Affairs, Bureau of Construction Codes.
By local rule the following exceptions/modifications are applied to the Michigan Electrical Code:Michigan Electrical Code Article 80: Article 80 of the Michigan Electrical Code does not apply.NEC 2014 Sections 700.28 and 701.27: The University may deviate from full selectivity (overcurrent protective device coordination within the emergency generator distribution system) in order to lower arc-flash energy levels for worker safety. All such deviations from full selectivity will be designed by, and reviewed by, registered professional engineers.Enforcing Agency — University of Michigan Architecture, Engineering and Construction.Web site for Part 8: http://www.michigan.gov/documents/lara/lara_bcc_electrical_2014_part_8_rules_492610_7.pdf

– Michigan Buildings that Contain Instructional Space pages 22-23:

- Changed 0150 Literature Science and the Arts to include 4th Floor
- Added 5347 School of Nursing New Building
- Added 5017 Flint North Bank Center

– Added a new subsection 'University of Michigan Buildings That Contain Instructional Space and Are Rental Properties' and included the

- 5382 Woodward Gardens building.

– Necessary format changes and spelling corrections.
– Updated the table of contents.

– All links have been checked.

Master Specifications

MS237324 Semi-custom Air Handling Units
MS238216 Coils and Drain Pans

Changes: Ventrol added as approved mfr. for coils, Ingenia added as approved mfr. for semi-custom AHUs, per HVAC MTT.

Division 1

Summary of updates as follows:

- Section 010000 “Summary:
  - Added language related to non-BFS compartments in BFS buildings.
- Section 011400 “Work Restrictions:
  - Added contractor identity badge requirement and
  - Removed substantial completion date and referenced the FOP.
- Sections 012100 and 012300 “Unit Prices” and “Alternates”:
  - Edited language for better coordination with FOP
- Section 013100 “Project Management and Coordination”
  - Added language regarding inspections, testing, and sequencing.
  - Substantially rewrote coordination drawing requirements to better reflect current practice and expectations.
- Section 013500 “Special Procedures for Fire Marshal Review and Inspection”:
  - Added detailed requirements for finish affidavits for fire marshal inspection.
  - Added language related to non-BFS compartments in BFS buildings.
- Section 014200 “References”: Substantially rewrote to better coordinate with new SGC and with industry standards.
- Section 017300 “Execution”: New section added to address general requirements for inspection, preparation, installation, and preparation (some of which were previously in the Supplemental General Conditions).
- Section 017329 ” Cutting and Patching”: Updated language to better reflect current use of the section.

Standard Details

Civil Details

Removed all current details posted UM Civil standard water main details and replace with a link to the City of Ann Arbor standard water main details.
City of Ann Arbor Water Main Standard Details:
http://www.a2gov.org/departments/engineering/Pages/Division-.aspx

Deleted the noted below details under pavements/concrete pavement details as they are not typical campus standards.

- Longitudinal lane tie joint symbol D
- transverse expansion joint
- concrete road cross section

Removed the current Expansion Joint from the Civil Details on the AEC Website and replace it with “Pavement Expansion Joint Detail“.
Replaced the current Sidewalk Detail

- Permeable paver system on porous concrete detail was added as a campus standard.

- Concrete standard sidewalk and pavement expansion joint details were updated to clarify actual campus standard practices.

October 2015

Special Instructions to Designers
4.6 – Utilities for University Provided
Revisions have been thoroughly vetted bu the UPE Tunnel Dept., the AEC Utilities Group and various mech tech teams.

- Title changed – now addresses all utilities, not just those provide by U-M
- Minor corrections/ clarification to utility temperatures/ pressures.
- Minor format corrections on cross-referenced section, changed “Project Coordinator” reference to “Design Manger” etc.
- Added cross reference to DG 5.9 regarding use of PRVs for back-up.
- Added requirement for flash tanks on high pressure condensate. Though new in this DG, this requirement was routinely enforced but occasionally overlooked by outside AE’s not familiar with best practice. AS such, we expect this change will actually lower costs because flash tanks will be less likely to be overlooked and added via CCD.
- Added reference to have AEs check with AEC on required backpressure on pumped condensate. In addressing past condensate pumping issues, A&E developed a flow model of the pumped condensate system throughout the tunnels. By checking with A&E, we can ensure properly sized pumps are installed upfront, thereby lower capital and maintenance costs associated with installing sub-optimal pumps.
- Added minor correction to backflow prevention for domestic HW.
- Reference to a “chilled water tap fee” was removed. While this fee may still apply in some cases, it has not been uniformly applied in the past. We feel its best to negotiate that within AEC, rather than confusing outside AEs. No cost impact.
- New articles were added on “non-university provided utilities (gas, storm, sewer, water), Utility Corridors and Easements. None of these are expected to directly impact cost, but may reduce redesign delays.
- Clarifications were added to “metering” article. Little or no cost impact with these changes.

Special Building Areas
DG 5.9 Tunnels
Revisions have been thoroughly vetted bu the UPE Tunnel Dept., the AEC Utilities Group and various mech tech teams.

- Minor formatting adjustments – no cost impact.
- Added clarification on design pressure versus operating pressure for LPS and HPS. No cost Impact.

- Changed design temperature to be used for LPS and HPS during an excursion due to desuperheater failure from 600F to 450F. This is a major change that could have significant cost savings on future tunnel projects, and potentially reduce maintenance costs as well, by eliminating the need for some expansion joints. This change was made after extensive analysis by AEC and UPE.
- Added guidance on the application and sizing of backup pressure reducing valves. This could provide cost savings on some projects. More importantly, it provides consistent direction to be used for future projects.
- Added requirement for domestic HW valves to be 316 stainless, rather than 304 stainless. Though this will add additional cost on some tunnel projects, additional cost appears warranted considering continuing corrosion issues associated with City of Ann Arbor water.
- Changed tunnel ventilation requirements, increasing maximum allowable tunnel temperature to 115F (had been 100F). This change will reduce cost of some future projects. However, several sections of the tunnel system do not even meet this less stringent requirement.

5.10 Gender Inclusive Toilet/ Locker Room
Removed “design manager” and replaced with “Associate Vice President for Facilities and Operations” as the entity that can give exception to this guideline.

Project Procedures

Design Deliverables
Cells highlighted yellow indicate revisions

Changes,
Updated Civil/ site requirements
Added, clarified site signage

Master Specifications

“MS2627226 Wiring Devices ” Specification updates include:

- 2.3.A & B & D – Cooper Controls (Eaton) was added as an acceptable occupancy sensor manufacturer. This revision brings the specification in-line with the current PML.
- 2.3.C Designer Note – The designer note was updated to reflect the latest track record for ultrasonic occupancy sensors. The latest sensors use a higher frequency and no longer interfere with hearing aids. This was confirmed with UM’s ADA Coordinator.
- 2.5.A – For GFCI receptacles, added self-testing requirement and added blinking light that indicates a GFCI malfunction. This brings the specification in compliance with the latest government and UL requirements for GFCIs.
- 3.1.C – clarified freezer and window air conditioning wiring as #10 AWG minimum, as voltage drop or other derating factors may require larger conductors than #10.

- 3.1.D – reworded/clarified the requirement to have dedicated neutrals for 120 volt and 277 volt branch circuits.

Section 017420 of the U-M Division 01 specification has been revised to clarify that the construction and demolition waste tracking form be completed in one unit.

Revised MS232116 Hydronic Piping Specialties

Revised Part 3 air vent description to match revised U-M Standard Detail for air vents, to be issued soon. Tracked version also attached.

233600 Air Terminal Units
Changes: Eliminated wording that was confusing some bidders regarding who furnishes TECs for terminal units.

233100 HVAC Ducts & Casings

237323 Custom Air Handling Units

238219 Floor Mounted Fan Coil Units (Un-ducted)
Revisions: additional approved mfr.s added, per the HVAC MTT.

Standard Details

New Civil Detail 321400 Paver – Permeable System On Porous Concrete

Automatic Water System Air Vent Detail
Detail notes were improved and a detail for a manual air vent was added. Changes per Hydronics MTT.

Sustainability

- 3.2.1 Energy and Water Conservation Report Format – Projects $2M to $10 M Construction Cost
- 3.2.2 Energy and water Conservation Report Format – Projects Over $10M
- 3.2.3 Energy Impact Statement

These documents have undergone minor revisions.
All have been revised to replace references to old SID and DG names and numbers.

September 2015

Preferred Manufacturers Lists
Electrical PML

1. Under 262726 WIRING DEVICES (page 9/14), we've added four equivalent manufacturers to "USB Charging Port Receptacles". This aligns the PML with the existing master specification.
2. We've deleted 274000 AUDIO VIDEO SYSTEMS and the sub-heading "Wireless Microphone Systems" (page 13/14). The master specifications do not include audio visual systems in general, only their associated

raceways. Audio Visual Systems are specialty systems that are constantly evolving; these system designs are best handled by the Audio Visual consultant on each project.

3. We've added 273523 EMERGENCY RESPONDER RADIO COVERAGE (page 13/14). These organizations provide related design and installation services. RF Connect provided the installation at the new School of Nursing Building. Motor City Technologies provided the installation at the new Munger Graduate Residences.

Technical Sections
DG 230930 Refrigerant Monitoring : This DG was updated to refer to the U-M master specification for refrigerant monitors and the new detail for refrigerant monitor controls, and for general clean-up of formatting. Information now covered in spec editor's notes of the refrigerant monitor spec, or in the new detail, has been deleted from the DG.
DG 230900 Controls : This DG was updated to list DG 230930 as a related section and to refer to the new detail for refrigerant monitor controls. It is otherwise unchanged.
New Standard Details
Notes – Civil Standard
Notes – SESC and OSEH General

August 2015

Preferred Manufacturer Lists

Architectural Preferred Manufacturers List

Added ASI Global Partitions to the toilet partition PML 102113.

The Electrical PML updates include:

- Added WBT as an acceptable manufacturer for wire basket cable tray.
- Deleted General Electric as an acceptable manufacturer for substation equipment and assembly. Added ASEA Brown Boveri (ABB) as an acceptable manufacturer for substation equipment and assembly.
- Added Copper Controls (Eaton) as an acceptable manufacturer for occupancy controls.

Master Specifications

MS 237213 Rotary Air-to-Air Energy Recovery Wheels and MS 230593 Testing Adjusting and Balancing Changes:

Rotary HX Spec:

Update to improve cross wheel leakage requirements, add rotation detection device, improve bearing requirements, modify dual belt requirement to allow spare belts ILO dual belts, provide AHRI certification documents, add factory testing

requirement, advise do not use wheels in hazardous exhaust, add source quality control section, and other minor improvements.

TAB Spec:

Added requirement to label chilled beams. Added requirement to verify purge volumes and cross leakage of air to air heat exchangers.

MS211313 Sprinkler Systems

Change: For sprinkler head mfr.s, change Anvil to Tyco. (Due to various industry buy-outs over the years Anvil is no longer a sprinkler brand name.)

MS261100 Unit Substation Specification updates include:

- 2.1.A.1, 2.3.A.1, 2.4.A.1 – Added ABB and deleted General Electric. Comment: General Electric has consistently under performed, including in areas of equipment durability, adherence to bid documents, and partnering.
- 3.4.C – Revised training sessions to take place two to four weeks after the start-up of the new substation. Comment: Training is an important element and should not be lumped together with energization or commissioning activities.

MS230930 Refrigerant Detection and Alarm

Changes: Horns and lights associated with the refrigerant monitor are now to be provided by the controls contractor, therefore those requirements have been deleted from the spec and are covered on the recently posted new refrigerant monitor control detail D 15635 001. This revised specification along with the new detail include the alarm monitor set points required by U-M OSEH, an alarm horn silence function, signage, and other requirements for refrigerant monitoring. Typically using the spec and detail should be adequate for most projects with minimal editing required (e.g. listing the horn/light qty.s on the detail). Refer to the specification's editor's notes for additional info and guidance.

Standard Details

New 15635 Refrigerant Monitor Control Diagram

July 2015

Division 1
Section: MS010000 Div 01 General Requirements 2015-07-13
The following three sub sections were updated to add new mechanical and electrical systems to the scope of work and revise system names for consistency with specification section nomenclature:

- 017823 – Operation and Maintenance Manuals,
  019100 – Full Project Commissioning
  019110 – Project Commissioning for Small Projects
  Section 01770 – Closeout procedures' was accidentally removed in the last update for Division 1 (about 2 weeks ago, 7/13), it has been added back in.

MS033053 Miscellaneous Cast-in-Place Concrete 2015-07-16

- Complete rewrite to meet current industry standards and products

MS035416 Hydraulic Cement Underlayment 2015-07-16

- Complete rewrite to meet current industry standards and products

Master Spec 237323: Custom Air Handling Units
Minor revisions to factory testing requirements to assure proper testing.

Master Spec 237324: Semi-Custom Air Handling Units
Spec editors note added recommending custom AHUs when using air-to-air energy recovery wheels.

DG 6.0 075000 Roofing Systems and Accessories
Maintain minimum of 36" clear between mechanical units and adjacent structures, units, walls etc. for roofing repair and or replacement in the future.

June 2015

Master Specification
237323 Custom Air Handling Units

Revised to indicate when coil vents and drains are to be extended to the OUTSIDE of the casing, per HVAC MTT. (This revision was approved by the HVAC MTT last year but it was mistakenly not sent for posting.)

265100 Interior Lighting
We have updated the Interior Lighting Specification (the Interdepartmental Electrical Team has already had an opportunity to review and discuss). Please upload these to our web site (refer to the PDF and DOCX attachments).

Significant updates include:

1. Added a "night lights" definition in section 1.2. Consultants and contractors too often confuse night lights with emergency lights, leading to unnecessary RFIs or improper installations.
2. Added 1.3 Submittals section and a 1.4 Quality Assurance section. Some of the quality assurance information was reorganized and moved from "PART 2 – PRODUCTS" of the previous version. LED binning is a new item to ensure a level of LED color consistency.
3. Added 1.5 Warranty section. This is essentially a reorganization of items moved from "PART 2 – PRODUCTS" of the previous version.
4. Added 2.1.A.1, identifying that DLC, LED Lighting Facts, and ENERGY STAR listings/labels are preferred manufacturers to tie in with the previous PML revision.
5. In 2.1.C, added a designer note regarding that "throw-away" LED fixtures are not preferred. In general, this should not be an issue with everyday general LED lighting. However, accent and specialty LED lighting may

often have “throw-away” fixtures specified still. The general industry tends to find this acceptable yet, as accent and specialty lighting can depreciate to 50% or less light output and still be considered effective for their intended use. If “throw-away” LED fixtures are specified, the lighting designers should discuss this with the project team to receive approval on a project-by-project basis.

6. In 2.2, added a designer note stating a preference for T8 lamping over T5 lamping, unless the T5 lamping strategy demonstrates a reduction in overall fixture quantities.
7. In 2.2.A, revised average fluorescent lamp life from “24,000 hours” to “24,000 hours minimum”. The lamp market seems to be approaching a cross-over in lamp prices. If longer life lamps are produced in larger quantities, then perhaps they may eventually become cheaper than 24,000 hour lamps. Let’s get longer lamp life when market forces allow.
8. In 2.2.B, added a designer note stating a preference of LED fixtures over compact fluorescent fixtures. LED fixtures are generally cost-competitive with compact fluorescent types, and they have the added advantages of dimming, instant on, longer life, broader operating temperature range, and color quality.
9. In 2.3.D, added an LED driver qualification of 85% minimum efficiency.
10. In 2.3.E, added that dimmable LED drivers should be 0-10V type.

MS087100 Door Hardware

- Deleted attic stock per key office request
- Added Sargent closer
- Updated to add 2 additional manufacturers for magnetic door hold opens

MS099100 Painting

- Added second selection option for exterior aluminum surfaces

104400 Fire protection specialties
Updated to remove minimum interior dimension of fire extinguisher cabinets. Cabinets will be sized for specified equipment.

230593 Testing Adjusting & Balancing (TAB)
Added 230910 and 230920 as related sections. Added in Article 3.8 to verify LTAU air flows at design min. and max CFM. d. karle for hvac mtt june 2015.

230920 Lab Terminal Air Flow Units & Controls
June 2015: added requirement for valve calibration certificate under submittals, added post submittals article. improved description of valve operation under 2.3.A to require that characterized valve position be the primary means of achieving air volume setpoint, added that additional or fewer air valves are the RESPONSIBILITY of the contractor to provide if a MANUFACTURER other than the design basis is supplied since flow range v. valve DIAMETER varies between mfr.s, required that +/-5% valve accuracy be over the entire cataloged volumetric operating range of the

ltau. Strengthened requirement that LTAU INDICATED air volume not to be adjusted based upon field measurements (Art. 3.2). d. karle per hvac mtt.

caution: analog style ltaus typically not AVAILABLE or used for CURRENT projects so this SPECIFICATION should not normally be used, instead use DDC version (230910). in the unusual condition that this spec is used, edit carefully to make project specific.

230910 Lab Air Flow Controls-DDC
June 2015: Revised to require reheat coil be provided by lcc, added reheat coil spec. added requirement for valve calibration certificate under submittals, added post submittals article. improved description of valve operation under 2.3.A to require that characterized valve position be the primary means of achieving air volume setpoint, added that additional or fewer air valves are the RESPONSIBILITY of the contractor to provide if a MANUFACTURER other than the design basis is supplied since flow range v. valve DIAMETER varies between mfr.s, required that +/-5% valve accuracy be over the entire cataloged volumetric operating range of the ltau, required fume hood monitors be provided with a common ALARM silence button since some mfr.s were providing multiple silence buttons. Revised building automation interface requirements to require phoenix macro server and siemens pxc. Strengthened requirement that LTAU INDICATED air volume not to be adjusted based upon field measurements (Art. 3.2). d. karle per hvac mtt.

220523 Valves
Clarified that high performance butterfly valves are to be used in grooved pipe unless it is specifically noted that grooved style butterfly valves are acceptable.
221119 Domestic Water Piping Specialties
Aligns the spec with related U-M details regarding city water meter purchase and installation.

Preferred Manufacturers List
Revised Electrical PML . The following revisions have been made:

1. Under 261100 Unit Substations, the KWHR/Demand Meters have been revised to Schneider Electric PowerLogic ION8650. This revision now coordinates with the previous specification revision.
2. Under 265100 Interior Lighting, we have added requirements to preferred LED lighting manufacturers. LED fixtures that have a DesignLights Consortium listing, a US Department of Energy “LED Lighting Facts” label, or a US Environmental Protection Agency ENERGY STAR label will be considered as preferred. These organizations vet the manufacturer data sheets to ensure that LED products live up to their literature. There are over 143,000 listed or labelled LED lighting fixtures between these three organizations. By adopting these preferred manufacturers, we hope to slow down the “fly-by-night” LED product offerings. It is understood that low-volume LED products, such as accent or decorative lighting, may not have these listings or labels, so UM project teams will have to accept them on a case-by-case basis.
3. Under Section 283100 Fire Detection & Alarm Systems, Notifier fire alarms was added for NCRC buildings and a typo for VESDA was corrected.

Special Building Areas
Revised 5.11 Fire Command Center

The changes in the design guideline are due to the following reasons:

- Clarified that safety-related equipment in the room shall be on emergency power, not outside equipment like HVAC serving the room.
- Changed the requirement for a control switch to simultaneously unlock stairway doors except exit discharge doors to the outside that are locked by the card access control system to match the current MBC.
- Specified the room interior door to be keyed for a BA key and the exterior door to have a card reader and be keyed for a ZE key.
- Changed “Fire Alarm Control Panel” to “Fire Alarm Control Unit” (FACU) to match the change in fire alarm code language.
- Added that if the building has emergency responder radio coverage (ERRC), the FACU shall monitor it.
- Added that if the building has emergency responder radio coverage (ERRC), do not provide a fire department two-way communications system.
- Clarified the generator “AUTO-RUN” switch shall be maintained contact, not spring return to center.

May 2015

Master Specifications

221113 – Piping Materials and Methods
Revised: Revise stainless pipe description to allow 316L only for cold domestic and condenser water due to concern with chlorides in city water corroding 304L.

New 230905 Mechanical Systems Controls (Hospital Projects)
New mastespec was based on the campus AEC MS 230900. We have heavily edited Part 1 and Part 3 of the campus masterspec. Much of the Part 2 Products section remains the same, with relatively minor additions/ modifications to reflect work specific to UMH.

Here’s a summary of what this new masterspec is allowing us to do:

UMHHC owns and maintains a unified Mechanical Control System (MCS) frontend called Siemens Desigo CC. This frontend is the single and only frontend used to monitor, control, alarm and trend DDC points reporting from a variety of DDC systems used in UMHHC facilities, including Johnson Controls, Siemens, Honeywell & ASI.

- The design A/E shall utilize UMHHC’s masterspec MS230905 “Mechanical Systems Controls (Hospital Projects)” for all work on hospital funded projects that are to be maintained and monitored by the UMHHC BMS. AE

shall be responsible for editing this masterspec so that it is job specific.

- All UMHHC DDC systems, regardless of manufacturer or type, shall report all points back to the Desigo CC frontend. Proprietary, or vendor specific frontends, are not allowed.
- The complete control system work shall be split between the Mechanical Systems Controls Contractor (MSCC), the Systems Integrator (SI) and UMH's Medical Center Information Technology (MCIT) department. See Masterspec 230905 Mechanical Systems Controls (Hospital Projects), Part 1 section for a detailed description on the division of work.
- The MSCC shall provide a fully integrated BACnet MCS incorporating electric, pneumatic, and direct digital control (DDC) components for the control and monitoring of heating, ventilating and air conditioning (HVAC) equipment and other related systems. Controllers shall natively use the most current ANSI/ASHRAE Standard 135 for communications and shall be BTL certified with BTL published PIC statements.
- UMHHC's Desigo CC frontend is installed on virtual servers in MCIT's datacenter. All communication/ integration to the Desigo CC frontend shall be via BACnet IP over the MCIT layer 3 network. UMHC's MCIT department shall be responsible for the design and installation of this primary network. The AE shall coordinate and clearly show on the contract documents all MCIT data drops to all IP based DDC controllers.
- UMHHC wishes to maximize the use of its MCIT network for a) communication to the Desigo CC frontend and b) communication between DDC building controllers. Communication to/ between lower level controllers shall be via a MS/TP secondary field level network (FLN), provided & installed by the Mechanical Systems Controls Contractor (MSCC).
- The SI shall be responsible for BACnet device and object discovery, point instantiation, alarm & trend definitions and creating of all front end graphics. The role of Systems Integrator shall be performed by UMH Systems Monitoring staff, or an integration contractor hired by Systems Monitoring. All contracts for Systems Integration, if needed, shall be at the discretion of UMH Systems Monitoring staff and shall be direct contracts with UMH, external to the construction contract.
- All products to be used as an integral part of the proposed MCS must be contained on the vendor's pre-approved parts list (including BTL PIC statements) on file with the UMHHC Facility Planning and Development (FPD) office.
- The AE shall discuss with the FPD mechanical engineer the approved control manufacturers to list in the project specifications. The desire it to competitively bid all control projects to the approved control manufacturers listed in specification 230905. In general, all terminal unit controls (VAV/ CAV boxes, mixing boxes, FCU's, etc) as well as all brand new stand-alone facility installations shall be competitively bid. However, UMH wishes to standardize controller manufacturers (and programming, sequence of operation, setpoints, alarming, etc) on critical equipment within a given facility. Examples of equipment that UMH may wish to sole source includes modifications to chiller plants, heating plants, AHU plants and Operating Room/ Procedure Room terminal controls.

Technical Sections

DG 6.0 102800 Toilet Accessories – prefer the toilet paper be installed above the grab bar.
DG 6.0 096500 Resilient Flooring – in general install flooring under cabinetry.

DG 6.0 123553 Laboratory Casework

Summary:

- Complete rewrite to reflect current practices and coordinate with Laboratory Design and Safety guideline.

Revised Standard Details
Multiple details have been revised to include information for LED fixture installation.

26560001 – Metal Halide Site Light Schedule

26560004 – Site Lighting Trench Detail

26560006 – Typical Pole Wiring Detail

26560007 – Single Globe Unit

26560008 – Double Globe Unit

26560009 – Five Globe Unit

26560010 – Street Light Fixture Detail

26560014 – Parking Lot Fixture Detail

26560016 – Pedestrian Light Wall Mounted

26560021 – Slipfitter Mtd Detail

26560022 – Wall Mounting Detail

26560024 – Riser For Building-Mounted Exterior Lighting Power Source

26560025 – Pedestrian Top Wall

April 2015
SBA 5.11 Fire Command Center and DG 230900 Mechanical Systems Controls
SBA 5.11 Fire Command Center was revised to clarify certain code requirements

for Fire Command Centers that are subject to interpretation, which often results in changes during construction. In particular, the requirements for smoke control panels are now described, as well as the requirements for controlling air distribution systems not related to smoke controls. It is expected that these revisions will reduce costs by avoiding change orders, and because in many cases designers or contractors were including features not required by the code or the U-M AHJ, or were failing to include code requirements such as air distribution system controls for high rises. These revisions were reviewed and approved by the U-M Fire Marshal.

Because revised SBA 5.11 specifies that building controls be used for air distribution system controls (rather than duplicating similar functions in the fire alarm system), DG 230900 Mechanical Systems Controls was revised to describe that requirement, and therefore is also included for approval.

Master Specifications
MS211313 Wet and Dry Pipe Sprinkler Systems
Revisions: Pipe used on dry systems is now specified to be schedule 40 galvanized steel in all sizes. Dry system piping must be installed with the pipe seam above horizontal, must be sloped to drain at all locations and all trapped sections must be equipped with a drain valve. Added spec for dry pipe valve. Minor format fixes and mfr. updates. Revised spec name to wet and dry pipe sprinkler systems. Changes are due to ongoing problems with microbiological corrosion on dry pipe systems. A tracked version is provided for information.

6.0 Technical Sections
DG210000 Fire Protection
As recommended by the Fire Protection/Plumbing Mech. Tech Team:

Due to significant problems with microbiologically induced corrosion (MIC), dry pipe systems are to be specified with schedule 40 galvanized steel pipe in lieu of schedule 10 steel pipe. This does increase the cost of dry systems somewhat, however U-M is having significant leakage problems with dry pipe systems utilizing the thin-walled schedule 10 pipe within a few few years after installation, including incidents at the U-M Museum of Art. Due to the corrosion problems dry pipe systems experience, a thicker wall pipe would now be required. Additionally, galvanized pipe is recommended by FM. This change does not impact wet type sprinkler systems, which are the vast majority of sprinkler systems installed at U-M.

Mains and branch lines are required to be pitched at least 1/2 in. per 10 ft in all locations, regardless if in non-refrigerated areas/areas subject to freezing.

Additionally, antifreeze sprinkler systems are banned due to flammability problems with such systems. The State of Michigan recently banned anti freeze systems.

Formatting improvements were also made to the DG.

1.0 Codes and Regulatory Agencies

– Michigan Electrical Code 2012 on page 11 changed to Michigan Electrical Code 2011.
– Asterisk placed next to Building 108 Lawyers Club due to BFS compartmentalization.

– Removed “Website: https://www.ashrae.org/news/2013/ashrae-publishes-revised-standard-on-ventilation-in-health-care-facilities-” from ASHRAE Standard 170-2013 on page 20.
– February 2015 changed to March 2015 in footer.
3.0 Sustainabilit y
Design Guideline DG 3.1 Sustainable Design Requirements

This document has been revised to require visual displays for projects over $10M construction cost. Also, you shall find the AEC Title Block and Sustainable Facts Template.

9.0 Standard Details and Schedules

Tunnel Toolkit
There are two new sheets (TK Cvrsht, TK-9).
Sheet TK-4 was divided into two sheets (TK-4A, TK-4B).
The reference file ‘2331m101 (reference 1)’ was revised and renamed to ‘m101’.
The reference file ‘2331t101 (reference 2)’ was revised and renamed to ‘t101’.
There were numerous changes to the other sheets.

New Mechanical Design Detail 15910002 Laboratory DDC Architecture and Scope of Work.
Equal scope of work will now be placed on both of our approved laboratory controls contractors. The scope of Plant DDC work is reduced. And baseline guidance can now be provided for future internal and external design of lab controls.
March 2015

University of Michigan AEC has updated the Design Guidelines website. The new Design Guideline format is based on a book of chapters. The book of Design Guidelines has been compiled into 10 Chapters. These chapters originated from previous design guideline titles and categories. The goal of the new format is to create streamlined, adaptable categories of subjects for design professionals. Numbers have replaced letter designations to allow for future expansion, and ease in abbreviation for meeting minutes and comments.

The information contained within the Design Guidelines has not changed.

SID (Special Instructions to Designers) documents are now located within their area of technical interest.

New Design Guideline chapters and a reference list of relocated SID documents .

Preferred Manufacturers List

Mechanical PML

This is a quick update to remove grooved coupling mfr.s listed in the PML that are no longer approved in U-M’s master piping specification, and to add approved mfr.s that are listed in the U-M master spec.s to the PML (with an occasional exception).

Outdated expansion joint info revised.
Outdated boiler info deleted.

Master Specifications

MS010000 Div 01 General Requirements

The 017823 – Operation and Maintenance Manuals, 019100 – Full Project Commissioning and 019110 – Project Commissioning for Small Projects sections were revised to incorporate the recent AEC reaffirmation that Contractors shall provide 4 paper copies of O&M manuals and all 4 copies are to be submitted to FIC for distribution. Final Contractor payment will be contingent upon FIC receiving 4 paper copies of the O&M manuals.

MS261100 Unit Substation Specification . The updates include:

- A number of typos and punctuation errors were corrected throughout.
- 1.2.F – clarified that written certification is required prior to energization.
- 1.9.A – clarified the warranty requirements. These are now in better alignment with our general warranty requirements.
- 1.9.A.1 – added a reference to the Substantial Completion date.
- 2.1.F.3 – revised bolt and washer finish to clear zinc.
- 2.1.K – revised metal barriers to barriers
- 2.2.D.6 – clarified the connection between fused switch and transformer
- 2.2.D.9 – refined the rear door requirements
- 2.2.D.14 – clarified the viewing window requirements
- 2.2.E.13 – added position switches for remote indication.
- 2.2.F.2 – updated fuse manufacturer
- 2.2.F.3 and 4 – clarified the role of the Engineer-of-Record in fuse specification and sizing
- 2.3.H.1 – clarified the primary connection type
- 2.4.B and C – clarified CT and PT requirement
- 2.4.F – clarified the blank compartments are not permitted
- 2.4.G.5 – added open and close push buttons
- 2.4.G.17 – added kirk key interlock requirement for tie breakers
- 2.4.J.1.c – clarified control power transfer circuit language
- 2.4.K.1 – revised metering mounting height parameter
- 2.4.K.2.d – clarified current transformers and shorting blocks
- 2.4.K.3.d – deleted redundant height requirement.
- 2.4.K.5 – revised kilowatt meter model number (previous model was discontinued)
- 2.4.K.6.a.4 – added shorting terminal block description
- 3.1.E – added 1″ chamfered edge to pad. Deleted leveling channels.
- 3.1.O and P – added one-inch data conduits for metering and position switches
- 3.2.C – deleted warranty language (clarified in 1.9.A above)
- 3.2.D – added written certification requirement

- 3.2.I – clarified study settings required prior to testing
- 3.4.D – added language to coordinate training sessions and topics

MS283100 Fire Detection and Alarm Specification. The updates include:

- 1.2.A and 1.2.B – deletion of all text related to a “design-build” concept. There have been a number of internal meetings over the past few months to discuss the “design-build” process. At this time, the majority of projects allot designers several months to design a fire alarm system, bidders a few weeks to pull numbers together, and then onto construction. With this process, the electricians are at the mercy of the designers and how well the set is documented, and so they can only bid what they see on the drawings to be competitive. Instead of a true “design-build” process, we’re really structured as “bid-build”. Further discussions are anticipated on the overall process, but for now, we are eliminating this text. It’s not clear that the text added value or savings to projects, just confusion.
- 1.5.K – added a designer hidden note to meter and document maximum ambient sound levels in renovation projects. This is a reminder to the designer to properly field verify, with the anticipation of reducing errors/omissions.
- 1.5.L.1 – added a designer hidden note to include room names on all plans, with offices and multi-person offices differentiated. This is a reminder to the designer to properly document, with the anticipation of reducing errors/omissions.
- 1.5.N.2 – added a designer hidden note to identify make and model of existing FACPs in order to determine whether a cross-tie is feasible. This is a reminder to the designer to properly field verify, with the anticipation of reducing errors/omissions.
- 2.3 – added a designer hidden note to identify the fire alarm control panel as an “Elevator Recall Control and Supervisory Control Unit” in special circumstances. This complies with the latest Codes.
- 2.13 – corrected spelling of “plastic” within designer hidden note.
- 2.23.A.8 – deleted “2007” from the NFPA 72 reference. Keeping this one “date neutral” will save on revisions down the road.

MS 260533 Electrical Materials & Methods The updates include:

- 2.3.J.1.c – added MonoSystems as an acceptable manufacturer for metallic raceways.

February 2015.

Standard Details and Master Specifications

Update our master details to include a radiused bend within the surface raceway (PDF, DGN, and DWG versions for each detail).

26053313 – Dual Channel Raceway Installation

26053315 – Metallic Raceway With Modular Furniture Feed

and update the specifications to accompany the detail revisions (refer to Paragraph 2.3.B).

260533 Electrical Materials and Methods

These revisions should help keep project costs down by easing installation of cables and by minimizing the potential of damage to cables.

Master Specifications

Removed 235239 Fire Tube Boilers (Hot Water)

Removed from the U-M web page because it does not reflect current U-M requirements for such boilers. Having it on the website risks it being used by outside A/Es, causing significant issues on projects.

Technical Sections

DG 102800 Toilet Accessories
Feminine product dispensers are not supported by building services, if requested review operational impact with department.

Added in dimensions of the trash receptacles design professional should plan for.

265600 Exterior Lighting
This revision switches exterior roadway, parking lot, pedestrian and building-mounted lighting from metal halide and fluorescent to LED. This change will increase energy efficiency and lamp longevity, reduce up-lighting, glare and light trespass, and reduce fixture maintenance. Project initial cost right now will be a little higher or a little lower depending upon multiple factors. Because LED prices are continuing to fall, eventually initial cost will always be lower. Energy and maintenance costs will be much lower. Light level requirements remain unchanged.

Codes and Regulatory Agencies
Updated issue date to February 2015

Page 2

– Changed title on table of contents from “State of Michigan Department of Licensing and Regulatory Affairs, Bureau of Fire Services (BFS)” to “State of Michigan Health Care Safety Rules”

Page 6

– Updated Right of Way A2gov.org URL to the new web link

Page 7

– Changed title from “State of Michigan Department of Licensing and Regulatory Affairs, Bureau of Fire Services (BFS)” to “State of Michigan Health Care Safety Rules”

– Included “Bureau of Fire Services (BFS) ((Filed December 23, 2014) Effective February 3, 2015)” after the title

– NFPA 101 – Life Safety Code updated from 2006 to 2012

– Added “Note this requires by reference compliance with NFPA 99 Health Care Facilities Code 2012” at the end of the paragraph

– Updated Administrative rules web site to include the link to the new 2012 code

January 2015.

New Underwriter Insurer Currently under Special Instructions to Designers.

New Lab Design and Safety Under Special Building Areas
Master Specifications
Remove all four specification sections listed under Division 14 – Conveying systems: 142123, 142423, 144200, 146000.
Add the substantially revised and updated:

- Master Specification 142123 – Electric Traction Elevator
- Master Specification 142423 – Hydraulic Elevator

Both specifications were substantially revised to reflect current format and latest code and PML revisions. No significant cost change is associated with the revised specs.

December 2014.

Special Instructions to Designers

SID-L Owner’s Review
Updated the format to match our new DG format.
Updated the language to declarative statements.
Updated the reviewers list to incorporate department name changes.
Added the requirement for the A/E to submit for review an updated Energy and Water Conservation Report.
This DG has been updated to match our current Owner’s Review process.
No impact on project cost.

SID-G Commissioning
The technical changes include:
Two related documents were added and the name of another was updated,
Spec numbers were updated to match the current 6-digit numbering system.
Revision dates were removed for the reference documents.
Commissioning Authority work scope was clarified.
It has been updated to match our current commissioning processes and updated to match or current DG format.
This revision should have no impact on project cost.

Master Specifications

MS 235716 Steam-To-Water Heat Exchangers – New

MS 220523 Valves
Changes:

- Revised to strike ball valve mfr.s no longer approved or available.
- Add specific Jomar model number ball valve as approved
- Strike Grinnell GHP since it's the same valve as the Keystone that has proven unreliable.
- Restricted use of lead free valves to potable water systems only due to soldering challenges.

MS 221113 Piping Materials & Methods
Add George Fischer as approved for PP pressure piping, add material requirements for storm and sanitary pump discharge piping. Add general requirements for plastic pipe hangers/supports. Per Plumbing and FP MTT.

Technical Section

230030 Laboratory Ventilation Design
Revised: Velocity requirement for snorkels and similar devices added. See page 7.
No cost impact.

Standard Details

Updated detail – 27200009 – Area of Refuge Two-way Comm System
We had updated the DGN version in November, but the PDF and DWG versions were not updated. The PDF and DWG versions now match the DGN version.

New Tunnel Toolkit drawing: TK-12 Tunnel Temporary Shoring Detail.

Procedures and Guidelines for Exterior Elements

Guildelines for Installing Antennas on University Buildings or Structures
Contact person was change from Julie Truettner to Tony Catchot.

© 2018 Regents of the University of Michigan
Design by Michigan Creative
326 East Hoover, Ann Arbor, MI 48109-1002
Phone: (734) 763-3020
Contact Us

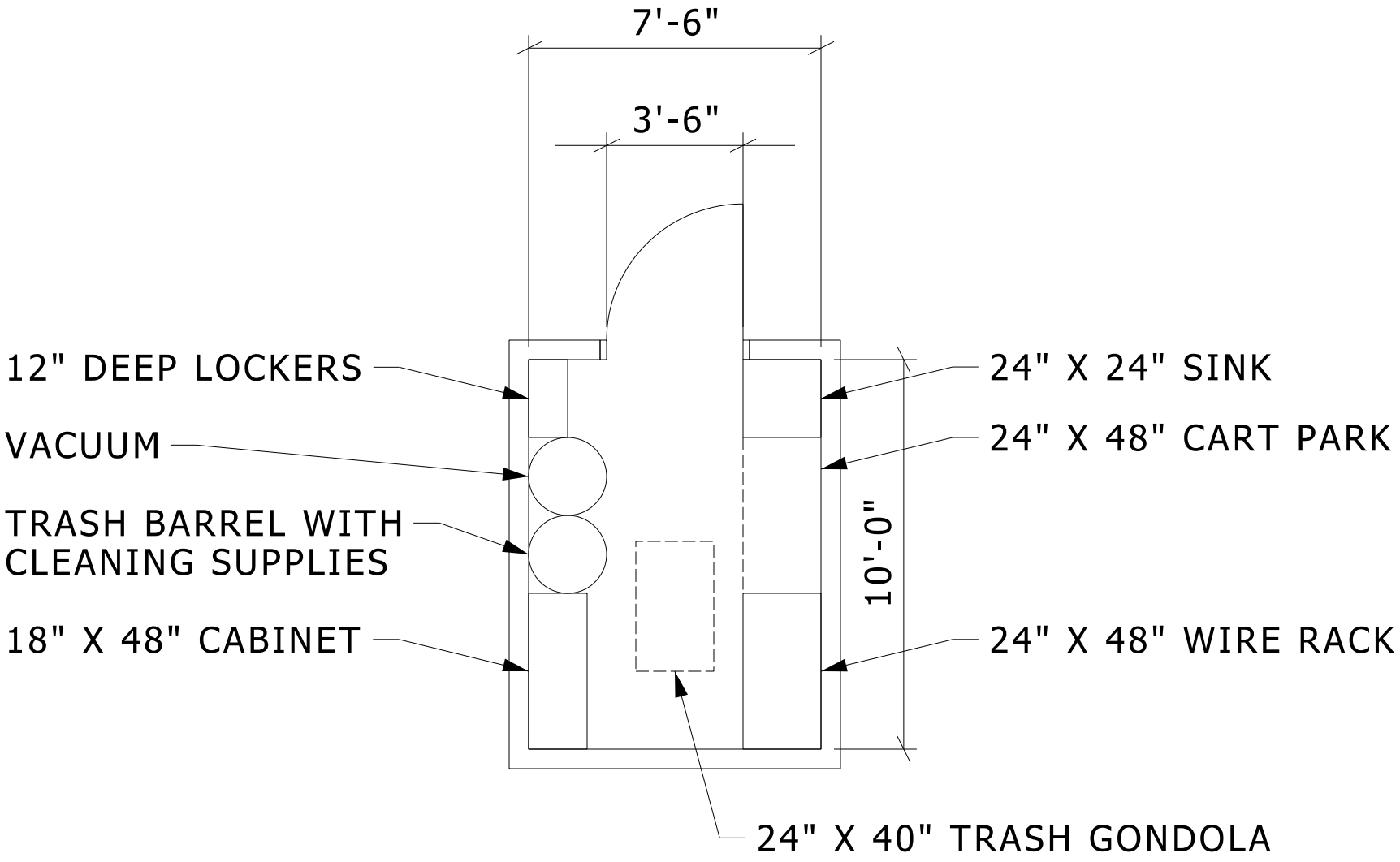

CUSTODIAL ROOM

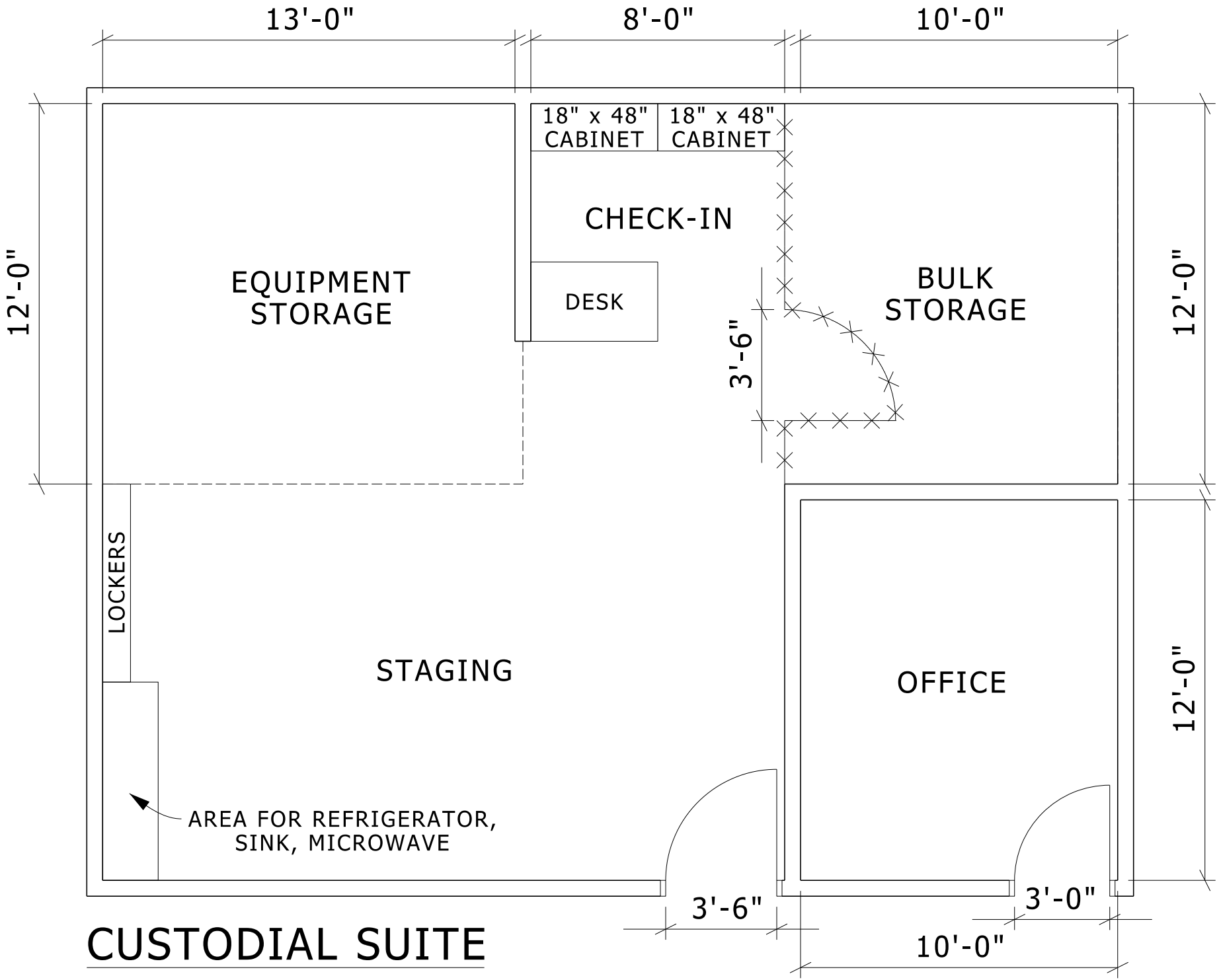

CUSTODIAL SUITE

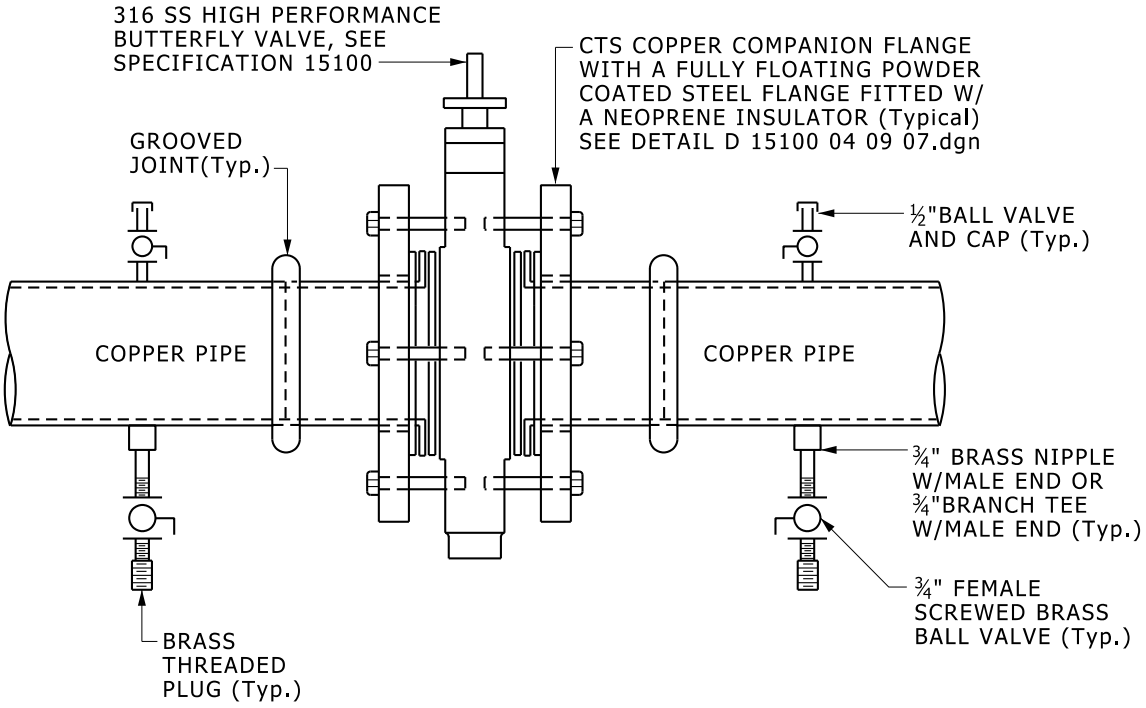

APPLIES TO DHW PIPING

VALVE INSTALLATION DETAIL

NO SCALE

D 15100 02 11 09.dgn

REFERENCED DETAILS/SCHEDULES:

ADDITIONAL INFORMATION:

MODULES: 1

UNIVERSITY OF MICHIGAN
ARCHITECTURE, ENGINEERING AND CONSTRUCTION

ARCHITECTURE & ENGINEERING
326 East Hoover, Mail Stop B
Ann Arbor, MI 48109-1002
Phone: 734-764-3414
Fax: 734-936-3334

DHW Valve Installation Detail

DIVISION: 15
SECTION: 15100
FILE: D 15100 02 11 09.dgn
ISSUE DATE: 09/17/07

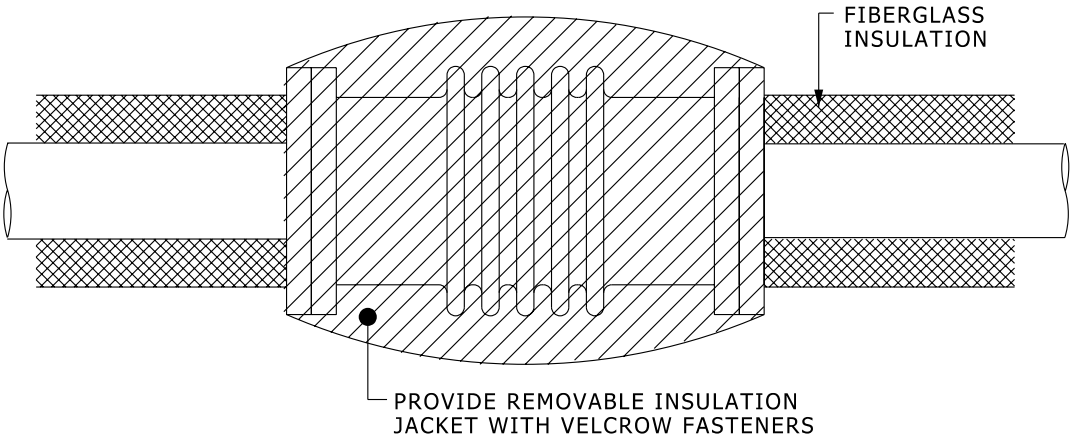

APPLIES TO LPS, HPS & LPC EXPANSION JOINTS

EXPANSION JOINT DETAIL

NO SCALE D 15125 01 09 07.dgn

REFERENCED DETAILS/SCHEDULES:
S 15125 01

ADDITIONAL INFORMATION:

MODULES: 1

UNIVERSITY OF MICHIGAN
ARCHITECTURE, ENGINEERING AND CONSTRUCTION

ARCHITECTURE & ENGINEERING
326 East Hoover, Mail Stop B
Ann Arbor, MI 48109-1002
Phone: 734-764-3414
Fax: 734-936-3334

Expansion Joint Detail For LPS, HPS and LPC

DIVISION: 15
SECTION: 15125
FILE: D 15125 01 09 07.dgn
ISSUE DATE: 09/05/07

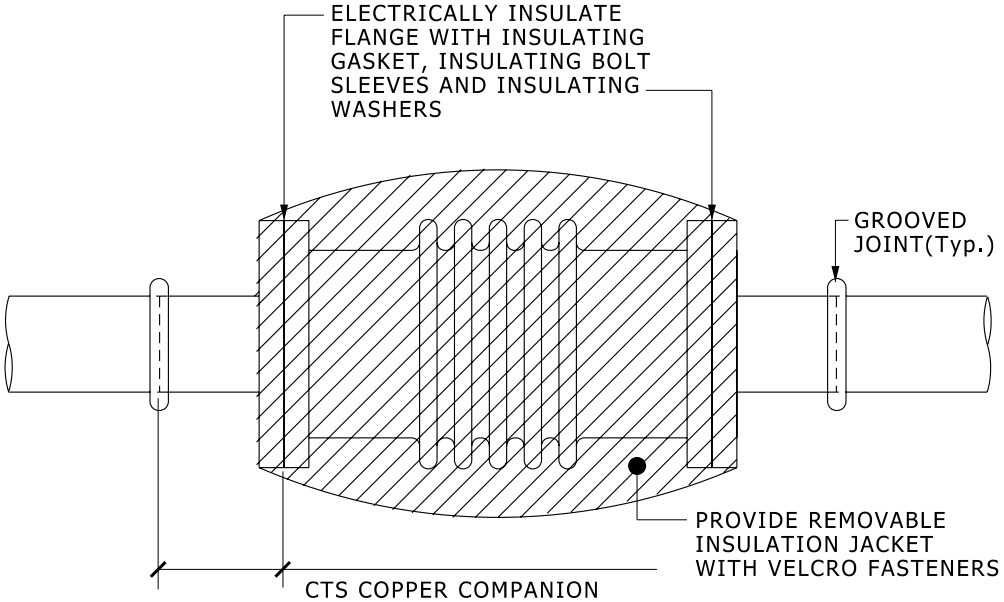

NOTE:
BELLOWS EXPANSION JOINT SHALL BE 316 STAINLESS STEEL

APPLIES TO DHW EXPANSION JOINTS

EXPANSION JOINT DETAIL

NO SCALE

D 15125 02 09 07.dgn

REFERENCED DETAILS/SCHEDULES:

ADDITIONAL INFORMATION:

MODULES: 1

UNIVERSITY OF MICHIGAN
ARCHITECTURE, ENGINEERING AND CONSTRUCTION

ARCHITECTURE & ENGINEERING
326 East Hoover, Mail Stop B
Ann Arbor, MI 48109-1002
Phone: 734-764-3414
Fax: 734-936-3334

Domestic Hot Water Expansion Joint Detail

DIVISION: 15
SECTION: 15125
FILE: D 15125 02 09 07.dgn
ISSUE DATE: 09/17/07

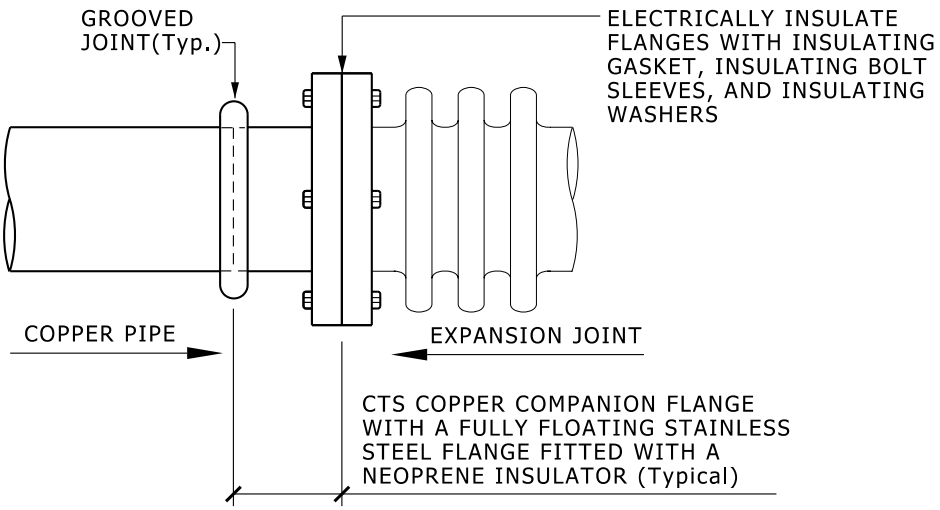

EXPANSION JOINT INSTALLATION DETAIL

NO SCALE

D 15125 03 09 07.dgn

REFERENCED DETAILS/SCHEDULES:
S 15125 01

ADDITIONAL INFORMATION:

MODULES: 1

UNIVERSITY OF MICHIGAN
ARCHITECTURE, ENGINEERING AND CONSTRUCTION

ARCHITECTURE & ENGINEERING
326 East Hoover, Mail Stop B
Ann Arbor, MI 48109-1002
Phone: 734-764-3414
Fax: 734-936-3334

Expansion Joint
DHW Installation Detail

DIVISION: 15
SECTION: 15125
FILE: D 15125 03 09 07.dgn
ISSUE DATE: 09/05/07

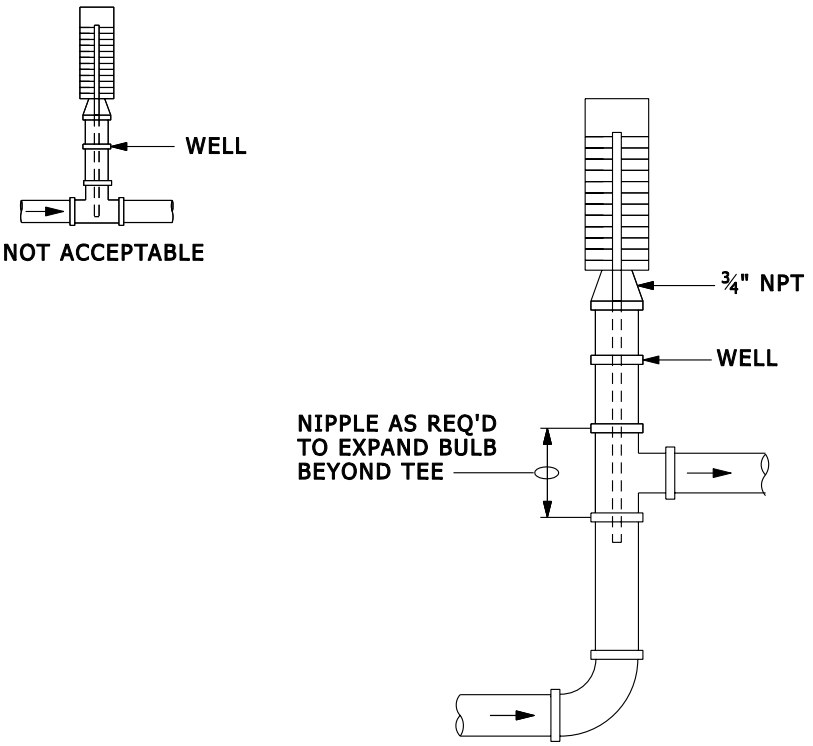

THERMOMETER INSTALLATION DETAIL

NO SCALE FOR PIPING 1" THRU 2"

D 15130 001 05 04.dgn

5/24/2006 8:59:22 AM CARLOSW Q:\AES\MECH\Mech Tech Teams\Ready for Approval\hydronics & steam\D 15130 001 05 04.dgn

REFERENCED DETAILS/SCHEDULES:
XXXX S XXXXX XXX

ADDITIONAL INFORMATION:

MODULES: X

THE UNIVERSITY OF MICHIGAN
PLANT EXTENSION
ARCHITECTURE, ENGINEERING & CONSTRUCTION
ARCHITECTURAL AND ENGINEERING SERVICES
326 EAST HOOVER STREET
ANN ARBOR, MI 48109-1002

Thermometer Installation Detail

DIVISION: 15
SECTION: 15130
FILE: D 15130 001 05 04.dgn
ISSUE DATE: 05/25/04

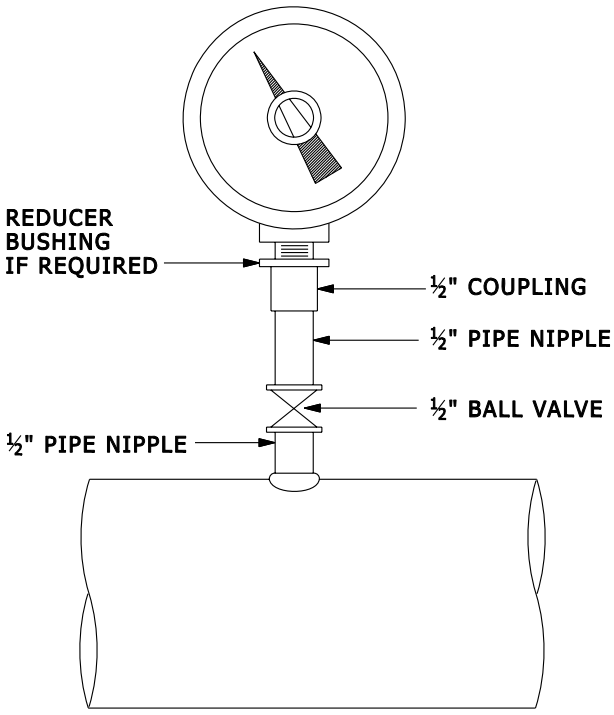

PRESSURE GAUGE DETAIL

NO SCALE

D 15130 002 05 04.dgn

5/24/2006 9:07:28 AM CARLOSW Q:\AES\MECH\Mech Tech Teams\Ready for Approval\hydronics & steam\D 15130 002 05 04.dgn

REFERENCED DETAILS/SCHEDULES:
XXXX S XXXXX XXX

ADDITIONAL INFORMATION:

MODULES: X

THE UNIVERSITY OF MICHIGAN
PLANT EXTENSION
ARCHITECTURE, ENGINEERING & CONSTRUCTION
ARCHITECTURAL AND
ENGINEERING SERVICES
326 EAST HOOVER STREET
ANN ARBOR, MI 48109-1002

Pressure Gauge Detail

DIVISION: 15
SECTION: 15130
FILE: D 15130 002 05 04.dgn
ISSUE DATE: 05/25/04

NOTE:

1. SUPPORT PIPING SO THAT THERE IS NO WEIGHT ON PUMP.
2. PROVIDE INERTIA BASE WHEN REQUIRED BY SPECIFICATION, OTHER DETAILS OR SCHEDULES.

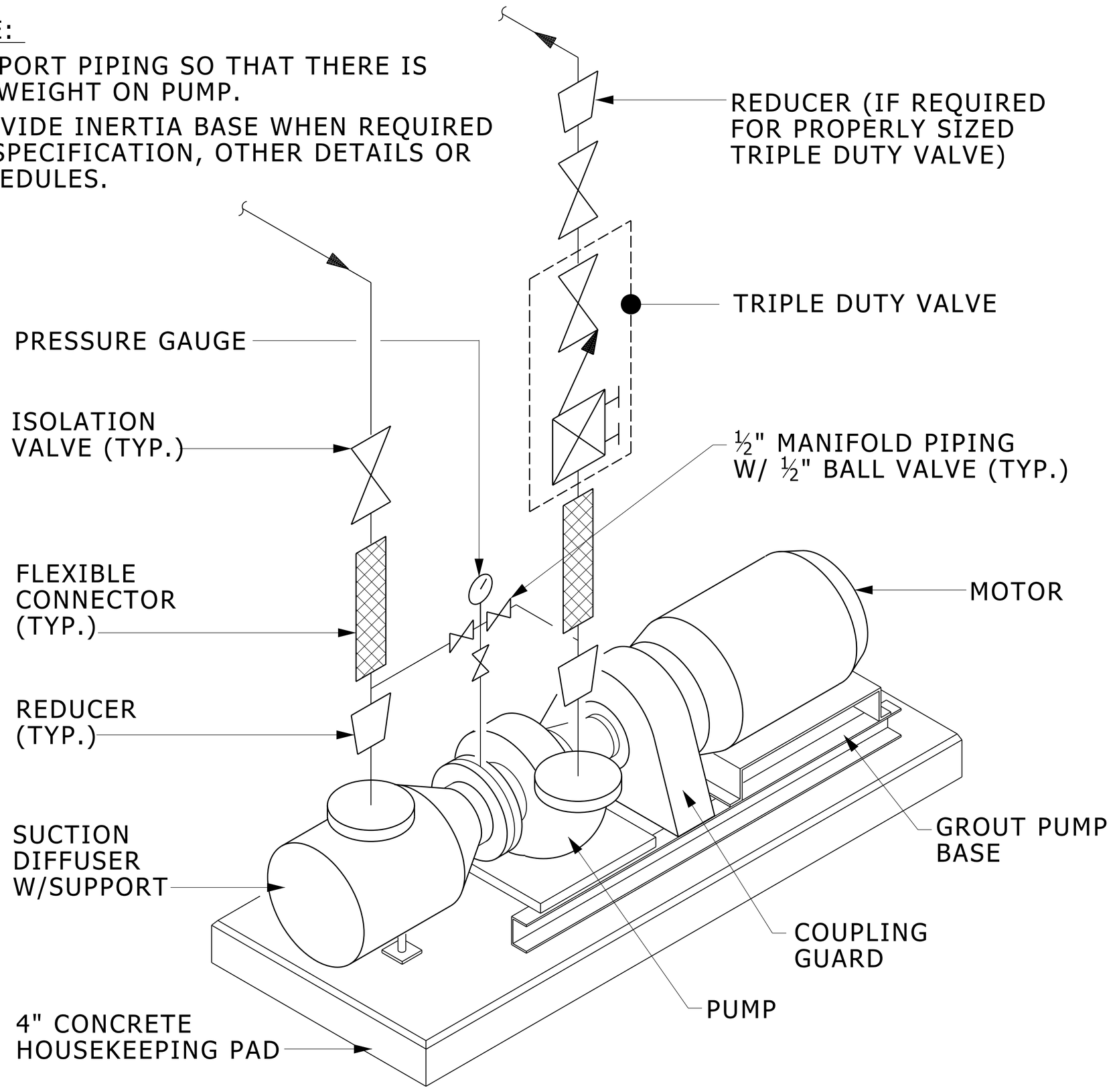

END SUCTION PUMP INSTALLATION DETAIL

NO SCALE

D 15160 001 11 12.dgn

DESIGNER NOTES: FOR VARIABLE VOLUME SYSTEMS, DELETE TRIPLE DUTY VALVE AND SHOW A CHECK VALVE INSTEAD.

REFERENCED DETAILS/SCHEDULES:

S 15160 001

ADDITIONAL INFORMATION:

MODULES: X

UNIVERSITY OF MICHIGAN
ARCHITECTURE, ENGINEERING AND CONSTRUCTION

ARCHITECTURE & ENGINEERING
326 East Hoover, Mail Stop B
Ann Arbor, MI 48109-1002
Phone: 734-764-3414
Fax: 734-936-3334

End Suction Pump Installation Detail

DIVISION: 15
SECTION: 15160
FILE: D 15160 001 11 12.dgn
ISSUE DATE: 11/01/12

11/1/2012 1:39:32 PM S:\Project Support\Details\Mech\15160 Pumps\D 15160 001 11 12.dgn carlosw

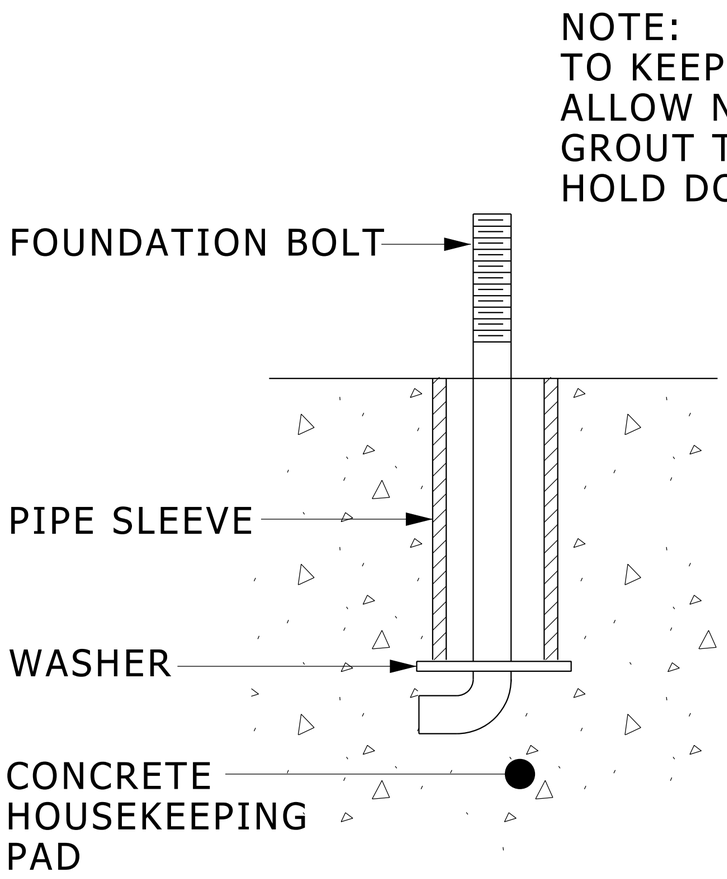

FIGURE 1

NOTE:
TO KEEP SHIMS IN PLACE
ALLOW NON-SHRINKING
GROUT TO FLOW AROUND
HOLD DOWN LUGS

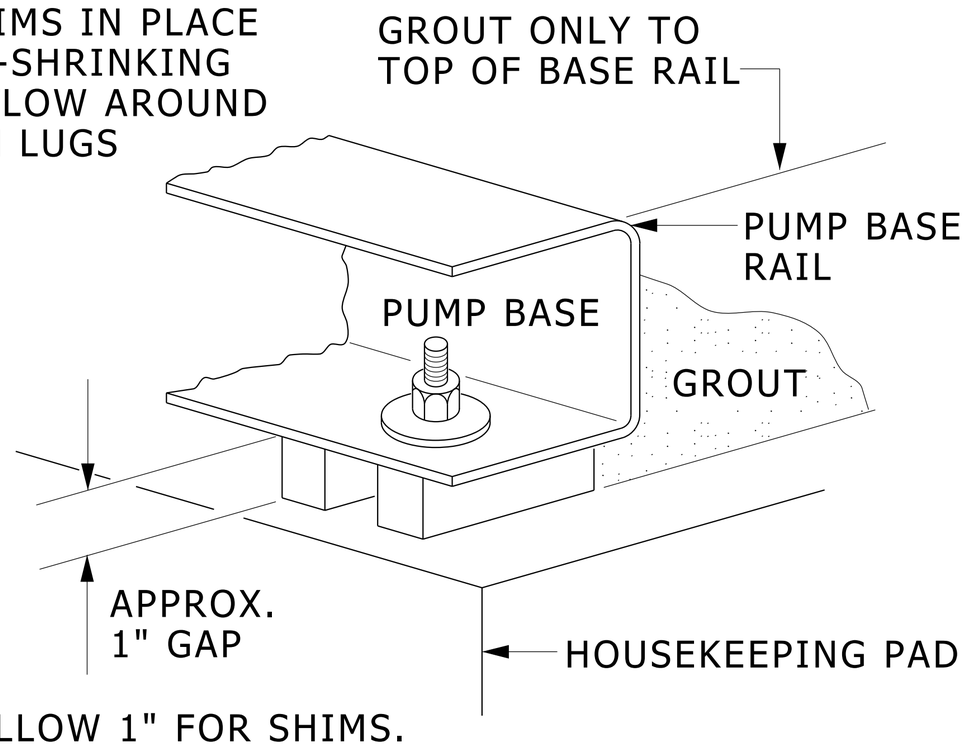

ALLOW 1" FOR SHIMS.
PLACE ON BOTH SIDES
OF ANCHOR BOLTS

FIGURE 2

INSTALLATION NOTES

1. INSTALL FOUNDATION BOLTS IN NEW CONCRETE HOUSEKEEPING PAD (SEE FIGURE 1).
2. PLACE PUMP ON HOUSEKEEPING PAD SUPPORTING IT WITH SHIMS TOTALING 1" IN THICKNESS. SHIMS SHOULD BE PUT ON BOTH SIDES OF EACH ANCHOR BOLT AS A MEANS OF LEVELING THE BASE. (SEE FIGURE 2)
3. AFTER PUMP HAS BEEN LEVELED, SECURELY BOLTED TO FLOOR AND PROPERLY ALIGN PER SPECIFICATION. NON-SHRINKING GROUT IS TO BE POURED INTO PUMP BASE. TO HOLD SHIMS IN PLACE ALLOW THE GROUT TO FLOW AROUND THEM. (SEE FIGURE 2).

PUMP BASE INSTALLATION DETAIL

NO SCALE

D 15160 002 11 12.dgn

11/1/2012 1:42:00 PM S:\Project Support\Details\Mech\15160 Pumps\D 15160 002 11 12.dgn carlosw

REFERENCED DETAILS/SCHEDULES:
D 15160 001 D 15160 003
D 15160 005 D 15160 006
ADDITIONAL INFORMATION:

MODULES: 1

UNIVERSITY OF MICHIGAN
ARCHITECTURE, ENGINEERING AND CONSTRUCTION

ARCHITECTURE & ENGINEERING
326 East Hoover, Mail Stop B
Ann Arbor, MI 48109-1002
Phone: 734-764-3414
Fax: 734-936-3334

Pump Base Installation Detail

DIVISION: 15
SECTION: 15160
FILE: D 15160 002 11 12.dgn
ISSUE DATE: 11/01/12

NOTE:

1. SUPPORT PIPING SO THAT THERE IS NO WEIGHT ON PUMP.
2. PROVIDE INERTIA BASE WHEN REQUIRED BY SPECIFICATION, OTHER DETAILS OR SCHEDULES.

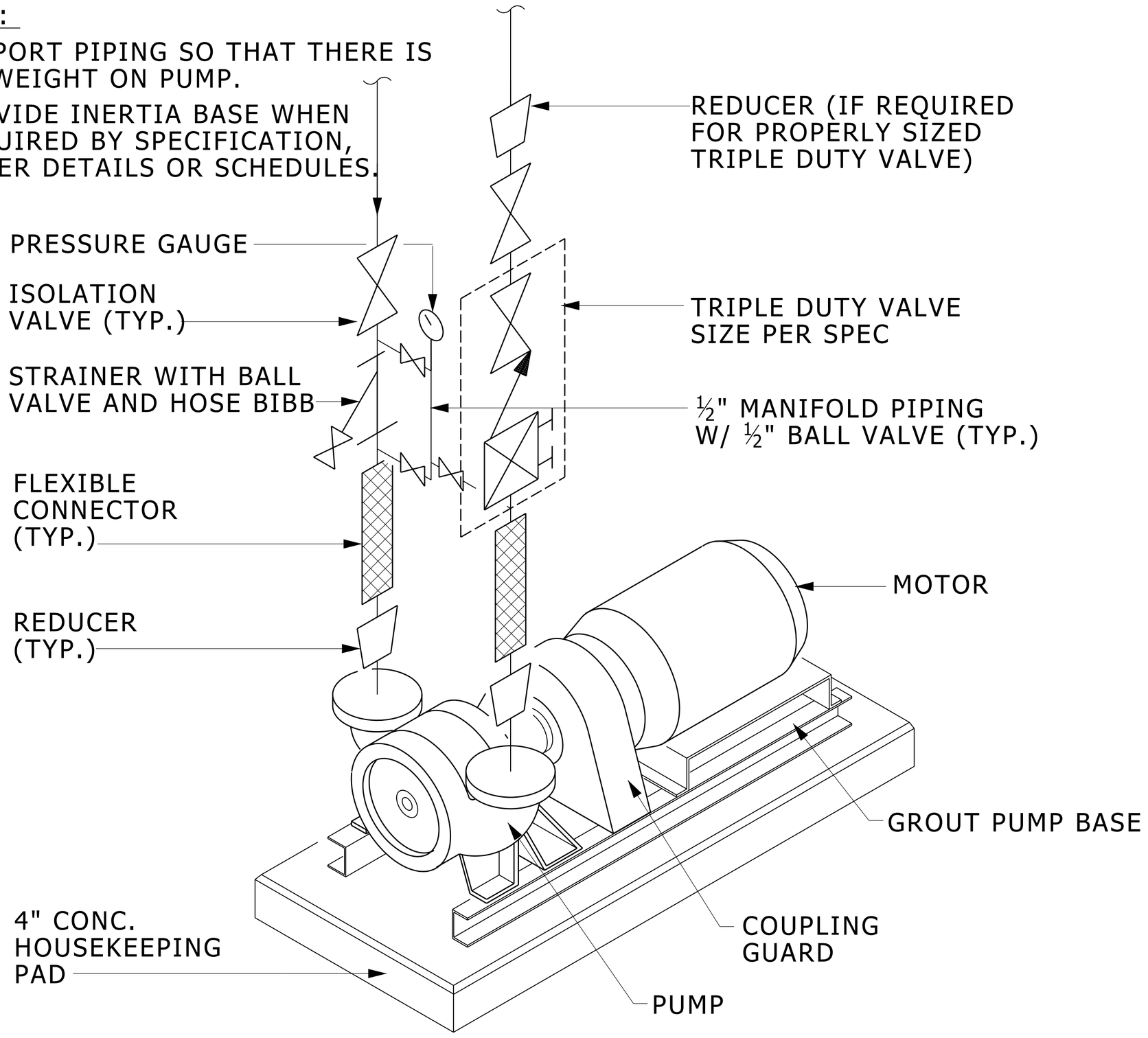

VERTICAL SPLIT CASE PUMP INSTALLATION DETAIL

NO SCALE

D 15160 003 11 12.dgn

DESIGNER NOTE: FOR VARIABLE VOLUMNE SYSTEMS, DELETE TRIPLE DUTY VALVE AND SHOW A CHECK VALVE INSTEAD.

REFERENCED DETAILS/SCHEDULES:
S 15160 001 S 15130 001 D 15160 002

ADDITIONAL INFORMATION:

MODULES: 1

UNIVERSITY OF MICHIGAN
ARCHITECTURE, ENGINEERING AND CONSTRUCTION

ARCHITECTURE & ENGINEERING
326 East Hoover, Mail Stop B
Ann Arbor, MI 48109-1002
Phone: 734-764-3414
Fax: 734-936-3334

Vertical Split Case Pump Installation Detail

DIVISION: 15
SECTION: 15160
FILE: D 15160 003 01 12.dgn
ISSUE DATE: 11/01/12

11/1/2012 11:23:39 AM S:\Project Support\Details\Mech\15160 Pumps\D 15160 003 11 12.dgn carlosw

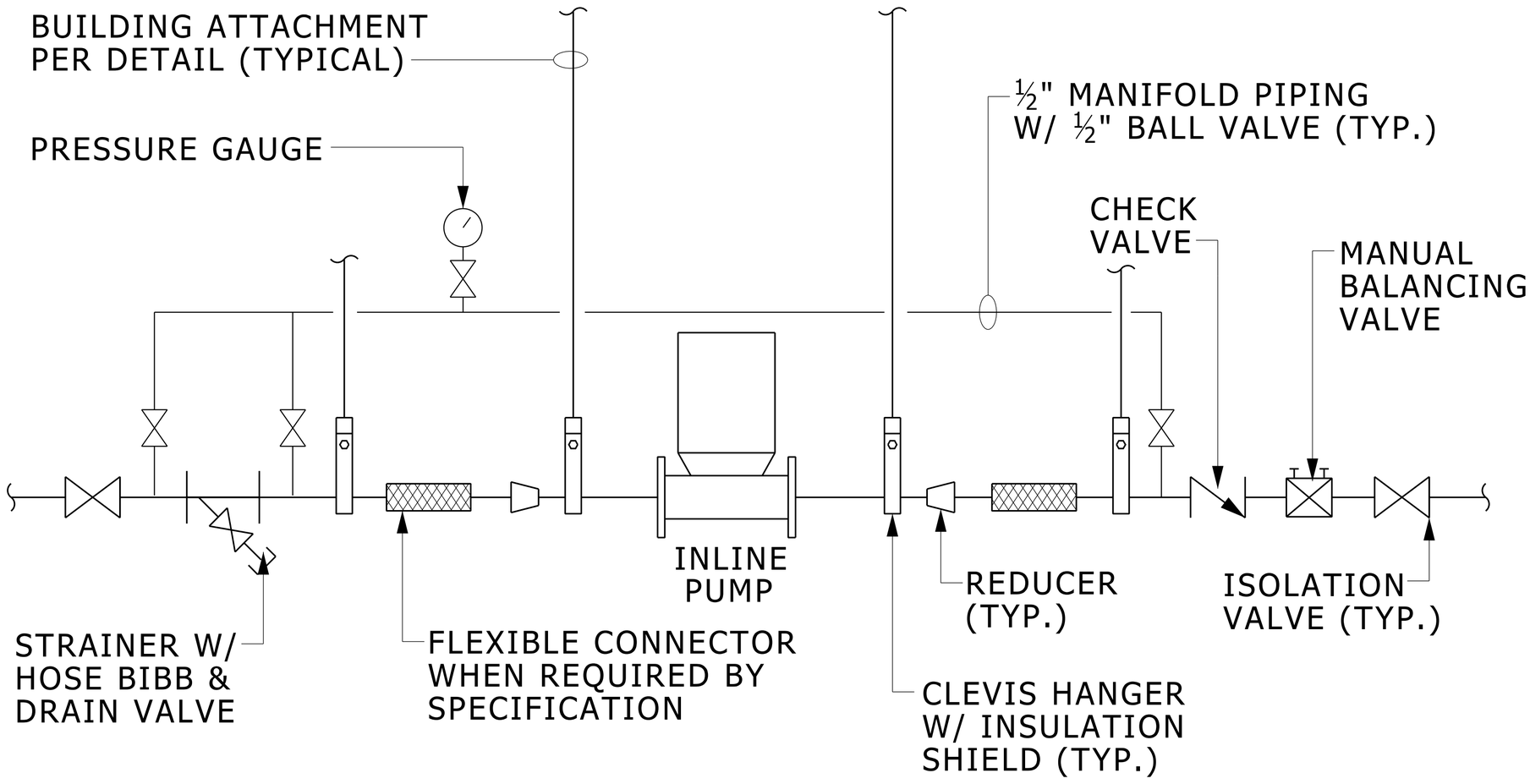

NOTES:

1. WHERE POSSIBLE SUPPORT PUMP DIRECTLY (RATHER THAN FROM ADJACENT PIPING) PER MANUFACTURER'S INSTALLATION MANUAL
2. ORIENT PUMP AND MOTOR PER MANUFACTURER'S AND PROJECT SPECIFIC ACCESS REQUIREMENTS

INLINE PUMP - PIPING AND INSTALLATION DETAIL

NO SCALE

D 15160 004 11 12.dgn

DESIGNER NOTE:

IF FLEXIBLE CONNECTORS NOT REQUIRED, REMOVE FROM DRAWING. GENERALLY NOT REQUIRED FOR PIPING 1½" OR SMALLER.

REFERENCED DETAILS/SCHEDULES:
S 15130 001 S 15160 001

ADDITIONAL INFORMATION:

MODULES: 1

UNIVERSITY OF MICHIGAN
ARCHITECTURE, ENGINEERING AND CONSTRUCTION

ARCHITECTURE & ENGINEERING
326 East Hoover, Mail Stop B
Ann Arbor, MI 48109-1002
Phone: 734-764-3414
Fax: 734-936-3334

Inline Pump - Piping And Installation Detail

DIVISION: 15
SECTION: 15160
FILE: D 15160 004 11 12.dgn
ISSUE DATE: 11/01/12

S:\Project Support\Details\Mech\15160 Pumps\D 15160 004 11 12.dgn
carlosw
11/1/2012 1:45:26 PM

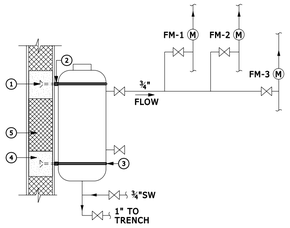

KEY NOTES

1. ½" HILTI, KWIK BOLT II S.S. MIN. 4 ½" EMBEDMENT FOR EACH BRACKET TYP. OF 2)
2. UNISTRUT P1000 16" LONG (TYP.)
3. CUSH-A-CLAMP UNISTRUT UB10PA (TYP.)
4. GROUT BLOCK WALL AS REQUIRED TO HOLD CONCRETE ANCHORS.
5. EXISTING BLOCK WALL
6. WALL MOUNTING SHOWN, FLOOR MOUNTED UNITS ACCEPTABLE

WALL MOUNTED TANK AND PIPING SCHEMATIC

SHOT FEEDER:

FURNISH AND INSTALL ONE SHOT FEEDER (GALLOUP SUPPLY MODEL CP-6 OR VENTURE VI MODEL SF-W-10). THE FEEDER SHALL CONSIST OF A TANK BODY, THREADED, GASKETED REMOVABLE TOP, MINIMUM SIZE 4" FOR INTRODUCTION OF CHEMICAL (DRY OR LIQUID), AND DRAIN & VENT PETCOCKS. FUNNEL TYPE TOPS ARE NOT ACCEPTABLE.

THE FEEDER SHALL BE PIPED AS SHOWN ON STEAM BOILER WATER TREATMENT SCHEMATIC.

THE FEEDER SHALL BE FIRMLY WALL OR FLOOR MOUNTED AND NOT SUPPORTED BY THE SUPPLY AND RETURN PIPING. THE FEEDER TOP OPENING SHOULD NOT BE MORE THAN 48 INCHES ABOVE THE FLOOR TO AVOID ANY SPLASHING OF CHEMICALS ON THE OPERATOR.

SIZE OF THE SHOT FEEDER SHALL BE MINIMUM TEN GALLONS.

BOILER FEED WATER SYSTEM, WATER TREATMENT CHEMICAL:

U OF M WILL FURNISH AND ADMINISTER THE APPROPRIATE NON-CHROMATE CONTAINING CORROSION INHIBITOR.

BOILER FEED WATER SHOT FEEDER DETAIL

NO SCALE

STEAM BOILER CHEMICAL TREATMENT SYSTEM OPERATION AND REQUIREMENTS

AMINE INJECTION: AMINE IS PUMPED INTO THE STEAM HEADER FROM A CHEMICAL DRUM WITH A PUMP. THE RUN TIME OF THE PUMP IS CONTROLLED BY A TIMER, ADJUSTED MANUALLY. THE TIMER IS DIRECTLY WIRED TO A CIRCUIT AND THE PUMP PLUGS IN TO THE TIMER. AN ISOLATION VALVE AND AN INJECTION QUILL TO INJECT THE AMINE IN TO THE HEADER IS REQUIRED. NO INTERLOCKS TO PREVENT THE OPERATION OF THE PUMP WHEN THERE IS NO BOILER ON LINE IS REQUIRED. IT WILL BE DONE MANUALLY. THE CHEMICAL TUBING FROM THE PUMP TO THE HEADER SHALL BE STAINLESS STEEL. THE UNIVERSITY (JOE COMPTON) WILL PROVIDE THE AMINE AND AMINE DRUM. THE PROJECT SHALL PROVIDE PUMP, TIMER, INTERCONNECTING PIPING AND ALL THE ELECTRICAL WORK. PUMP SHALL BE MADE BY MILTON ROY MODEL A171-155. TIMER SHALL BE OMRON MODEL H3CR-F3, ADJUSTABLE 1.2 SEC. TO 30 HOURS.

SULFITE INJECTION: SULFITE IS ADDED DIRECTLY FROM A CHEMICAL DAY TANK BY A PUMP IN TO THE BOILER FEED WATER UNIT OR THE DE-AERATOR. THE SULFITE PUMP IS CONTROLLED BY THE LAKEWOOD CONTROLLER (BOILER CONDUCTIVITY CONTROLLER). THE SULFITE TANK IS TO BE PROVIDED WITH A MIXER CONTROLLER BY LAKEWOOD CONTROLLER TO START WITH THE PUMP. PROVIDE A TIMER TO TIMEOUT AND STOP THE MIXER PRIOR TO PUMP. THE PROJECT SHALL PROVIDE THE DAYTANK WITH AGITATOR, INJECTION PUMP, THE REQUIRED ELECTRICAL WORK AND MOUNTING MEANS ETC.

SHOT FEEDER REQUIREMENT: PROVIDE A SHOT FEEDER AS DETAILED FOR ADDING CHEMICALS MANUALLY. NO CHEMICALS ARE REQUIRED. THE SHOT FEEDER SHALL BE PIPED AS SHOWN IN THE SCHEMATICS.

WATER METERS: PROVIDE TWO WATER METERS IN THE SOFT WATER MAKE UP LINE TO THE BOILER FEED WATER UNIT OR DE-AERATOR, UPSTREAM OF THE MAKE UP WATER FLOW CONTROL VALVE AS SHOWN IN THE SCHEMATICS. MADE BY OSMONICS, AUTOTROL TURBINE TYPE, COMPATIBLE WITH THE OSMONICS-LAKEWOOD CONTROLLER TO BE PROVIDED. WM-1 IS WIRED TO ONE OF THE LAKEWOOD CONTROLLERS. WM-2 IS A STANDARD WATER METER BY NEPTUNE OR BADGER, SUITABLE FOR SOFT WATER (AND OR RO WATER IN FUTURE) WITH A TOTALIZING DIAL. WM-2 IS PRIMARILY INTENDED FOR READING THE METER REGULARLY, TWICE A DAY AND LOGGING THE DAILY MAKE UP QUANTITY. THE PROJECT SHALL PROVIDE THE WATER METERS AND THE WIRING BETWEEN THE WATER METER AND THE LAKEWOOD CONTROLLERS.

LAKE WOOD CONTROLLER, CAUSTIC AND COMPOUND WATCON 1238: LAKE-WOOD CONTROLLER TO CONTROL THE BOILER WATER CONDUCTIVITY SHALL BE BOILER WATER CONDUCTIVITY CONTROLLER, MODEL 2250 MADE BY OSMONICS - LAKEWOOD INSTRUMENTS CO. ONE CONTROLLER SHALL BE PROVIDED FOR EACH BOILER. WM-1, WATER METER IS WIRED TO ONE OF THE LAKEWOOD CONTROLLERS. THE LAKE WOOD CONTROLLER CYCLES THE SURFACE BLOW DOWN IN THE CORRESPONDING BOILER AUTOMATICALLY THE BASED (TDS) TOTAL DISSOLVED SOLID AS MEASURED BY THE SENSOR IN THE BLOW DOWN WATER FROM THE CORRESPONDING BOILER. LAKEWOOD CONTROLLER ALSO CONTROLS THE AMOUNT OF CAUSTIC INJECTED AND THE AMOUNT OF WATCON 1238 INJECTED IN TO EACH BOILER BASED ON THE AMOUNT OF BLOW DOWN. PROVIDE ONE PUMP FOR EACH BOILER FOR CHEMICAL WATCON 1238. FOR CAUSTIC, ONE COMMON PUMP AND A SOLENOID FOR EACH BOILER SHALL BE PROVIDED. A LEVEL INDICATOR, BURKERT EASY LEVEL MODEL 8175, SHALL BE PROVIDED FOR THE CAUSTIC TANK. THE LAKEWOOD CONTROLLER FOR EACH BOILER WILL CYCLE THE WATCON 1238 PUMP AS REQUIRED. THE LAKEWOOD CONTROLLER FOR EACH BOILER WILL START THE CAUSTIC PUMP AND OPEN CORRESPONDING SOLENOID VALVE TO INJECT THE CAUSTIC INTO THE BOILER. THE PROJECT SHALL PROVIDE THE REQUIRED LAKEWOOD CONTROLLERS, THE SOLENOID VALVES, PUMPS, PIPING AS SHOWN FOR BLOW DOWN, CONDUCTIVITY SENSOR AND ALL THE RELATED ELECTRICAL WIRING. ALL THE CHEMICALS, CAUSTIC AND WATCON 1238 N DRUMS WILL BE PROVIDED BY THE UNIVERSITY. PUMP SHALL BE MADE MILTON ROY MODEL B121-958. THE SOLENOID VALVES SHALL BE MADE BY ASCO MODEL 8210G375. THE LAKEWOOD CONTROLLER SHALL BE WALL MOUNTED OR MOUNTED ON A UNIT STRUT FRAME. ALL THE LOCATIONS, MOUNTING DETAILS SHALL BE SHOWN IN THE PLANS AND DETAILS.

WATER SOFTENER: PROVIDE A WATER SOFTENER SYSTEM SIZED ADEQUATELY TO PROVIDE ALL THE MAKE UP WATER REQUIREMENTS AND ALSO TO PROVIDE START UP WATER TO FILL THE BOILER AFTER ANNUAL INSPECTIONS.

FEED WATER FLOW METERS: EACH BOILER FEED WATER LINE SHALL INCORPORATE A MAG METER, WITH A TOTALIZER, AS DETAILED IN THE PLANS TO MONITOR THE BOILER FEED WATER FLOW INSTANTANEOUSLY AND FOR USE DURING PERFORMANCE TESTING. THE MAG METER SHALL BE AS SPECIFIED UNDER THE SPECIFICATION FOR DDC CONTROLS WITH LINING RATED FOR THE FEED WATER QUALITY AND TEMPERATURE.

CONTAINMENT: PROVIDE DYKES AND OTHER REQUIRED CHEMICAL CONTAINMENT SYSTEM PER MIOSHA AND OSEH (U OF M OCCUPATIONAL SAFETY AND ENVIRONMENTAL HEALTH DEPARTMENT).

IF RO WATER IS USED FOR MAKE UP WE CAN ELIMINATE THE LAKEWOOD CONTROLLERS AND RELATED COMPONENTS. BUT WE WILL STILL NEED THE SOFTENER DUE TO THE FACT THAT RO SYSTEM WILL NOTBE SIZED FOR START UP LOAD CAPACITY AND WE WILL NEED SOFT WATER FOR START UP. THE SOFTENER WILL BE LOCKED OUT DURING NORMAL OPERATION AND RO WATER WILL BE USED FOR MAKE UP. HIGH PURITY RO WATER IS TOO AGGRESSIVE FOR BOILER WATER MAKE UP. IF RO WATER OF RIGHT QUALITY IS AVAILABLE IT SHOULD BE USED, THE LAKEWOOD CONTROLLER, 1238 AND CAUSTIC SYSTEMS ELIMINATED. THIS IS A DECISION TO BE MADE ON LIFE CYCLE COST ANALYSIS TO BE MADE BY THE DESIGN ENGINEER.

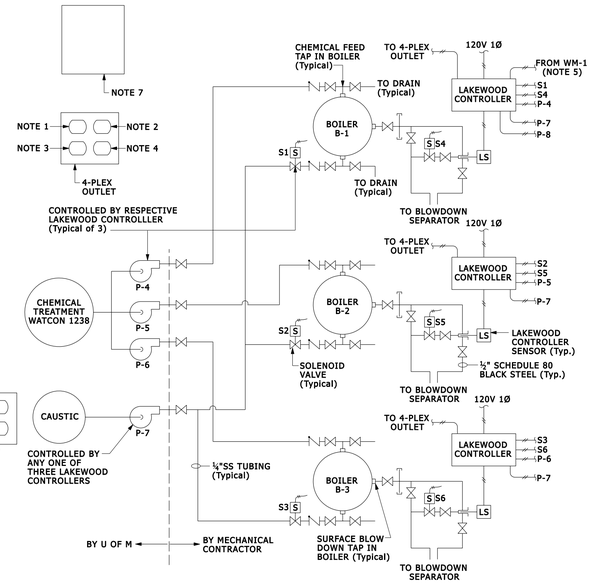

NOTES

NOTE 1: THIS OUTLET IS CONTROLLED BY LAKEWOOD CONTROLLER FOR BOILER 1. WATCON 1238 PUMP FOR BOILER 1 PLUGS INTO THIS OUTLET.

NOTE 2: THIS OUTLET IS CONTROLLED BY LAKEWOOD CONTROLLER FOR BOILER 2. WATCON 1238 PUMP FOR BOILER 2 PLUGS INTO THIS OUTLET.

NOTE 3: THIS OUTLET IS CONTROLLED BY LAKEWOOD CONTROLLER FOR BOILER 3. WATCON 1238 PUMP FOR BOILER 3 PLUGS INTO THIS OUTLET.

NOTE 4: THIS OUTLET IS CONTROLLED BY ANYONE OF THE THREE LAKEWOOD CONTROLLERS. CAUSTIC PUMP PLUGS INTO THIS OUTLET.

NOTE 5: WM-1 CAN BE CONNECTED TO ANYONE OF THE LAKEWOOD CONTROLLERS.

NOTE 6: PROVIDE A DEDICATED OUTLET FOR A LEVEL INDICATOR FOR THE CAUSTIC SYSTEM. POWER TO OUTLET AT ALL TIMES.

NOTE 7: PROVIDE A AUXILIARY RELAY PANEL NEMA 1 MINIMUM 24"x24" TO HOUSE ALL THE REQUIRED RELAYS AND TIMERS, TO ACHIVE THE CONTROL SEQUENCES DESCRIBED.

STEAM BOILER CHEMICAL TREATMENT SCHEMATIC

NO SCALE

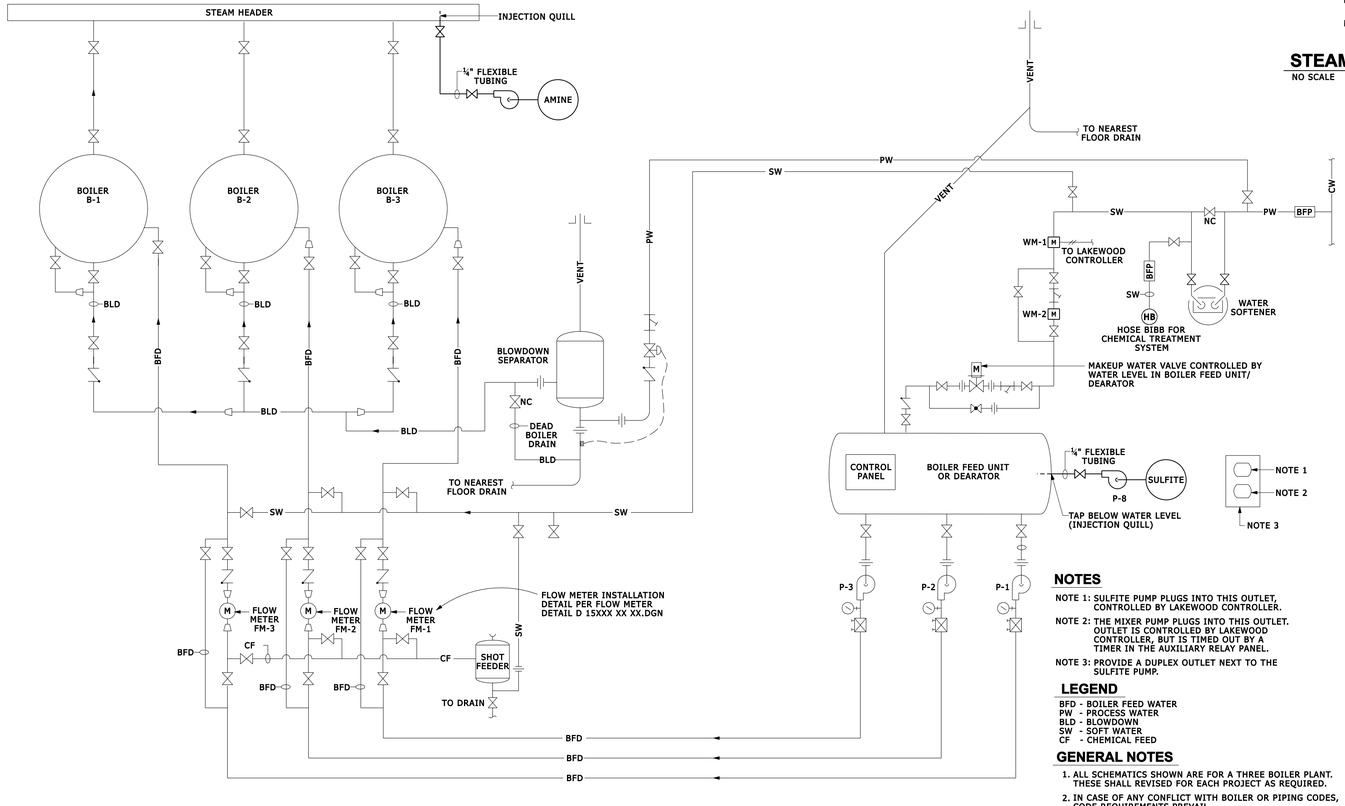

NOTES

NOTE 1: SULFITE PUMP PLUGS INTO THIS OUTLET, CONTROLLED BY LAKEWOOD CONTROLLER.

NOTE 2: THE MIXER PUMP PLUGS INTO THIS OUTLET. OUTLET IS CONTROLLED BY LAKEWOOD CONTROLLER, BUT IS TIMED OUT BY A TIMER IN THE AUXILIARY RELAY PANEL.

NOTE 3: PROVIDE A DUPLEX OUTLET NEXT TO THE SULFITE PUMP.

LEGEND

BFD - BOILER FEED WATER
PW - PROCESS WATER
BLD - BLOWDOWN
SW - SOFT WATER
CF - CHEMICAL FEED

GENERAL NOTES

1. ALL SCHEMATICS SHOWN ARE FOR A THREE BOILER PLANT. THESE SHALL REVISED FOR EACH PROJECT AS REQUIRED.
2. IN CASE OF ANY CONFLICT WITH BOILER OR PIPING CODES, CODE REQUIREMENTS PREVAIL.
3. SCHEMATIC SHOWS UNHEATED BOILER FEED UNIT. REVISE AS REQUIRED FOR PRESSURIZED/NON PRESSURIZED DEARATOR OR HEATED BOILER FEED UNIT.
4. ALL ELECTRICAL WORK SHALL BE ON ELECTRICAL SHEETS PER NEC.

STEAM BOILER WATER TREATMENT SCHEMATIC

NO SCALE

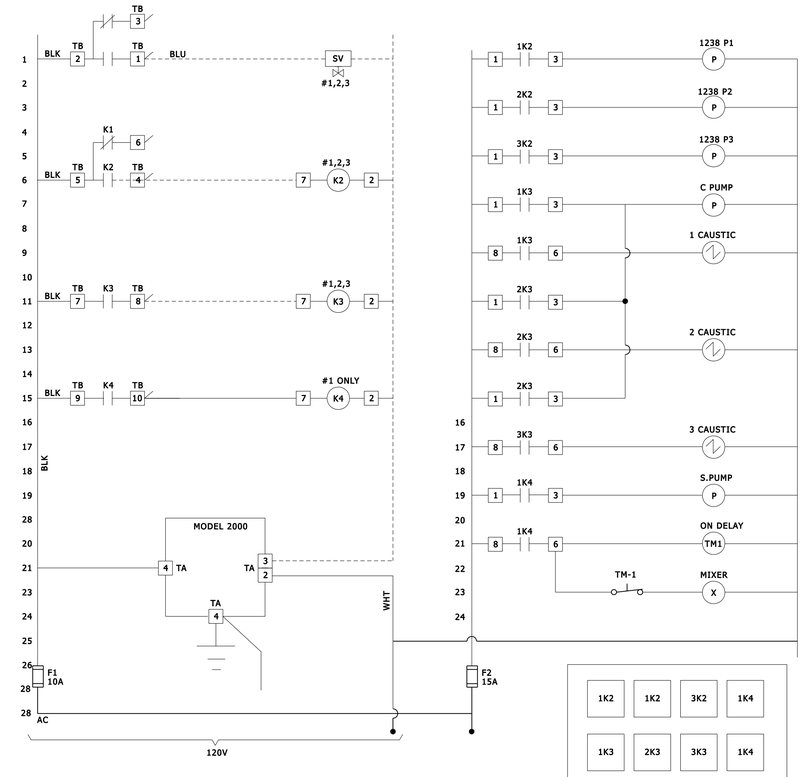

AUXILIARY RELAY PANEL WIRING SCHEMATIC

NO SCALE

THE UNIVERSITY OF MICHIGAN
PLANT EXTENSION
ARCHITECTURE, ENGINEERING & CONSTRUCTION
ARCHITECTURAL AND ENGINEERING SERVICES
326 EAST HOOVER STREET
ANN ARBOR, MI 48109-1002

U OF M DESIGN SUPERVISOR

APPROVED BY
Architectural Engineering Services
REPRESENTING

DRAWN BY | PROJECT LEAD
DESIGNED BY | REVIEWED BY

MARK	ISSUED FOR/REVISIONS	DATE

General Requirements of Chemical Systems for Steam Boilers

THE UNIVERSITY OF MICHIGAN
PLANT EXTENSION
ARCHITECTURE, ENGINEERING & CONSTRUCTION
326 EAST HOOVER STREET
ANN ARBOR, MI 48109-1002

U OF M PROJECT NO. | DRAWING FILE NO.

SHEET TITLE

Steam Boiler Chemical Treatment

SHEET NO.

SHEET NO. 1 OF 2 | SHEET FILE NO.

5/24/2006 9:36:47 AM CARLOSW Q:\AES\MECH\Mech Tech Teams\Ready for Approval\hydronics & steam\D 15188 001 072505.dgn

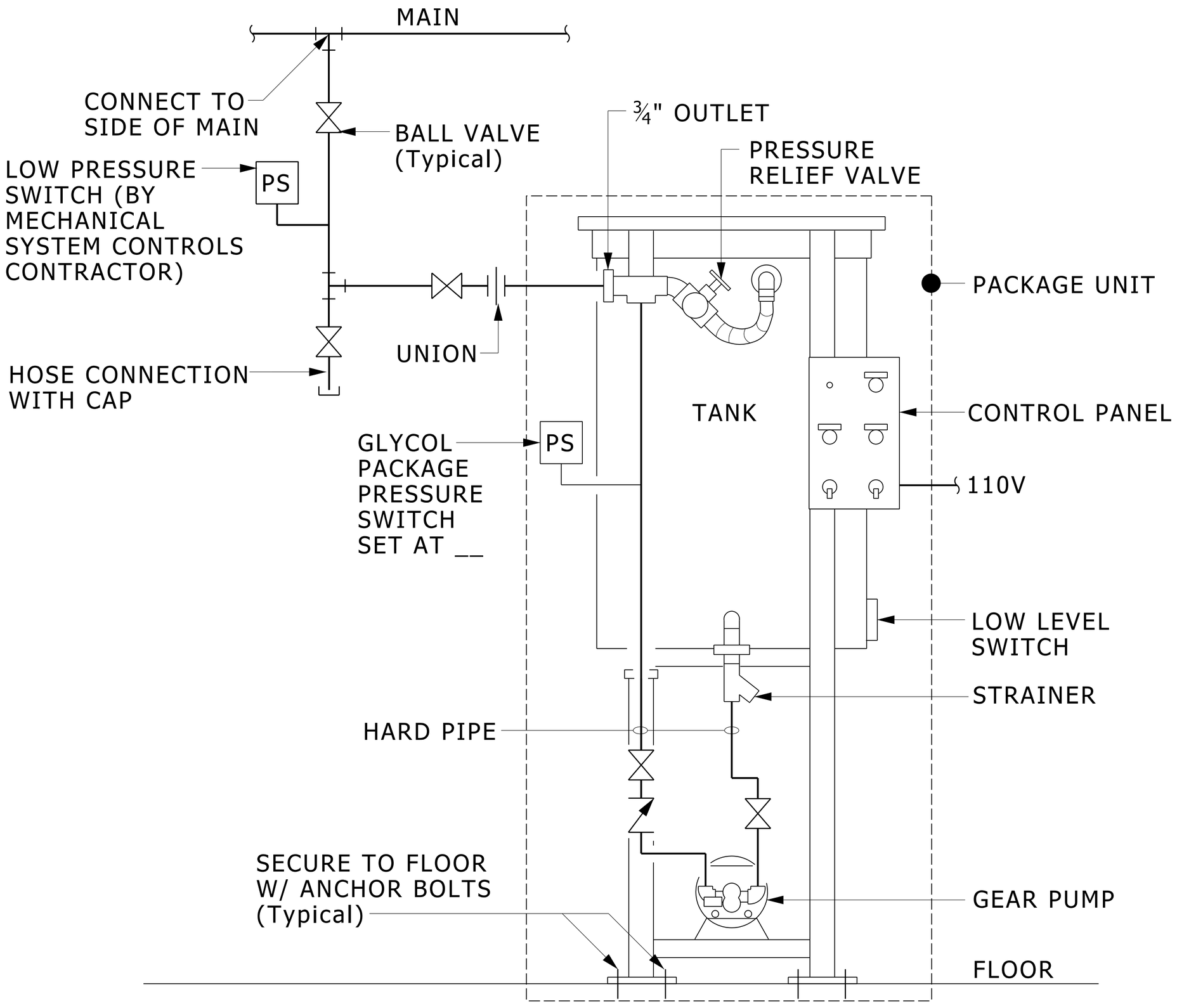

GLYCOL FEED SYSTEM DETAIL

NO SCALE

D 15189 02 03 12.dgn

DESIGNER NOTES:

1. INDICATE START/STOP PRESSURES FOR GLYCOL PACKAGE SWITCH.
2. LOW PRESSURE SWITCH TO ALARM THROUGH DDC AND SHUT DOWN PUMPS.

REFERENCED DETAILS/SCHEDULES:

ADDITIONAL INFORMATION:

MODULES: 1

UNIVERSITY OF MICHIGAN
ARCHITECTURE, ENGINEERING AND CONSTRUCTION

ARCHITECTURE & ENGINEERING
326 East Hoover, Mail Stop B
Ann Arbor, MI 48109-1002
Phone: 734-764-3414
Fax: 734-936-3334

Glycol Feed System Detail

DIVISION: 15
SECTION: 15189
FILE: D 15189 02 03 12.dgn
ISSUE DATE: 02/01/12

S:\Project Support\Details\Mech\15189 HVAC Water Treatment\D 15189 02 03 12.dgn
carlosw
3/14/2012 2:06:16 PM

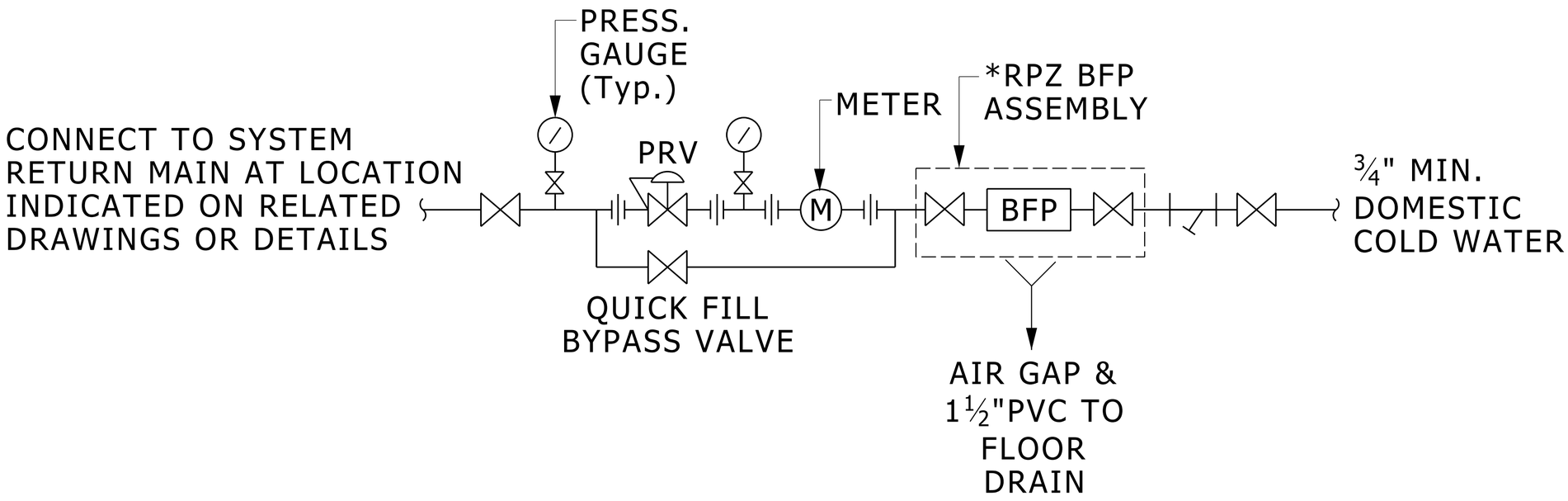

WATER METER:

BRONZE 0-50 GPM POSITIVE DISPLACEMENT WATER FLOW METER CARLTON MODEL 1000JLR.

*RPZ BFP ASSEMBLY

NOTE: ALL NEW PIPING COMPONENTS TO BE LINE SIZE TO MATCH EXISTING MAKEUP PIPING EXCEPT PRESSURE GAUGE VALVES TO BE ¼". ALL OTHER COMPONENTS PER UM STD. SPECS. PRESSURE GAUGES TO BE 0-100 PSIG.

CLOSED SYSTEM MAKEUP DETAIL

NO SCALE

D 15189 03 11 12.dgn

REFERENCED DETAILS/SCHEDULES:

ADDITIONAL INFORMATION:

MODULES: 1

UNIVERSITY OF MICHIGAN
ARCHITECTURE, ENGINEERING AND CONSTRUCTION

ARCHITECTURE & ENGINEERING
326 East Hoover, Mail Stop B
Ann Arbor, MI 48109-1002
Phone: 734-764-3414
Fax: 734-936-3334

Closed System Makeup Detail

DIVISION: 15
SECTION: 15189
FILE: D 15189 03 11 12.dgn
ISSUE DATE: 11/01/12

11/1/2012 1:35:24 PM S:\Project Support\Details\Mech\15189 HVAC Water Treatment\15189 Ready to post\D 15189 03 11 12.dgn carlosw

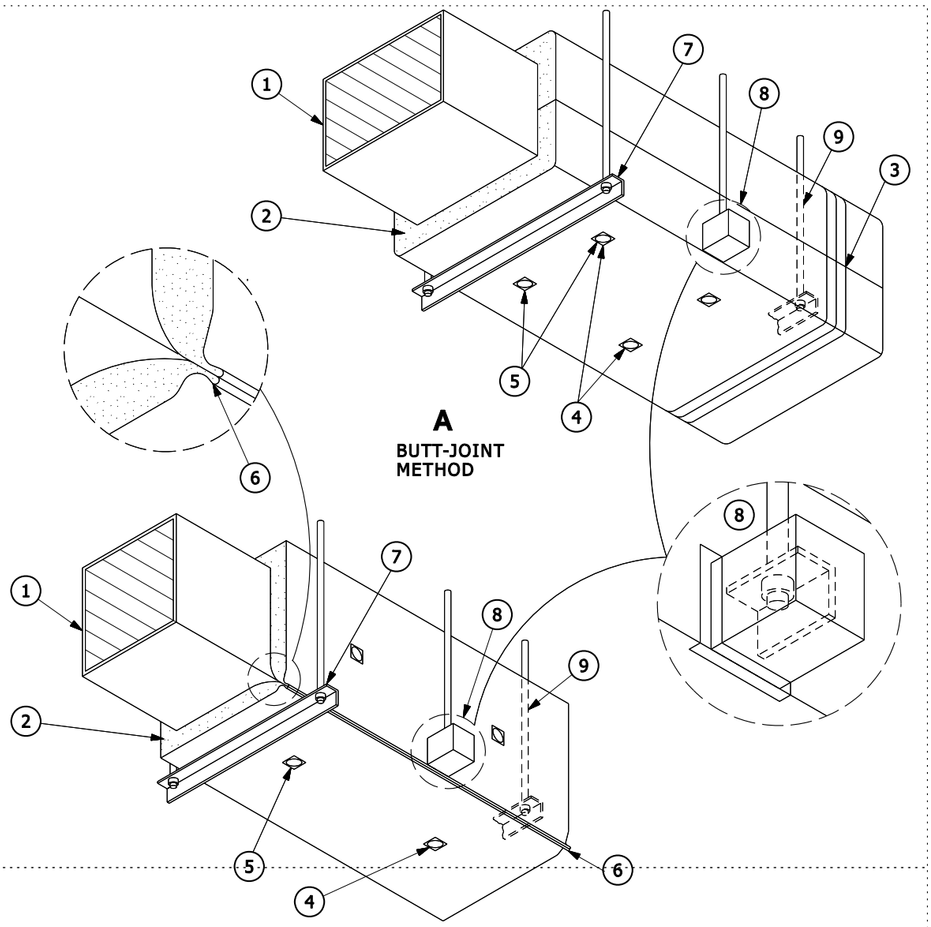

A
BUTT-JOINT METHOD

B
STAPLE-STITCHING METHOD

NOTES:

1. DUCT.
2. BLANKET INSULATION WITH FACTORY-APPLIED VAPOR-RETARDER JACKET, 1 ½"THICK, ¾ LB CU.FT. DENSITY
3. FACTORY LAP ALL SEALS (SEALED WITH ADHESIVE AND/OR STAPLES OR VAPOR-RETARDER TAPE).
4. MECHANICAL FASTENERS SUPPORTING INSULATION ON UNDERSIDE OF DUCTS OVER 24" WIDE (SPACED 3" MAXIMUM FROM THE BUTT JOINT).
5. VAPOR-RETARDER TAPE OVER TEARS AND PENETRATIONS OF THE VAPOR-RETARDER JACKET TO KEEP AIR TIGHT CONDITION.
6. ALTERNATE METHOD OF LAP SEAL - LONGITUDINAL JOINT LAPPED AND FOLDED, THEN STAPLED SECURELY IN PLACE.
7. HANGER ON EXTERIOR OF INSULATION. ENCAPSULATE EXPOSED END OF ANGLE. SEAL WITH ADHESIVE OR VAPOR-RETARDER TAPE.
8. HANGER EMBEDDED IN INSULATION. ENCAPSULATE EXPOSED END OF ANGLE. SEAL WITH ADHESIVE OR VAPOR-RETARDER TAPE.
9. COMPLETELY ENCAPSULATE HANGER ROD AND ANGLE. SEAL TOP PENETRATION. ENCAPSULATE AND SEAL STRAP HANGERS IN A SIMILAR MANNER.

BLANKET FIBERGLASS INSULATION DETAIL

NO SCALE

D 15250 001 12 03

REFERENCED DETAILS/SCHEDULES:
S XXXXX XXX D XXXXX XXX

ADDITIONAL INFORMATION:

MODULES: X

UNIVERSITY OF MICHIGAN
ARCHITECTURE, ENGINEERING AND CONSTRUCTION
ARCHITECTURE & ENGINEERING
326 East Hoover, Mail Stop B
Ann Arbor, MI 48109-1002
Phone: 734-764-3414
Fax: 734-936-3334

Blanket Fiberglass Insulation Detail

DIVISION: 15
SECTION: 15250
FILE: D 15250 001 12 03.dgn
ISSUE DATE: 12/22/03

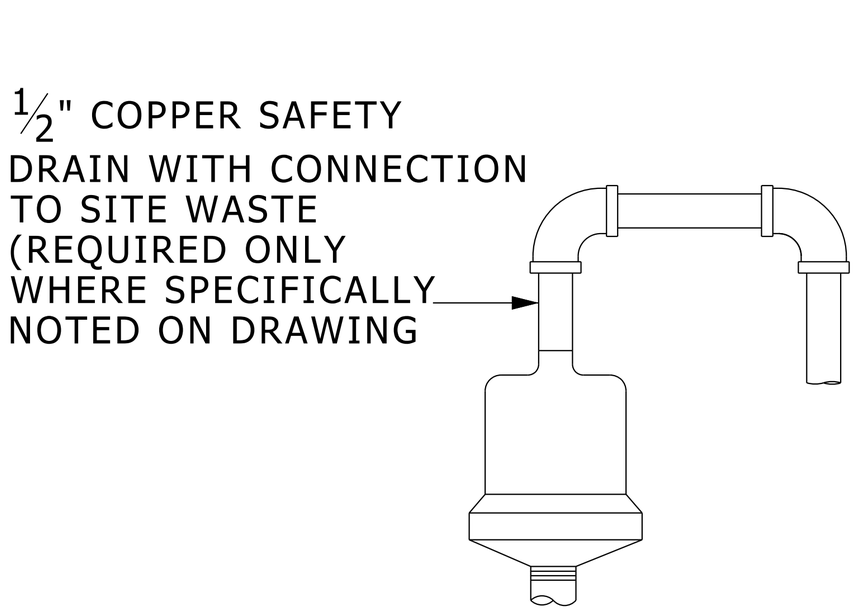

FOR CONTINUOUS AIR VENTING

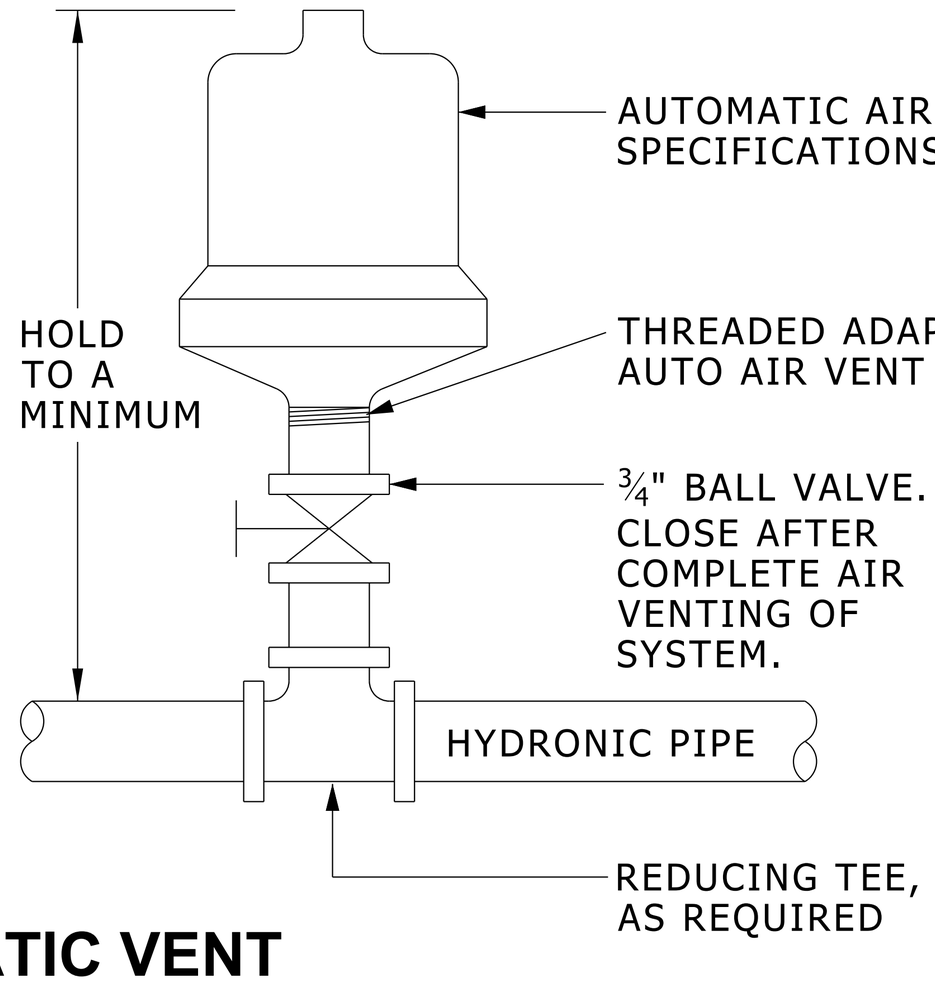

AUTOMATIC VENT

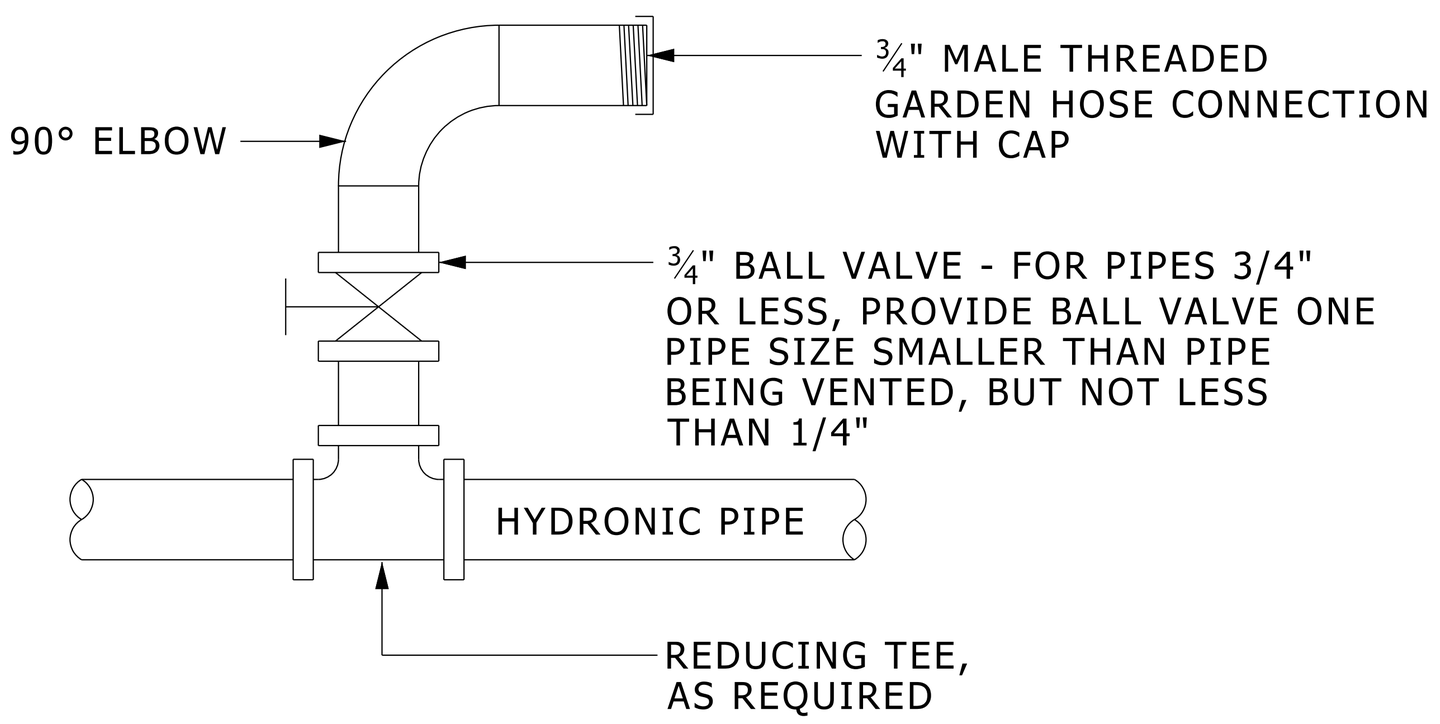

MANNUAL VENT

NOTES:

1. AUTOMATIC AIR VENTS ARE REQUIRED AT EACH HIGH POINT IN HYDRONIC PIPING LOCATED TO COMPLETELY VENT AIR FROM WATER SYSTEMS.

2. FOR PIPE SIZES 2-1/2" AND LARGER, PROVIDE BELL & GOSSETT MODEL 78 AIR VENT, OR ARMSTRONG NO.75, RATED FOR 150 PSI.

3. FOR PIPE SIZES 2" AND LESS, PROVIDE BELL & GOSSETT MODEL 87 AIR VENT, OR ARMSTRONG NO.75, RATED FOR 150 PSI.

4. WHEN AUTOMATIC AIR VENT INSTALLATION IS NOT POSSIBLE, OR WHEN MANNUAL VENTS ARE INDICATED, PROVIDE A BALL VALVE AND HOSE THREAD CONNECTION.

WATER SYSTEM AIR VENT DETAILS

NO SCALE

D 15515 002 06 04.dgn

REFERENCED DETAILS/SCHEDULES:
xxxx S_XXXXX_XXX__

ADDITIONAL INFORMATION:

MODULES: X__

UNIVERSITY OF MICHIGAN
ARCHITECTURE, ENGINEERING AND CONSTRUCTION

ARCHITECTURE & ENGINEERING
326 East Hoover, Mail Stop B
Ann Arbor, MI 48109-1002
Phone: 734-764-3414
Fax: 734-936-3334

Automatic_Water_System_Air_Vent_Detail__

DIVISION: 15_____
SECTION: 15515 ----------
FILE: D_15515_002_09_15.dgn_
ISSUE DATE: 09/16/15

\\aec-users.m.storage.umich.edu\aec-users\AEC-HomeFolders\pschmand\Desktop\D 15515 002 09 15.dwg
pschmand
10/13/2015 9:29:16 AM

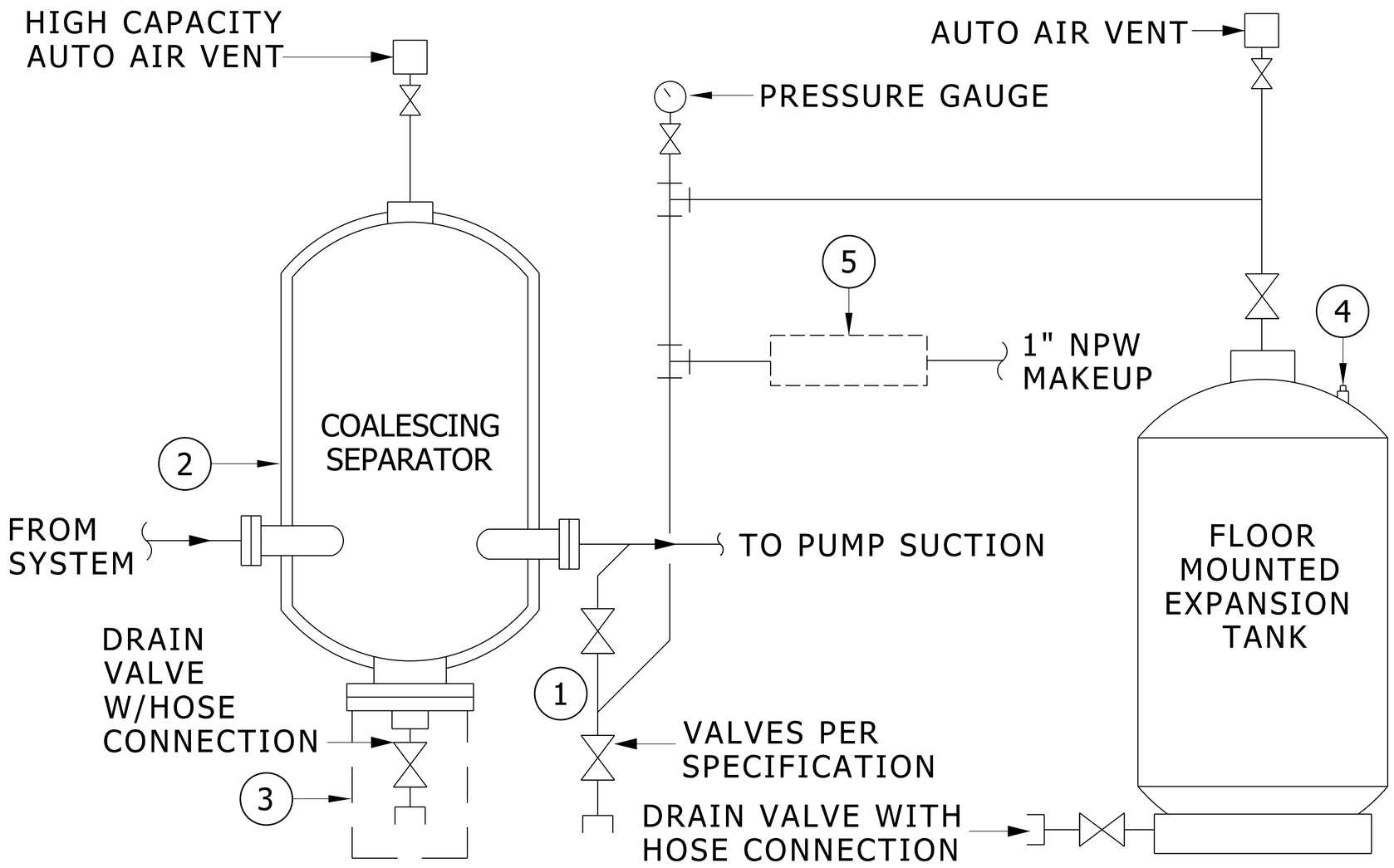

KEY NOTES

1. CONNECT TO SIDE OF MAIN. PROVIDE ANTI-THERMO SIPHON LOOP. ROUTE PIPING AS SHOWN.
2. INSULATE PER SPECIFICATIONS.
3. PROVIDE ROOM FOR SCREEN REMOVAL.
4. SET PRECHARGE TANK PRESSURE TO ___ PSIG.
5. MAKE-UP ASSEMBLY, SEE CLOSED SYSTEM MAKE-UP DETAIL. SET PRV TO__PSIG.
6. ESTIMATED SYSTEM VOLUME IS ___GALLONS.
7. ROUTE DISCHARGE OF AUTOMATIC AIR VENTS TO FLOOR DRAINS.

COALESCING SEPARATOR AND FLOOR MOUNTED EXPANSION TANK DETAIL

NO SCALE

D 15515 011 11 12.dgn

S:\Project Support\Details\Mech\15515 Hydronic Piping Systems\D 15515 011 11 12.dgn
carlosw
11/1/2012 1:30:17 PM

REFERENCED DETAILS/SCHEDULES:
XXXX S 15515 001 05 04

ADDITIONAL INFORMATION:

MODULES: X

THE UNIVERSITY OF MICHIGAN
PLANT EXTENSION
ARCHITECTURE, ENGINEERING & CONSTRUCTION
ARCHITECTURAL AND
ENGINEERING SERVICES
326 EAST HOOVER STREET
ANN ARBOR, MI 48109-1002

Coalescing Separator and Flr. Mtd. Expans. Tk. Detail

DIVISION: 15
SECTION: 15515
FILE: D 15515 011 11 12.dgn
ISSUE DATE: 11/01/12

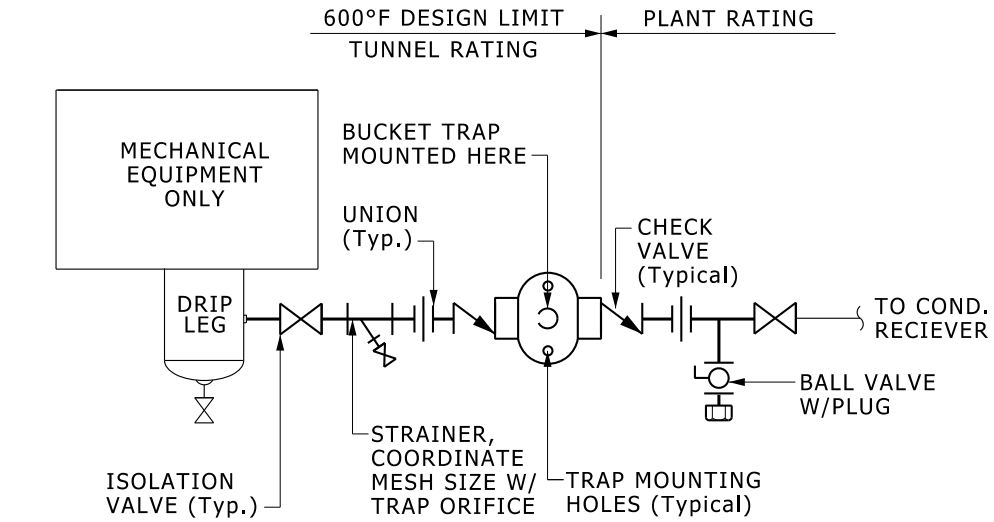

FRONT VIEW

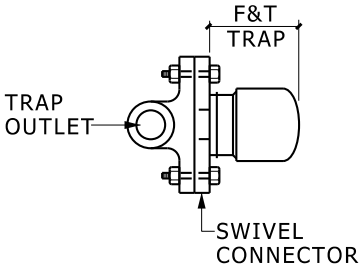

SIDE VIEW

NOTE

1. TRAP TO BE USED SPECIFICALLY ON EQUIPMENT, NOT TO BE USED ON DRIP LEGS FROM STEAM MAINS.

F&T STEAM TRAP ASSEMBLY DETAIL

NO SCALE

D 15525 01 11 09.dgn

REFERENCED DETAILS/SCHEDULES:

ADDITIONAL INFORMATION:

MODULES: 1

UNIVERSITY OF MICHIGAN
ARCHITECTURE, ENGINEERING AND CONSTRUCTION

ARCHITECTURE & ENGINEERING
326 East Hoover, Mail Stop B
Ann Arbor, MI 48109-1002
Phone: 734-764-3414
Fax: 734-936-3334

Float and Thermostatic Trap Assembly Detail

DIVISION: 15
SECTION: 15525
FILE: D 15525 01 11 09.dgn
ISSUE DATE: 09/17/07

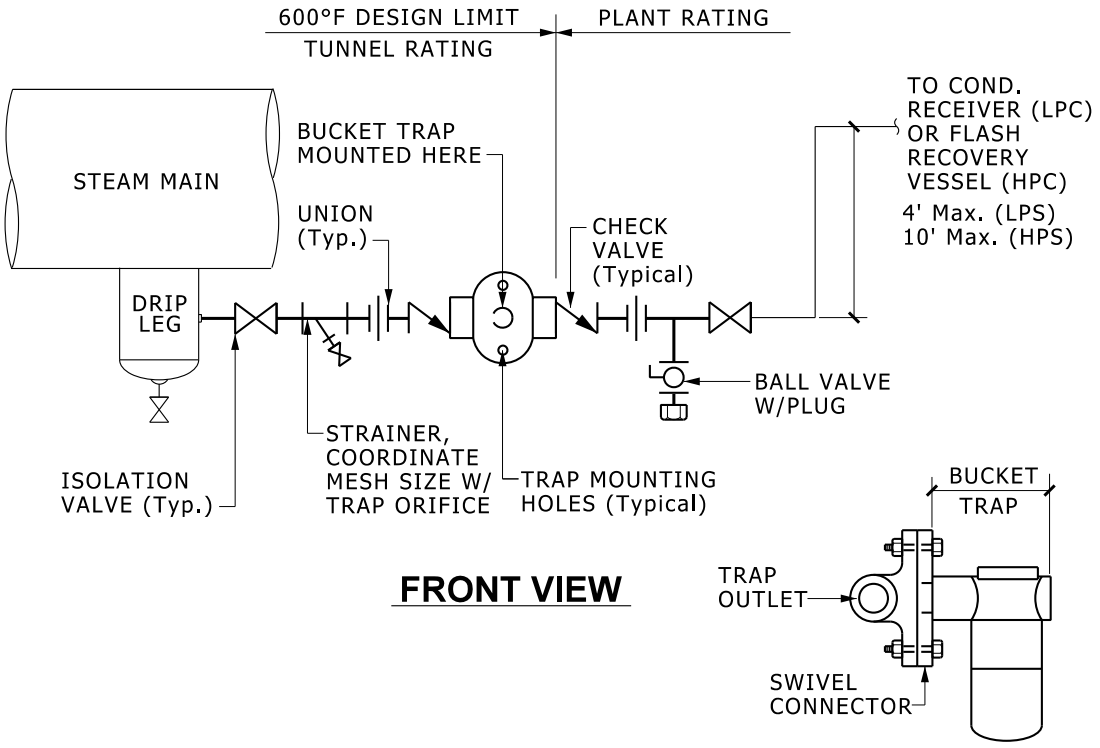

BUCKET STEAM TRAP ASSEMBLY DETAIL

NO SCALE

D 15525 05 11 09.dgn

REFERENCED DETAILS/SCHEDULES:

ADDITIONAL INFORMATION:

MODULES: 1

UNIVERSITY OF MICHIGAN
ARCHITECTURE, ENGINEERING AND CONSTRUCTION

ARCHITECTURE & ENGINEERING
326 East Hoover, Mail Stop B
Ann Arbor, MI 48109-1002
Phone: 734-764-3414
Fax: 734-936-3334

Bucket Steam Trap Assembly Detail

DIVISION: 15
SECTION: 15525
FILE: D 15525 05 11 09.dgn
ISSUE DATE: 09/17/07

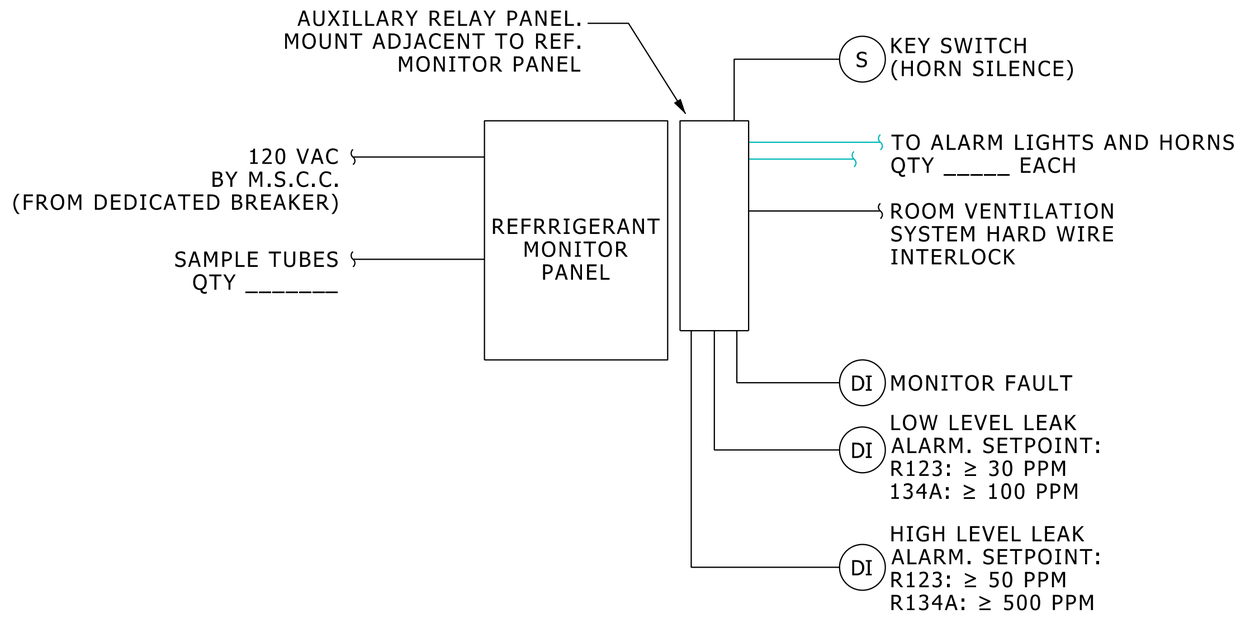

REFRIGERANT MONITOR CONTROL DIAGRAM

NO SCALE D 15635 001 0815

SEQUENCE OF OPERATION:

A. DETECTION OF LOW LEVEL REFRIGERANT LEAK: ALARM LIGHTS INSIDE AND OUTSIDE THE MACHINE ROOM (BUT NOT THE HORNS) SHALL ACTIVATE AND A "LOW" REFRIGERANT LEAK ALARM SHALL BE GENERATED AT THE BAS.

B. DETECTION OF HIGH LEVEL REFRIGERANT LEAK: ALARM LIGHTS AND HORNS INSIDE AND OUTSIDE THE MACHINE ROOM SHALL ACTIVATE, THE MACHINE ROOM VENTILATION SYSTEM SHALL BE PLACED INTO EMERGENCY EXHAUST/VENTILATION MODE, AND A 'HIGH" REFRIGERANT LEAK ALARM SHALL BE GENERATED AT THE BAS.

C. DETECTION OF A REFRIGERANT MONITOR FAULT CONDITION OR LOSS OF POWER TO MONITOR PANEL: A COMMON ALARM SHALL BE GENERATED AT BAS INDICATING A FAULT OR LOSS OF POWER.

D. IT SHALL BE POSSIBLE TO SILENCE ALL HORNS DURING AN ALARM, WITH A MOMENTARY 2-POSITION KEYED SWITCH LOCATED OUTSIDE THE MACHINE ROOM. HOLDING THE KEYED SWITCH MOMENTARILY IN THE "SILENCE" POSITION AND THEN RELEASING IT SHALL SILENCE ALL HORNS UNTIL THE CONDITION THAT CAUSED THE ALARM, AS DETECTED BY THE REFRIGERANT MONITOR, HAS ABATED. ONCE THE CONDITION THAT CAUSED THE ALARM CLEARS AND THE MONITOR PANEL IS RESET, THE HORN SILENCE FUNCTION SHALL AUTOMATICALLY RESET.

E. ALARMS SHALL BE LATCHED, AND SHALL BE RESETTABLE VIA A SWITCH INSIDE THE REFRIGERANT MONITOR PANEL ONCE THE CONDITION THAT CAUSED THE ALARM HAS ABATED.

GENERAL NOTES:

1. INSTALL REFRIGERANT MONITOR, SENSING TUBES, MULTIPOINT SEQUENCERS, REMOTE RELAY MODULES, ETC. PER REFRIGERANT MONITOR MANUFACTURER'S RECOMMENDATIONS.

2. PROVIDE MOMENTARY KEYED SWITCH, ADDITIONAL RELAYS, ETC. AS REQUIRED TO MEET THE SEQUENCE OF OPERATION. ROUTE ALL DDC POINTS THROUGH AND LOCATE ALL RELAYS AND RELATED COMPONENTS IN AN AUXILIARY PANEL MOUNTED ADJACENT TO THE REFRIGERANT MONITOR.

3. MOUNT THE MONITOR PANEL 5'-6" AFF, INSIDE THE MACHINE ROOM AT THE LOCATION INDICATED ON THE PLANS. IF THE LOCATION IS NOT INDICATED, MOUNT INSIDE AND NEAR THE MAIN ENTRY DOOR TO THE ROOM.

4. LOCATE ALARM LIGHTS, HORNS, AND SAMPLE TUBE TIPS AT THE LOCATIONS INDICATED ON THE PLANS. MOUNT SAMPLE TIPS AT LOCATIONS THAT ALLOW SENSING A LEAK, DO NOT INSTALL IN DEAD-AIR LOCATIONS. LIGHTS, SIGNS AND HORNS SHALL BE EASILY VISIBLE FROM THE FLOOR.

5. ALARM LIGHTS AT THE EXTERIOR SIDE OF EACH MACHINE ROOM ENTRANCE DOOR SHALL BE FLASHING BLUE LED TYPE, MINIMUM 4" DIAMETER DOME.

6. ALARM LIGHTS INSIDE MACHINE ROOMS SHALL BE STROBE TYPE WITH BLUE LENS, APPROXIMATELY 5" HIGH LENS.

7. PROVIDE HORNS ADJACENT TO ALL WARNING LIGHT LOCATIONS. THE HORN VOLUME (MEASURED AT 10 FEET) SHALL BE ADJUSTABLE BETWEEN 85 TO 100 DB.

8. ADJUST HORN OUTPUT TO BE DISTINCTLY AUDIBLE ABOVE NORMAL BACKGROUND NOISE BUT NOT BE EXCESSIVELY LOUD.

9. PROVIDE MINIMUM 3/16" I.D. RIGID COPPER OR STAINLESS STEEL TUBING WITH COMPRESSION JOINTS FOR SENSING AND EXHAUST TUBES. PROVIDE STAINLESS STEEL TUBING FOR AMMONIA REFRIGERANT DETECTION. INSTALL END-OF-LINE FILTERS SUPPLIED BY THE REFRIGERANT MONITOR MANUFACTURER.

10. PROVIDE PHENOLIC PLASTIC SIGNS, MINIMUM 1/2" HIGH WHITE ENGRAVED LETTERS ON RED BACKGROUND, AT EACH LIGHT/HORN LOCATION, AND AT THE REFRIGERANT MONITOR PANEL.

    NOMENCLATURE SHALL BE AS FOLLOWS:

    LIGHT AND/OR HORN INDICATE REFRIGERANT DETECTION ALARM.
    UNAUTHORIZED PERSONNEL STAY OUT OF MACHINE ROOM
    REPORT ALARM TO PLANT OPERATIONS CALL CENTER (734)-647-2059

    FOR U-M HOSPITAL PROJECTS:

    LIGHT AND/OR HORN INDICATE REFRIGERANT DETECTION ALARM.
    UNAUTHORIZED PERSONNEL STAY OUT OF MACHINE ROOM
    REPORT ALARM TO SYSTEMS MONITORING (734)-936-7521

11. MECHANICALLY FASTEN SIGNS TO WALLS OUTSIDE OF MACHINE ROOM, HANG FROM CHAINS INSIDE MACHINE ROOM. OBTAIN IN-FIELD APPROVAL FROM OWNER'S REPRESENTATIVE OF THE EXACT MOUNTING LOCATION OF ALL SIGNAGE.

12. MOUNT THE KEYED SWITCH TO SILENCE THE HORNS OUTSIDE AND ADJACENT TO THE MAIN ENTRY DOOR TO THE MACHINE ROOM. LABEL SWITCH "REFRIGERANT ALARM SILENCE SWITCH". THE KEYED SWITCH (SIMILAR TO BEST MODEL 1W7) SHALL BE CORED FOR A U-M MACHINE ROOM BEST LOCK "BA" KEY - FOR HOSPITAL PROJECTS, BEST LOCK "1W5" KEY. LABEL TO BE ENGRAVED PLASTIC IN COMPLIANCE WITH 230900.

13. ALL DEVICES EXTERIOR TO THE MACHINE ROOM SHALL BE MOUNTED IN RECESSED ELECTRICAL BOXES (BOX FRONT EDGE FLUSH WITH WALL).

REVISION HISTORY:
DATE EXPLANATION
08/04/15 Control Diagra Created - PS

DESIGNER NOTES:

1. FILL IN QUANTITY OF LIGHTS HORNS AND SAMPLE TUBES.
2. REVISE REFRIGERANT TYPE AND ALARM LEVEL, IF REQUIRED.
3. INDICATE THE LOCATION OF THE REFRIGERANT MONITOR PANEL ROOM NEAR DOOR), LIGHTS HORNS, KEYED SWITCH, AND THE SA THE MACHINE ROOM PLANS.
4. INDICATE THE REFRIGERANT MONITOR INTERLOCK ON THE CONTR MACHINE ROOM VENTILATION SYSTEM.
5. ASSURE THE ELECTRICAL DRAWINGS INDICATE A DEDICATED BRE REFRIGERANT MONITOR PANEL.

REFERENCED DETAILS/SCHEDULES:
XXXX_____XXXX_____
XXXX_____XXXX_____
XXXX_____XXXX_____
ADDITIONAL INFORMATION:
XXXX_____
XXXX_____
XXXX_____
MODULES: X

UNIVERSITY OF MICHIGAN
ARCHITECTURE, ENGINEERING AND CONSTRUCTION
ARCHITECTURE & ENGINEERING
326 East Hoover, Mail Stop B
Ann Arbor, MI 48109-1002
Phone: 734-764-3414
Fax: 734-936-3334

Refrigerant_Monitoring_Control_Diagram__

DIVISION: 23
SECTION: 230930
FILE: D_15635_001_08_15.dgn
ISSUE DATE: 08/04/15

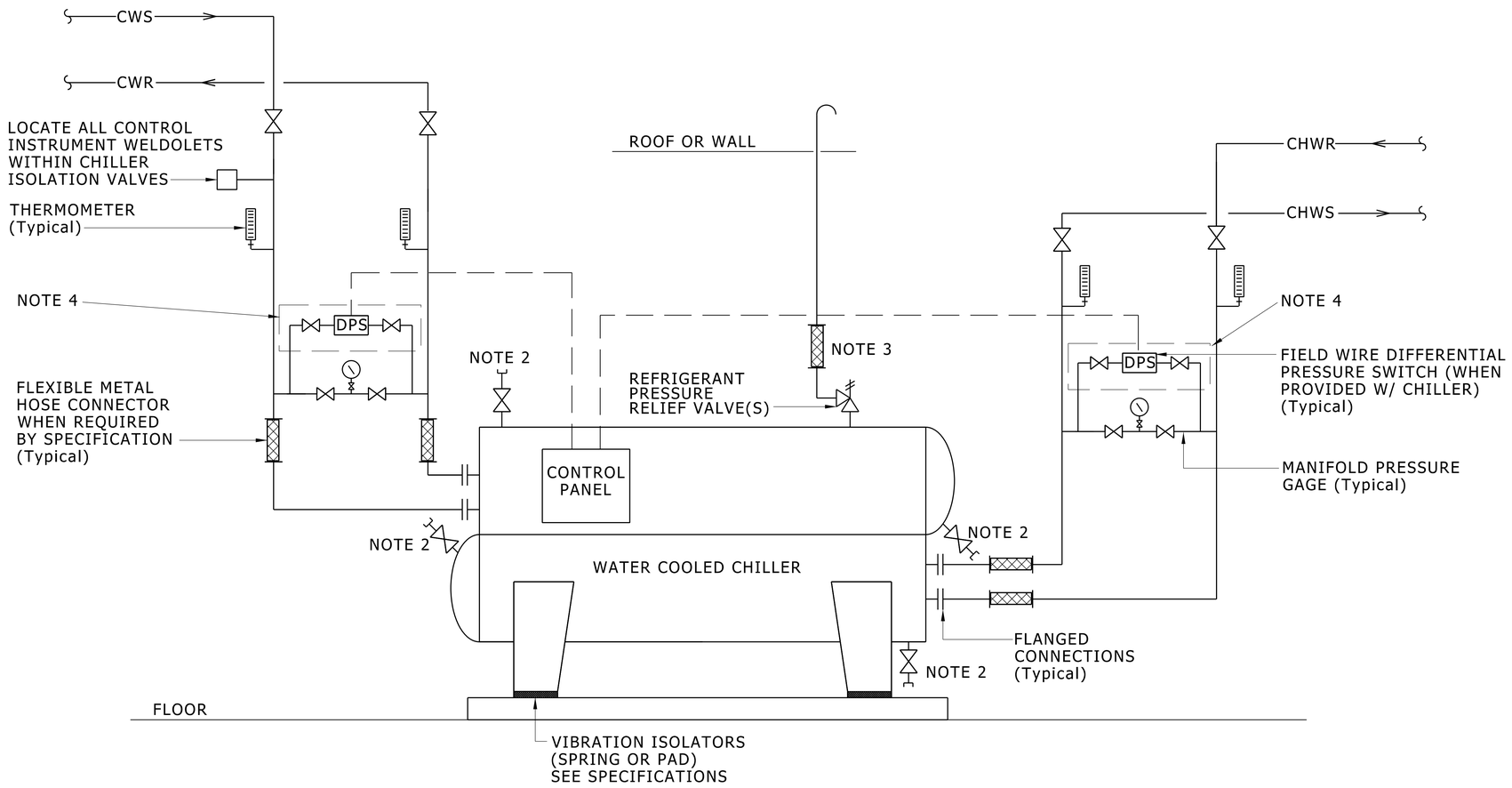

NOTES:

1. PROVIDE OFFSET PIPING, AND SPOOL PIECES FOR ALL PIPING ROUTED IN THE CHILLER TUBE PULL ZONES, TO ALLOW CHILLER HEAD REMOVAL WITH A MINIMUM OF PIPING REMOVAL. ALL PIPING ROUTED IN THE TUBE PULL ZONES SHALL BE REMOVABLE BY UNBOLTING FLANGES.
2. PROVIDE MANUAL DRAIN AND VENT VALVES FOR EVERY TAP CONNECTION PROVIDED BY MANUFACTURER, FULL SIZE OF TAP IN CONDENSER WATER & CHILLED WATER.
3. PROVIDE RELIEF VENT PIPING PER MANUFACTURER INSTRUCTIONS. ROUTE VENT PIPING TO OUTSIDE ATMOSPHERE PER DRAWINGS.
4. DPS AND RELATED PIPING NOT REQUIRED IF FACTORY INSTALLED FLOW SENSOR IS PROVIDED.
5. SUPPORT PIPING INDEPENDENT OF CHILLER CONNECTIONS.

ELECTRIC DRIVE WATER COOLED CHILLER PIPING SCHEMATIC

NO SCALE

D_15684_001_03_16.dgn_

DESIGNER NOTE:
PROVIDE FLANGED PIPING ABOVE CHILLER TO ALLOW CHILLER COMPRESSOR/MOTOR REMOVAL.

REFERENCED DETAILS/SCHEDULES:

ADDITIONAL INFORMATION:

MODULES: 2__

UNIVERSITY OF MICHIGAN
ARCHITECTURE, ENGINEERING AND CONSTRUCTION

ARCHITECTURE & ENGINEERING
326 East Hoover, Mail Stop B
Ann Arbor, MI 48109-1002
Phone: 734-764-3414
Fax: 734-936-3334

Electric Drive Water Cooled Water Chiller Piping Schematic

DIVISION: 15_____
SECTION: 15684 _____
FILE: D_15684_001_03_16.dgn_
ISSUE DATE: 03/15/16

3/15/2016 8:18:48 AM pschmand C:\Users\pschmand\Downloads\D 15684 001 03 16.dwg

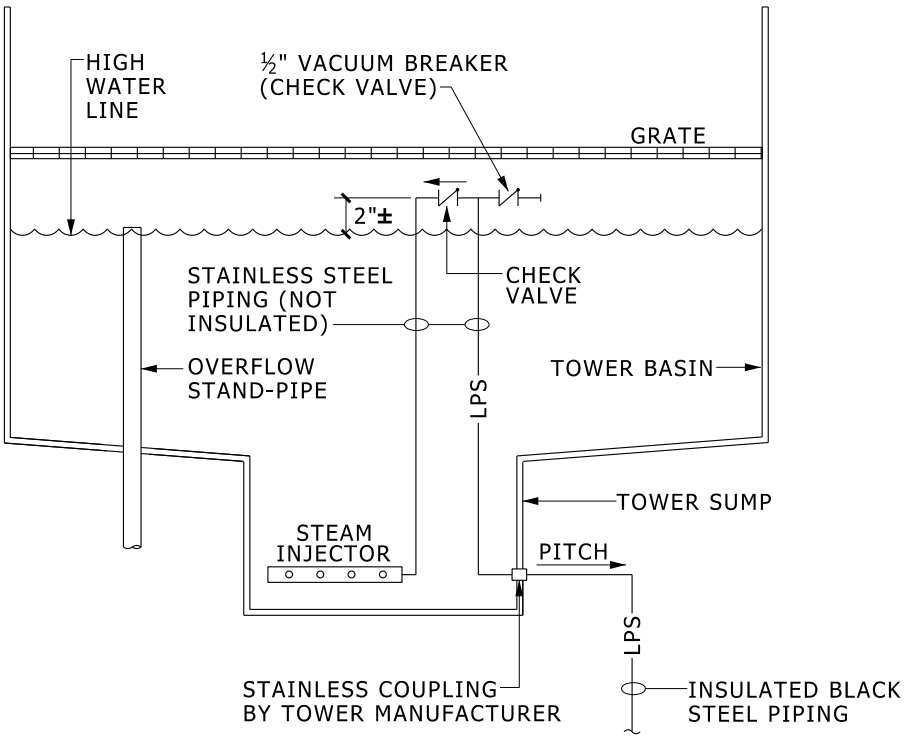

COOLING TOWER LPS PIPING DETAIL

NO SCALE

D 15710 04 03 07.dgn

REFERENCED DETAILS/SCHEDULES:

ADDITIONAL INFORMATION:

MODULES: 1

UNIVERSITY OF MICHIGAN
ARCHITECTURE, ENGINEERING AND CONSTRUCTION

ARCHITECTURE & ENGINEERING
326 East Hoover, Mail Stop B
Ann Arbor, MI 48109-1002
Phone: 734-764-3414
Fax: 734-936-3334

Cooling Tower LPS piping Detail

DIVISION: 15
SECTION: 15710
FILE: D 15710 04 04 08.dgn
ISSUE DATE: 04/10/08

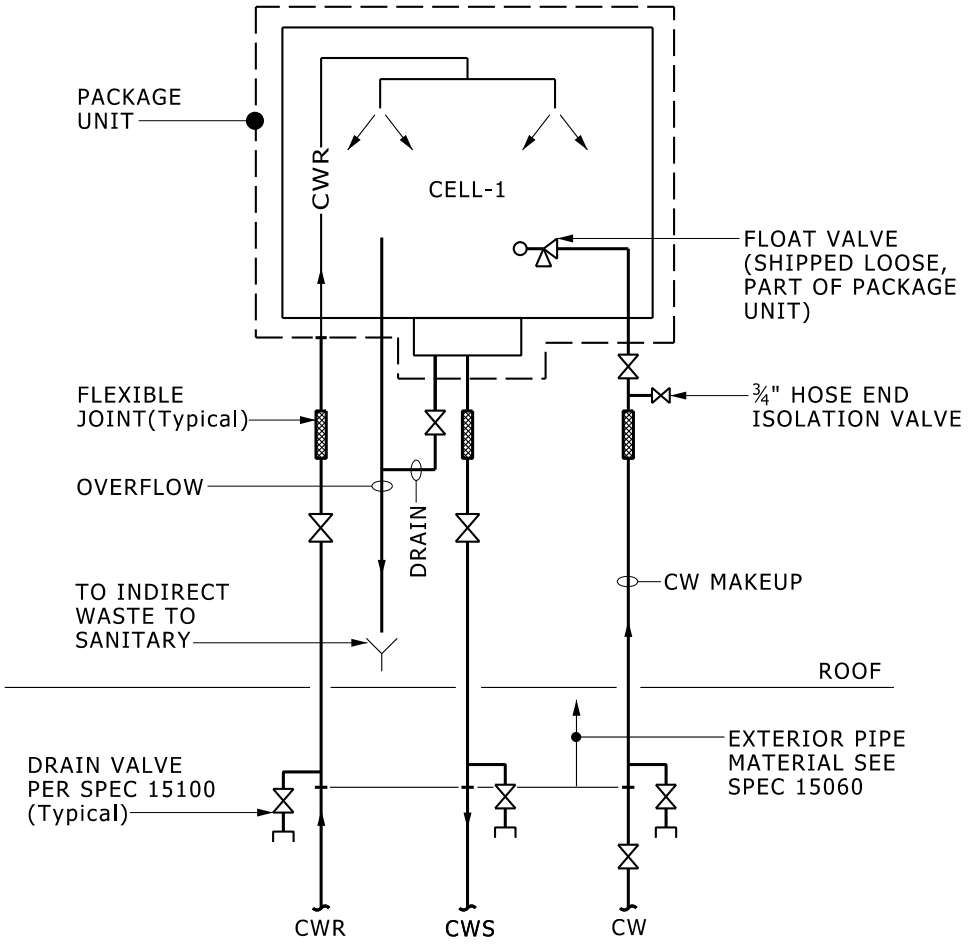

SEASONAL TOWER PIPING DETAIL

NO SCALE D 15710 06 11 07.dgn

DESIGNER NOTES:

1. CONSIDER USE OF SS/NON-FEROUS PIPING ABOVE ROOF FOR CWS/CWR.

REFERENCED DETAILS/SCHEDULES:
xxxx S XXXXX XXX

ADDITIONAL INFORMATION:

MODULES: X

UNIVERSITY OF MICHIGAN
ARCHITECTURE, ENGINEERING AND CONSTRUCTION

ARCHITECTURE & ENGINEERING
326 East Hoover, Mail Stop B
Ann Arbor, MI 48109-1002
Phone: 734-764-3414
Fax: 734-936-3334

Seasonal Tower Piping Detail

DIVISION: 15
SECTION: 15710
FILE: D 15710 06 11 07.dgn
ISSUE DATE: 11/08/07

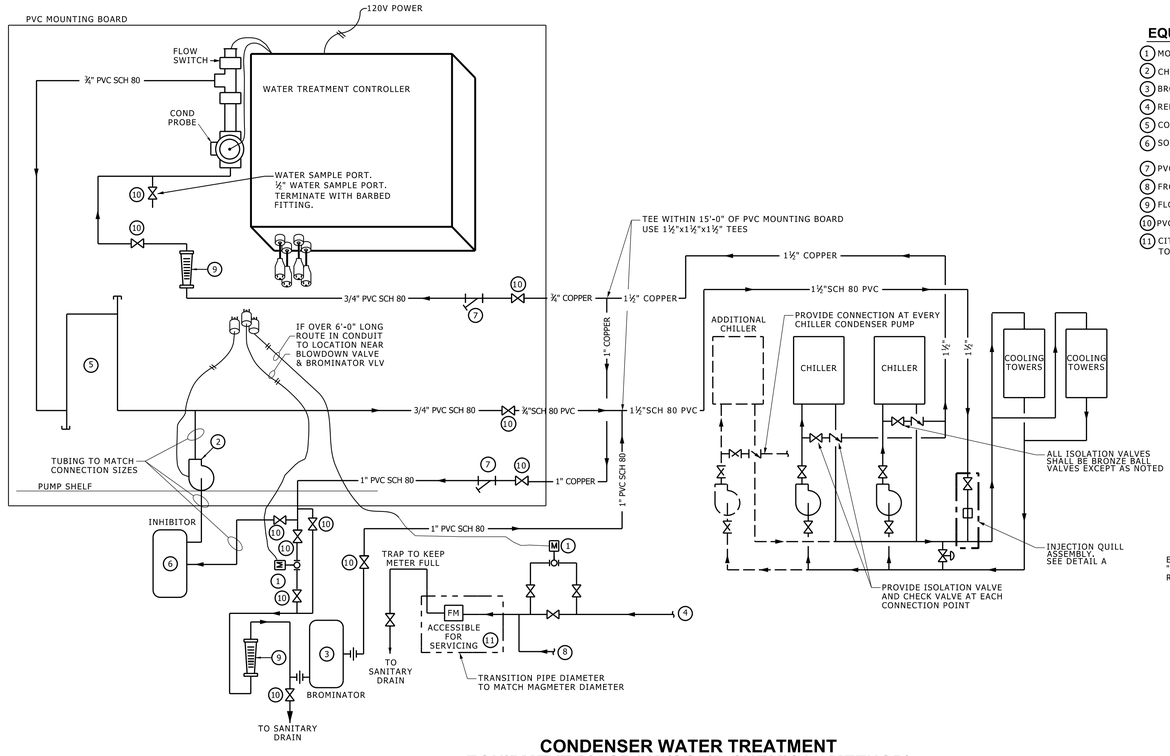

CONDENSER WATER TREATMENT EQUIPMENT DIAGRAM (SOLID CHEMICAL METHOD)

NO SCALE

DESIGNER NOTES (DELETE FROM CONTRACT DRAWINGS)

A. FOR A CONDENSER WATER SYSTEM WITH MULTIPLE CHILLERS AND CONDENSER WATER PUMPS, EACH SUPPLY PIPE BETWEEN THE PUMPS AND THE CHILLERS REQUIRES A TAP WITH A BALL VALVE AND CHECK VALVE.

B. THE COOLING TOWER DRAIN AND OVERFLOW DRAIN SHOULD BE CONNECTED BEFORE THE BLOWDOWN METER.

C. IF THE CONDENSER WATER SYSTEM INCLUDES A CENTRIFUGAL OR COALESCING SEPARATOR, THE BLOWDOWN CONNECTION SHOULD BE FROM THE SEPARATOR DRAIN TO PROVIDE PERIODIC SOLIDS BLOWDOWN.

D. PROVIDE LOCKABLE 120V SWITCH LOCATED AT/NEAR CITY WATER MAG METERS.

E. PROVIDE 110V DEDICATED CIRCUIT FOR CHEMICAL PANEL AND CITY BLOWDOWN MAG METER.

F. CONTROL DRAWINGS SHOWN SHOULD BE INCLUDED WITH CONTROL DRAWING SHEETS.

G. REFER TO SCHEDULE BELOW FOR REQUIRED BLOWDOWN PIPE SIZES. INDICATE PIPE SIZES ON PROJECT DRAWINGS.

SCHEDULE

SYSTEM TONS	PIPE SIZE
<500	¾"
1000	1"
1500	1¼"
2000	1½"
>2000	2"

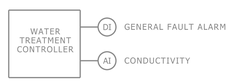

SEQUENCE

- DDC MONITORS GENERAL FAULT ALARM AND WATER CONDUCTIVITY.

MECHANICAL REFERENCE NOTES:

EQUIPMENT NOTES

1. MOTOR OPERATED BALL VALVE
2. CHEMICAL FEED PUMP.
3. BROMINE FEEDER TANK.
4. REFER TO OTHER DRAWINGS FOR TOWER BLOW DOWN CONNNECTION POINT.
5. CORROSION COUPON RACK
6. SOLID CORROSION INHIBITOR DISSOLVER
7. PVC CLEAR PLASTIC STRAINER
8. FROM COOLING TOWER DRAIN AND BASIN OVERFLOW.
9. FLOW INDICATOR
10. PVC BALL VALVE
11. CITY OF ANN ARBOR BLOWDOWN MAGMETER. INSTALL NO HIGHER THAN 48" AFF IN AN INVERTED SECTION TO MAINTAIN "PIPE FULL" AT ALL TIMES. COORDINATE LOCATION WITH CITY OF ANN ARBOR.

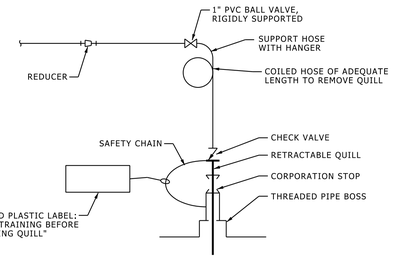

DETAIL A
RETRACTABLE INJECTION QUILL ASSEMBLY

NO SCALE

REFERENCED DETAILS/SCHEDULES:

ADDITIONAL INFORMATION:

MODULES: 6

REVISION HISTORY:
DATE EXPLANATION

THE UNIVERSITY OF MICHIGAN
PLANT EXTENSION
ARCHITECTURE, ENGINEERING & CONSTRUCTION
ARCHITECTURAL AND ENGINEERING SERVICES
326 EAST HOOVER STREET
ANN ARBOR, MI 48109-1002

D 15710 2 26 13.dgn

Condenser Water Treatment Equipment Diagram (Bromine Method)

DIVISION: 15
SECTION: 15710
FILE: D_15710_5_28_13.dgn
ISSUE DATE: 05/28/13

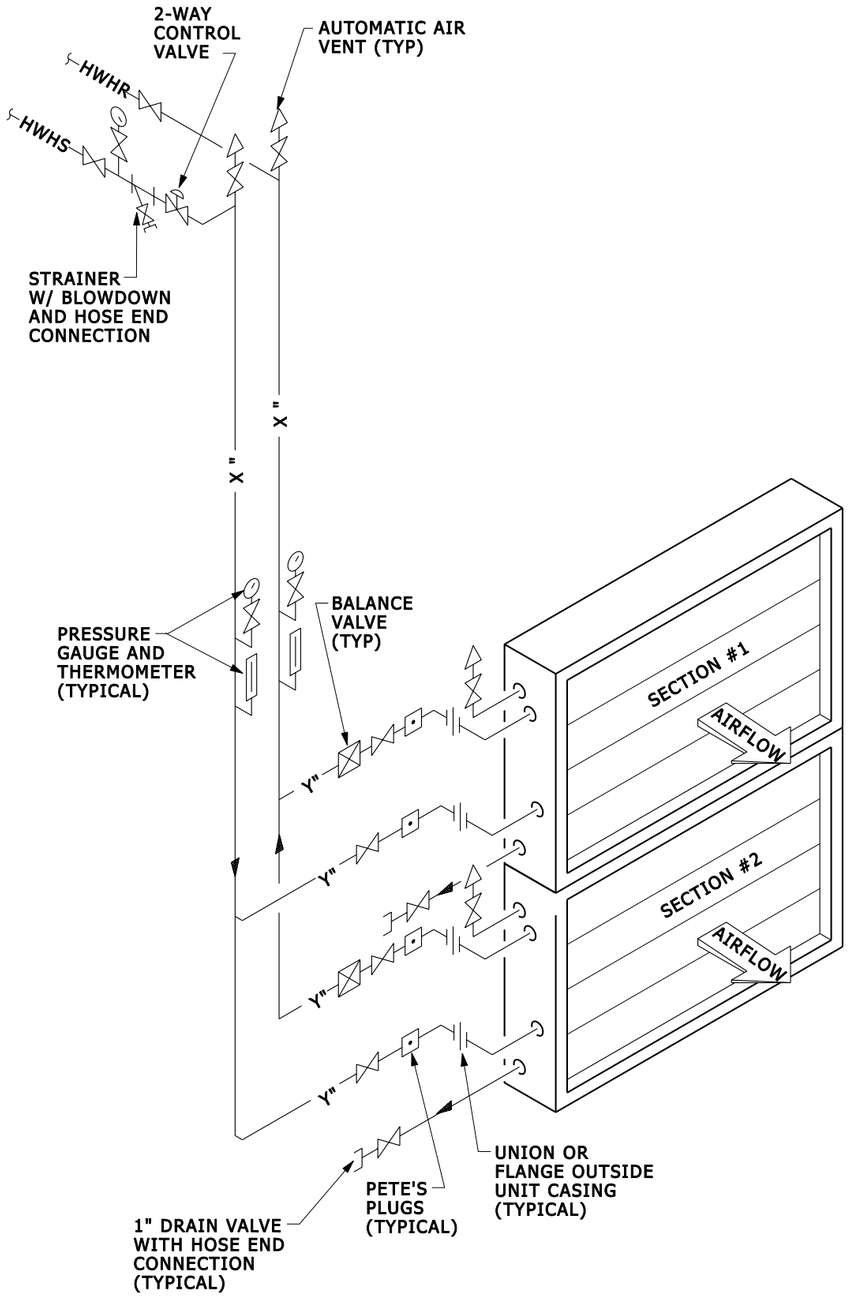

NOTES

1. OFFSET PIPING AT COIL AS REQUIRED TO ALLOW FOR COIL REMOVAL.
2. PROVIDE UNION OR FLANGE, AS REQUIRED, AT CONTROL VALVE TO ALLOW REMOVAL.

HOT WATER HEATING COIL PIPING CONNECTIONS DETAIL FOR STACKED COILS

NO SCALE — SIMILAR FOR SINGLE COIL

D 15820 001 06 06

REFERENCED DETAILS/SCHEDULES:
S 18550 001

ADDITIONAL INFORMATION:

MODULES: 2

UNIVERSITY OF MICHIGAN
ARCHITECTURE, ENGINEERING AND CONSTRUCTION
ARCHITECTURE & ENGINEERING
326 East Hoover, Mail Stop B
Ann Arbor, MI 48109-1002
Phone: 734-764-3414
Fax: 734-936-3334

Hot Water Heating Coil Detail-2-Way Control Valve

DIVISION: 15
SECTION: 15820
FILE: D 15820 001 06 06.dgn
ISSUE DATE: 06/01/06

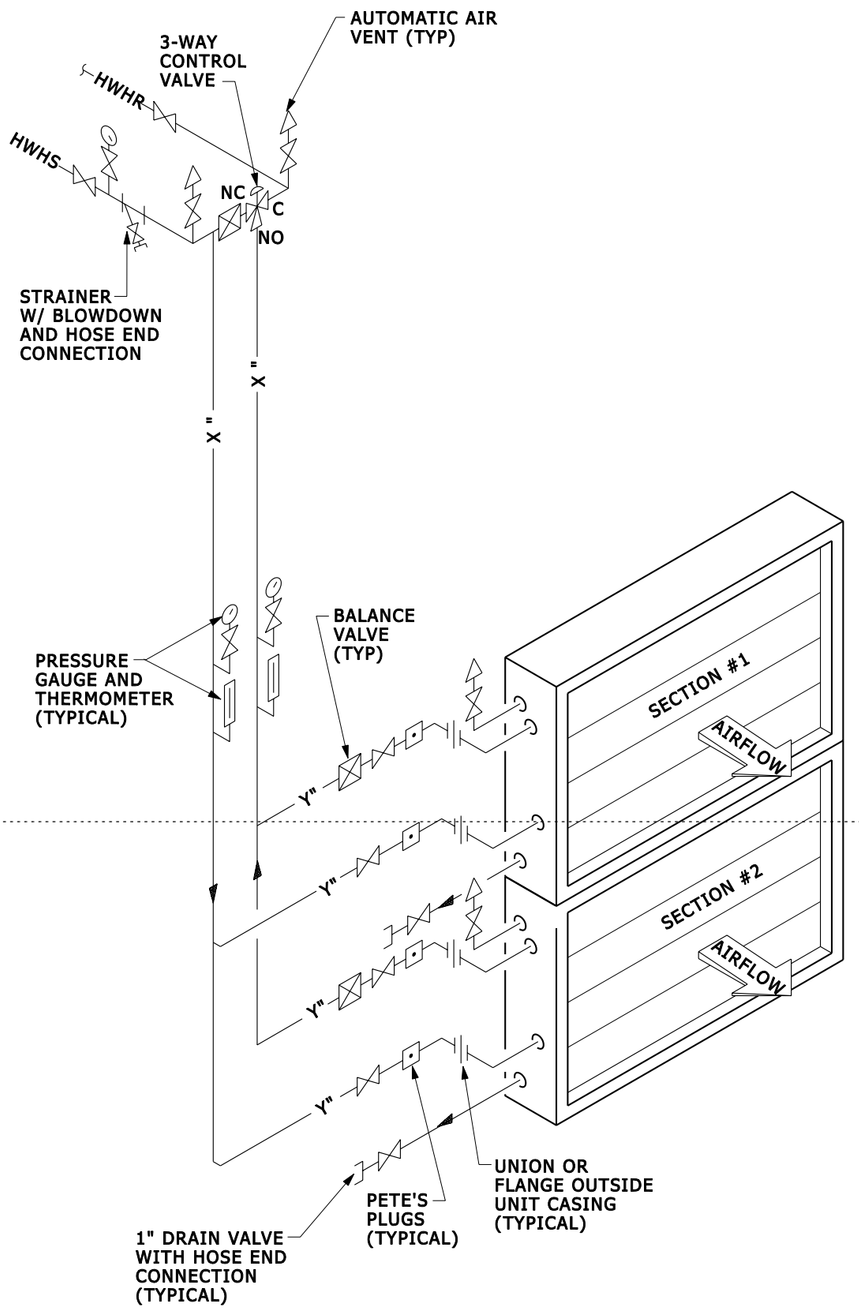

NOTES

1. OFFSET PIPING AT COIL AS REQUIRED TO ALLOW FOR COIL REMOVAL.
2. PROVIDE UNION OR FLANGE, AS REQUIRED, AT CONTROL VALVE TO ALLOW REMOVAL.

HOT WATER HEATING COIL PIPING CONNECTIONS DETAIL FOR STACKED COILS

NO SCALE — SIMILAR FOR SINGLE COIL

D 15820 002 06 06

REFERENCED DETAILS/SCHEDULES:
S 15855 001

ADDITIONAL INFORMATION:

MODULES: 2

UNIVERSITY OF MICHIGAN
ARCHITECTURE, ENGINEERING AND CONSTRUCTION
ARCHITECTURE & ENGINEERING
326 East Hoover, Mail Stop B
Ann Arbor, MI 48109-1002
Phone: 734-764-3414
Fax: 734-936-3334

Hot Water Heating Coil
Detail-3-Way Control Valve

DIVISION: 15
SECTION: 15820
FILE: D 15820 002 06 06.dgn
ISSUE DATE: 06/01/06

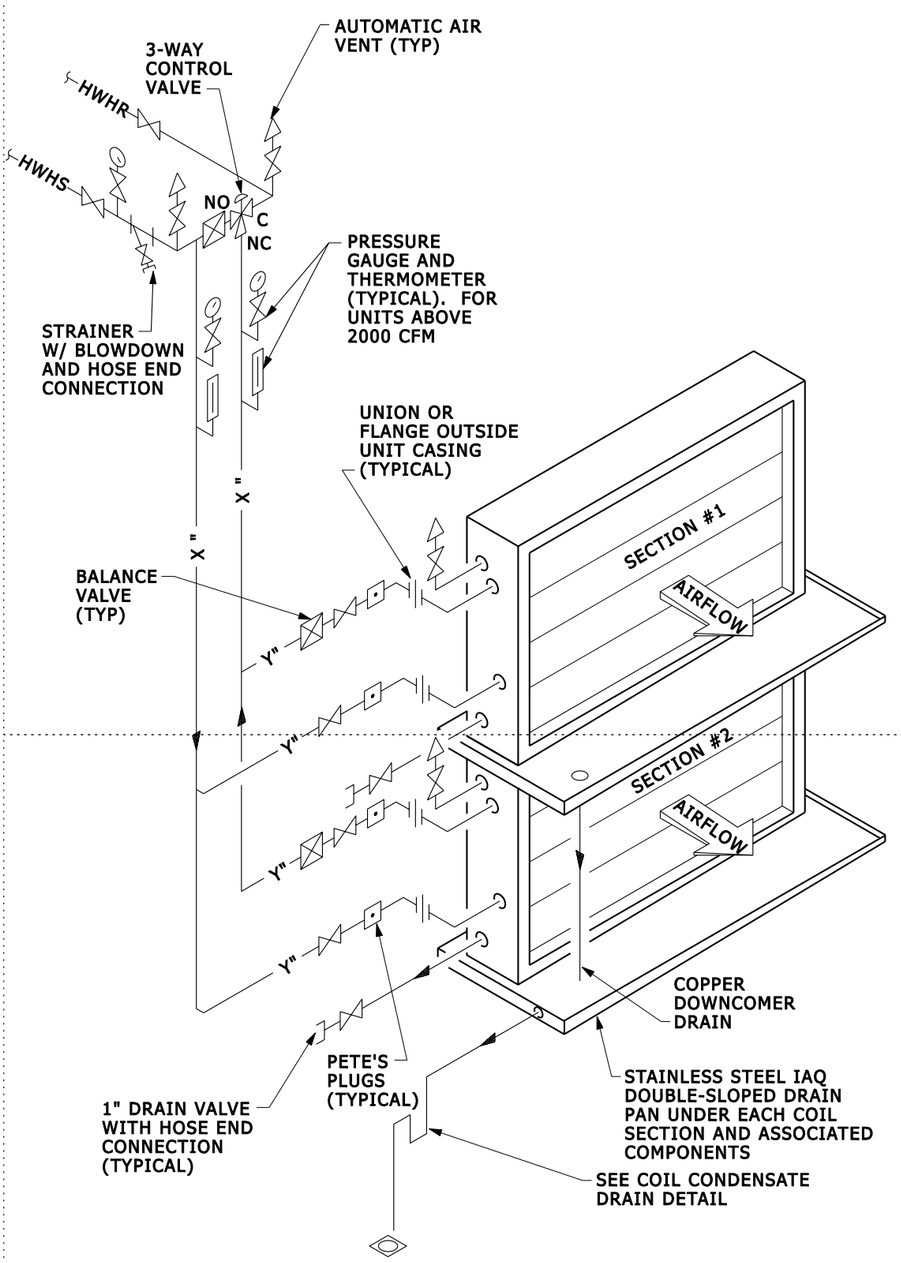

NOTES

1. OFFSET PIPING AT COIL AS REQUIRED TO ALLOW FOR COIL REMOVAL.
2. PROVIDE UNION OR FLANGE, AS REQUIRED, AT CONTROL VALVE TO ALLOW REMOVAL.

CHILLED WATER COIL PIPING CONNECTIONS DETAIL FOR STACKED COILS

NO SCALE — SIMILAR FOR SINGLE COIL

D 15820 101 06 06

REFERENCED DETAILS/SCHEDULES:
S 15855 001 D 15830 001

ADDITIONAL INFORMATION:

MODULES: 2

UNIVERSITY OF MICHIGAN
ARCHITECTURE, ENGINEERING AND CONSTRUCTION
ARCHITECTURE & ENGINEERING
326 East Hoover, Mail Stop B
Ann Arbor, MI 48109-1002
Phone: 734-764-3414
Fax: 734-936-3334

Chilled Water Cooling Coil Detail-3-Way Control Valve

DIVISION: 15
SECTION: 15820
FILE: D 15820 101 06 06.dgn
ISSUE DATE: 06/01/06

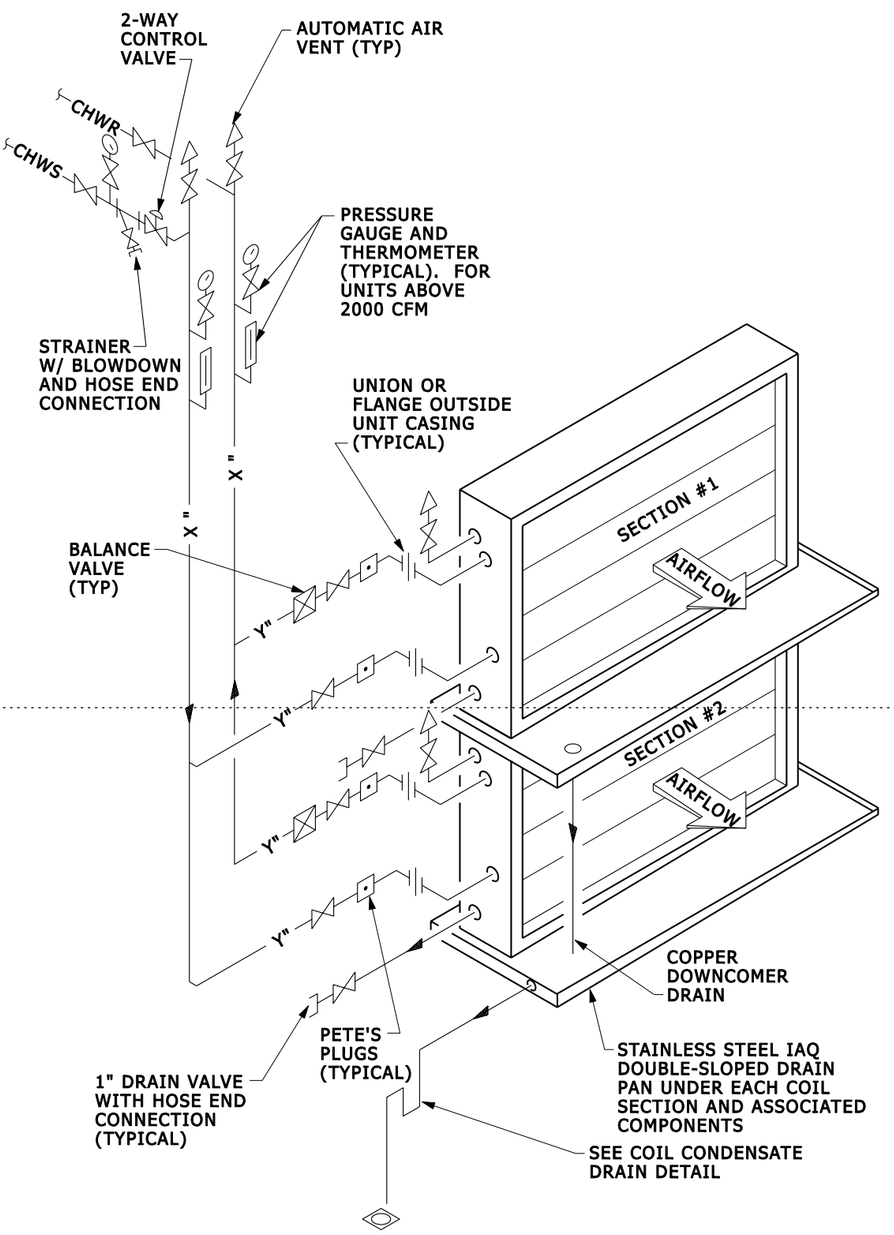

NOTES

1. OFFSET PIPING AT COIL AS REQUIRED TO ALLOW FOR COIL REMOVAL.
2. PROVIDE UNION OR FLANGE, AS REQUIRED, AT CONTROL VALVE TO ALLOW REMOVAL.

CHILLED WATER COIL PIPING CONNECTIONS DETAIL FOR STACKED COILS

NO SCALE SIMILAR FOR SINGLE COIL

D 15820 102 06 06

REFERENCED DETAILS/SCHEDULES:
S 15855 001 D 15830 001

ADDITIONAL INFORMATION:

MODULES: 2

UNIVERSITY OF MICHIGAN
ARCHITECTURE, ENGINEERING AND CONSTRUCTION
ARCHITECTURE & ENGINEERING
326 East Hoover, Mail Stop B
Ann Arbor, MI 48109-1002
Phone: 734-764-3414
Fax: 734-936-3334

Chilled Water Cooling Coil Detail-2-Way Control Valve

DIVISION: 15
SECTION: 15820
FILE: D 15820 102 06 06.dgn
ISSUE DATE: 06/01/06

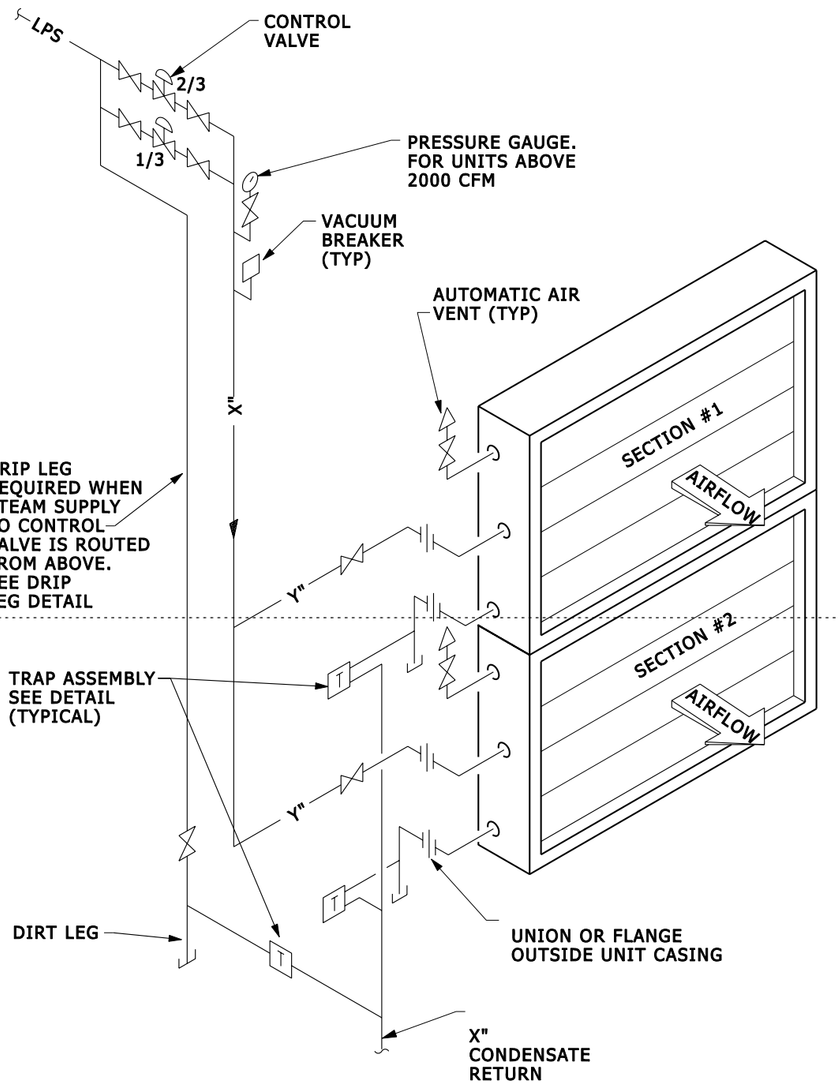

NOTES

1. OFFSET PIPING AT COIL AS REQUIRED TO ALLOW FOR COIL REMOVAL.
2. TWO CONTROL VALVES (2/3 AND 1/3) ARE REQUIRED ONLY WHEN LPS PIPE SIZE IS GREATER THAN 2½".
3. PROVIDE UNION OR FLANGE, AS REQUIRED, AT CONTROL VALVE TO ALLOW REMOVAL.

STEAM COIL PIPING CONNECTIONS DETAIL FOR STACKED COILS

NO SCALE — SIMILAR FOR SINGLE COIL

D 15820 201 06 03

REFERENCED DETAILS/SCHEDULES:
S 15855 001 D 15525 001

ADDITIONAL INFORMATION:

MODULES: 2

UNIVERSITY OF MICHIGAN
ARCHITECTURE, ENGINEERING AND CONSTRUCTION
ARCHITECTURE & ENGINEERING
326 East Hoover, Mail Stop B
Ann Arbor, MI 48109-1002
Phone: 734-764-3414
Fax: 734-936-3334

Steam Heating Coil Detail

DIVISION: 15
SECTION: 15820
FILE: D 15820 201 06 03.dgn
ISSUE DATE: 06/30/03

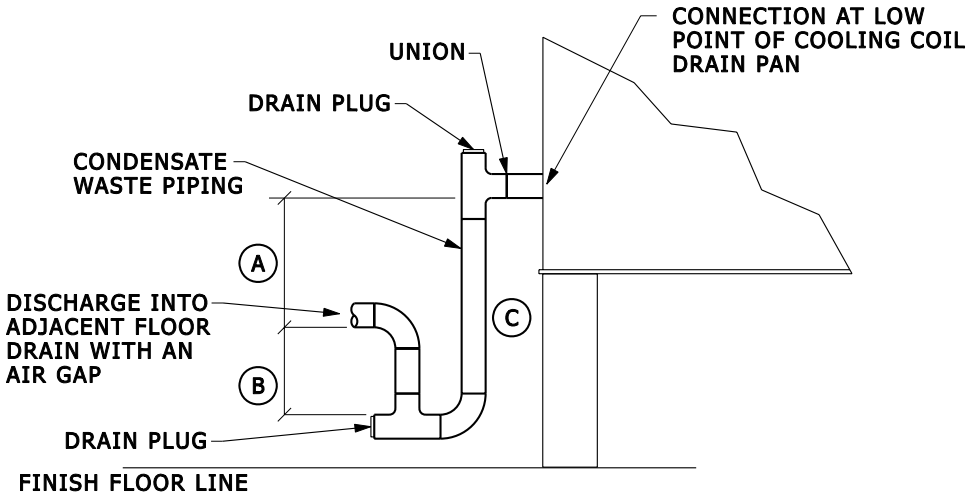

SIZING SCHEDULE

MARK	(A) LENGTH (IN)	(B) LENGTH (IN)	(C) PIPE SIZE (IN)
AHU-1			

REFERENCE NOTES

(A) GENERALLY SIZE DIMENSION FOR MAXIMUM SUCTION PRESSURE (WC) DIRECTLY DOWNSTREAM OF AHU COOLING COIL, PLUS, IF CLEARANCE ALLOWS, A SAFETY FACTOR OF 1".

(B) GENERALLY SIZE DIMENSION FOR (A)/2, PLUS, IF CLEARANCE ALLOWS, A SAFETY FACTOR OF 1".

DRAW-THRU COIL CONDENSATE DRAIN DETAIL

NO SCALE

D 15830 001 05 04

6/13/2006 11:03:45 AM RPAN Q:\AES\MECH\Mech Tech Teams\Ready for Approval\HVAC\D 15830 001 05 04.dgn

REFERENCED DETAILS/SCHEDULES:
D 15820 001 D 15820 101
D 15820 102

ADDITIONAL INFORMATION:

MODULES: 1

UNIVERSITY OF MICHIGAN
ARCHITECTURE, ENGINEERING AND CONSTRUCTION

ARCHITECTURE & ENGINEERING
326 East Hoover, Mail Stop B
Ann Arbor, MI 48109-1002
Phone: 734-764-3414
Fax: 734-936-3334

Coil Condensate Drain Detail

DIVISION: 15
SECTION: 15830
FILE: D 15830 001 05 04.dgn
ISSUE DATE: 05/17/04

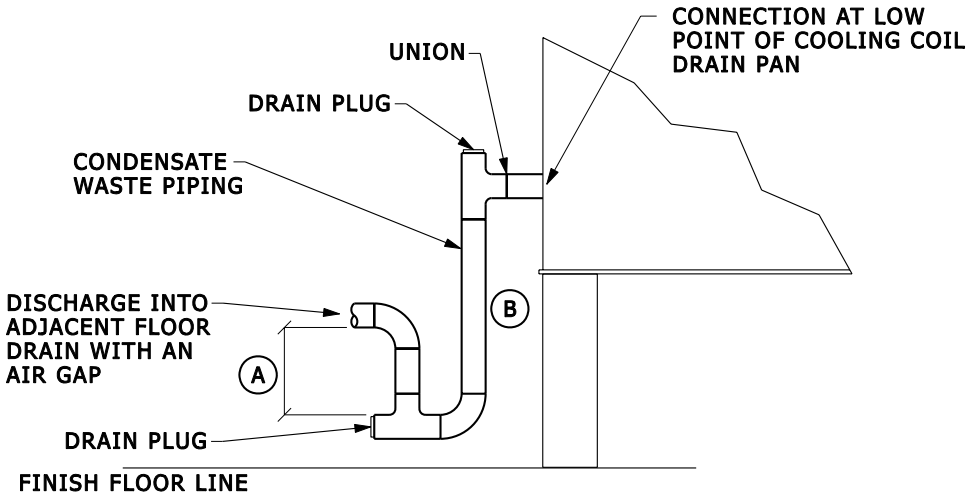

SIZING SCHEDULE

MARK	(A) LENGTH (IN)	(B) PIPE SIZE (IN)
AHU-1		

REFERENCE NOTES

(A) GENERALLY SIZE DIMENSION FOR MAXIMUM PRESSURE (WC) DIRECTLY DOWNSTREAM OF AHU COOLING COIL, PLUS, IF CLEARANCE ALLOWS, A SAFETY FACTOR OF 1".

BLOW-THRU COIL CONDENSATE DRAIN DETAIL

NO SCALE

D 15830 002 05 04

6/13/2006 11:04:33 AM RPAN Q:\AES\MECH\Mech Tech Teams\Ready for Approval\HVAC\D 15830 002 05 04.dgn

REFERENCED DETAILS/SCHEDULES:
D 15820 001 D 15820 101
D 15820 102

ADDITIONAL INFORMATION:

MODULES: 1

UNIVERSITY OF MICHIGAN
ARCHITECTURE, ENGINEERING AND CONSTRUCTION

ARCHITECTURE & ENGINEERING
326 East Hoover, Mail Stop B
Ann Arbor, MI 48109-1002
Phone: 734-764-3414
Fax: 734-936-3334

Coil Condensate Drain Detail

DIVISION: 15
SECTION: 15830
FILE: D 15830 002 05 04.dgn
ISSUE DATE: 05/17/04

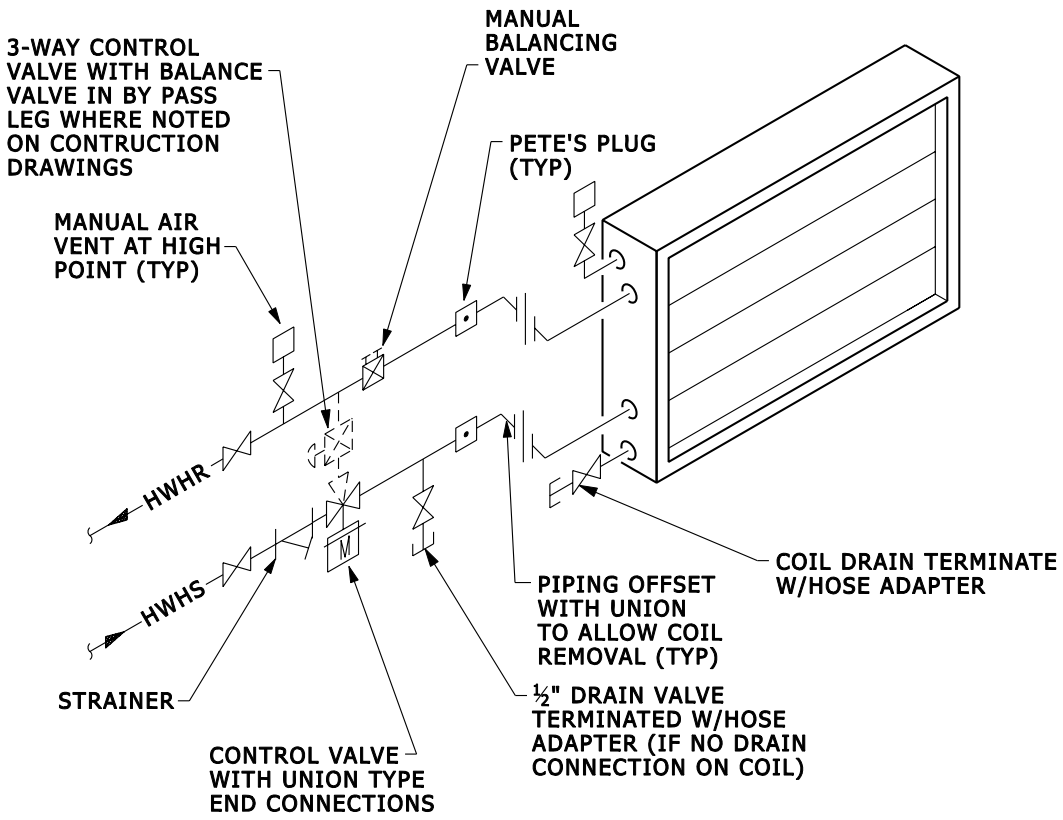

DUCT-MOUNTED REHEAT COIL - HOT WATER HEATING PIPING CONNECTIONS DETAIL

NO SCALE

D 15830 101 12 03

6/13/2006 11:05:13 AM RPAN Q:\AES\MECH\Mech Tech Teams\Ready for Approval\HVAC\D 15830 101 12 03.dgn

REFERENCED DETAILS/SCHEDULES:
S XXXXX XXX

ADDITIONAL INFORMATION:

MODULES: 1

UNIVERSITY OF MICHIGAN
ARCHITECTURE, ENGINEERING AND CONSTRUCTION

ARCHITECTURE & ENGINEERING
326 East Hoover, Mail Stop B
Ann Arbor, MI 48109-1002
Phone: 734-764-3414
Fax: 734-936-3334

Duct Mounted RHC - HWH Piping Detail

DIVISION: 15
SECTION: 15830
FILE: D 15830 101 12 03.dgn
ISSUE DATE: 12/09/03

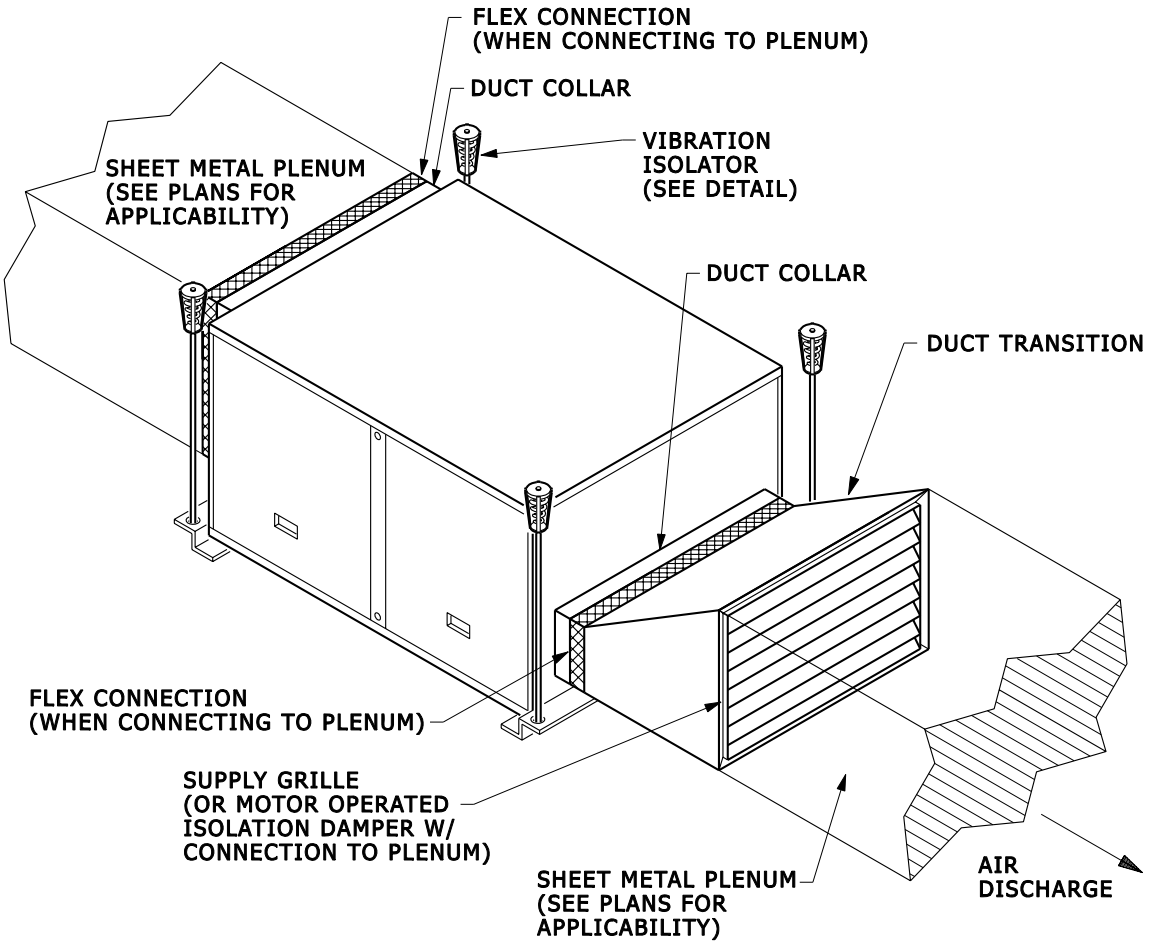

FAN COIL UNIT INSTALLATION DETAIL

NO SCALE

D 15851 101 07 03

6/13/2006 11:05:42 AM RPAN Q:\AES\MECH\Mech Tech Teams\Ready for Approval\HVAC\D 15851 101 07 03.dgn

REFERENCED DETAILS/SCHEDULES:
S 15851 001 D 15830 001

ADDITIONAL INFORMATION:

MODULES: 1

UNIVERSITY OF MICHIGAN
ARCHITECTURE, ENGINEERING AND CONSTRUCTION

ARCHITECTURE & ENGINEERING
326 East Hoover, Mail Stop B
Ann Arbor, MI 48109-1002
Phone: 734-764-3414
Fax: 734-936-3334

Ceiling Mounted Fan Coil Unit Installation Detail

DIVISION: 15
SECTION: 15851
FILE: D 15851 001 07 03.dgn
ISSUE DATE: 07/01/03

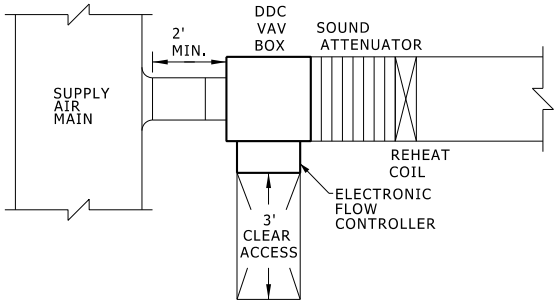

PLAN VIEW

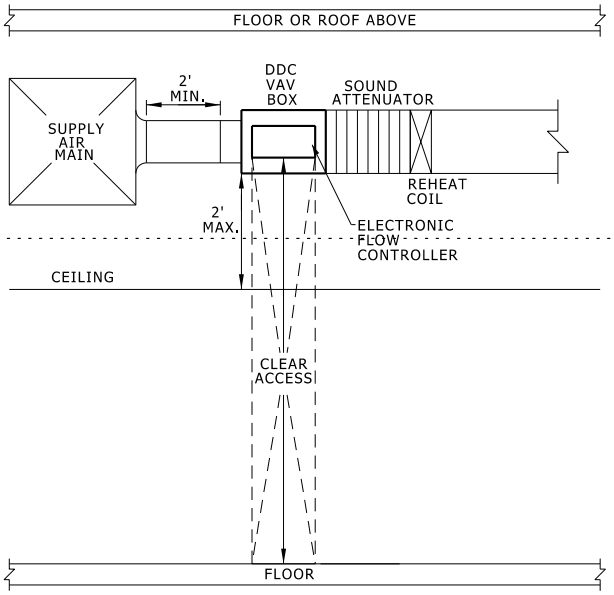

ELEVATION

TAU NAMING CONVENTION:

TAU NO. = ABBBB-C

POSITION "A" = "S" FOR SUPPLY AIR
"E" FOR EXHAUST AIR
"R" FOR RETURN AIR

POSITION "BBBB" = ROOM SERVED. WHERE MULTIPLE ROOMS ARE SERVED, INDICATED THE FIRST ROOM THE BOX SERVES RELATIVE TO ITS DISCHARGE.

POSITION "-C" = 1, 2, 3, ETC., USED WHEN MULTIPLE TAU'S SERVE A SINGLE SPACE.

NOTE: LABEL THE TAU WITH THE UNIQUE IDENTIFIER IN BLACK PERMANENT MARKER ON THE BOTTOM AND SIDE OF THE TAU USING A MINIMUM OF 3" HIGH LETTERS/NUMBERS.

SUPPLY AIR DDC TAU CLEARANCE DETAIL

NO SCALE (EXHAUST/RETURN AIR TAU SIMILAR) D 15896 002 07 09

REFERENCED DETAILS/SCHEDULES:

ADDITIONAL INFORMATION:

MODULES: 2

UNIVERSITY OF MICHIGAN
ARCHITECTURE, ENGINEERING AND CONSTRUCTION
ARCHITECTURE & ENGINEERING
326 East Hoover, Mail Stop B
Ann Arbor, MI 48109-1002
Phone: 734-764-3414
Fax: 734-936-3334

Supply Air TAU Clearance Detail

DIVISION: 15
SECTION: 15896
FILE: D 15896 001 07 09.dgn
ISSUE DATE: 07/XX/09

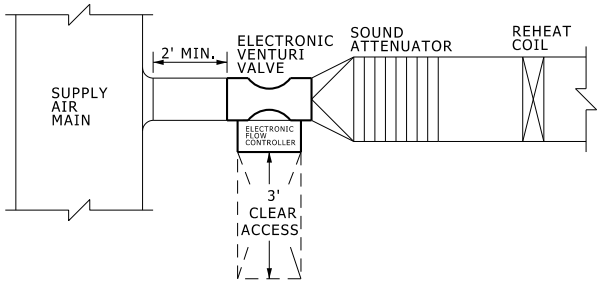

PLAN VIEW

(EXHAUST/RETURN AIR LTAU SIMILAR)

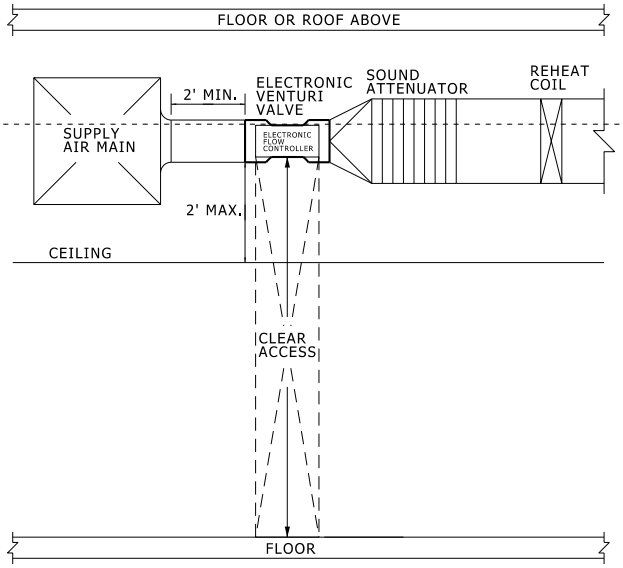

ELEVATION

(EXHAUST/RETURN AIR LTAU SIMILAR)

SUPPLY AIR LTAU CLEARANCE DETAIL

NO SCALE

D 15910 008 07 09

-

REFERENCED DETAILS/SCHEDULES:

-

ADDITIONAL INFORMATION:

MODULES: 2

UNIVERSITY OF MICHIGAN
ARCHITECTURE, ENGINEERING AND CONSTRUCTION
ARCHITECTURE & ENGINEERING
326 East Hoover, Mail Stop B
Ann Arbor, MI 48109-1002
Phone: 734-764-3414
Fax: 734-936-3334

Supply Air LTAU Clearance Detail

DIVISION: 15
SECTION: 15910
FILE: D 15910 008 07 09.dgn
ISSUE DATE: 07/XX/09

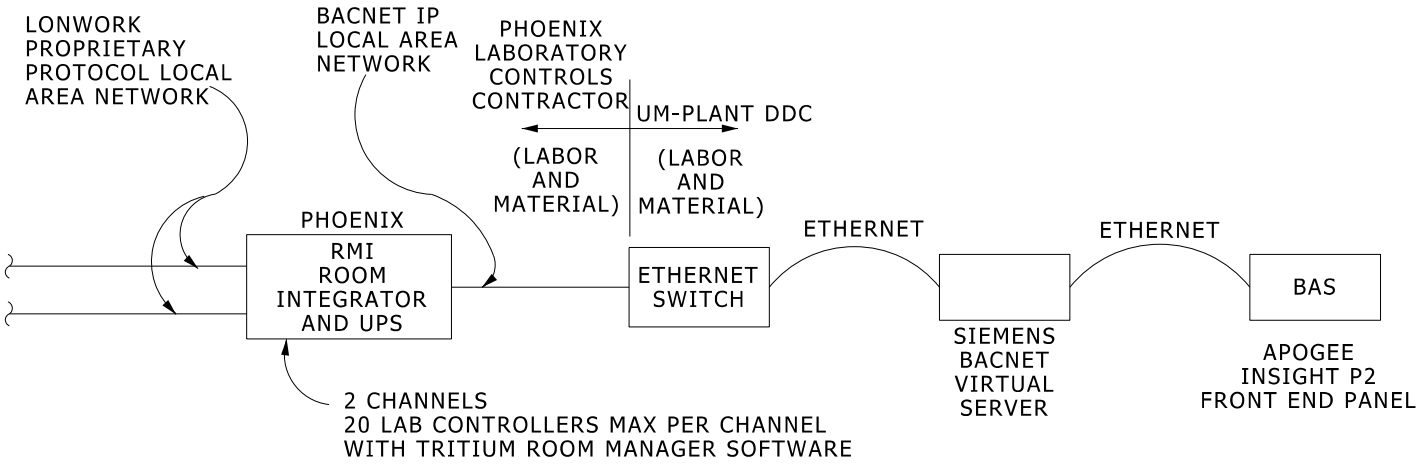

PHOENIX LAB DDC ARCHITECTURE

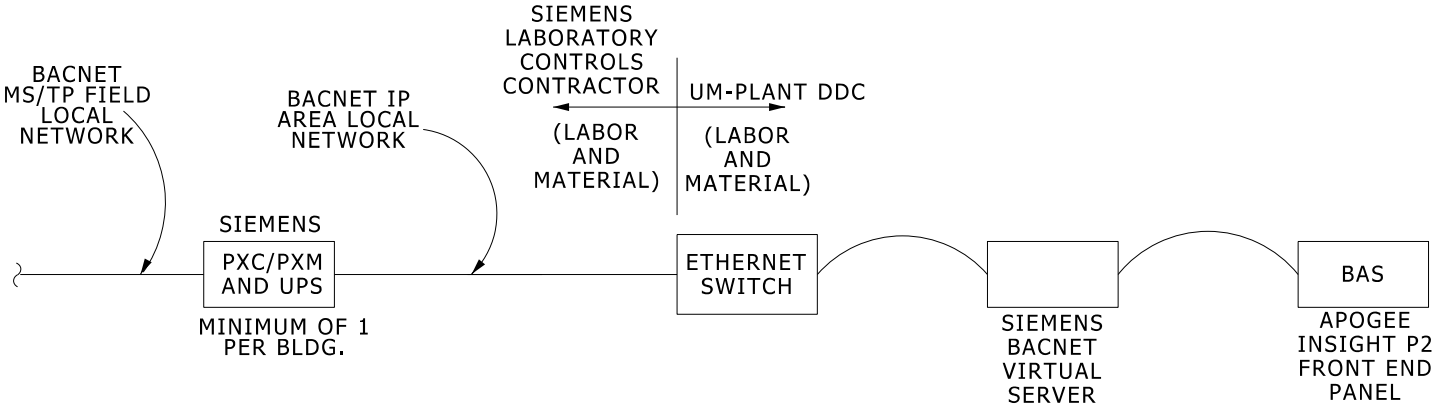

SIEMENS LAB DDC ARCHITECTURE

LAB DDC ARCHITECTURE AND SCOPE OF WORK

1. GENERIC DDC ARCHITECTURE IS IDENTIFIED FOR CONNECTION BETWEEN LAN/ALN AND UM BAS. SEE PROJECT SPECIFIC LABORATORY AIRFLOW CONTROLS DIAGRAMS FOR REQUIREMENTS WITHIN EACH LABORATORY.
2. SEE MASTER SPECIFICATION 230910 LABORATORY AIRFLOW CONTROL-DDC FOR ADDITIONAL INFORMATION.

TYPICAL LAB DDC ARCHITECTURE

NO SCALE

D 15910 009 06 16.dgn

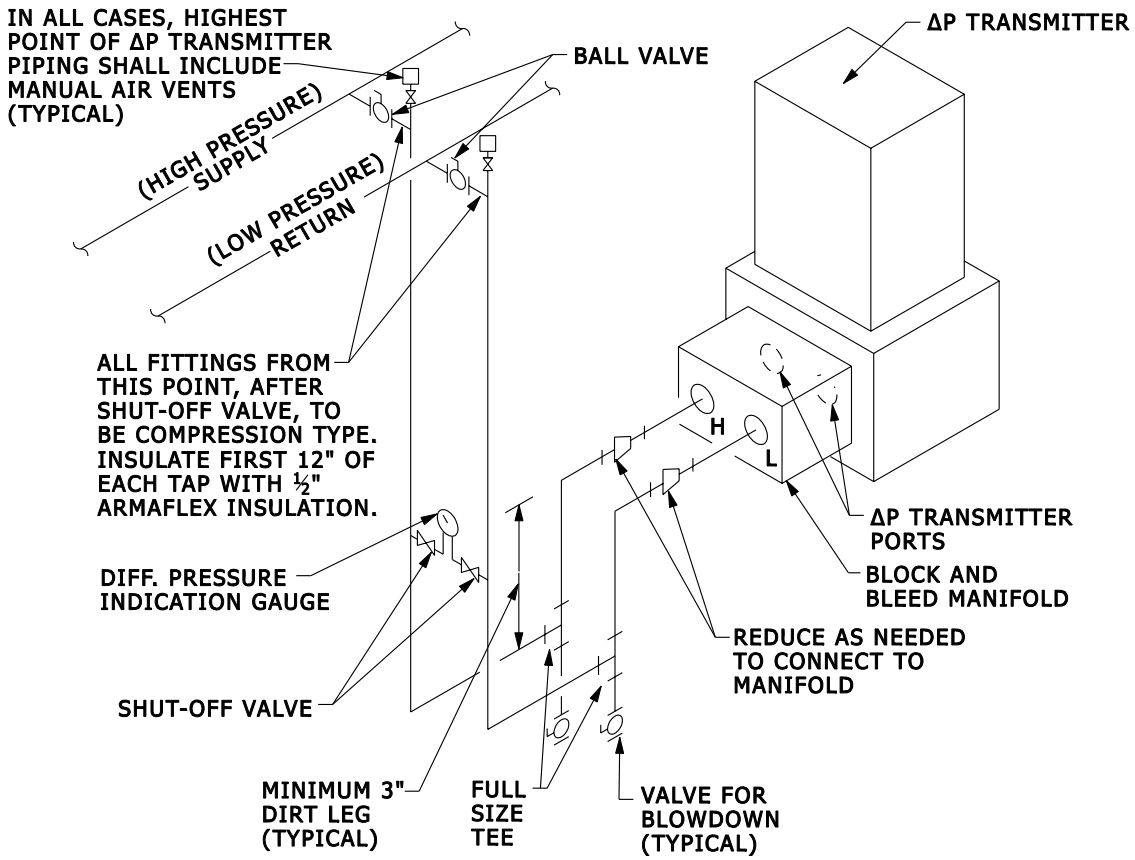

NOTES:
1. ALL PIPING SIZE IS ⅜" DIAMETER MINIMUM.
2. ALL INSTRUMENTATION PIPING TO BE FURNISHED AND INSTALLED BY CONTROLS CONTRACTOR

DIFFERENTIAL PRESSURE TRANSMITTER INSTALLATION DETAIL (LIQUID)

NO SCALE

D 15525 001 06 06

6/27/2006 8:52:01 AM RPAN Q:\AES\MECH\Mech Tech Teams\Ready for Approval\HVAC\D 15975 001 06 06.dgn

REFERENCED DETAILS/SCHEDULES:
S XXXXX XXX D XXXXX XXX

ADDITIONAL INFORMATION:

MODULES: 1

UNIVERSITY OF MICHIGAN
ARCHITECTURE, ENGINEERING AND CONSTRUCTION

ARCHITECTURE & ENGINEERING
326 East Hoover, Mail Stop B
Ann Arbor, MI 48109-1002
Phone: 734-764-3414
Fax: 734-936-3334

Differential Pressure Transmitter Installation Detail

DIVISION: 15
SECTION: 15975
FILE: D 15975 001 06 06.dgn
ISSUE DATE: 06/22/06

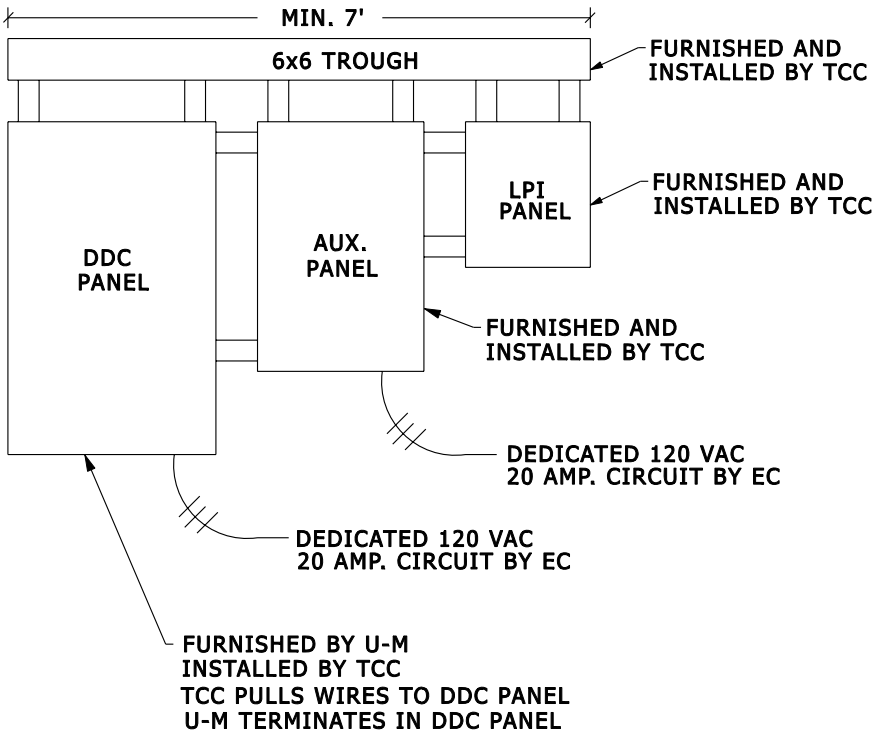

TCC = TEMPERATURE CONTROL CONTRACTOR
EC = ELECTRICAL CONTRACTOR
U-M = UNIVERSITY OF MICHIGAN

TYPICAL DDC PANEL ASSEMBLY

NO SCALE

D 15975 002 06 06

6/27/2006 8:52:43 AM RPAN Q:\AES\MECH\Mech Tech Teams\Ready for Approval\HVAC\D 15975 002 06 06.dgn

REFERENCED DETAILS/SCHEDULES:
S XXXXX XXX D XXXXX XXX

ADDITIONAL INFORMATION:

MODULES: 1

UNIVERSITY OF MICHIGAN
ARCHITECTURE, ENGINEERING AND CONSTRUCTION

ARCHITECTURE & ENGINEERING
326 East Hoover, Mail Stop B
Ann Arbor, MI 48109-1002
Phone: 734-764-3414
Fax: 734-936-3334

Typical DDC Panel Assembly

DIVISION: 15
SECTION: 15975
FILE: D 15975 002 06 06.dgn
ISSUE DATE: 06/22/06

NOTES:

1. ALL REQUIRED COMPONENTS AND ACCESSORIES ARE NOT IDENTIFIED. REFER TO CONSTRUCTION DOCUMENTS, INCLUDING PLANS, ELEVATIONS, DETAILS AND SPECIFICATIONS, FOR ADDITIONAL REQUIREMENTS.

DESIGNER NOTES:

1. COMPLETE ALL MISSING INFORMATION.
2. REVIEW STEAM TO WATER HEAT EXCHANGER SYSTEM DESIGN GUIDELINE DG 235716 AND MASTER SPECIFICATION MS 235716 FOR ADDITIONAL INFORMATION.

CONTROLS EQUIPMENT LIST	
ITEM NO.	DESCRIPTION
DPT	DIFF. PRESSURE TRANSMITTER
XDCR	E/P TRANSDUCER
CV	CONTROL VALVE
TSW *	TEMPERATURE SENSOR, WATER
EMFM	ELECTROMAGNETIC FLOW METER
CSR	CURRENT SENSING RELAY
LPI	LOOP POWERED INDICATOR

* TSW1 & TSW4 ARE HIGH PRECISION MATCHED TEMPERATURE SENSOR ASSEMBLIES FOR BTU MEASUREMENT.

RESET SCHEDULE	
OA TEMP (DEG. F)	HWH SUPPLY TEMP (DEG. F)
>65	
65	
55	
0	

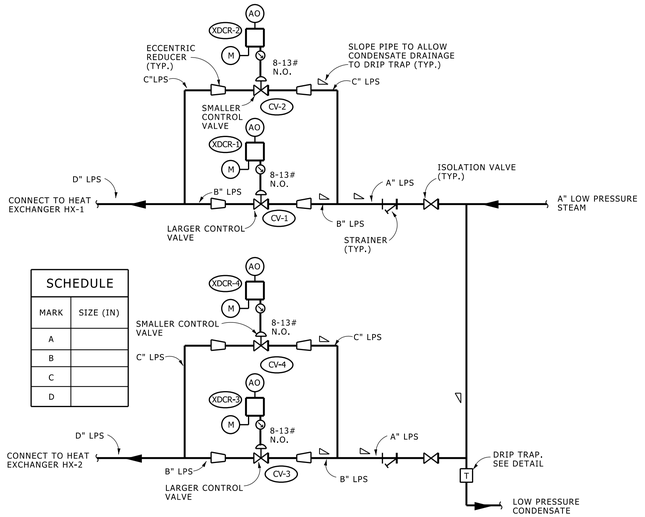

CRITICAL HEAT EXCHANGER STEAM CONTROL STATION

NO SCALE

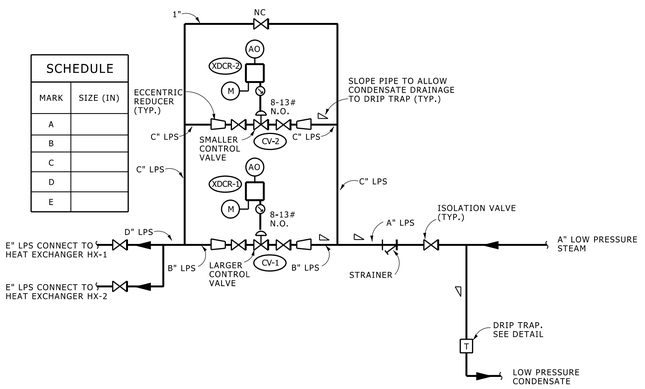

NON CRITICAL HEAT EXCHANGER STEAM CONTROL STATION

NO SCALE

CRITICAL HEAT EXCHANGER SYSTEM

DESIGN INTENT:

1. EACH HEAT EXCHANGER, STEAM CONTROL VALVE STATION, AND PUMP ARE SIZED TO HANDLE APPROXIMATELY (FILL IN PERCENT) PERCENT OF THE PEAK DIVERSIFIED HWH LOAD.

2. ONE HEAT EXCHANGER, ONE STEAM CONTROL VALVE STATION, OR ONE PUMP CAN BE OUT OF SERVICE WHILE MEETING THE PEAK DIVERSIFIED HWH LOAD.

3. MINIMUM (FILL IN GPM) HWH FLOW IS ATTAINED BY (BYPASS? THREE WAY VALVES? INCLUDE IN SEQUENCE IF REQUIRED).

SEQUENCE OF OPERATION:

1. SYSTEM SHALL OPERATE CONTINUOUSLY.

2. DDC SHALL SEQUENTIALLY CONTROL THE LEAD STEAM VALVES TO ACHIEVE THE CURRENT TSW-1 SETPOINT AND LEAD PUMP TO ACHIEVE DPT-1 SETPOINT.

3. OPERATING PUMP SPEED SHALL BE A MINIMUM OF 12 HZ.

4. ROTATING HEAT EXCHANGER OPERATION

A. EACH HEAT EXCHANGER, STEAM CONTROL VALVE STATION, AND PUMP SHALL BE ROTATED WEEKLY IN OR OUT OF SERVICE BY THE DDC TO EQUALIZE RUN TIME. HEAT EXCHANGER ROTATION SHALL ALSO OCCUR WHEN INITIATED BY AN OPERATING CONDITION DESCRIBED IN OTHER SEQUENCE PARAGRAPHS.

B. TO ROTATE OPERATION, DDC SHALL FIRST START THE LAG PUMP AT 1/3 OF LEAD PUMP SPEED AND CONTROL THE LAG STEAM VALVE(S) TO MAINTAIN CURRENT TSW-1 SETPOINT BY CONTROLLING TO THE LAG CONVERTER'S RESPECTIVE DISCHARGE TEMPERATURE TRANSMITTER (TSW-2 OR TSW-3). AFTER A TIME DELAY TO ALLOW LAG HEAT EXCHANGER TEMPERATURE CONTROL TO STABLIZE, GRADUALLY INCREASE LAG PUMP SPEED UNTIL LEAD AND LAG PUMP SPEEDS ARE EQUAL, AFTER ADJUSTABLE ONE MINUTE TIME DURATION, RELEASE LAG PUMP FOR CONTROL TO THE DPT-1 SETPOINT AND LAG STEAM VALVES FOR CONTROL TO THE TSW-1 SETPOINT. THEN GRADUALLY DECREASE THE LEAD HEAT EXCHANGER PUMP SPEED UNTIL IT REACHES MINIMUM SPEED. THEN, IF NOT ALREADY CLOSED, LEAD STEAM VALVES SHALL CLOSE. 5 MINUTES LATER, LEAD PUMP SHALL STOP.

C. WHEN DCC ROTATES HEAT EXCHANGER OPERATION, IF DPT-1 OR TSW-1 SET POINT IS NOT ATTAINED BY LAG SYSTEM AFTER TIME DELAY, DDC SHALL ALARM AND SWITCH BACK TO LEAD HEAT EXCHANGER OPERATION.

5. STEAM VALVE CONTROL

A. THE DDC SHALL SEQUENTIALLY MODULATE THE STEAM CONTROL VALVES TO PRODUCE THE REQUIRED SETPOINT AT TSW-1. THE TSW-1 SETPOINT CHANGES BASED ON THE INDICATED RESET SCHEDULE.

B. UPON AN INCREASE IN LOAD, FIRST MODULATE OPEN THE SMALLEST CONTROL VALVE. UPON CONTINUED INCREASE IN LOAD, MODULATE OPEN THE NEXT LARGER CONTROL VALVE. UPON A DECREASE IN LOAD, THE OPPOSITE SHALL OCCUR, FIRST MODULATING CLOSED THE LARGEST CONTROL VALVE.

C. IF TSW-1 IS ± 10°F FROM SETPOINT AFTER TIME DELAY, DDC SHALL ROTATE HEAT EXCHANGER OPERATION. UNTIL FAULT IS CORRECTED, DDC SHALL NO LONGER ROTATE HEAT EXCHANGER OPERATION.

D. IF TSW-1 IS 220°F OR GREATER, DDC SHALL SHUT DOWN STEAM VALVES THEN STOP PUMP 5 MINUTES AFTER STEAM VALVES CLOSE. DO NOT ROTATE HEAT EXCHANGER OPERATION.

6. PUMP CONTROL

A. DDC SHALL MODULATE THE PUMP VFD AS REQUIRED TO MEET THE DIFFERENTIAL PRESSURE SETPOINT AT DPT-1. THE INITIAL SETPOINT SHALL BE (FILL IN PSI) PSI. THE FINAL SETPOINT SHALL BE DETERMINED WITH THE WATER BALANCER DURING TEST AND BALANCE.

B. (DPT-1 SETPOINT CHANGES TO MAINTAIN WORST CASE TERMINAL VALVE AT 90% OF FULL OPENING.) (DPT-1 SETPOINT CHANGES BASED ON THE INDICATED OUTDOOR AIR RESET SCHEDULE.)

C. IF DPT-1 FALLS MORE THAN 2 PSI BELOW SETPOINT AFTER TIME DELAY, DDC SHALL ROTATE HEAT EXCHANGER OPERATION. UNTIL FAULT IS CORRECTED, DDC SHALL NO LONGER ROTATE HEAT EXCHANGER OPERATION.

7. BAS DDC ALARMS AFTER AN APPROPRIATE TIME DELAY

A. PUMP STATUS DOES NOT MATCH DDC COMMAND (AS DETECTED BY CSR)
B. HEAT EXCHANGER OPERATION ROTATED DUE TO DPT-1 SETPOINT NOT ACHIEVED
C. HEAT EXCHANGER OPERATION ROTATED DUE TO TSW-1 SETPOINT NOT ACHIEVED
D. DPT-1 MORE THAN 2PSI BELOW SETPOINT
E. TSW-1 MORE THAN ± 10°F FROM SETPOINT
F. TSW-1 EXCEEDED 220F

8. BAS TREND LOGGING AND OTHER FUNCTIONS:

A. BTU/HR, 30 MINUTE READING (EMFM-1, TSW-1,TSW-4)
B. HWH GPM, 30 MINUTE READING (EMFM-1)
C. TSW-1, 2, 3, 4, 30 MINUTE READING
D. PUMP TOTAL RUN TIME, EACH PUMP

NON-CRITICAL HEAT EXCHANGER SYSTEM

DESIGN INTENT:

1. EACH HEAT EXCHANGER, STEAM CONTROL VALVE STATION, AND PUMP ARE SIZED TO HANDLE APPROXIMATELY (FILL IN PERCENT) PERCENT OF THE PEAK DIVERSIFIED HWH LOAD.

2. ALL HEAT EXCHANGERS, STEAM CONTROL VALVES, AND PUMPS MUST BE IN SERVICE TO MEET THE PEAK DIVERSIFIED HWH LOAD.

3. HWH FLOWS PROPORTIONATELY AND CONTINUOUSLY THROUGH ALL HEAT EXCHANGERS.

4. MINIMUM (FILL IN GPM) HWH FLOW IS ATTAINED BY (BYPASS? THREE WAY VALVES? INCLUDE IN SEQUENCE IF REQUIRED).

SEQUENCE OF OPERATION:

1. SYSTEM SHALL (OPERATE CONTINUOUSLY, AUTOMATICALLY START WHEN... COMPLETE THE SEQUENCE).

2. DDC SHALL SEQUENTIALLY CONTROL THE STEAM VALVES TO ACHIEVE THE CURRENT TSW-1 SETPOINT AND LEAD PUMP TO ACHIEVE DPT-1 SETPOINT.

3. OPERATING PUMP SPEED SHALL BE A MINIMUM OF 12 HZ.

4. ROTATING PUMP OPERATION

A. EACH PUMP SHALL BE ROTATED WEEKLY IN OR OUT OF SERVICE BY DDC TO EQUALIZE RUN TIME. PUMP ROTATION SHALL ALSO OCCUR WHEN INITIATED BY AN OPERATING CONDITION DESCRIBED IN OTHER SEQUENCE PARAGRAPHS.

B. TO ROTATE OPERATION, DDC SHALL FIRST START THE LAG PUMP AT 1/3 LEAD PUMP SPEED. AFTER TIME DELAY, GRADUALLY INCREASE LAG PUMP SPEED UNTIL LEAD AND LAG PUMP SPEEDS ARE EQUAL. AFTER ADJUSTABLE ONE MINUTE TIME DURATION, RELEASE LAG PUMP FOR CONTROL TO THE DPT-1 SETPOINT. THEN GRADUALLY DECREASE THE LEAD HEAT EXCHANGER PUMP SPEED UNTIL IT REACHES MINIMUM SPEED. THEN, LEAD PUMP SHALL STOP.

5. STEAM VALVE CONTROL

A. THE DDC SHALL SEQUENTIALLY MODULATE THE STEAM CONTROL VALVES TO PRODUCE THE REQUIRED SETPOINT AT TSW-1. THE TSW-1 SETPOINT CHANGES BASED ON THE INDICATED RESET SCHEDULE.

B. UPON AN INCREASE IN LOAD, FIRST MODULATE OPEN THE SMALLEST CONTROL VALVE. UPON CONTINUED INCREASE IN LOAD, MODULATE OPEN THE NEXT LARGER CONTROL VALVE. UPON A DECREASE IN LOAD, THE OPPOSITE SHALL OCCUR, FIRST MODULATING CLOSED THE LARGEST CONTROL VALVE.

C. IF TSW-1 IS ± 10°F FROM SETPOINT AFTER TIME DELAY, DDC SHALL ALARM A FAULT.

D. IF TSW-1 IS 220°F OR GREATER, DDC SHALL SHUT DOWN STEAM VALVES THEN STOP PUMP 5 MINUTES AFTER STEAM VALVES CLOSE, DO NOT ROTATE PUMP OPERATION.

6. PUMP CONTROL

A. DDC SHALL MODULATE THE LEAD AND LAG PUMP VFD IN SEQUENCE AS REQUIRED TO MEET THE DIFFERENTIAL PRESSURE SETPOINT AT DPT-1. THE INITIAL SETPOINT SHALL BE (FILL IN PSI) PSI. THE FINAL SETPOINT SHALL BE DETERMINED WITH THE WATER BALANCER DURING TEST AND BALANCE.

B. (DPT-1 SETPOINT CHANGES TO MAINTAIN WORST CASE TERMINAL VALVE AT 90% OF FULL OPENING.) (DPT-1 SETPOINT CHANGES BASED ON THE INDICATED OUTDOOR AIR RESET SCHEDULE.)

C. IF DPT-1 FALLS TO 2 PSI BELOW SETPOINT FOR 5 MINUTES (ADJUSTABLE), OR IF LEAD PUMP IS OPERATING AT 50 HZ OR GREATER FOR 5 MINUTES (ADJUSTABLE), DDC SHALL START THE LAG PUMP. DDC SHALL MODULATE BOTH PUMPS AT EQUAL SPEEDS TO MEET THE DPT-1 SETPOINT.

D. DURING OPERATION OF BOTH PUMPS, WHEN PUMP SPEED FALLS TO BELOW 20 HZ FOR 5 MINUTES (ADJUSTABLE), DDC SHALL GRADUALLY DECREASE THE LAG PUMP SPEED UNTIL IT REACHES MINIMUM SPEED. THEN, LAG PUMP SHALL STOP.
E. IF DPT-1 FALLS MORE THAN 2 PSI BELOW SETPOINT AFTER TIME DELAY, DDC SHALL ALARM A FAULT.

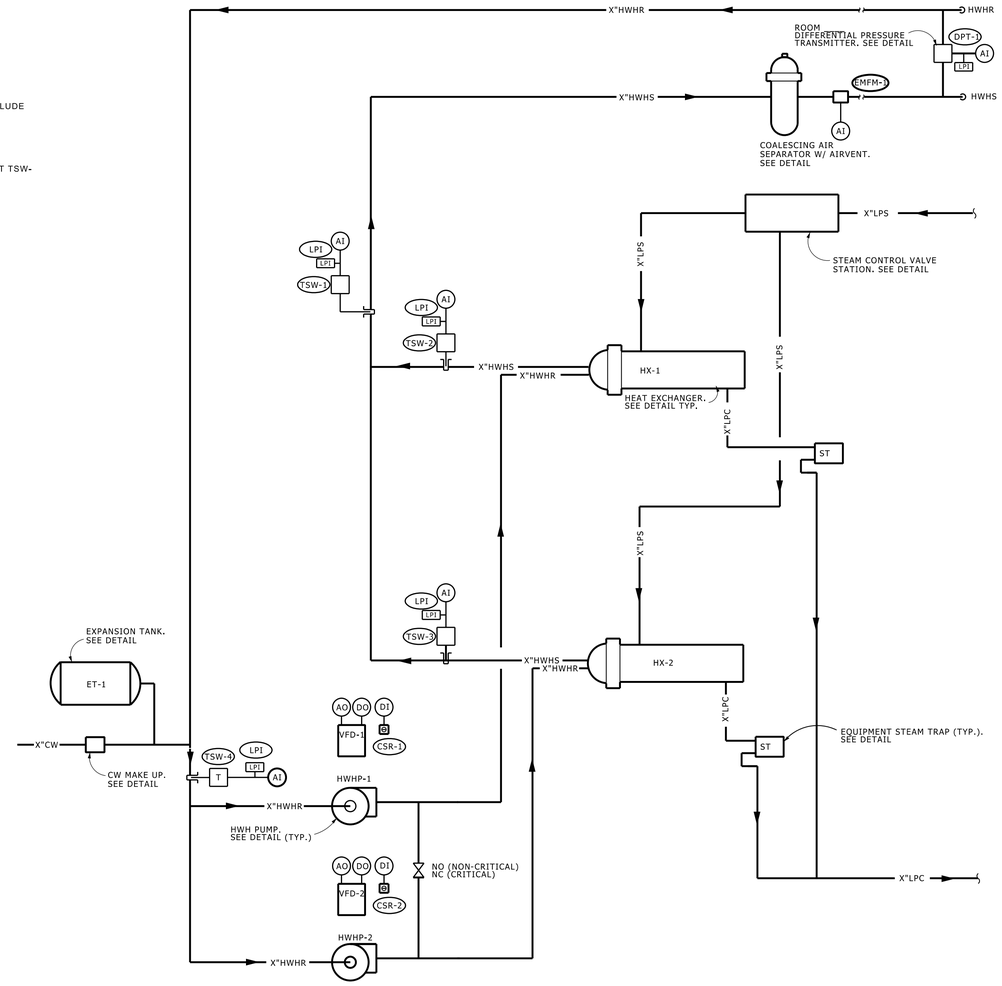

PIPING INSTRUMENTATION & CONTROL DIAGRAM

NO SCALE

UNIVERSITY OF MICHIGAN
ARCHITECTURE, ENGINEERING AND CONSTRUCTION
ARCHITECTURE & ENGINEERING
326 East Hoover, Mall Stop B
Ann Arbor, MI 48109-1002
Phone: 734-764-3414
Fax: 734-936-3334

U OF M DESIGN SUPERVISOR

APPROVED BY

REPRESENTING

DRAWN BY | DESIGN MANAGER

DESIGNED BY | REVIEWED BY

MARK	ISSUED FOR/REVISIONS	DATE
•		07.08.15

Converter Standardization Committee

Steam to Water Heat Exchanger

University Of Michigan
Ann Arbor , MI

UNIVERSITY OF MICHIGAN
ARCHITECTURE, ENGINEERING AND CONSTRUCTION
326 East Hoover, Mall Stop E
Ann Arbor, MI 48109-1002
Phone: 734-763-3020
Fax: 734-763-3238

U OF M PROJECT NO. | BLDG NO.

SHEET TITLE: **Mechanical**

Steam to Water Heat Exchangers P & I D

D 235716 001

SHEET NO. 1 OF 1 | SHEET FILE NO. D 235716 001.dgn

Q:\AES\MECH\Technical Committees\Converter Standardization Team\Converter Standardization Drawings\D 235716 001.dgn rfpan 9:27:51 AM 1/5/2016

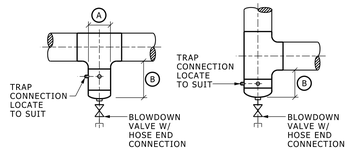

HORIZONTAL **VERTICAL**

SIZING SCHEDULE				
PIPE SIZE (IN)	A SIZE (IN)	B LENGTH (IN)	TRAP CONN. SIZE (IN)	BLOW DOWN SIZE (IN)
<4"	3"	6"	1"	1"
4"	3"	6"	1"	2"
6"	4"	9"	1"	2"
>6"	6"	11"	1"	2"

NOTES
1. USE TEE THRU 16" PIPE AND WELDOLET FOR LARGER SIZES.

STEAM DRIP LEG DETAIL

NO SCALE D 232216 02 10 04.dgn

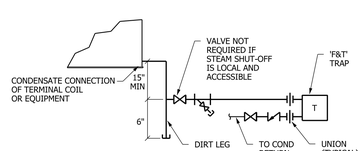

MODULATING SERVICE INSTALLATION

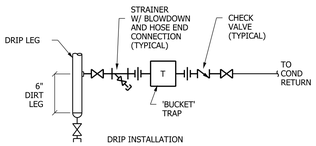

DRIP INSTALLATION

NOTES
1. FOR END OF MAIN DRIPS, PROVIDE TRAPS SIZED AT TWICE THE CONDENSATE LOAD.

STEAM TRAP ASSEMBLY DETAILS

NO SCALE D 237323 011 09 07.dgn

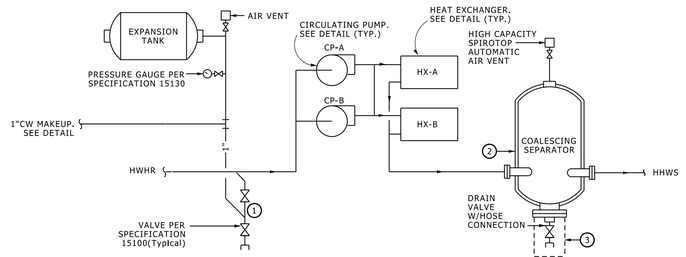

NOTES
1. CONNECT TO SIDE OF MAIN (AVOID TOP AND BOTTOM). PROVIDE ANTI-THERMO SIPHON LOOP. CONNECT TO NEW EXPANSION TANK.
2. INSULATE PER SPECIFICATIONS.
3. PROVIDE ROOM FOR SCREEN REMOVAL.

COALESCING SEPARATOR AND EXPANSION TANK DETAIL

NO SCALE

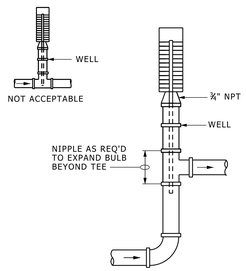

THERMOMETER INSTALLATION DETAIL

NO SCALE FOR PIPING 1" THRU 2"

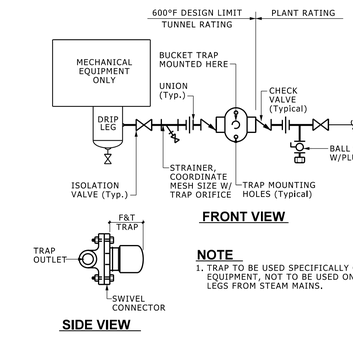

FRONT VIEW SIDE VIEW

NOTE
1. TRAP TO BE USED SPECIFICALLY ON EQUIPMENT, NOT TO BE USED ON DRIP LEGS FROM STEAM MAINS.

F&T STEAM TRAP ASSEMBLY DETAIL

NO SCALE D 232216 01 11 09.dgn

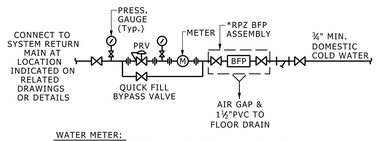

WATER METER:
BRONZE 0-50 GPM POSITIVE DISPLACEMENT WATER FLOW METER CARLTON MODEL 1000JLR.

*RPZ BFP ASSEMBLY
NOTE: ALL NEW PIPING COMPONENTS TO BE LINE SIZE TO MATCH EXISTING MAKEUP PIPING EXCEPT PRESSURE GAUGE VALVES TO BE ¼". ALL OTHER COMPONENTS PER UM STD. SPECS. PRESSURE GAUGES TO BE 0-100 PSIG.

CLOSED SYSTEM MAKE-UP DETAIL

NO SCALE D 232513 03 11 12.dgn

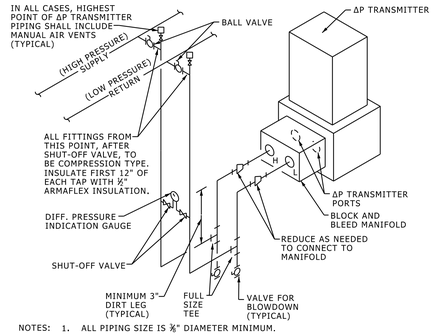

NOTES: 1. ALL PIPING SIZE IS ¾" DIAMETER MINIMUM.
2. ALL INSTRUMENTATION PIPING TO BE FURNISHED AND INSTALLED BY CONTROLS CONTRACTOR

DIFFERENTIAL PRESSURE TRANSMITTER INSTALLATION DETAIL (LIQUID)

NO SCALE D 230900 001 06 06

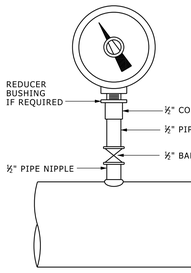

PRESSURE GAUGE DETAIL

NO SCALE D 220519 002 05 04.dgn

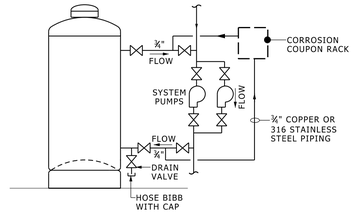

SHOT FEEDER PIPING SCHEMATIC

SHOT FEEDER:
THE FEEDER SHALL NOT BE SUPPORTED BY THE SUPPLY AND RETURN PIPING. THE FEEDER TOP OPENING SHALL NOT BE MORE THAN 48 INCHES ABOVE THE FLOOR TO AVOID ANY SPLASHING OF CHEMICALS ON THE OPERATOR.

PIPING:
PIPE SHOT FEEDER & COUPON RACK SO SUPPLY AND RETURN CONNECTIONS ARE COMMON TO ALL SYSTEM PUMPS.

CLOSED SYSTEM SHOT FEEDER DETAIL

NO SCALE D 15189 01 10 12.dgn

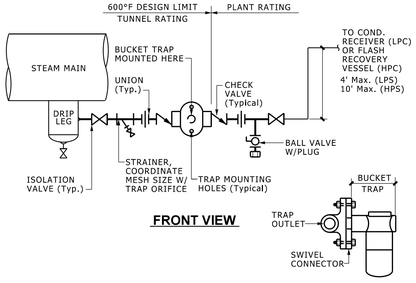

FRONT VIEW SIDE VIEW

BUCKET STEAM TRAP ASSEMBLY DETAIL

NO SCALE D 232216 05 11 09.dgn

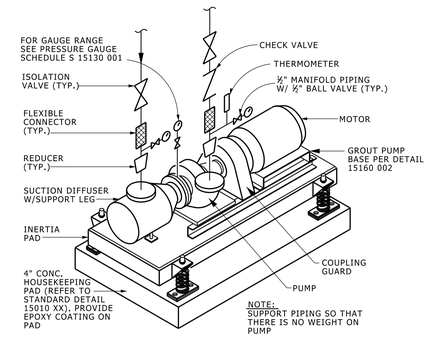

NOTE:
SUPPORT PIPING SO THAT THERE IS NO WEIGHT ON PUMP

END SUCTION PUMP INSTALLATION DETAIL

NO SCALE D 232123 006 08 09.dgn

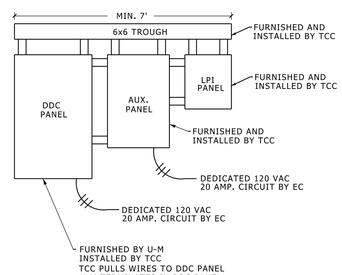

TCC = TEMPERATURE CONTROL CONTRACTOR
EC = ELECTRICAL CONTRACTOR
U-M = UNIVERSITY OF MICHIGAN

TYPICAL DDC PANEL ASSEMBLY

NO SCALE D 230900 002 06 06

STEAM TO HOT WATER CONVERTER SCHEDULE

MARK	ROOM NO. & NAME	SERVICE	HEAT TRANSFER (MBH)	TUBE SIDE FLOW (GPM)	PRESSURE (PSI) INLET	PRESSURE (PSI) ΔP	TEMP (°F) EWT	TEMP (°F) LWT	CONNECTION SIZE (IN)	NUMBER OF PASSES	FLUID TYPE	SHELL SIDE FLOW (LB/HR)	INLET PRESSURE (PSI)	MAX. DIA. (IN)	STEAM CONNECTION SIZE (IN)	CONDENSATE CONNECTION SIZE (IN)	% PEAK DIVERSIFIED LOAD	MAX. OVERALL LENGTH (FT)	BASED ON MANUFACTURER/MODEL	REMARKS
HX-1																				
HX-2																				

PUMP SCHEDULE

MARK	ROOM NO. & NAME	SERVICE	EMERGENCY POWER YES/NO	TYPE	FLOW (GPM)	HEAD (FT)	CONNECTIONS DISCH (IN)	CONNECTIONS SUCTION (IN)	MOTOR REQUIREMENTS HP	VOLTS	PHASE	RPM	% PEAK DIVERSIFIED FLOW	BASED ON MANUFACTURER/MODEL	REMARKS
HWHP-1															
HWHP-2															

VARIABLE FREQUENCY DRIVE SCHEDULE

MARK	SERVICE	HP	VOLTS	PHASE	BY PASS				SHORT CIRCUIT RATING (KA)
VFD-1									
VFD-2									

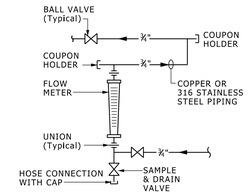

CORROSION COUPON RACK

UNIVERSITY OF MICHIGAN
ARCHITECTURE, ENGINEERING AND CONSTRUCTION
ARCHITECTURE & ENGINEERING
326 East Hoover, Mail Stop B
Ann Arbor, MI 48109-1002
Phone: 734-764-3414
Fax: 734-936-3334

U OF M DESIGN SUPERVISOR

APPROVED BY

REPRESENTING

DRAWN BY DESIGN MANAGER

DESIGNED BY REVIEWED BY

MARK	ISSUED FOR/REVISIONS	DATE
1		07.08.15

Converter Standardization Committee

Steam to Water Heat Exchanger

University Of Michigan
Ann Arbor , MI

UNIVERSITY OF MICHIGAN
ARCHITECTURE, ENGINEERING AND CONSTRUCTION
326 East Hoover, Mail Stop E
Ann Arbor, MI 48109-1002
Phone: 734-763-3020
Fax: 734-763-3238

U OF M PROJECT NO. BLDG NO.

SHEET TITLE **Mechanical**

Steam to Water Heat Exchanger Details & Schedules

D 235716 002

SHEET NO. 1 OF 1 SHEET FILE NO. D 235716 002.dgn

Q:\AES\MECH\Technical Committees\Converter Standardization Team\Converter Standardization Drawings\D 235716 002.dgn rfpan 1/5/2016 9:28:35 AM

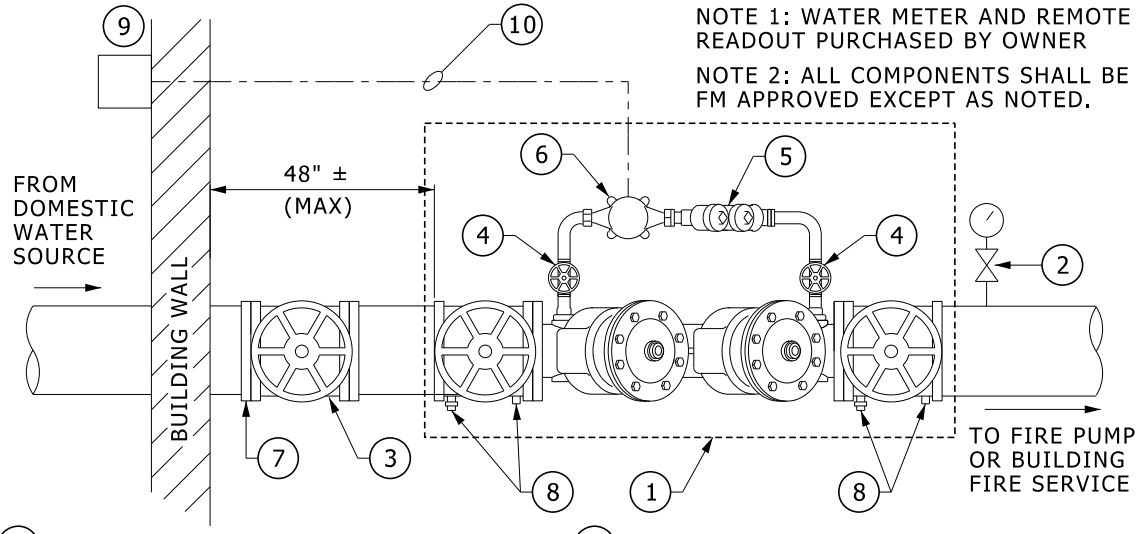

NOTE 1: WATER METER AND REMOTE READOUT PURCHASED BY OWNER

NOTE 2: ALL COMPONENTS SHALL BE FM APPROVED EXCEPT AS NOTED.

(1) U.L. AND F.M. APPROVED DOUBLE CHECK DETECTOR ASSEMBLY. PROVIDE WITH OS&Y GATE VALVES.

(2) PRESSURE GAUGE AND BALL VALVE

(3) OS&Y VALVE

(4) BALL VALVE

(5) DOUBLE CHECK VALVES

(6) U.L. LISTED AND/OR F.M. APPROVED ¾" WATER METER (OBTAINED FROM CITY OF ANN ARBOR, INSTALLED BY CONTRACTOR)

(7) TERMINATION OF DUCTILE IRON PIPE SHALL BE THREADED AND EQUIPPED WITH SCREW-ON MACHINE TIGHTENED, DUCTILE IRON FLANGE COMPLYING WITH ANSI/AWWA C110 AND C115.

(8) PROVIDE ALL CONNECTIONS, VALVES AND FITTINGS REQUIRED TO PROPERLY TEST THE BACKFLOW PREVENTION DEVICE.

(9) REMOTE READOUT (OBTAINED FROM CITY OF ANN ARBOR, INSTALLED BY CONTRACTOR).

(10) ½" EMT CONDUIT WITH 3 WIRE PHONE CABLE. CABLE FURNISHED BY CITY OF ANN ARBOR. CONTRACTOR SHALL FURNISH AND INSTALL ONDUIT AND INSTALL CABLE. CONTACT CITY FOR MAX. CABLE LENGTH.

FIRE SERVICE SYSTEM DETAIL

NO SCALE

D 15300 001 01 14.dgn

DESIGNER'S NOTE: REVISE NOTE (1) AND (5) SPECIFY A RPZ OR A DOUBLE CHECK ASSEMBLY, AS REQUIRED BY THE CITY OF ANN ARBOR BASED ON THE BUILDING HAZARD LEVEL.

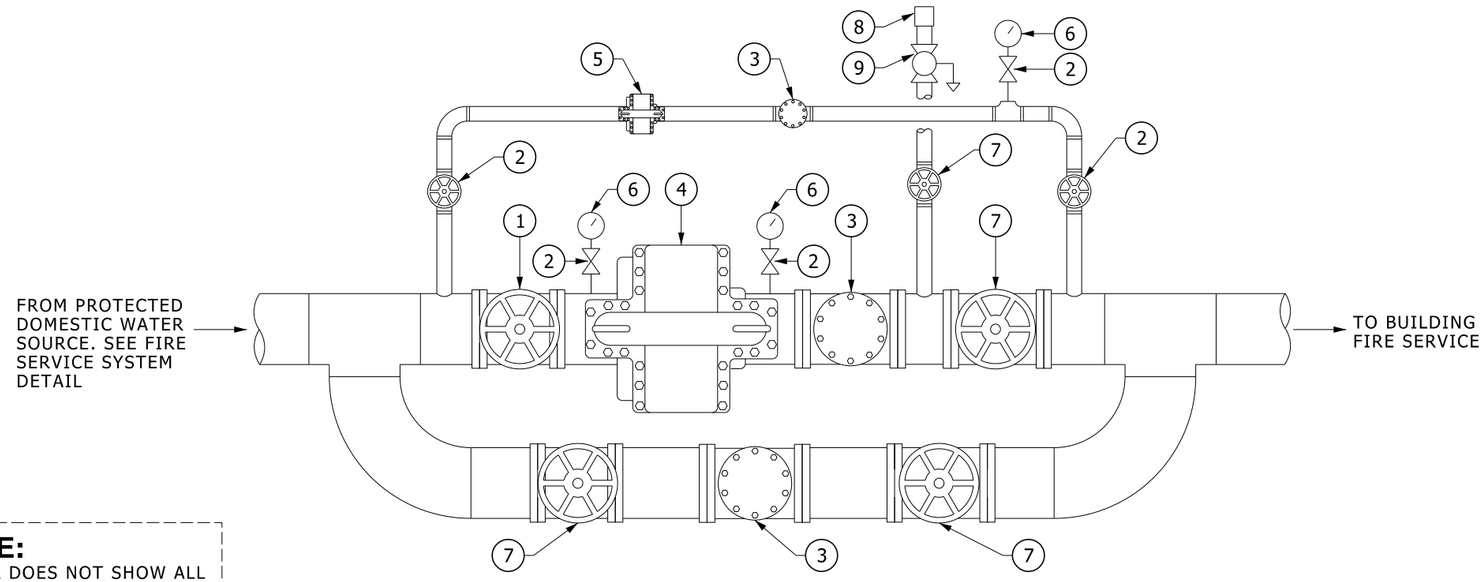

NOTE:
DETAIL DOES NOT SHOW ALL REQUIRED COMPONENTS. PROVIDE ALL PIPING AND COMPONENTS REQUIRED BY NFPA STANDARDS.

1. OS&Y GATE VALVE
2. BALL VALVE
3. CHECK VALVE
4. FIRE PUMP
5. JOCKEY PUMP
6. PRESSURE GAUGE
7. INDICATING BUTTERFLY OR OS&Y GATE VALVE
8. TEST HEADER CONNECTION HOSE VALVE MANIFOLD ASSEMBLY
9. AUTOMATIC BALL DRIP AT LOW POINT

FIRE PUMP SYSTEM DETAIL

NO SCALE (GENERAL ARRANGEMENT)

D 15320 001 03 13.dgn

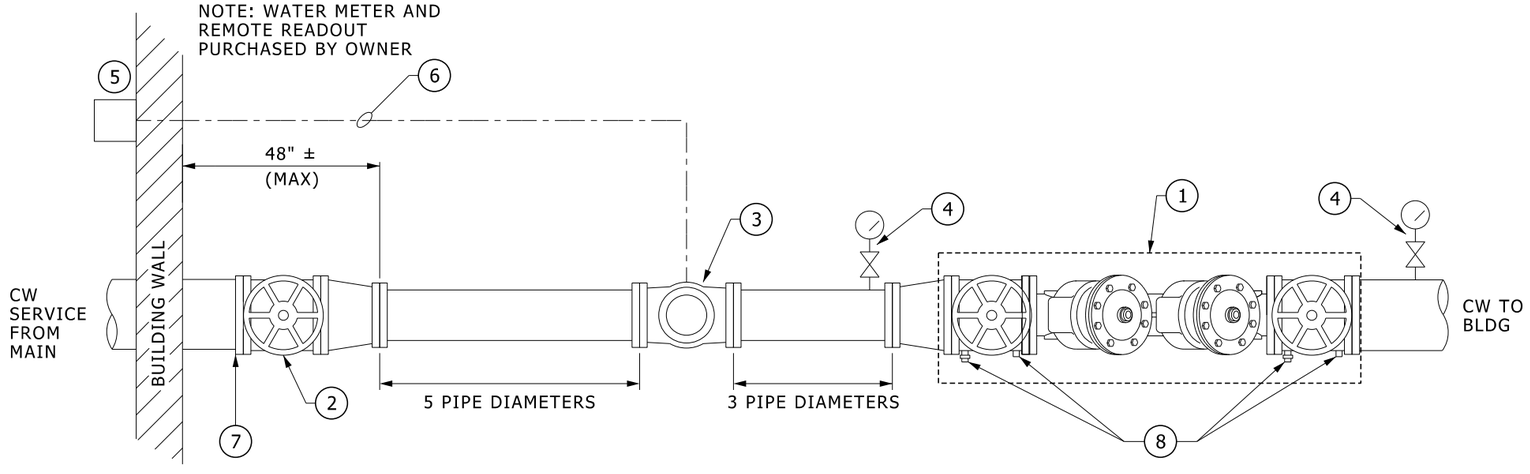

1. U.L. APPROVED DOUBLE CHECK DETECTOR ASSEMBLY OR REDUCED PRESSURE ZONE DETECTOR ASSEMBLY, AS REQUIRED BY CITY OF ANN ARBOR. PROVIDE WITH OS&Y GATE VALVES.
2. HIGH PERFORMANCE BUTTERFLY VALVE
3. WATER METER (OBTAINED FROM CITY OF ANN ARBOR, INSTALLED BY CONTRACTOR)
4. PRESSURE GAUGE AND BALL VALVE
5. REMOTE READOUT (OBTAINED FROM CITY OF ANN ARBOR, INSTALLED BY CONTRACTOR)
6. ½" EMT CONDUIT WITH 3 WIRE PHONE CABLE. CABLE FURNISHED BY CITY OF ANN ARBOR. CONTRACTOR SHALL FURNISH AND INSTALL CONDUIT AND INSTALL CABLE. CONTACT CITY FOR MAX. CABLE LENGTH.
7. TERMINATION OF DUCTILE IRON PIPE SHALL BE THREADED AND EQUIPPED WITH SCREW-ON MACHINE TIGHTENED, DUCTILE IRON FLANGE COMPLYING WITH ANSI/AWWA C110 AND C115.
8. PROVIDE ALL CONNECTIONS, VALVES AND FITTINGS REQUIRED TO PROPERLY TEST THE BACKFLOW PREVENTION DEVICE.

DOMESTIC WATER SERVICE SYSTEM DETAIL

NO SCALE

D 15411 001 03 13.dgn

DESIGNER'S NOTE: REVISE NOTE (1) TO SPECIFY A RPZ OR A DOUBLE CHECK ASSEMBLY, AS REQUIRED BY THE CITY OF ANN ARBOR BASED ON THE BUILDING HAZARD LEVEL.

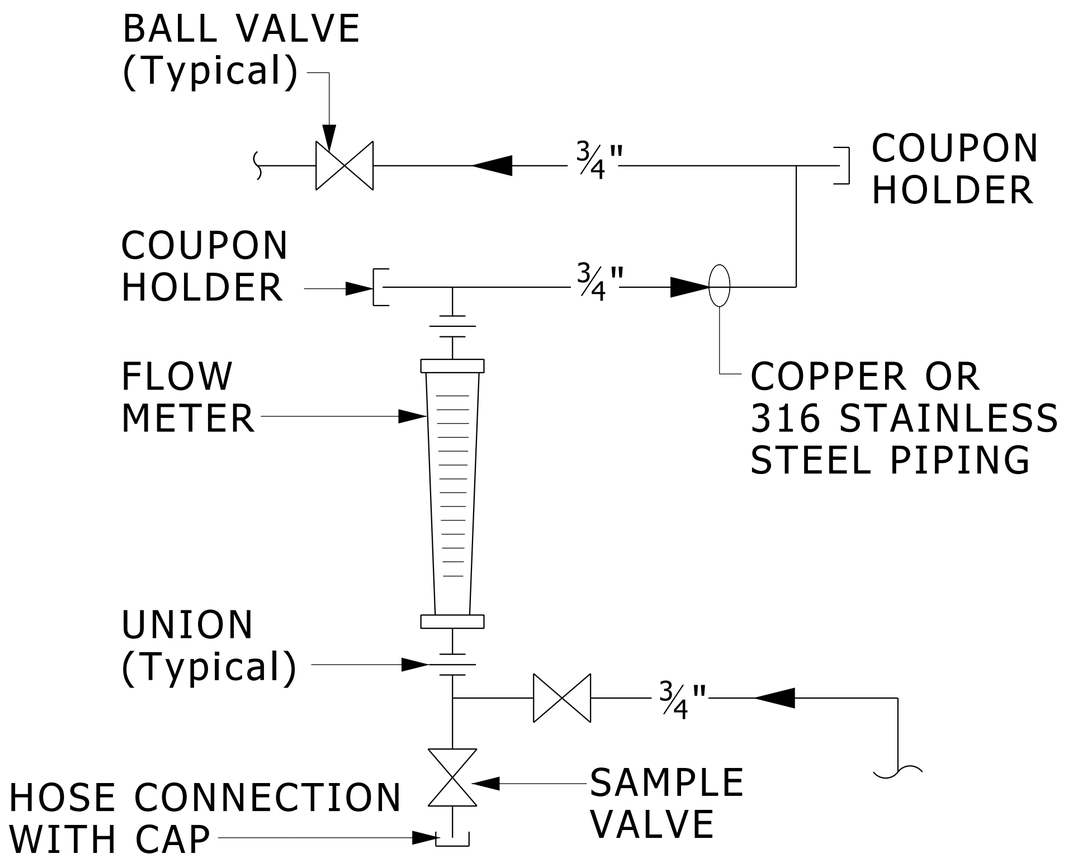

CORROSION COUPON RACK

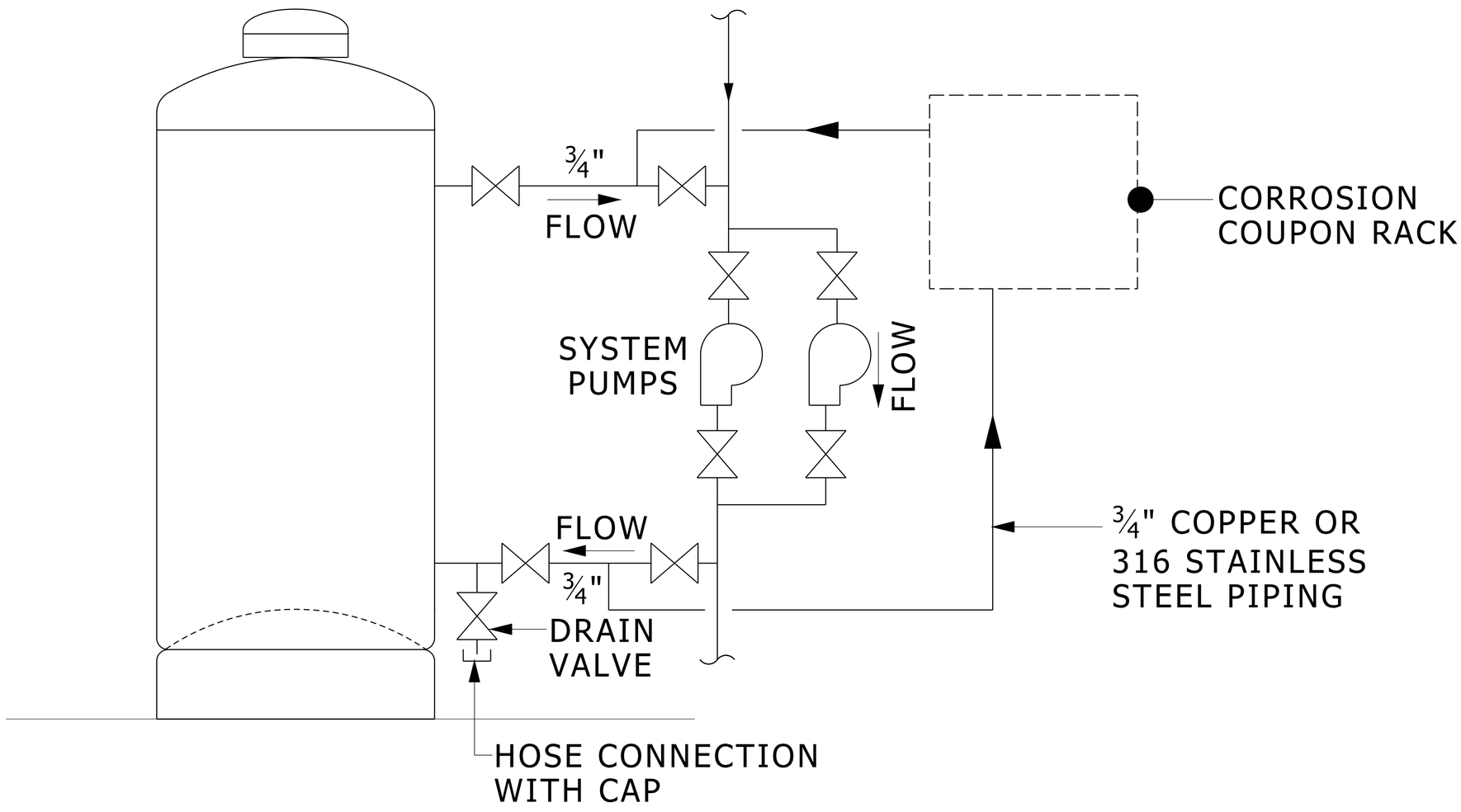

SHOT FEEDER PIPING SCHEMATIC

SHOT FEEDER:

THE FEEDER SHALL NOT BE SUPPORTED BY THE SUPPLY AND RETURN PIPING. THE FEEDER TOP OPENING SHALL NOT BE MORE THAN 48 INCHES ABOVE THE FLOOR TO AVOID ANY SPLASHING OF CHEMICALS ON THE OPERATOR.

PIPING:

PIPE SHOT FEEDER & COUPON RACK SO SUPPLY AND RETURN CONNECTIONS ARE COMMON TO ALL SYSTEM PUMPS.

CLOSED SYSTEM SHOT FEEDER DETAIL

NO SCALE

D 15189 2012 09 11.dgn

REFERENCED DETAILS/SCHEDULES:

ADDITIONAL INFORMATION:

UNIVERSITY OF MICHIGAN
ARCHITECTURE, ENGINEERING AND CONSTRUCTION

ARCHITECTURE & ENGINEERING
326 East Hoover, Mail Stop B
Ann Arbor, MI 48109-1002
Phone: 734-764-3414
Fax: 734-936-3334

Closed System
Shot Feeder Detail

DIVISION: 15
SECTION: 15189
FILE: D15189001 2012 09 11.dgn
ISSUE DATE: 07/05/04

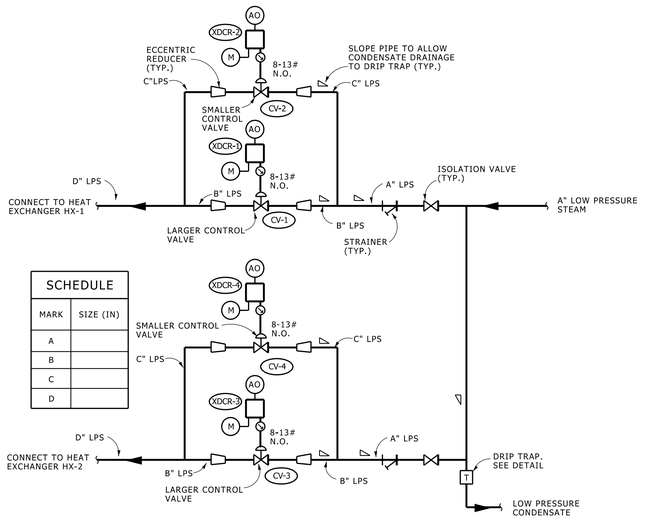

CRITICAL HEAT EXCHANGER STEAM CONTROL STATION DETAIL

NO SCALE

CRITICAL HEAT EXCHANGER SYSTEM

DESIGN INTENT:

EACH HEAT EXCHANGER, STEAM CONTROL VALVE STATION, AND PUMP ARE SIZED TO HANDLE APPROXIMATELY <FILL IN PERCENT> OF THE PEAK DIVERSIFIED HWH LOAD.

ONE HEAT EXCHANGER, ONE STEAM CONTROL VALVE STATION, OR ONE PUMP CAN BE OUT OF SERVICE WHILE MEETING THE PEAK DIVERSIFIED HWH LOAD.

MINIMUM <FILL IN GPM> HWH FLOW IS ATTAINED BY <BYPASS? THREE-WAY VALVES? INCLUDE IN SEQUENCE IF REQUIRED.>

SEQUENCE OF OPERATION:

SUMMARY

1. ONE PUMP AND ONE HEAT EXCHANGER WILL OPERATE WHILE THE OTHER PUMP AND HEAT EXCHANGER ARE IDLE.
2. BOTH PUMPS AND BOTH HEAT EXCHANGERS SHALL HAVE THEIR MANUAL ISOLATION VALVES OPEN.
3. THE MANUAL VALVE IN THE COMMON PUMP CROSS-OVER HEADER SHALL BE CLOSED.
4. THE SYSTEM SHALL OPERATE CONTINUOUSLY.
5. THE DDC SHALL SEQUENTIALLY CONTROL THE STEAM VALVES OF THE LEAD HEAT EXCHANGER TO ACHIEVE THE SUPPLY WATER SETPOINT AT THE HEAT EXCHANGER'S LEAVING TEMPERATURE SENSOR. THE SPEED OF THE ASSOCIATED LEAD PUMP SHALL BE MODULATED TO ACHIEVE DPT-1 SETPOINT.
6. THE DDC SHALL ROTATE TO THE OTHER HEAT EXCHANGER/PUMP SET IF THE DIFFERENTIAL PRESSURE OR TEMPERATURE SETPOINT CAN'T BE MAINTAINED.

DETAILED SEQUENCE

7.ROTATING HEAT EXCHANGER OPERATION

A. EACH HEAT EXCHANGER, STEAM CONTROL VALVE STATION, AND PUMP SHALL BE ROTATED WEEKLY IN OR OUT OF SERVICE BY THE DDC TO EQUALIZE RUN TIME. HEAT EXCHANGER ROTATION SHALL ALSO OCCUR WHEN INITIATED BY AN OPERATING CONDITION DESCRIBED IN OTHER SEQUENCE PARAGRAPHS.
B. TO ROTATE OPERATION, DDC SHALL FIRST START THE LAG PUMP. THE SPEED OF THE LAG PUMP WILL RAMP UP GRADUALLY (AS SET IN THE VFD) UNTIL IT MATCHES THE LEAD PUMP'S SPEED AND THEN THE SPEED OF BOTH PUMPS WILL BE CONTROLLED TO MAINTAIN THE DPT-1 SETPOINT. THE DDC SHALL CONTROL THE LAG HX STEAM VALVES TO MAINTAIN THE CURRENT HWH SETPOINT BY CONTROLLING TO THE LAG HX'S RESPECTIVE DISCHARGE TEMPERATURE TRANSMITTER (TSW-2 OR TSW-3). AFTER A 5 MINUTE TIME DELAY (ADJ) TO ALLOW THE LAG HEAT EXCHANGER TEMPERATURE CONTROL TO STABILIZE, DDC SHALL CLOSE THE LEAD HX'S STEAM VALVES. 5 MINUTES LATER, LEAD PUMP SHALL STOP.
C. AFTER THE 5 MINUTE TIME DELAY (ADJ), IF DPT-1 IS NOT WITHIN 2PSI OF SETPOINT OR THE LEAVING WATER TEMPERATURE AT THE LAG HX TRANSMITTER IS NOT WITHIN ±10°F OF SETPOINT DDC SHALL ALARM AND SWITCH BACK TO LEAD HEAT EXCHANGER OPERATION.

8. STEAM VALVE CONTROL

A. THE DDC SHALL SEQUENTIALLY MODULATE THE STEAM CONTROL VALVES OF THE OPERATING HEAT EXCHANGER TO PRODUCE THE REQUIRED SETPOINT AT THE HX'S RESPECTIVE LEAVING TEMPERATURE TRANSMITTER TSW-2 OR TSW-3. THE SETPOINT CHANGES BASED ON THE INDICATED RESET SCHEDULE.
B. UPON AN INCREASE IN LOAD, FIRST MODULATE OPEN THE SMALLEST CONTROL VALVE. UPON CONTINUED INCREASE IN LOAD, MODULATE OPEN THE NEXT LARGER CONTROL VALVE. UPON A DECREASE IN LOAD, THE OPPOSITE SHALL OCCUR, FIRST MODULATING CLOSED THE LARGEST CONTROL VALVE.
C. IF THE SETPOINT VARIES MORE THAN ±10°F FROM SETPOINT, AFTER TIME DELAY, DDC SHALL ROTATE HEAT EXCHANGER OPERATION. DDC SHALL ALSO ALARM AT BAS. ALARM MESSAGE SHALL STATE "ROTATING TO BACK-UP HX DUE TO TEMPERATURE PROBLEM. INVESTIGATE CAUSE OF CRITICAL HX PROBLEM." AFTER THE HX ROTATION AND A TIME DELAY IF THE WATER TEMPERATURE SETPOINT IS NOT ACHIEVED, THE DDC SHALL GENERATE AN ALARM MESSAGE AT BAS "HX ROTATED, TEMPERATURE STILL NOT AT SETPOINT".
D. IF THE TEMPERATURE AT THE OPERATING HX'S RESPECTIVE LEAVING TEMPERATURE TRANSMITTER EXCEEDS 220°F, DDC SHALL ALARM AT BAS (NO TIME DELAY).

9. PUMP CONTROL

A. THE MINIMUM PUMP OPERATING SPEED (PROGRAMMED INTO THE VFD) SHALL BE 12HZ.
B. DDC SHALL MODULATE THE PUMP VFD AS REQUIRED TO MEET THE DIFFERENTIAL PRESSURE SETPOINT AT DPT-1. THE INITIAL SETPOINT SHALL BE <FILL IN PSI> PSI. THE FINAL SETPOINT SHALL BE DETERMINED WITH THE WATER BALANCER DURING TEST AND BALANCE.
C. (DPT-1 SETPOINT CHANGES TO MAINTAIN WORST CASE TERMINAL VALVE AT 90% OF FULL OPENING. DESIGNER TO EXPAND UPON THIS PART OF THE SEQUENCE IF THE DPT-1 SETPOINT IS TO BE RESET IN SOME WAY.)
D. IF DPT-1 FALLS MORE THAN 2 PSI BELOW SETPOINT AFTER A TIME DELAY, DDC SHALL ROTATE HEAT EXCHANGER OPERATION. DDC SHALL ALSO ALARM AT BAS. ALARM MESSAGE SHALL STATE "ROTATING TO BACK-UP HX DUE TO PRESSURE PROBLEM. INVESTIGATE CAUSE OF CRITICAL HX PROBLEM." AFTER THE HX ROTATION AND A TIME DELAY IF THE DPT-1 SETPOINT IS NOT ACHIEVED, THE DDC SHALL GENERATE AN ALARM MESSAGE AT BAS "HX ROTATED, DP STILL NOT AT SETPOINT".

10. ADDITIONAL BAS DDC ALARMS (AFTER AN APPROPRIATE TIME DELAY)

A. PUMP STATUS DOES NOT MATCH DDC COMMAND (AS DETECTED BY CSR)
B. DPT-1 MORE THAN 5 PSI ABOVE SETPOINT

11. BAS TREND LOGGING:

A. BTU/HR, 30 MINUTE READING (EMFM-1, TSW-1, TSW-4)
B. HWH GPM, 30 MINUTE READING (EMFM-1)
C. TSW-1, 2, 3, 4, 30 MINUTE READING
D. PUMP TOTAL RUN TIME, EACH PUMP

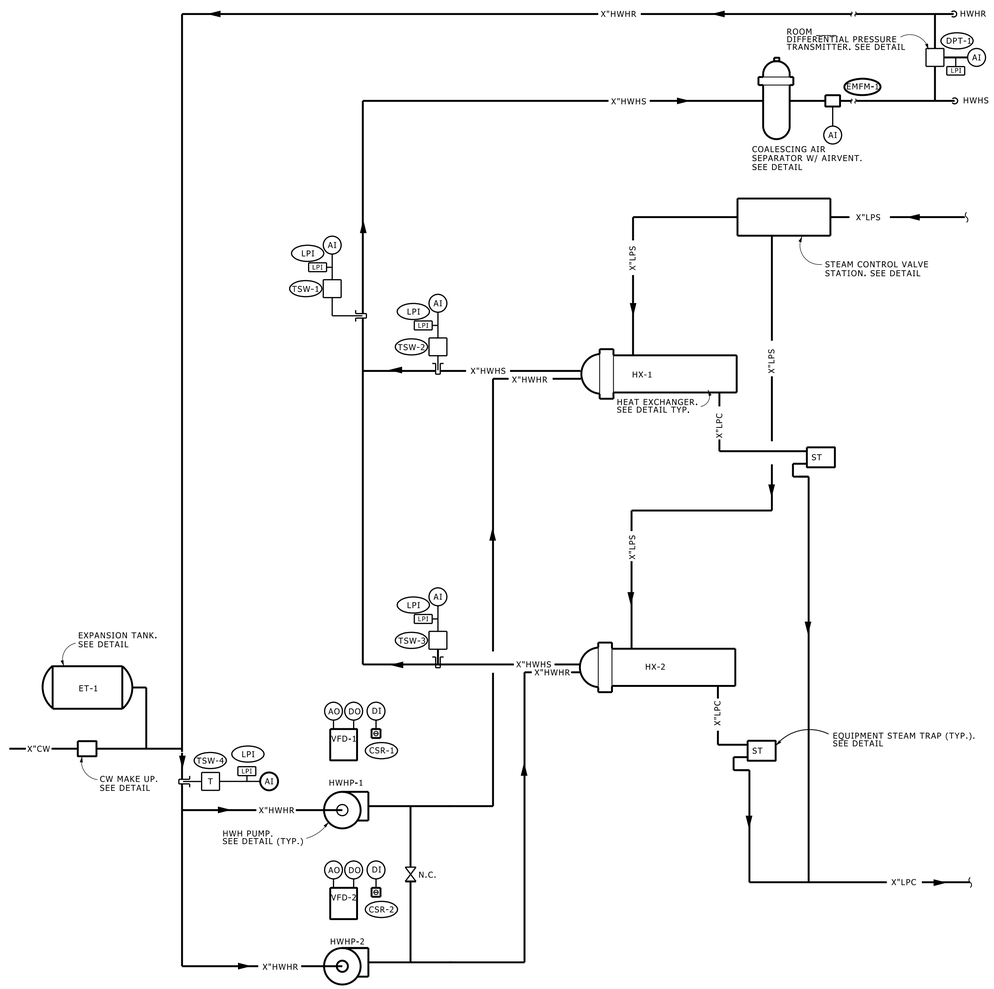

CRITICAL STEAM TO WATER HEAT EXCHANGER P & ID

NO SCALE

CONTROLS EQUIPMENT LIST	
ITEM NO.	DESCRIPTION
DPT	DIFF. PRESSURE TRANSMITTER
XDCR	E/P TRANSDUCER
CV	CONTROL VALVE
TSW *	TEMPERATURE SENSOR, WATER
EMFM	ELECTROMAGNETIC FLOW METER
CSR	CURRENT SENSING RELAY
LPI	LOOP POWERED INDICATOR

* TSW1 & TSW4 ARE HIGH PRECISION MATCHED TEMPERATURE SENSOR ASSEMBLIES FOR BTU MEASUREMENT.

RESET SCHEDULE	
OA TEMP (DEG. F)	HWH SUPPLY TEMP (DEG. F)
>65	
65	
55	
0	

NOTES:

1. ALL REQUIRED COMPONENTS AND ACCESSORIES ARE NOT IDENTIFIED. REFER TO CONSTRUCTION DOCUMENTS, INCLUDING PLANS, ELEVATIONS, DETAILS AND SPECIFICATIONS, FOR ADDITIONAL REQUIREMENTS.

DESIGNER NOTES:

1. COMPLETE ALL MISSING INFORMATION.
2. REVIEW STEAM TO WATER HEAT EXCHANGER SYSTEM DESIGN GUIDELINE DG 235716 AND MASTER SPECIFICATION MS 235716 FOR ADDITIONAL INFORMATION.

UNIVERSITY OF MICHIGAN
ARCHITECTURE, ENGINEERING AND CONSTRUCTION
ARCHITECTURE & ENGINEERING
326 East Hoover, Mail Stop B
Ann Arbor, MI 48109-1002
Phone: 734-764-3414
Fax: 734-936-3334

U OF M DESIGN SUPERVISOR

APPROVED BY

REPRESENTING

DRAWN BY | DESIGN MANAGER

DESIGNED BY | REVIEWED BY

MARK	ISSUED FOR/REVISIONS	DATE
		07.08.15

Converter Standardization Committee

Steam to Water Heat Exchanger

University Of Michigan Ann Arbor , MI

UNIVERSITY OF MICHIGAN
ARCHITECTURE, ENGINEERING AND CONSTRUCTION
326 East Hoover, Mail Stop E
Ann Arbor, MI 48109-1002
Phone: 734-763-3020
Fax: 734-763-3238

U OF M PROJECT NO. | BLDG NO.

SHEET TITLE **Mechanical**

Steam to Water Heat Exchangers P & ID - Critical

MD 235716 001

SHEET NO. 1 OF 1 SHEET FILE NO. MD 235716 001.dgn

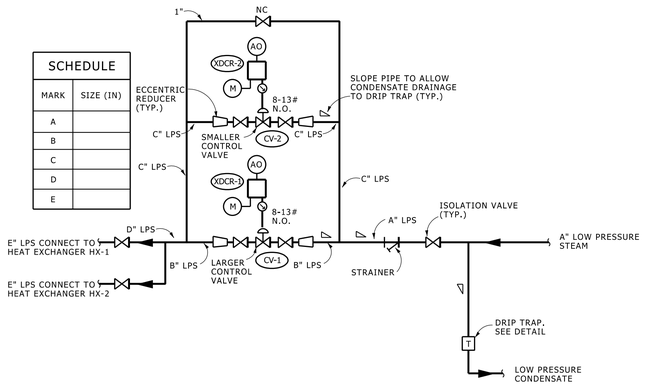

NON CRITICAL HEAT EXCHANGER STEAM CONTROL STATION DETAIL

NO SCALE

NON-CRITICAL HEAT EXCHANGER SYSTEM

DESIGN INTENT:

EACH HEAT EXCHANGER, STEAM CONTROL VALVE STATION, AND PUMP ARE SIZED TO HANDLE APPROXIMATELY <FILL IN PERCENT> OF THE PEAK DIVERSIFIED HWH LOAD.

ALL HEAT EXCHANGERS, STEAM CONTROL VALVES, AND PUMPS MUST BE IN SERVICE TO MEET THE PEAK DIVERSIFIED HWH LOAD.

HWH FLOWS PROPORTIONALLY AND CONTINUOUSLY THROUGH ALL HEAT EXCHANGERS.

MINIMUM <FILL IN GPM> HWH FLOW IS ATTAINED BY <BYPASS? THREE-WAY VALVES? INCLUDE IN SEQUENCE IF REQUIRED>

SEQUENCE OF OPERATION:

SUMMARY

1. ALL PUMPS AND HEAT EXCHANGERS WILL OPERATE.
2. ALL PUMPS AND HEAT EXCHANGERS SHALL HAVE THEIR MANUAL ISOLATION VALVES OPEN.
3. THE MANUAL VALVE IN THE COMMON PUMP CROSS-OVER HEADER SHALL BE OPEN.
4. THE MANUAL BYPASS VALVE AT THE STEAM CONTROL VALVES SHALL BE CLOSED.
5. THE SYSTEM SHALL OPERATE CONTINUOUSLY, OR BE SCHEDULED OFF AND ON AS DESCRIBED BELOW.
6. THE DDC SHALL SEQUENTIALLY CONTROL THE STEAM VALVE STATION (WHICH IS COMMON TO ALL HEAT EXCHANGERS) TO ACHIEVE THE SUPPLY WATER SETPOINT AT TSW-1 .
7. THE PUMPS SHALL BE CONTROLLED IN SEQUENCE TO ACHIEVE THE DPT-1 SETPOINT BY CONTROLLING PUMP SPEEDS.

DETAILED SEQUENCE

1. SYSTEM SHALL (OPERATE CONTINUOUSLY, AUTOMATICALLY START WHEN <DESIGNER TO COMPLETE THE SEQUENCE>.
2. ROTATING PUMP ORIENTATION
   - A. EACH PUMP SHALL BE ROTATED WEEKLY IN OR OUT OF SERVICE BY DDC TO EQUALIZE RUN TIME. PUMP ROTATION SHALL ALSO OCCUR WHEN INITIATED BY AN OPERATING CONDITION DESCRIBED IN OTHER SEQUENCE PARAGRAPHS.
   - B. TO ROTATE OPERATION, DDC SHALL FIRST START THE LAG PUMP. THE SPEED OF THE LAG PUMP WILL RAMP UP GRADUALLY (AS SET IN THE VFD) UNTIL IT MATCHES THE LEAD PUMP'S SPEED. AFTER A ONE MINUTE TIME DELAY (ADJ), DDC SHALL STOP THE LEAD PUMP. THE LAG PUMP WILL CONTINUE TO OPERATE AND BE CONSIDERED THE LEAD PUMP.
3. STEAM VALVE CONTROL
   - A. THE DDC SHALL SEQUENTIALLY MODULATE THE STEAM CONTROL VALVES TO PRODUCE THE REQUIRED SETPOINT AT TSW-1. THE TSW-1 SETPOINT CHANGES BASED ON THE INDICATED RESET SCHEDULE.
   - B. UPON AN INCREASE IN LOAD, FIRST MODULATE OPEN THE SMALLEST CONTROL VALVE. UPON CONTINUED INCREASE IN LOAD, MODULATE OPEN THE NEXT LARGER CONTROL VALVE. UPON A DECREASE IN LOAD, THE OPPOSITE SHALL OCCUR, FIRST MODULATING CLOSED THE LARGEST CONTROL VALVE.
   - C. IF TSW-1 IS ±10°F FROM SETPOINT AFTER TIME DELAY, DDC SHALL ALARM A FAULT.
   - D. IF THE TEMPERATURE AT TSW-1 TEMPERATURE TRANSMITTER EXCEEDS 220°F, DDC SHALL ALARM AT BAS (NO TIME DELAY).
4. PUMP CONTROL
   - A. THE MINIMUM PUMP OPERATING SPEED (PROGRAMMED INTO THE VFD) SHALL BE 12HZ.
   - B. DDC SHALL MODULATE THE LEAD AND LAG PUMP VFD IN SEQUENCE AS REQUIRED TO MEET THE DIFFERENTIAL PRESSURE SETPOINT AT DPT-1. THE INITIAL SETPOINT SHALL BE (FILL IN PSI). THE FINAL SETPOINT SHALL BE DETERMINED WITH THE WATER BALANCER DURING TEST AND BALANCE.
   - C. (DPT-1 SETPOINT CHANGES TO MAINTAIN WORST CASE TERMINAL VALVE AT 90% OF FULL OPENING DESIGNER TO EXPAND UPON THIS PART OF THE SEQUENCE IF THE DPT-1 SETPOINT IS TO BE RESET IN SOME WAY.)
   - D. IF DPT-1 FALLS TO 2 PSI BELOW SETPOINT FOR 5 MINUTES (ADJUSTABLE), OR IF LEAD PUMP IS OPERATING AT 50 HZ OR GREATER FOR 5 MINUTES (ADJUSTABLE), DDC SHALL START THE LAG PUMP. DDC SHALL MODULATE BOTH PUMPS AT EQUAL SPEEDS TO MEET THE DPT-1 SETPOINT.
   - E. DURING OPERATION OF BOTH PUMPS, WHEN THE FLOW RATE FALLS BELOW <DESIGNER TO FILL IN FLOW RATE, TYPICALLY HALF OF DESIGN FLOW RATE> GPM FOR 5 MINUTES (ADJUSTABLE), DDC SHALL GRADUALLY DECREASE THE LAG PUMP SPEED UNTIL IT REACHES MINIMUM SPEED. THEN, LAG PUMP SHALL STOP.
   - F. IF DPT-1 FALLS MORE THAN 2 PSI BELOW SETPOINT AFTER A 10 MINUTE (ADJ) TIME DELAY, DDC SHALL ALARM A FAULT.
5. ADDITIONAL BAS DDC ALARMS (AFTER AN APPROPRIATE TIME DELAY)
   - A. PUMP STATUS DOES NOT MATCH DDC COMMAND (AS DETECTED BY CSR)
6. BAS TREND LOGGING:
   - A. BTU/HR, 30 MINUTE READING (EMFM-1, TSW-1, TSW-4)
   - B. HWH GPM, 30 MINUTE READING (EMFM-1)
   - C. TSW-1, 2, 3, 4, 30 MINUTE READING
   - D. PUMP TOTAL RUN TIME, EACH PUMP

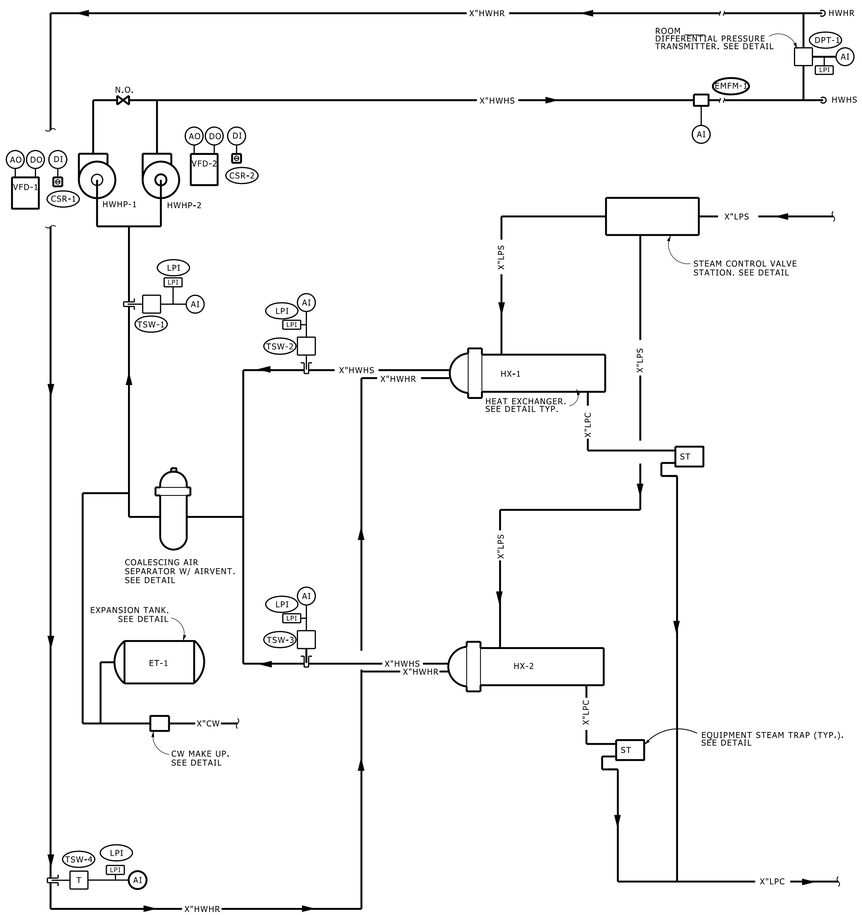

NON-CRITICAL STEAM TO WATER HEAT EXCHANGER P & ID

NO SCALE

CONTROLS EQUIPMENT LIST	
ITEM NO.	DESCRIPTION
DPT	DIFF. PRESSURE TRANSMITTER
XDCR	E/P TRANSDUCER
CV	CONTROL VALVE
TSW *	TEMPERATURE SENSOR, WATER
EMFM	ELECTROMAGNETIC FLOW METER
CSR	CURRENT SENSING RELAY
LPI	LOOP POWERED INDICATOR

* TSW1 & TSW4 ARE HIGH PRECISION MATCHED TEMPERATURE SENSOR ASSEMBLIES FOR BTU MEASUREMENT.

RESET SCHEDULE	
OA TEMP (DEG. F)	HWH SUPPLY TEMP (DEG. F)
>65	
65	
55	
0	

NOTES:

1. ALL REQUIRED COMPONENTS AND ACCESSORIES ARE NOT IDENTIFIED. REFER TO CONSTRUCTION DOCUMENTS, INCLUDING PLANS, ELEVATIONS, DETAILS AND SPECIFICATIONS, FOR ADDITIONAL REQUIREMENTS.

DESIGNER NOTES:

1. COMPLETE ALL MISSING INFORMATION.
2. REVIEW STEAM TO WATER HEAT EXCHANGER SYSTEM DESIGN GUIDELINE DG 235716 AND MASTER SPECIFICATION MS 235716 FOR ADDITIONAL INFORMATION.

UNIVERSITY OF MICHIGAN
ARCHITECTURE, ENGINEERING AND CONSTRUCTION
ARCHITECTURE & ENGINEERING
326 East Hoover, Mall Stop B
Ann Arbor, MI 48109-1002
Phone: 734-764-3414
Fax: 734-936-3334

U OF M DESIGN SUPERVISOR

APPROVED BY

REPRESENTING

DRAWN BY | DESIGN MANAGER

DESIGNED BY | REVIEWED BY

MARK	ISSUED FOR/REVISIONS	DATE
		07.08.15

Converter Standardization Committee

Steam to Water Heat Exchanger

University Of Michigan
Ann Arbor , MI

UNIVERSITY OF MICHIGAN
ARCHITECTURE, ENGINEERING AND CONSTRUCTION
326 East Hoover, Mall Stop E
Ann Arbor, MI 48109-1002
Phone: 734-763-3020
Fax: 734-763-3238

U OF M PROJECT NO. | BLDG NO.

SHEET TITLE **Mechanical**

Steam to Water Heat Exchangers P & ID - Non-Critical

MD 235716 002

SHEET NO. 1 OF 1 SHEET FILE NO. MD 235716 002.dgn

STEAM TO HOT WATER CONVERTER SCHEDULE

MARK	ROOM NO. & NAME	SERVICE	HEAT TRANSFER (MBH)	TUBE SIDE								SHELL SIDE								
				FLOW (GPM)	PRESSURE (PSI) INLET	PRESSURE (PSI) ΔP	TEMP (°F) EWT	TEMP (°F) LWT	CONNECTION SIZE (IN)	NUMBER OF PASSES	FLUID TYPE	FLOW (LB/HR)	INLET PRESSURE (PSI)	MAX. DIA. (IN)	STEAM CONNECTION SIZE (IN)	CONDENSATE CONNECTION SIZE (IN)	% PEAK DIVERSIFIED LOAD	MAX. OVERALL LENGTH (FT)	BASED ON MANUFACTURER/MODEL	REMARKS
HX-1																				
HX-2																				

PUMP SCHEDULE

MARK	ROOM NO. & NAME	SERVICE	EMERGENCY POWER YES/NO	TYPE	FLOW (GPM)	HEAD (FT)	CONNECTIONS DISCH (IN)	CONNECTIONS SUCTION (IN)	MOTOR REQUIREMENTS HP	MOTOR REQUIREMENTS VOLTS	MOTOR REQUIREMENTS PHASE	MOTOR REQUIREMENTS RPM	% PEAK DIVERSIFIED FLOW	BASED ON MANUFACTURER/MODEL	REMARKS
HWHP-1															
HWHP-2															

VARIABLE FREQUENCY DRIVE SCHEDULE

MARK	SERVICE	HP	VOLTS	PHASE	BY PASS				SHORT CIRCUIT RATING (KA)
VFD-1									
VFD-2									

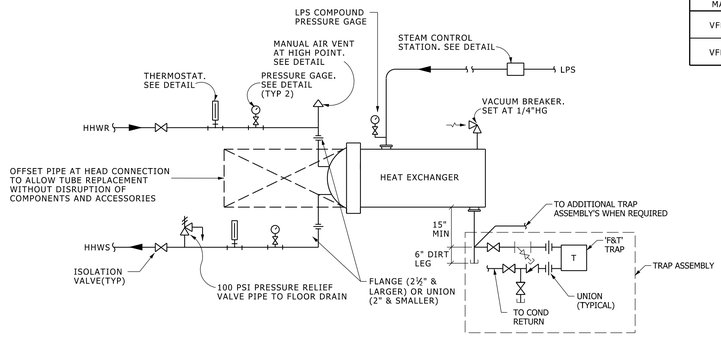

STEAM TO WATER HEAT EXCHANGER PIPING DETAIL

NO SCALE MD 235716 003 2017 02 03

UNIVERSITY OF MICHIGAN
ARCHITECTURE, ENGINEERING AND CONSTRUCTION
ARCHITECTURE & ENGINEERING
326 East Hoover, Mail Stop B
Ann Arbor, MI 48109-1002
Phone: 734-764-3414
Fax: 734-936-3334

U OF M DESIGN SUPERVISOR

APPROVED BY

REPRESENTING

DRAWN BY | DESIGN MANAGER

DESIGNED BY | REVIEWED BY

MARK	ISSUED FOR/REVISIONS	DATE
	.	07.08.15

Converter Standardization Committee

Steam to Water Heat Exchanger

University Of Michigan Ann Arbor , MI

UNIVERSITY OF MICHIGAN
ARCHITECTURE, ENGINEERING AND CONSTRUCTION
326 East Hoover, Mail Stop E
Ann Arbor, MI 48109-1002
Phone: 734-763-3020
Fax: 734-763-3238

U OF M PROJECT NO. | BLDG NO.

SHEET TITLE **Mechanical**

Steam to Water Heat Exchanger Detail & Schedules

MD 235716 003

SHEET NO. 1 OF 1 SHEET FILE NO. MD 235716 003.dgn

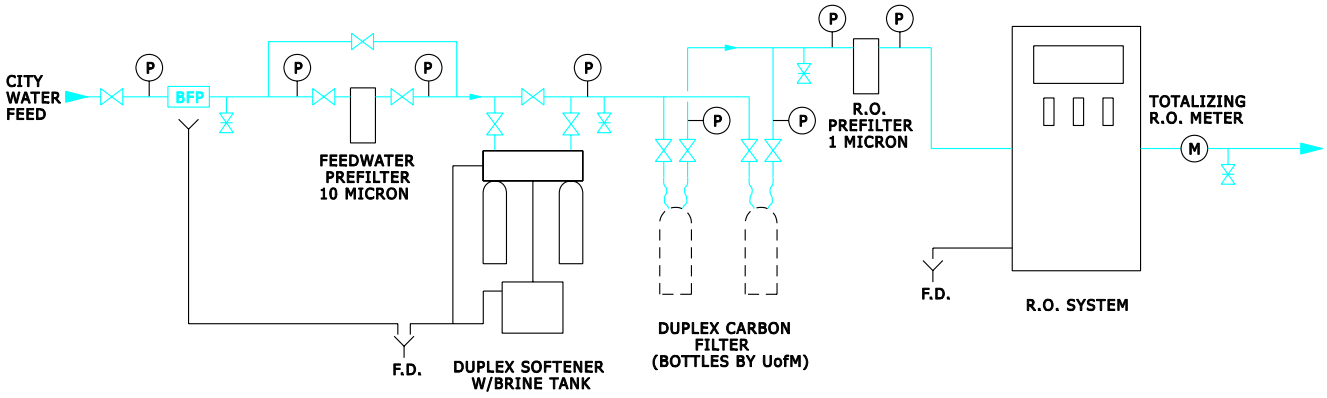

R.O. MAKE-UP SYSTEM FOR CLEAN STEAM HUMIDIFICATION SCHEMATIC

(NOT ALL REQUIRED COMPONENTS SHOWN)

SYMBOL LEGEND

⋈ = ISOLATION VALVE

⋈ = SAMPLE PORT

(P) = PRESSURE GAUGE

(T) = TEMPERATURE GAUGE

CITY WATER FEED

HX or MIXING VALVE (OPTIONAL)

BFP

FEEDWATER PREFILTER 10 MICRON

F.D.

DUPLEX SOFTENER W/BRINE TANK

DUPLEX CARBON FILTER (BOTTLES BY UofM)

R.O. PREFILTER 1 MICRON

F.D.

R.O. SYSTEM

TOTALIZING R.O. METER

MAKE-UP MIXED BED DI BOTTLES (NOT NORMALLY REQUIRED) (BOTTLES BY UofM)

RESIN TRAP (W/MAKE-UP MIXED BEDS ONLY)

RO/DI DISTRIBUTION RETURN

BACK PRESSURE REGULATOR

STORAGE TANK

RELIEF VALVE

RO/DI SUPPLY

DISTRIBUTION LOOP RESISTIVITY METER (LOCATION PER PROGRAM)

HX (OPTIONAL)

POST FILTER 0.2 MICRON

U.V. STERILIZER

DISTRIBUTION LOOP MIXED BED DI BOTTLES (BOTTLES BY UofM)

U.V. STERILIZER UPSTREAM OF DIST. MIXED BEDS (NOT NORMALLY REQUIRED)

VFD

VFD

DUPLEX DISTRIBUTION PUMPS

F.D.

SYMBOL LEGEND

= ISOLATION VALVE

= SAMPLE PORT

= QUALITY LIGHT

= PRESSURE GAUGE

= TEMPERATURE GAUGE

HIGH PURITY WATER SYSTEM SCHEMATIC

(NOT ALL REQUIRED COMPONENTS SHOWN)

EXPANSION JOINT SCHEDULE

MARK	TYPE	LOCATION SUPPORT#	SERVICE	PIPE SIZE (IN)	MAX TEMP (°F)	MIN TEMP (°F)	TRAVEL (IN)	BASED ON MANUFACTURER/ MODEL

S 15125 01 09 07.dgn

REFERENCED DETAILS/SCHEDULES:
D 15125 01 D 15125 02

ADDITIONAL INFORMATION:

MODULES: 1

UNIVERSITY OF MICHIGAN
ARCHITECTURE, ENGINEERING AND CONSTRUCTION

ARCHITECTURE & ENGINEERING
326 East Hoover, Mail Stop B
Ann Arbor, MI 48109-1002
Phone: 734-764-3414
Fax: 734-936-3334

Expansion Joint Schedule

DIVISION: 15
SECTION: 15125
FILE: S 15125 01 09 07.dgn
ISSUE DATE: 09/05/07

STEAM BOILER SCHEDULE

MARK	LOCATION	TYPE	HEATING CAP		STEAM		NATURAL GAS		CONNECTION SIZES			BOILER (HP)	HEATING SURFACE (SQ FT)	WATER CONTENT (GALLONS)	MINIMUM STEAM STORAGE (CFT)	MIN. STEAM RELEASE AREA (SQ FT)	MAX. FURNACE HEAT RELEASE RATE (BTU/CFT)	MOTOR - ELECTRICAL REQ					DESIGN BASED ON:
			INPUT (MBH)	OUTPUT (MBH)	FLOW (PPH)	PRESSURE (PSIG)	INPUT (CFH)	PRESSURE (PSIG)	GAS (IN Ø)	FLUE (IN Ø)	WATER (IN Ø)							HP	VOLTS	PHASE	RUNNING AMPS	RPM	

S 15558 001 03 04.dgn

REFERENCED DETAILS/SCHEDULES:

ADDITIONAL INFORMATION:

MODULES: 2

UNIVERSITY OF MICHIGAN
ARCHITECTURE, ENGINEERING AND CONSTRUCTION

ARCHITECTURE & ENGINEERING
326 East Hoover, Mail Stop B
Ann Arbor, MI 48109-1002
Phone: 734-764-3414
Fax: 734-936-3334

Steam Boiler Schedule

DIVISION: 15
SECTION: 15558
FILE: S 15558 001 03 04.dgn
ISSUE DATE: 03/04/05

6/20/2006 11:16:38 AM CARLOSW Q:\AES\MECH\Mech Tech Teams\Ready for Approval\hydronics & steam\S 15558 001 03 04.dgn

PREHEAT BOILER FEED UNIT AND PUMP SCHEDULE

MARK	LOCATION	TYPE	MINIMUM RECEIVER (GALLONS)	FLOW (GPM)	DISCHARGE PRESSURE (PSIG)	NPSH AVAILABLE	MOTOR - ELECTRICAL REQUIREMENTS				DESIGN BASED ON:
							HP	VOLTS	PHASE	RPM	

S 15559 001 03 04.dgn

REFERENCED DETAILS/SCHEDULES:

ADDITIONAL INFORMATION:

MODULES: 2

UNIVERSITY OF MICHIGAN
ARCHITECTURE, ENGINEERING AND CONSTRUCTION

ARCHITECTURE & ENGINEERING
326 East Hoover, Mail Stop B
Ann Arbor, MI 48109-1002
Phone: 734-764-3414
Fax: 734-936-3334

Preheat Boiler Feed Unit and Pump Schedule

DIVISION: 15
SECTION: 15559
FILE: S 15559 001 03 04.dgn
ISSUE DATE: 03/04/05

6/20/2006 11:26:57 AM CARLOSW Q:\AES\MECH\Mech Tech Teams\Ready for Approval\hydronics & steam\S 15559 001 03 04.dgn

ELECTRIC WATER COOLED CENTRIFUGAL/SCREW/SCROLL CHILLER SCHEDULE

MARK	LOCATION	SERVICE	TYPE	CAP (TONS)	REFRIG. TYPE	NPLV	COP	CHILLED WATER EWT (°F)	CHILLED WATER LWT (°F)	CHILLED WATER FLOW (GPM)	CHILLED WATER WPD (FT)	CHILLED WATER GLYCOL (% VOL)	CONDENSER WATER EWT (°F)	CONDENSER WATER LWT (°F)	CONDENSER WATER FLOW (GPM)	CONDENSER WATER WPD (FT)	ELECTRICAL REQUIREMENTS VOLTS	ELECTRICAL REQUIREMENTS HP	ELECTRICAL REQUIREMENTS kW	ELECTRICAL REQUIREMENTS FLA	STARTER TYPE	OPERATING WEIGHT (LB)	BASIS OF DESIGN MANUFACTURER/MODEL	REMARKS

REFERENCED DETAILS/SCHEDULES:

ADDITIONAL INFORMATION:

MODULES: 2

UNIVERSITY OF MICHIGAN
ARCHITECTURE, ENGINEERING AND CONSTRUCTION

ARCHITECTURE & ENGINEERING
326 East Hoover, Mail Stop B
Ann Arbor, MI 48109-1002
Phone: 734-764-3414
Fax: 734-936-3334

Electric Water Cooled Chiller Schedule

DIVISION: 15
SECTION: 15684
FILE: S 15684 001 11 12.dgn
ISSUE DATE: 11/01/12

11/1/2012 11:35:59 AM carlosw S:\Project Support\Details\Mech\15684 Centrifugal Chiller\S 15684 001 11 12.dgn

AIR COOLED CHILLER SCHEDULE

MARK	LOCATION	SERVICE	COMPRESSOR TYPE	CAP (TONS)	REFRIG. TYPE	AHRI NPLV	COP	CHILLED WATER					AIR			ELECTRICAL REQUIREMENTS				OPERATING WEIGHT (LB)	BASIS OF DESIGN MANUFACTURER/MODEL	REMARKS
								EWT (°F)	LWT (°F)	FLOW (GPM)	WPD (FT)	GLYCOL (% VOL)	FANS #	FANS HP	AMBIENT TEMP. (F°)	VOLTS	HP	kW	FLA			

REFERENCED DETAILS/SCHEDULES:

ADDITIONAL INFORMATION:

MODULES: 2

UNIVERSITY OF MICHIGAN
ARCHITECTURE, ENGINEERING AND CONSTRUCTION

ARCHITECTURE & ENGINEERING
326 East Hoover, Mail Stop B
Ann Arbor, MI 48109-1002
Phone: 734-764-3414
Fax: 734-936-3334

Air Cooled Chiller Schedule

DIVISION: 15
SECTION: 15684
FILE: S 15684 02 11 12.dgn
ISSUE DATE: 11/01/12

11/1/2012 11:38:12 AM carlosw S:\Project Support\Details\Mech\15684 Centrifugal Chiller\S 15684 002 11 12.dgn

6/20/2006 11:31:48 AM CARLOSW Q:\AES\MECH\Mech Tech Teams\Ready for Approval\hydronics & steam\S 15710 001 07 04.dgn

COOLING TOWER SCHEDULE

MARK	LOCATION	EQUIPMENT/ AREA SERVED	TYPE	DIMENSIONS (W'xL'xH')	WEIGHT (LBS)	WATER			AIR INLET WB (°F)	FAN MOTOR - ELECTRICAL REQUIREMENTS				BASED ON MANUFACTURER/MODEL	REMARKS
						FLOW (GPM)	EWT (°F)	LWT (°F)		QTY	HP	VOLTS	PHASE		
CT-1															

S 15710 001 07 04.dgn

REFERENCED DETAILS/SCHEDULES:
15710 001

ADDITIONAL INFORMATION:

MODULES:

UNIVERSITY OF MICHIGAN
ARCHITECTURE, ENGINEERING AND CONSTRUCTION

ARCHITECTURE & ENGINEERING
326 East Hoover, Mail Stop B
Ann Arbor, MI 48109-1002
Phone: 734-764-3414
Fax: 734-936-3334

Cooling Tower Schedule

DIVISION: 15
SECTION: 15710
FILE: S 15710 01 10 15.dgn
ISSUE DATE: 10/15/04

LABORATORY TERMINAL AIRFLOW UNIT SCHEDULE (1)									
LTAU NO. (2)	NAME OF ROOM SERVED	CFM		LTAU SIZE (3)	REHEAT		SOUND ATT. NO.	PRODUCT NUMBER	REMARKS
		MAX.	MIN.		NO.	GPM			
S1234	WET LAB	1100	540	10x20	RHC4	5	SA3	MAV-A	WALL MOUNTED MAC PANEL
E1234	WET LAB	650	90	12"Ø	---	---	SA2	EXV-A	
FH1234	WET LAB	550	550	10"Ø	---	---	---	CVV-B	HERESITE COATED
S1234A	WET LAB OFC	200	100	8"Ø	RHC1	1	SA1	BSV-A	
E1234A	WET LAB OFC	150	50	8"Ø	---	---	SA1	EXV-A	
S1235-1	DRY LAB	1000	500	12"Ø	RHC3	3	SA2	MAV-A	
S1235-2	DRY LAB	1000	500	12"Ø	RHC3	3	SA2	MAV-A	
E1235	DRY LAB	2100	1100	12x24	---	---	SA4	EXV-A	
S1237	ELEC. CLO.	200	35	8"Ø	---	---	---	PSV-A	
R1237	ELEC. CLO.	200	35	8"Ø	---	---	---	PEV-A	

NOTES:

1. BASIS OF DESIGN = PHOENIX LOW PRESSURE
2. LTAU NO. = ABBBB-C
   POSITION "A" = "S" FOR SUPPLY AIR
   "E" FOR EXHAUST AIR
   "R" FOR RETURN AIR
   "FH" FOR FUME HOOD EXHAUST AIR
   POSITION "BBBB" = ROOM NUMBER
   POSITION "-C" = USED WHEN MULTIPLE VALVES SERVE THE SAME SPACE
3.

LTAU SIZE	CFM RANGE		MAX. P.D. (IN. W.G.)
	MAX.	MIN.	
8"Ø	500	35	0.3
10"Ø	550	50	0.3
12"Ø	1050	90	0.3
10x20	1100	100	0.3
12x24	2100	180	0.3
12x36	3150	270	0.3
12x48	4200	360	0.3

LTAU REHEAT COIL SCHEDULE (1)									
COIL NO.	CFM RANGE		COIL SIZE	NO. OF ROWS	MAX. FPF	MAX. P.D. (IN. W.G.)	MAX. WATER P.D. (FT)	BASIS OF DESIGN	REMARKS
	MAX.	MIN.							
RHC1	500	35	8x8	1	120	0.3		HEATCRAFT	
RHC2	550	50	10x10	1	120	0.3		HEATCRAFT	
RHC3	1050	90	12x12	1	120	0.3		HEATCRAFT	
RHC4	1100	100	10x20	1	120	0.3		HEATCRAFT	
RHC5	2100	180	12x24	1	120	0.3		HEATCRAFT	
RHC6	3150	270	12x36	2	120	0.3		TRANE	
RHC7	4200	360	12x48	2	120	0.3		TRANE	

NOTES:
1. EWT=180°F/LWT=160°F
   EAT=55°F/LAT=90°F

LABORATORY TERMINAL AIRFLOW UNIT SAMPLE SCHEDULES

DATA IN TABLES IS FOR ILLUSTRATIVE PURPOSES ONLY

REFERENCED DETAILS/SCHEDULES:
S 15855 001

ADDITIONAL INFORMATION:

MODULES: 2

UNIVERSITY OF MICHIGAN
ARCHITECTURE, ENGINEERING AND CONSTRUCTION
ARCHITECTURE & ENGINEERING
326 East Hoover, Mail Stop B
Ann Arbor, MI 48108-1002
Phone: 734-764-3414
Fax: 734-936-3334

Laboratory Terminal Airflow Unit Sample Schedule

DIVISION: 15
SECTION: 15820
FILE: D 15820 002 06 06.dgn
ISSUE DATE: 06/01/06

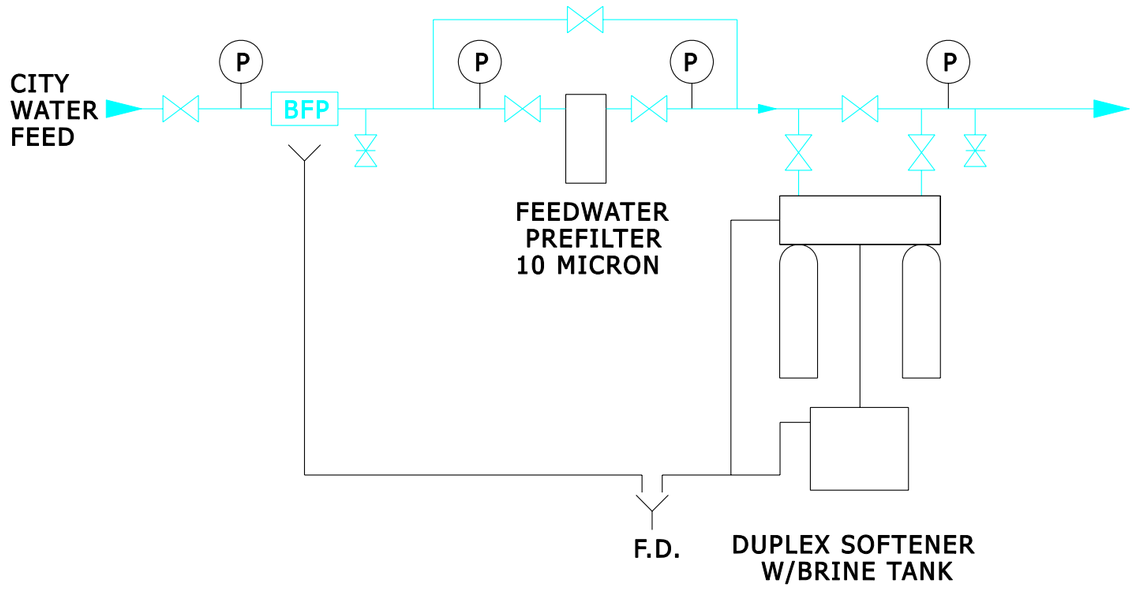

WATER SOFTENER FOR BOILERS SYSTEM SCHEMATIC

(NOT ALL REQUIRED COMPONENTS SHOWN)

SYMBOL LEGEND

= ISOLATION VALVE

= SAMPLE PORT

P = PRESSURE GAUGE

PIPING SYSTEM PRESSURE TEST TABLE

SYSTEM	MEDIA	PRESS. (*)	PERMISSIBLE PRESS. DROP
ABOVE GROUND WATER	WATER	200 PSIG	1 PSIG IN 2 HRS
STEAM AND CONDENSATE	WATER	125 PSIG	1 PSIG IN 2 HRS
LAB VACUUM	AIR	75 PSIG	2 PSIG IN 2 HRS
COMPRESSED AIR	AIR	150 PSIG	2 PSIG IN 2 HRS
NATURAL GAS	AIR	100 PSIG	0 PSIG IN 2 HRS
WASTE AND VENT	WATER	10 FEET	0 LEAKAGE IN 10 MINUTES

(*) OR 1-1/2 TIMES OPERATING PRESSURE, WHICHEVER IS GREATER.

T 15060 001 02 07

DUCTWORK CONST. & APPLICATION SCHEDULE

GENERAL SUPPLY/RETURN/TRANSFER/EXHAUST

DUCT	PRESSURE CLASS (IN. W.G.)	SMACNA SEAL CLASS	ASHRAE LEAK CLASS	MATERIAL	NOTES
SUPPLY FROM AHU TO TAU	+6	A	3	G-90	---
SUPPLY DOWNSTREAM FROM TAU	+2	C	N/A	G-90	---
RETURN DOWNSTREAM FROM TAU AND IN SHAFTS TO RF	-3	A	3	G-90	---
RETURN UPSTREAM FROM TAU	-2	C	N/A	G-90	---
RETURN FROM RF TO AHU	+3	A	3	G-90	---
RELIEF/EXH. FROM RF/EF	+3	A	N/A	G-90	---
SUPPLY DOWNSTREAM FROM FCU	+2	C	N/A	G-90	---
RETURN UPSTREAM FROM FCU	-2	C	N/A	G-90	---
TRANSFER DUCT	+2	C	N/A	G-90	---
LINEAR SUPPLY/RETURN GRILLE PLENUM	+2	C	N/A	G-90	---
EXHAUST ON ROOF	+/-2	A	3	316L S.S. OR ALUM.	---
PLENUMS	+/-6	A	3	SAME AS DUCTS SERVED	---
EXHAUST STACKS	+3	WELDED	0	316L S.S.	1
ALL OTHER SUPPLY/RETURN/EXHAUST NOT SPECIFICALLY IDENTIFIED	+/-2	C	N/A	G-90	---

LABORATORY AND VIVARIUM SUPPLY/RETURN/EXHAUST

DUCT	PRESSURE CLASS (IN. W.G.)	SEAL CLASS	LEAK CLASS	MATERIAL	NOTES
SUPPLY FROM AHU TO LTAU	+6	A	3	G-90	---
SUPPLY DOWNSTREAM FROM LTAU	+2	A	3	G-90	---
EXH./RET. IN SHAFTS AND INACCESSIBLE LOCATIONS	-6	A	3	PCD	---
EXH./RET. IN PENTHOUSE AND MECH. ROOMS-ACCESSIBLE	+/-6	A	3	G-90	---
EXH./RET. ON ROOF	+/-6	A	3	G-90	3
EXH./RET DOWNSTREAM FROM LTAU	-6	A	3	G-90	---
EXH./RET. UPSTREAM FROM LTAU	-2	A	3	G-90	---
CHEMICAL FUME HOOD EXH. DOWNSTREAM OF LTAU	-6	A	3	PCD	4
CHEMICAL FUME HOOD EXH. UPSTREAM OF LTAU	-2	A	3	PCD	---
DARK ROOM EXH. DOWNSTREAM OF LTAU	-6	A	3	PCD	---
DARK ROOM EXH. UPSTREAM OF LTAU	-2	A	3	PCD	---
HIGH PROCESS HUMIDITY EXH. DOWNSTREAM OF LTAU	-6	WELDED	0	316L S.S.	1
HIGH PROCESS HUMIDITY EXH. UPSTREAM OF LTAU	-2	WELDED	0	316L S.S.	1
CAGE WASH/DISHWASHER EXH.	-6	WELDED	0	316L S.S.	1
EXH. PLENUM	-6	A	3	---	2,3

ABBREVIATIONS:

EF = EXHAUST FAN

FCU = FAN COIL UNIT

LTAU = LABORATORY TERMINAL AIRFLOW UNIT

RF = RETURN FAN

TAU = TERMINAL AIRFLOW UNIT

NOTES:

1. MUST BE 100% LEAK PROOF WELD.
2. MATERIAL AND COATING TO MATCH FAN, OTHERWISE STAINLESS STEEL.
3. SHALL BE INSULATED.
4. PCD FROM LTAU TO POINT OF CONNECTION WITH ANY OTHER EXHAUST DUCT.

DAMPER CONSTRUCTION AND APPLICATION SCHEDULE

TYPE	RATED APPROACH VELOCITY (FPM)	MIN. S.P. RATING (IN. W.G.)	INSTANT PRESSURE RATING (IN. W.G.)	LEAK CLASS	BLADE TYPE	U.L. LISTING
FIRE DAMPERS > ±2" W.G. AND AT SHAFTS	4000	6	14	N/A	CURTAIN	555 DYNAMIC
OTHER FIRE DAMPERS	2000	4	8	I	PARALLEL	N/A
FIRE/SMOKE DAMPERS > ±2" W.G. AND AT SHAFTS	3000	6	14	I	AIRFOIL	555 555S DYNAMIC
OTHER FIRE/SMOKE DAMPERS	2000	4	8	I	OPPOSED 3V	555 555S DYNAMIC
SMOKE DAMPERS	3000	4	14	I	AIRFOIL	555S DYNAMIC
COMBINATION SMOKE/ISOLATION DAMPERS	4500	6	20	I	AIRFOIL	555S DYNAMIC
TEMPERATURE CONTROL DAMPERS	SEE TEMPERATURE CONTROL SPECIFICATION					
BACKDRAFT DAMPERS	2000	4	6	N/A	PARALLEL	N/A
BALANCE DAMPERS GREATER THAN 12"	2500	4	N/A	N/A	OPPOSED	N/A
BALANCE DAMPERS LESS THAN 12"	2500	2	N/A	N/A	SINGLE/ OPPOSED	N/A

T 15895 001 09 10

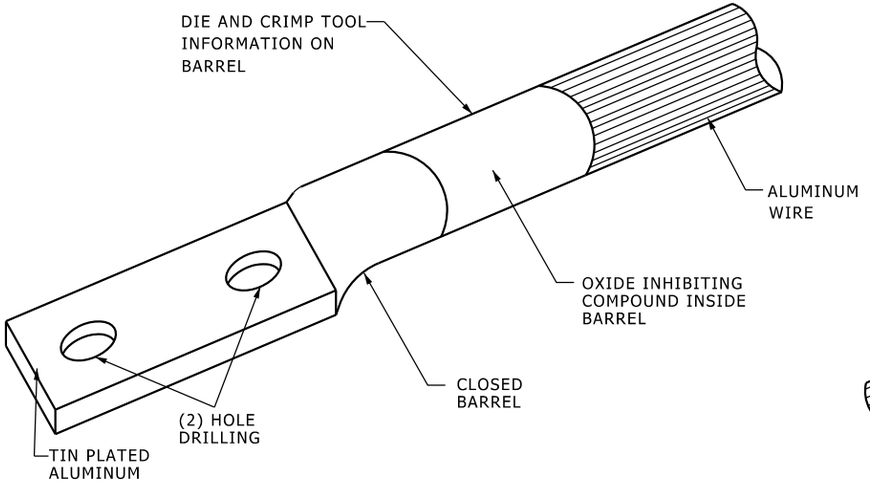

ALUMINUM WIRE TERMINATION
TO DRILLED BUS

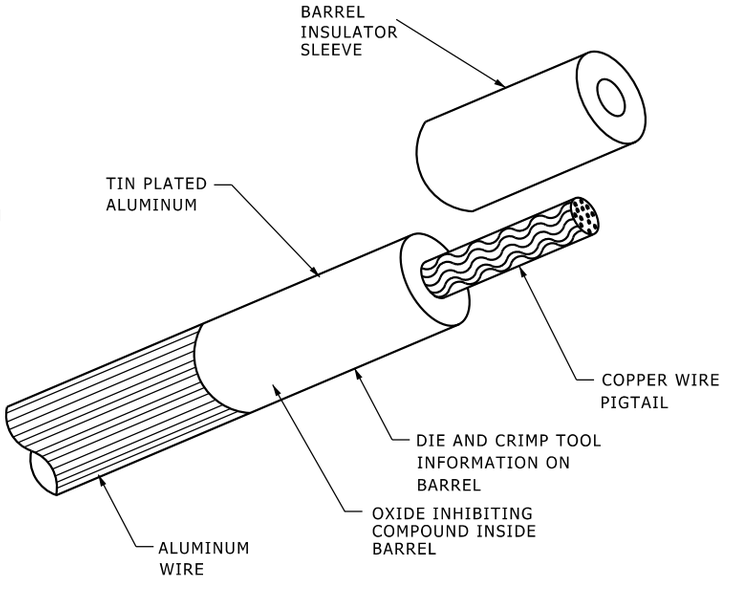

ALUMINUM WIRE TERMINATION
TO MECHANICAL CLAMP CONNECTOR

NOTES:
1. ALUMINUM WIRES SHALL BE TERMINATED TO BUS BARS USING 2-HOLE COMPRESSION LUGS AND TO MECHANICAL CLAMP CONNECTORS USING COPPER WIRE PIGTAIL COMPRESSION LUGS. ALUMINUM WIRES SHALL NOT BE CLAMPED DIRECTLY IN MECHANICAL CLAMP CONNECTORS.

2. ONLY THE SPECIFIED BRANDS AND MODELS OF COMPRESSION LUGS ARE ACCEPTABLE.

3. COMPRESSION LUGS SHALL BE PRE-FILLED WITH AN OXIDE INHIBITOR.

4. ONLY THE CRIMPING TOOLS AND DIES RECOMMENDED BY THE LUG MANUFACTURER ARE ACCEPTABLE. DIE AND CRIMP TOOL NUMBERS SHALL BE CLEARLY VISIBLE FOR INSPECTION AFTER THE LUGS ARE CRIMPED.

5. ALUMINUM WIRES HAVE LARGER MINIMUM BEND RADII THAN EQUIVALENT COPPER WIRES, AND COMPRESSION LUGS INCREASE BEND RADII EVEN MORE. OVERSIZE SUBSTATION SECONDARY GEAR, ELECTRICAL ENCLOSURES, AND PANEL WIRING GUTTERS ACCORDINGLY.

6. VERIFY THAT OVERSIZED EQUIPMENT FITS IN AVAILABLE SPACE.

ALUMINUM WIRE TERMINATIONS

NO SCALE

260513001.DGN

3-Phase, 3-Wire Systems									
		Copper					Aluminum		
Amps	Quantity	Size	Ground	Conduit		Quantity	Size	Ground	Conduit
200	3	#3/0	#6	2"		3	250 kcmil	#4	2"
225	3	#4/0	#4	2"		3	300 kcmil	#2	2"
250	3	250 kcmil	#4	2-1/2"		3	350 kcmil	#2	2-1/2"
300	3	300 kcmil	#4	2-1/2"		3	500 kcmil	#2	2-1/2"
350	3	400 kcmil	#3	2-1/2"		3	600 kcmil	#1	3"
400	3	500 kcmil	#3	3"		3	700 kcmil	#1	3"
3-Phase, 4-Wire Systems									
		Copper					Aluminum		
Amps	Quantity	Size	Ground	Conduit		Quantity	Size	Ground	Conduit
200	4	#3/0	#6	2"		4	250 kcmil	#4	2-1/2"
225	4	#4/0	#4	2-1/2"		4	300 kcmil	#2	2-1/2"
250	4	250 kcmil	#4	2-1/2"		4	400 kcmil	#2	3"
300	4	350 kcmil	#4	3"		4	500 kcmil	#2	3"
350	4	500 kcmil	#3	3"		4	600 kcmil	#1	3-1/2"
400	4	600 kcmil	#3	3-1/2"		4	800 kcmil	#1	4"
						2 runs	250 kcmil	#1	2-1/2"

For the copper services indicated, provide deduct pricing to change to the equivalent aluminum service. Aluminum conductors shall have type XHHW-2 jackets. Termination lugs for aluminum conductors shall be CU/AL rated, and shall be made using an electrical powered mechanical crimping device.

260513002.dgn

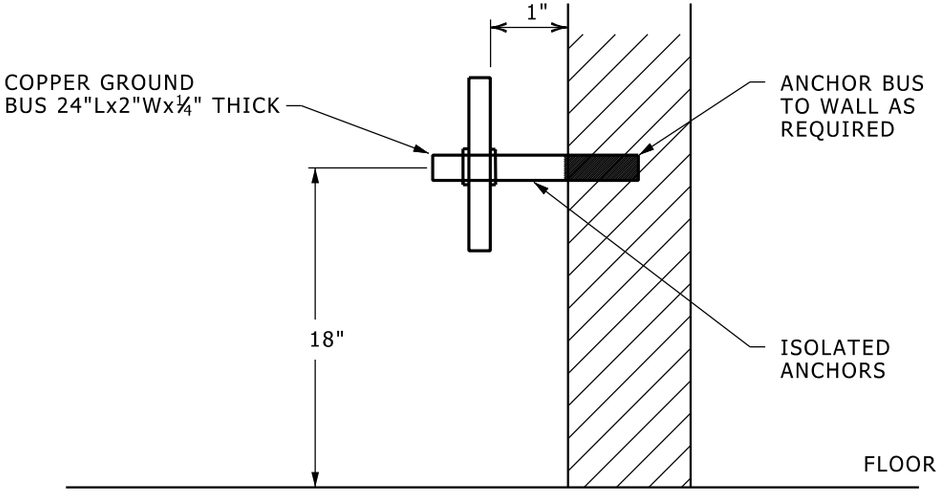

GROUND BUS DETAIL - POWER

NO SCALE

260526001.dgn

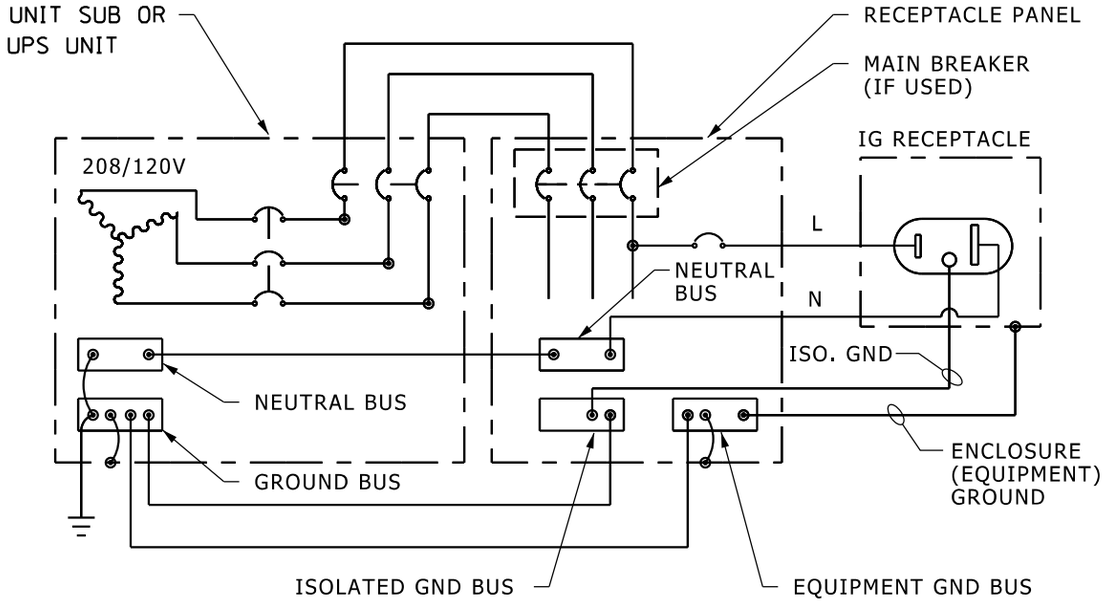

ISOLATED GROUND RECEPTACLE WIRING DIAGRAM

NO SCALE

26052602.dgn

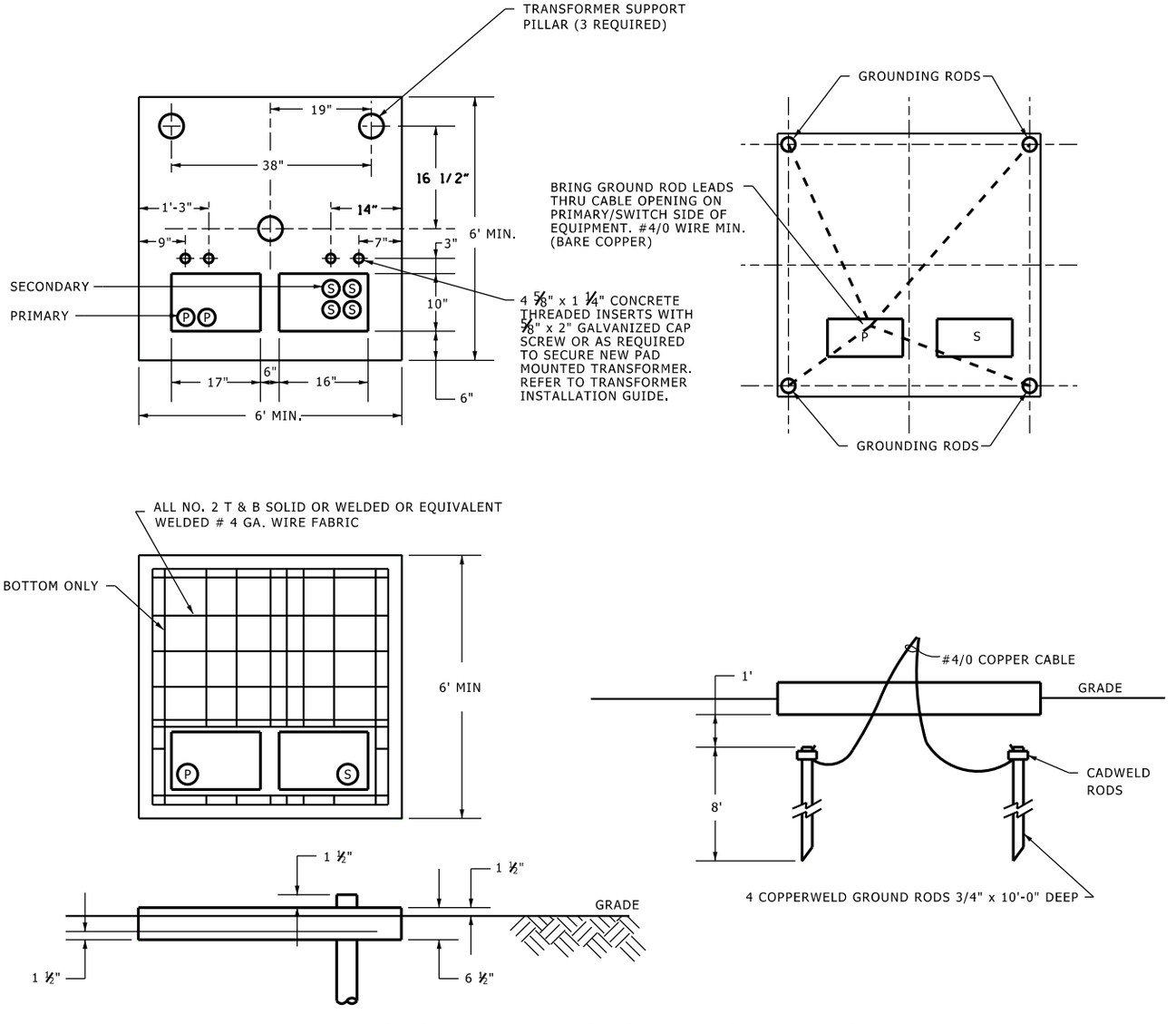

TRANSFORMER PAD GROUNDING DETAILS

NO SCALE

26052503.dgn

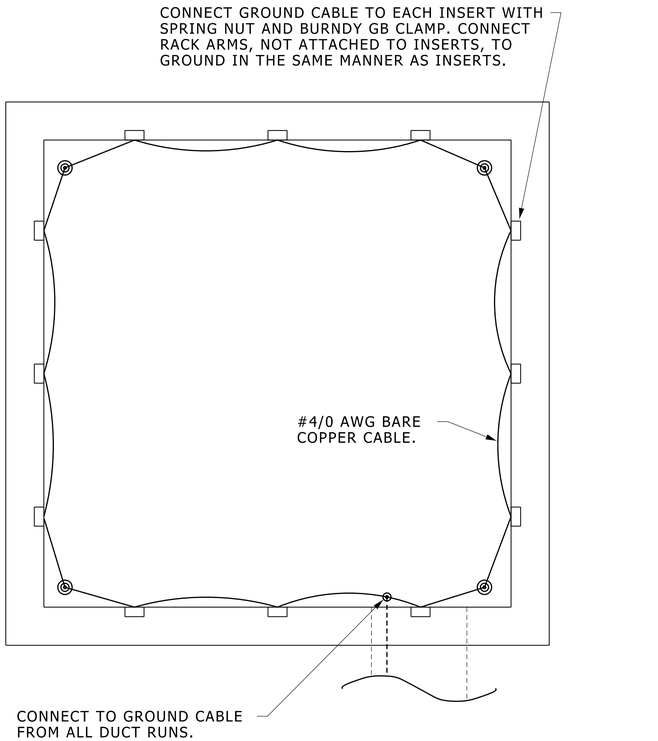

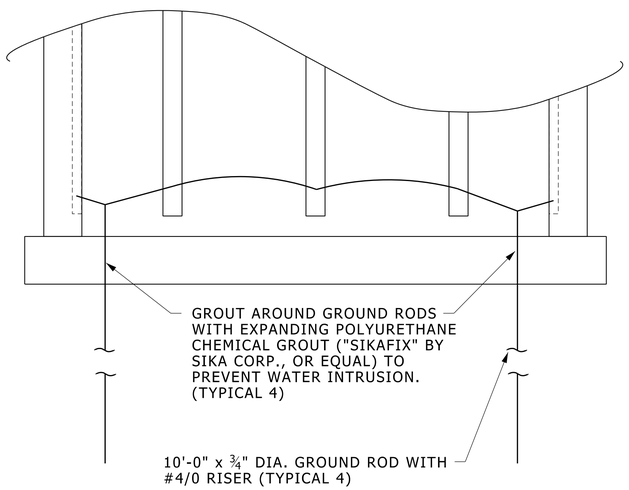

MANHOLE GROUNDING

NO SCALE

26052604.dgn

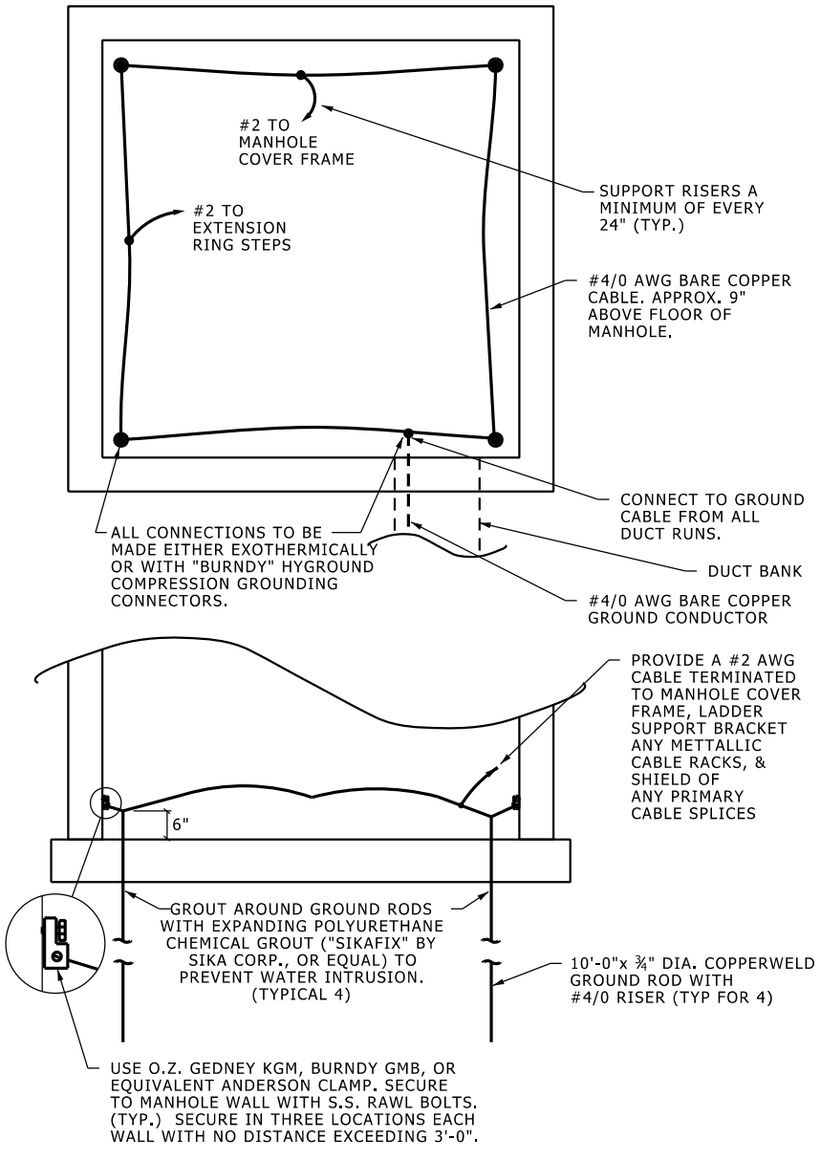

POWER MANHOLE
GROUNDING WITH NON-METALLIC RACKS

NO SCALE

26052605.dgn

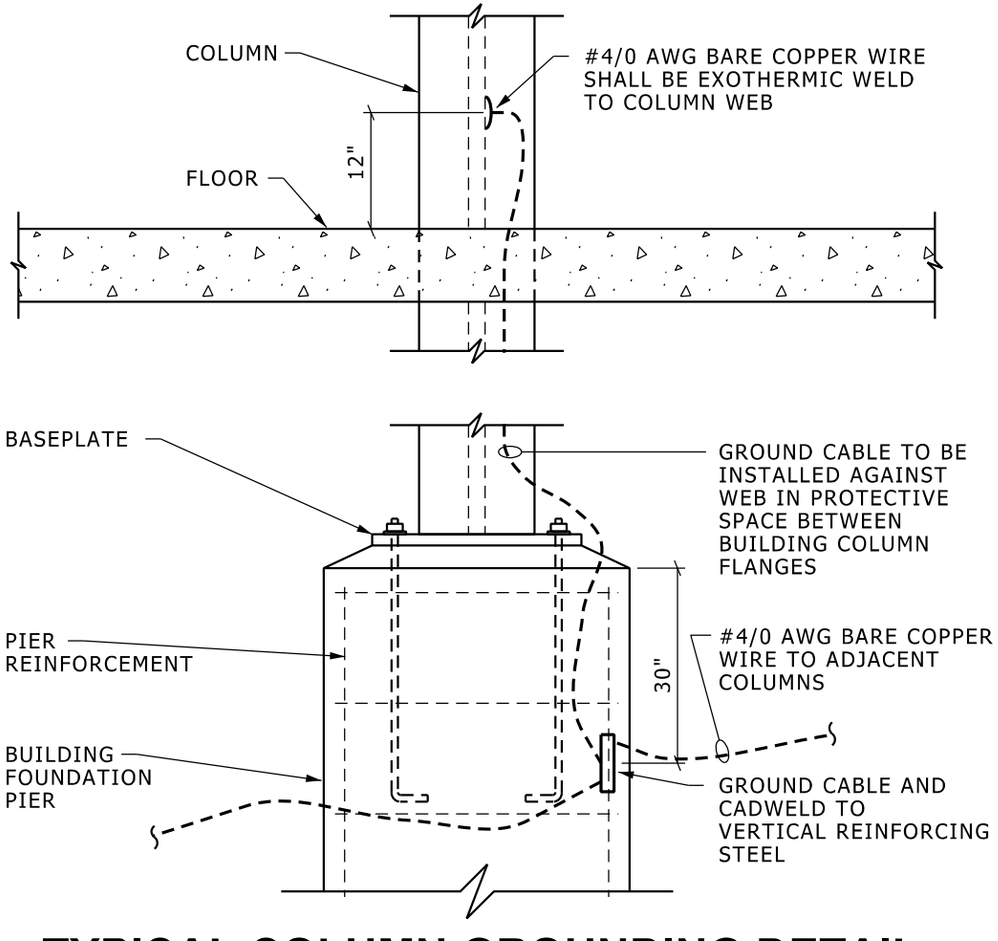

TYPICAL COLUMN GROUNDING DETAIL

NO SCALE

26052606.dgn

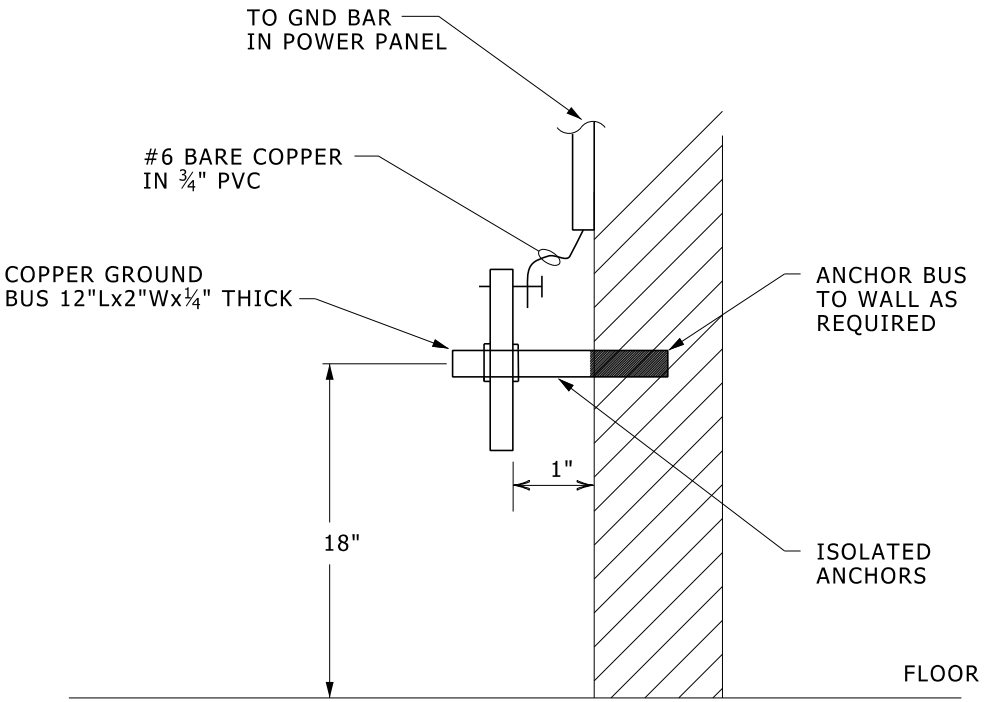

GROUND BUS DETAIL - TELCOM

NO SCALE

26052607.dgn

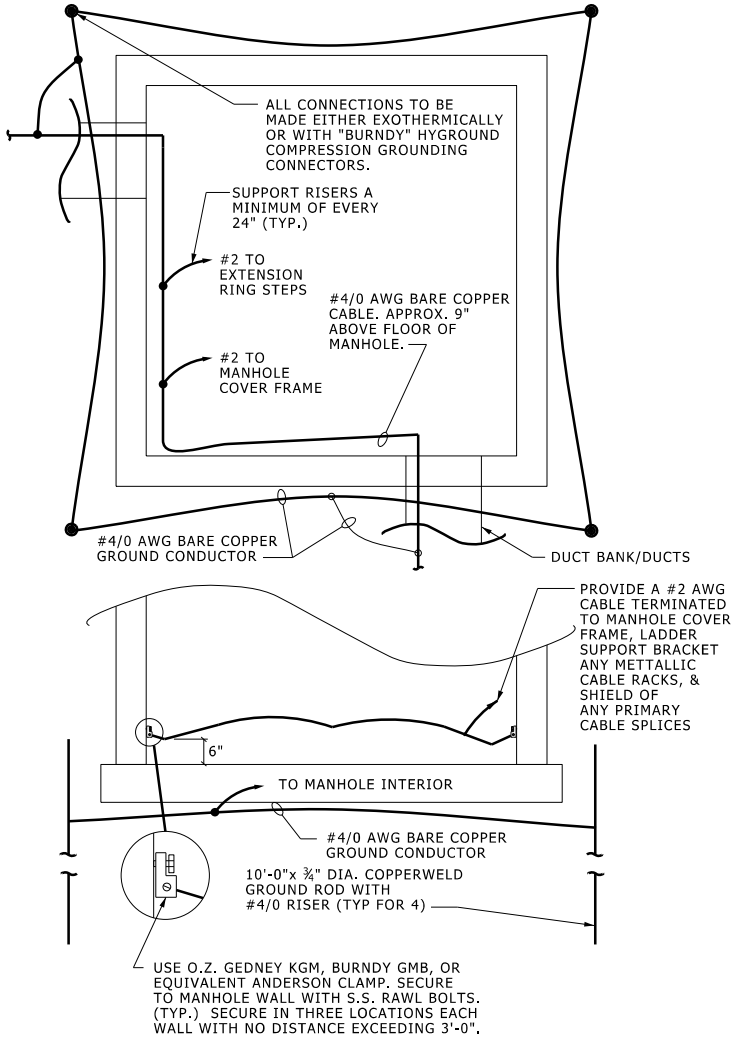

POWER MANHOLE FOR HIGH WATER TABLE GROUNDING WITH NON-METALIC RACKS

NO SCALE

26052608.dgn

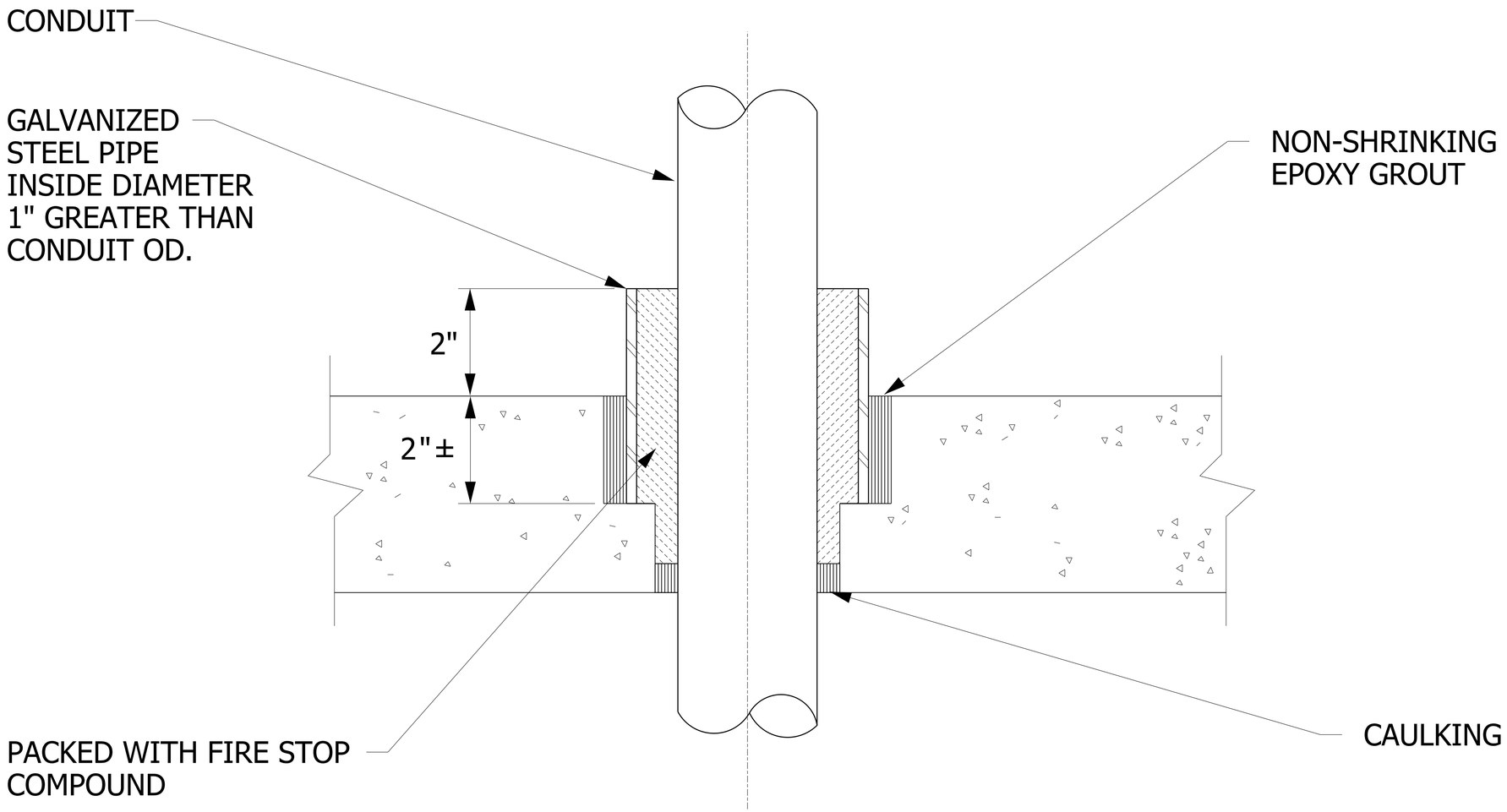

CONDUIT PENETRATION THRU EXISTING FLOOR

NO SCALE

26053301.dgn

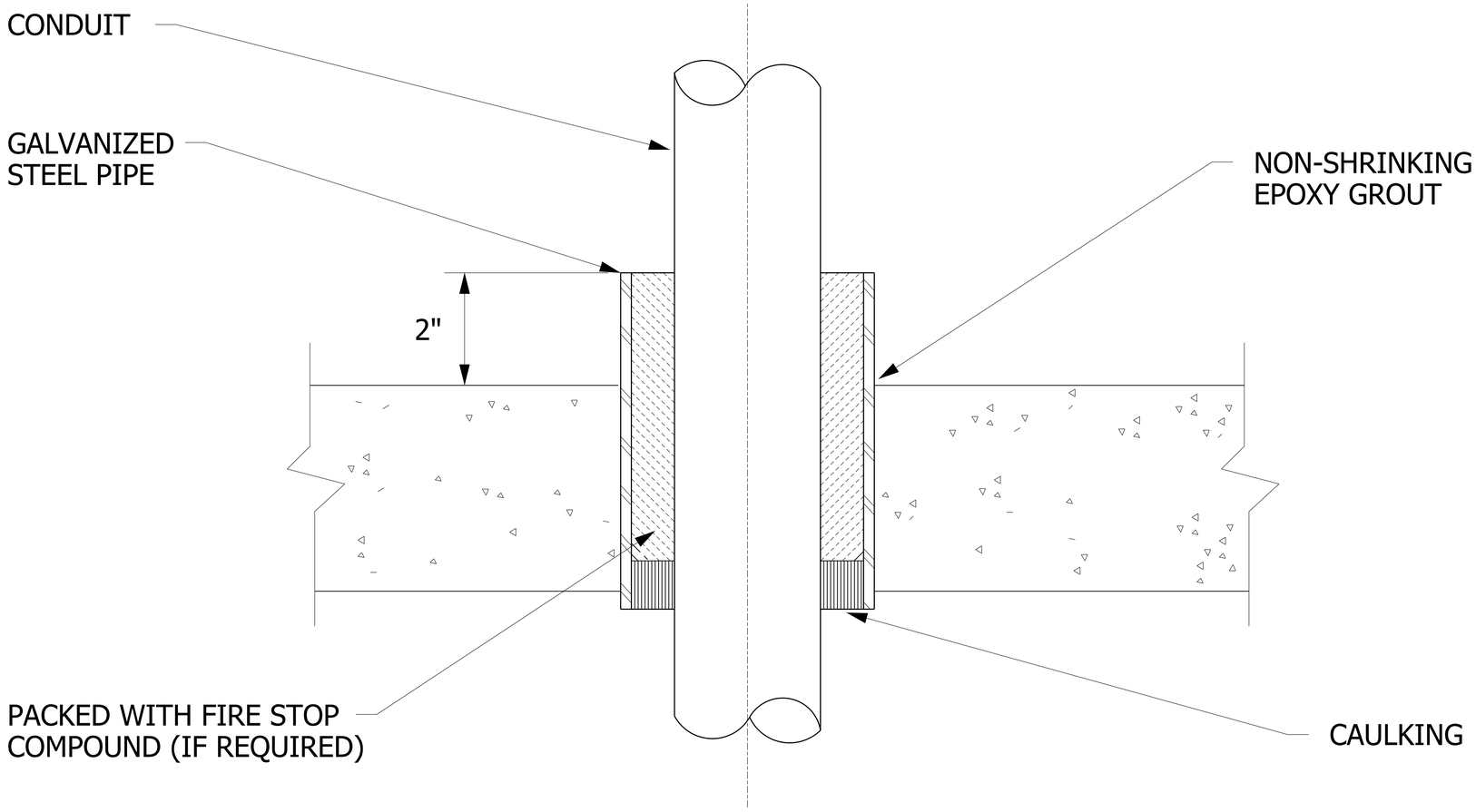

CONDUIT PENETRATION THRU NEW FLOOR

NO SCALE

26053302.dgn

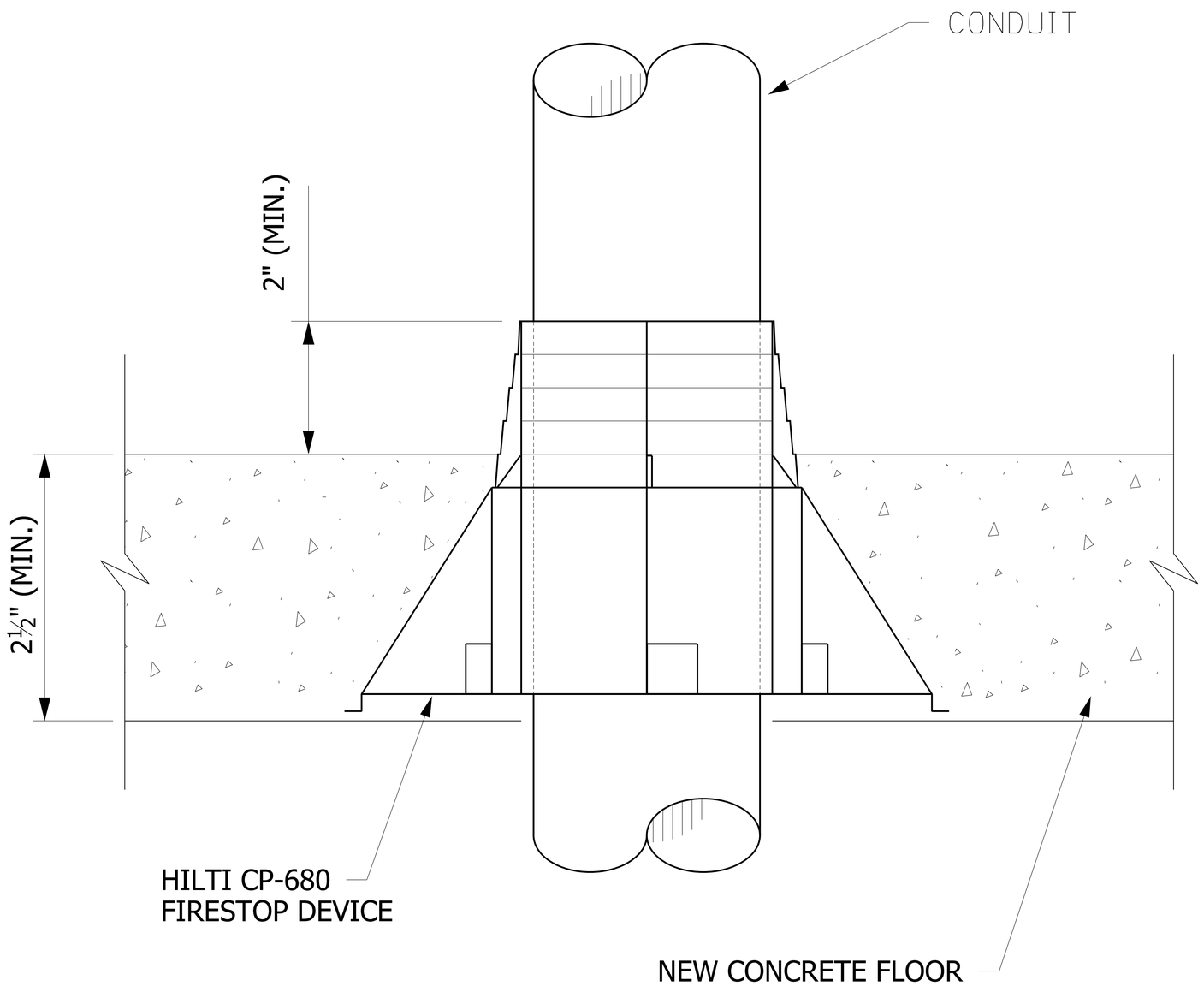

NOTE:
HILTI DEVICE IS APPROVED ONLY FOR PENETRATIONS
THROUGH NEW FLOORS.

HILTI FIRESTOP CONDUIT PENETRATION

NO SCALE

26053303.dgn

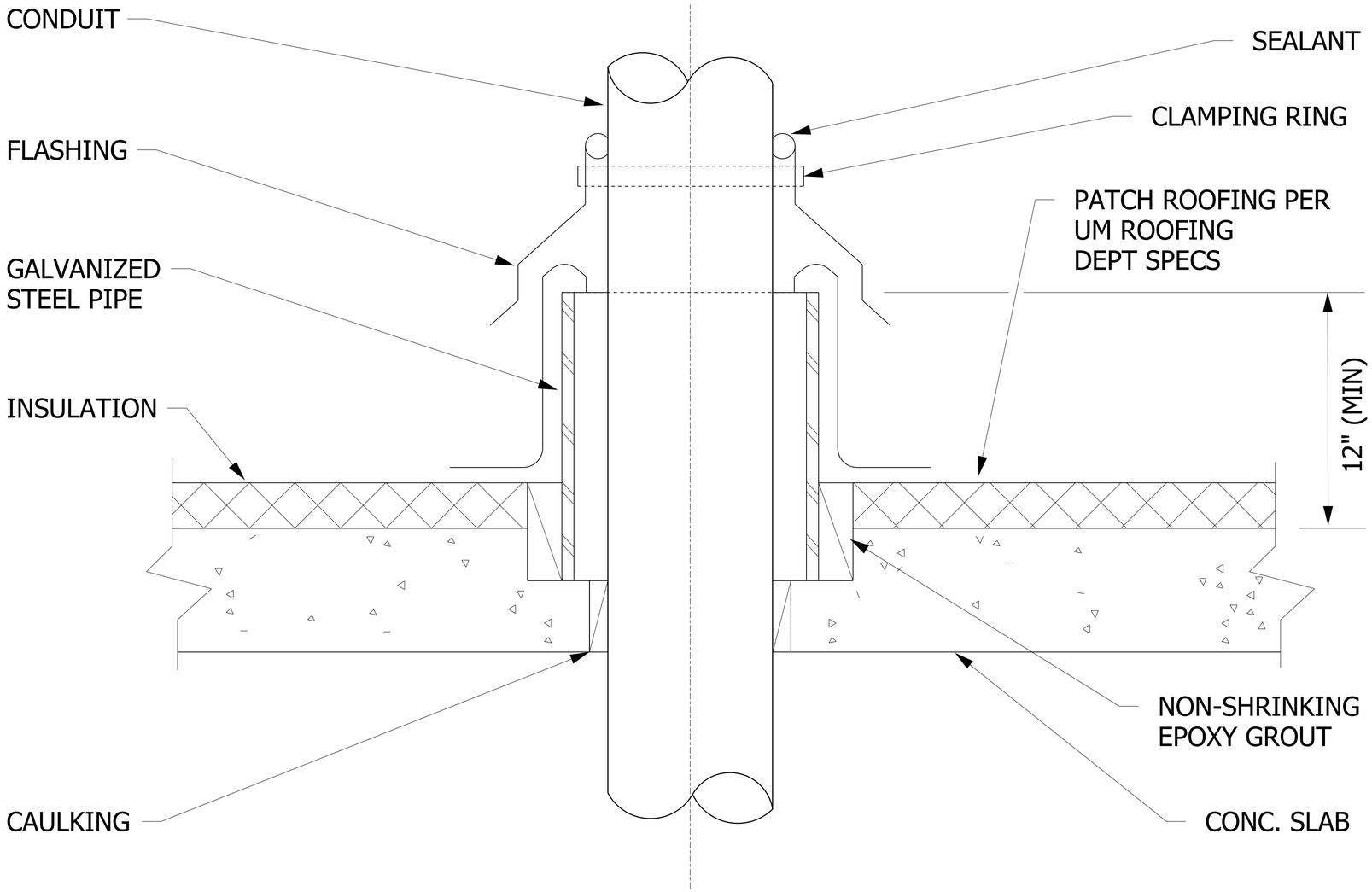

CONDUIT PENETRATION THRU EXISTING ROOF

NO SCALE

26053304.dgn

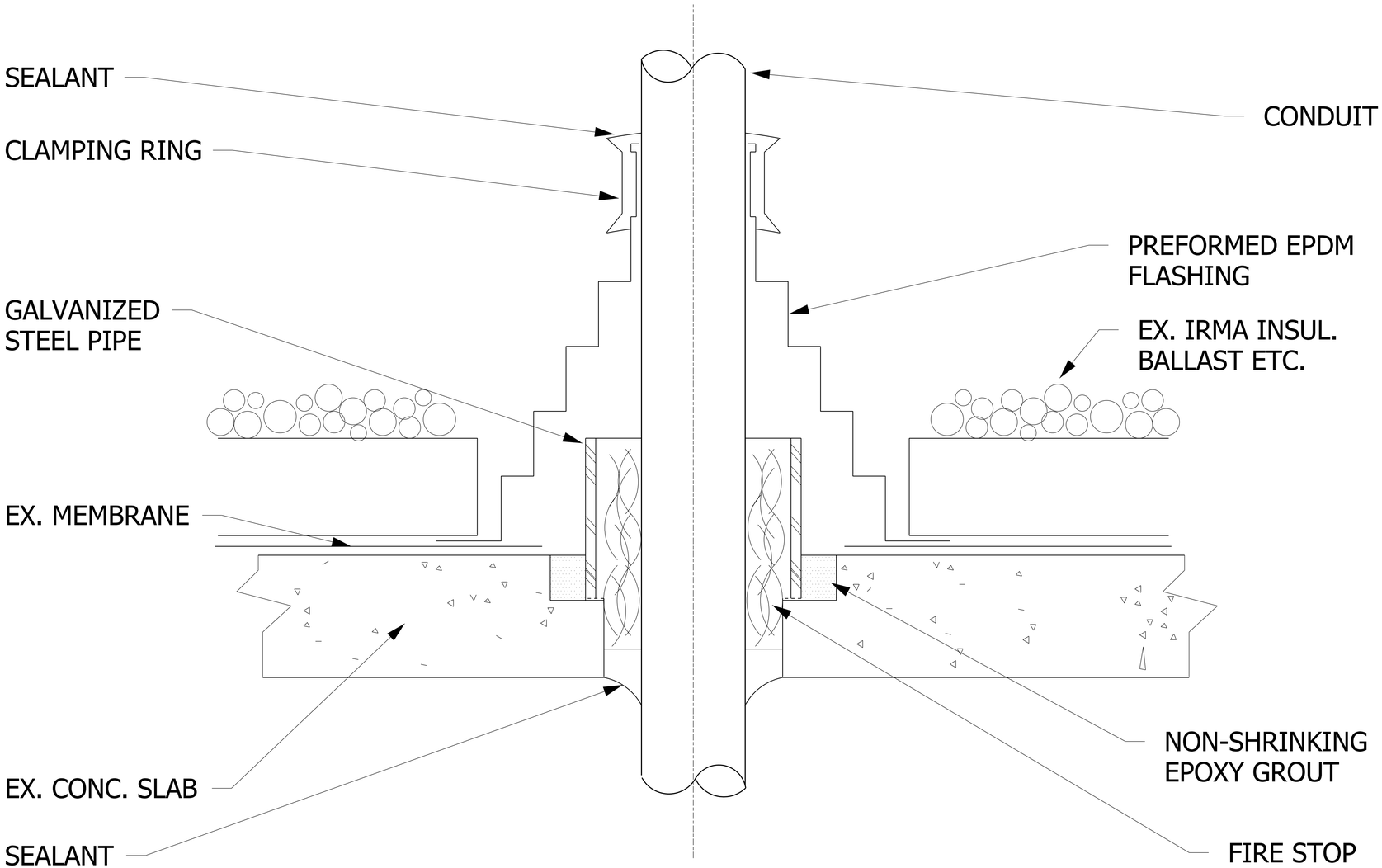

CONDUIT PENETRATION THRU ROOF

NO SCALE

26053305.dgn

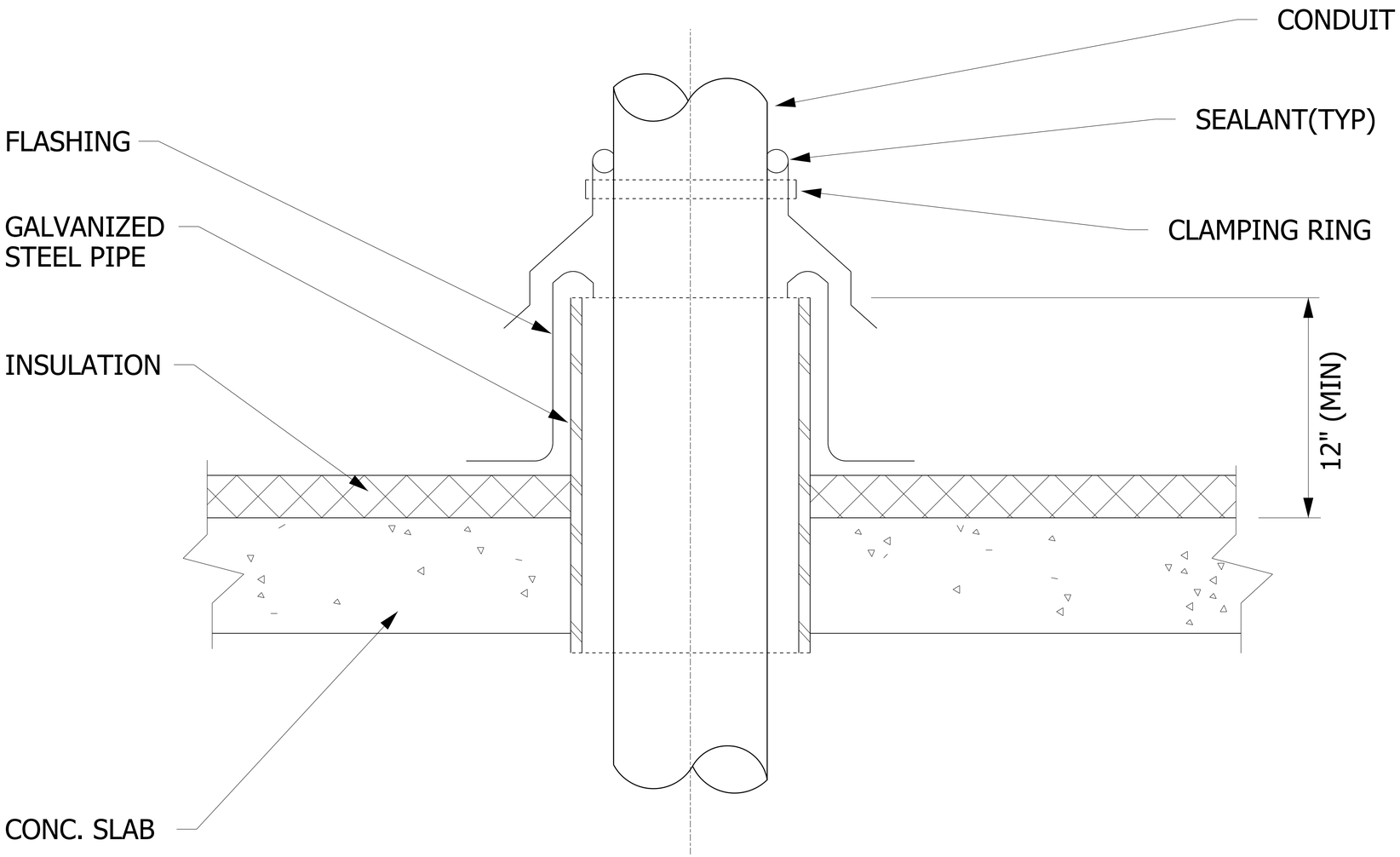

CONDUIT PENETRATION THRU NEW ROOF

NO SCALE

26053306.dgn

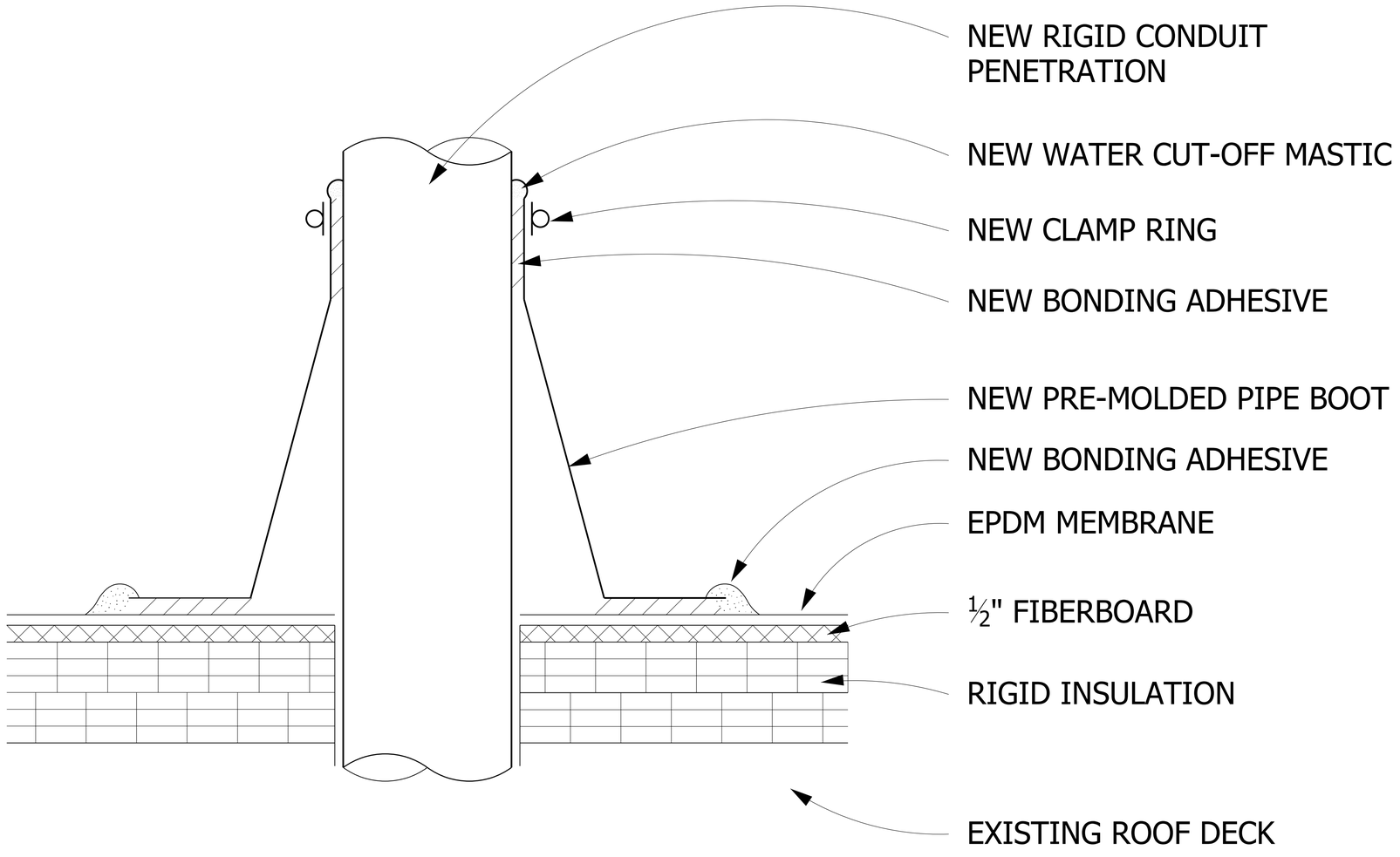

NEW CONDUIT THRU NEW MEMBRANE ROOF

NO SCALE

26053307.dgn

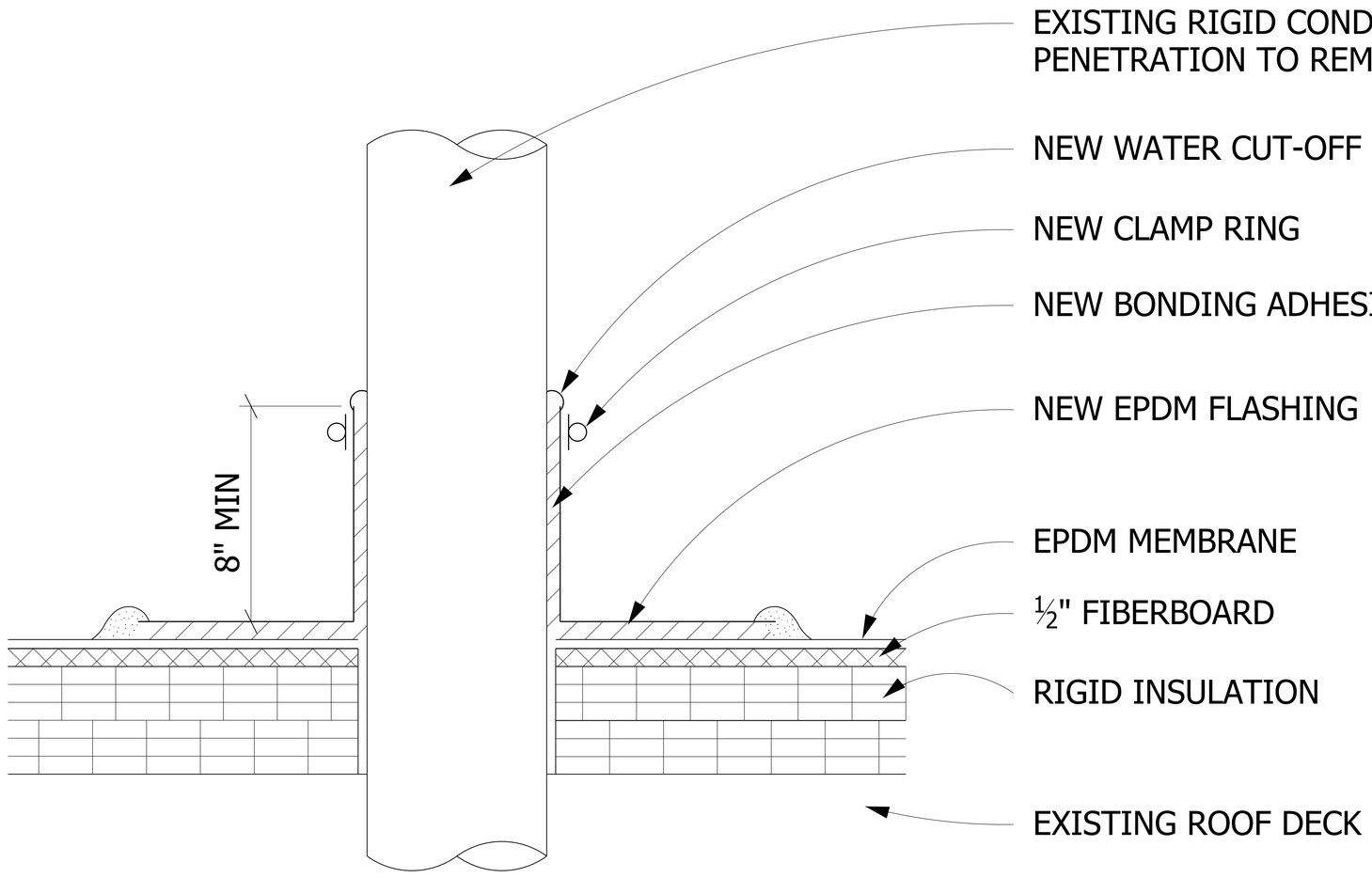

EXISTING CONDUIT
THRU NEW MEMBRANE ROOF

NO SCALE

26053308.dgn

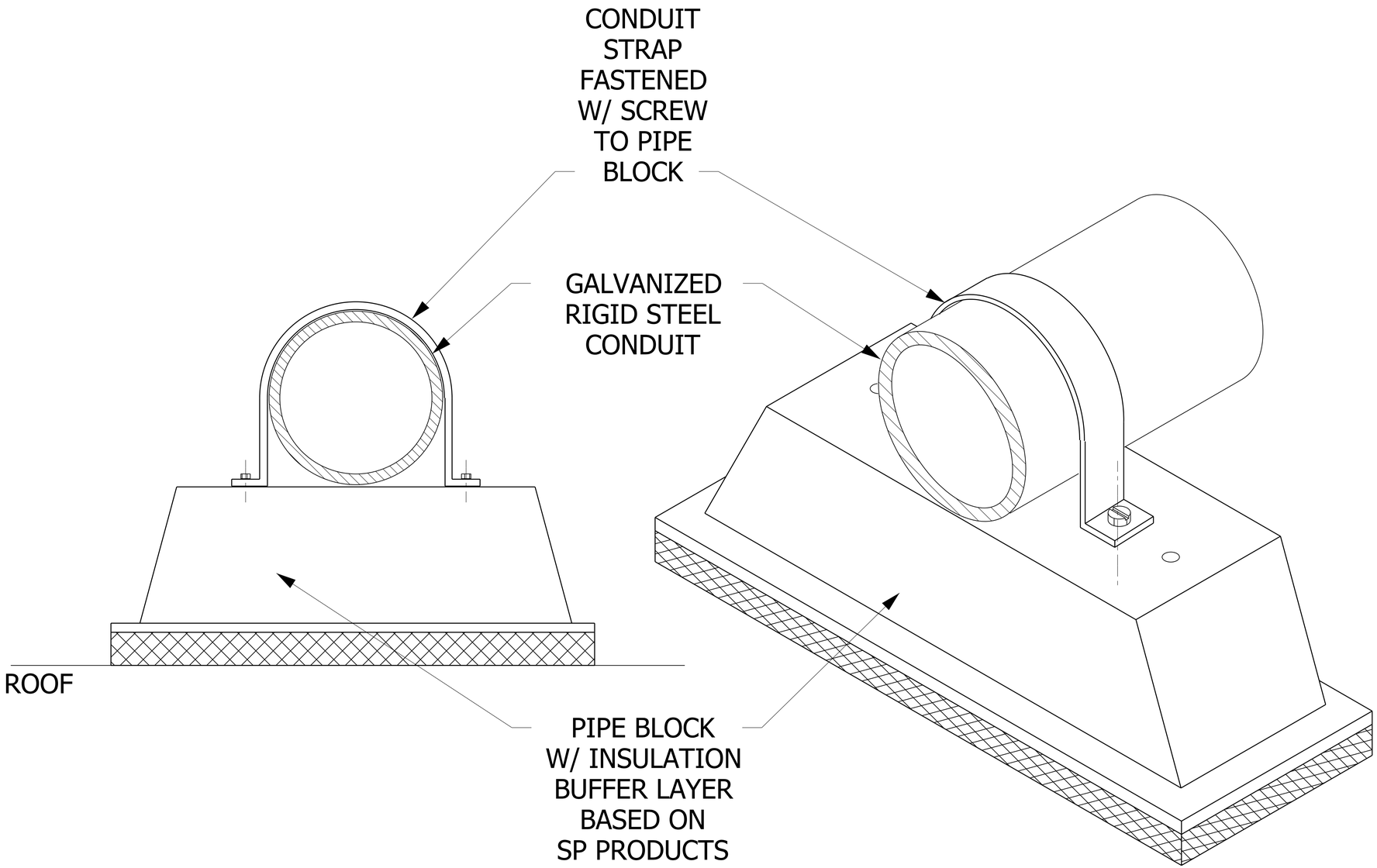

CONDUIT SUPPORT DETAIL - PIPE BLOCK ON EXISTING ROOF

NO SCALE

26053309.dgn

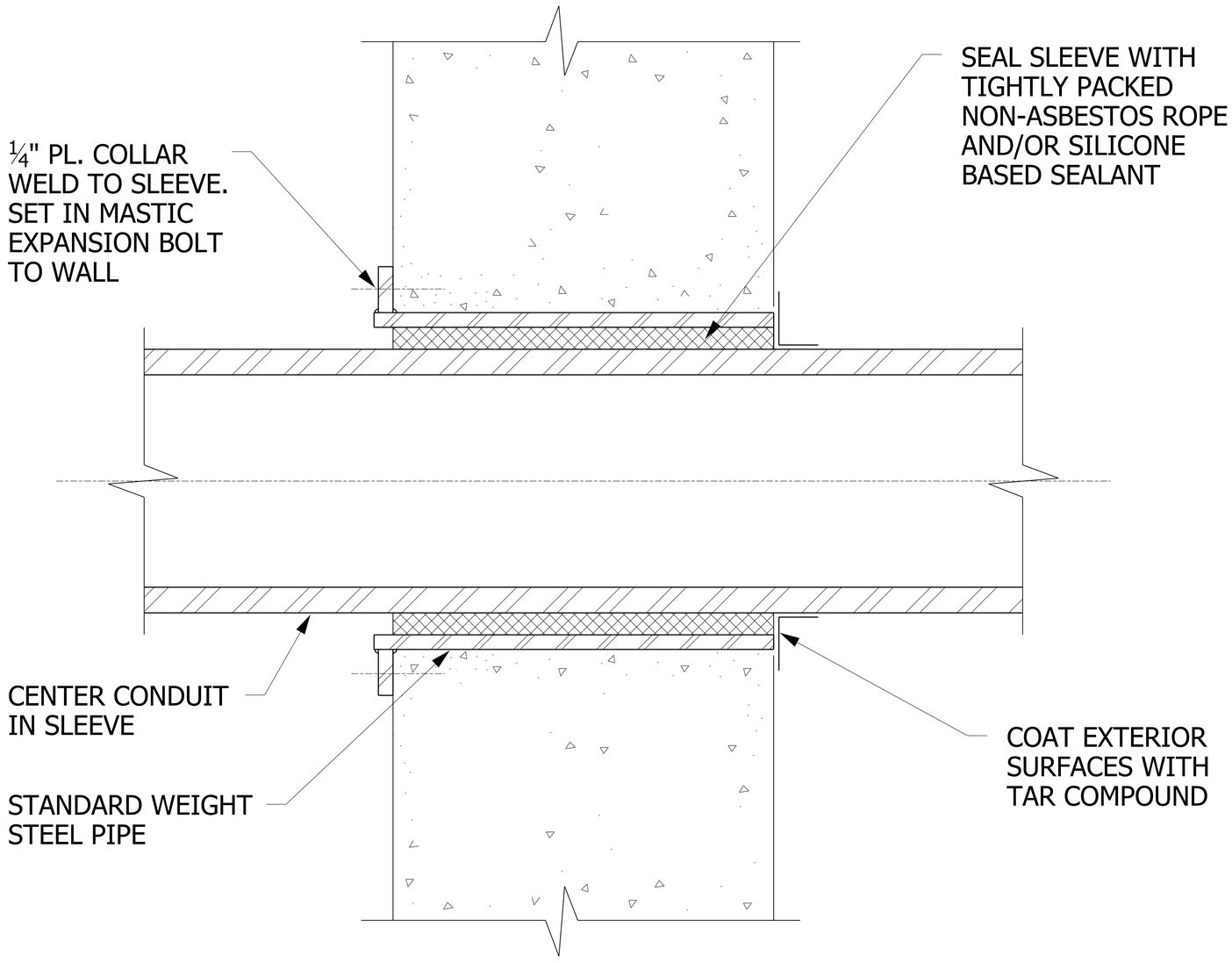

CONDUIT THROUGH EXISTING EXTERIOR WALL

NO SCALE

26053310.dgn

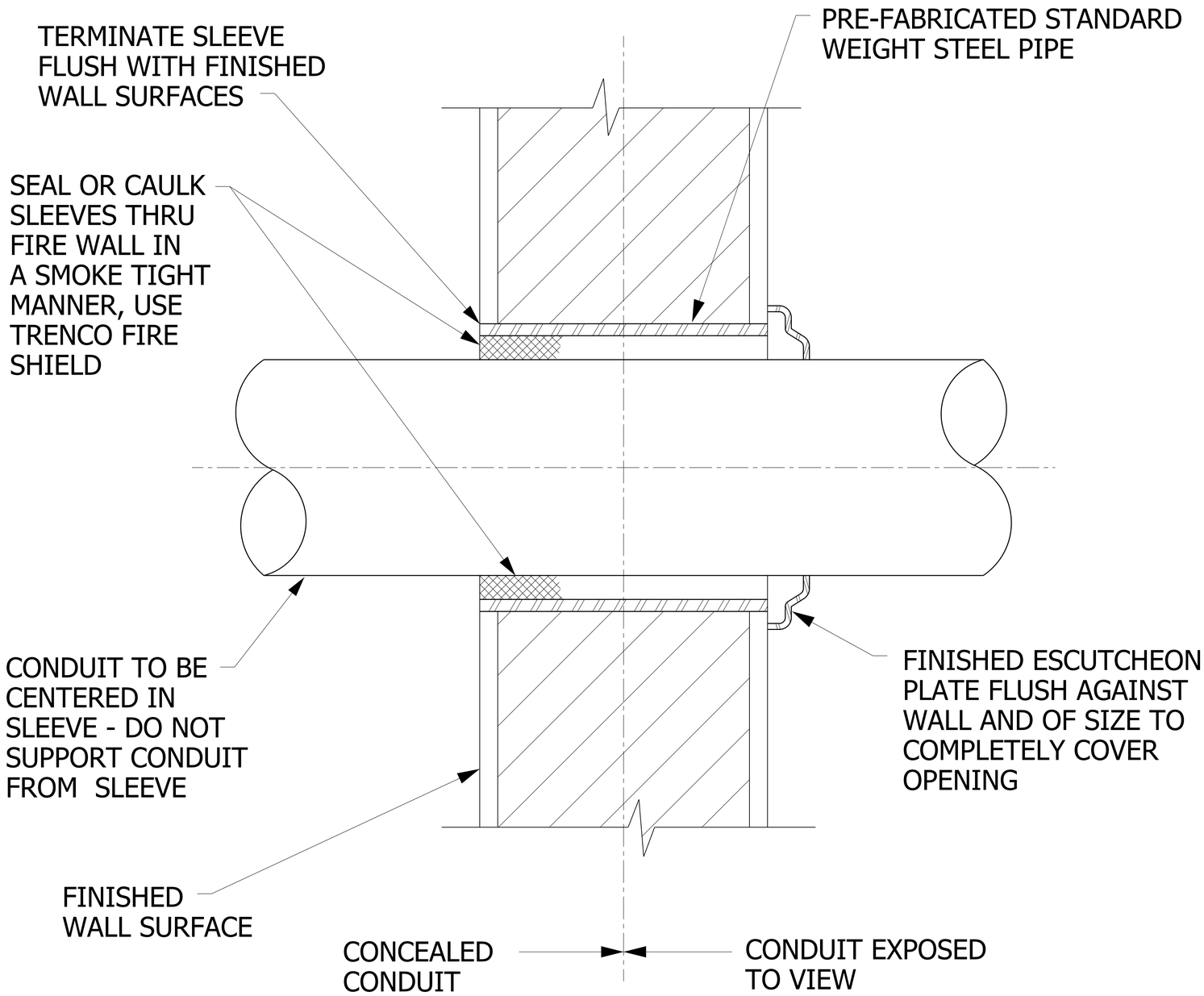

CONDUIT SLEEVE THRU INTERIOR WALL

NO SCALE

26053311.dgn

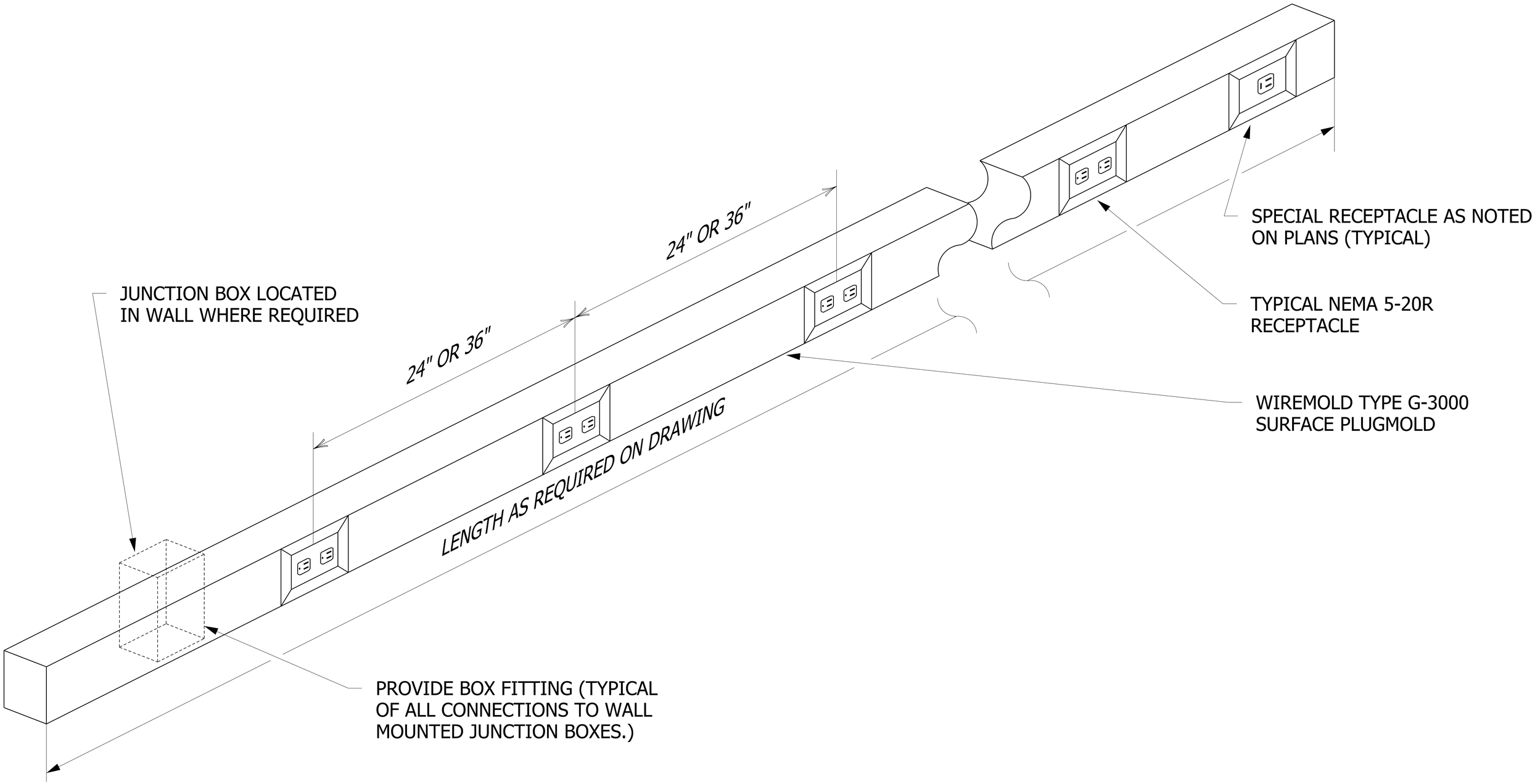

BENCH AND WALL MOUNTED SURFACE RACEWAY DETAIL

NO SCALE

26053312.dgn

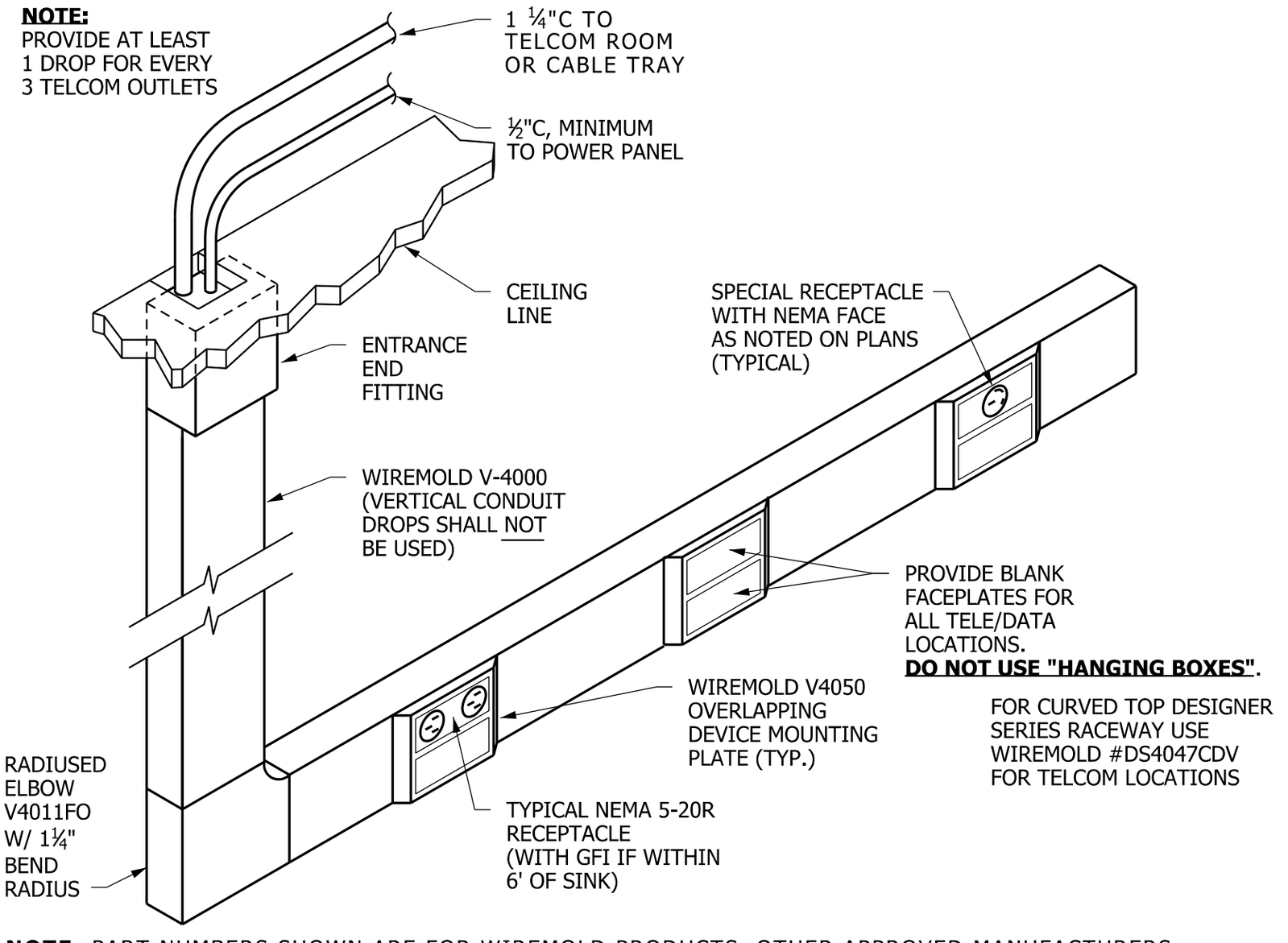

NOTE: PART NUMBERS SHOWN ARE FOR WIREMOLD PRODUCTS. OTHER APPROVED MANUFACTURERS ARE HUBBELL AND THOMAS & BETTS.

INSTALLATION DETAIL - FOR EXISTING WALLS
TYPICAL DUAL CHANNEL METAL RACEWAY

26053313.dgn

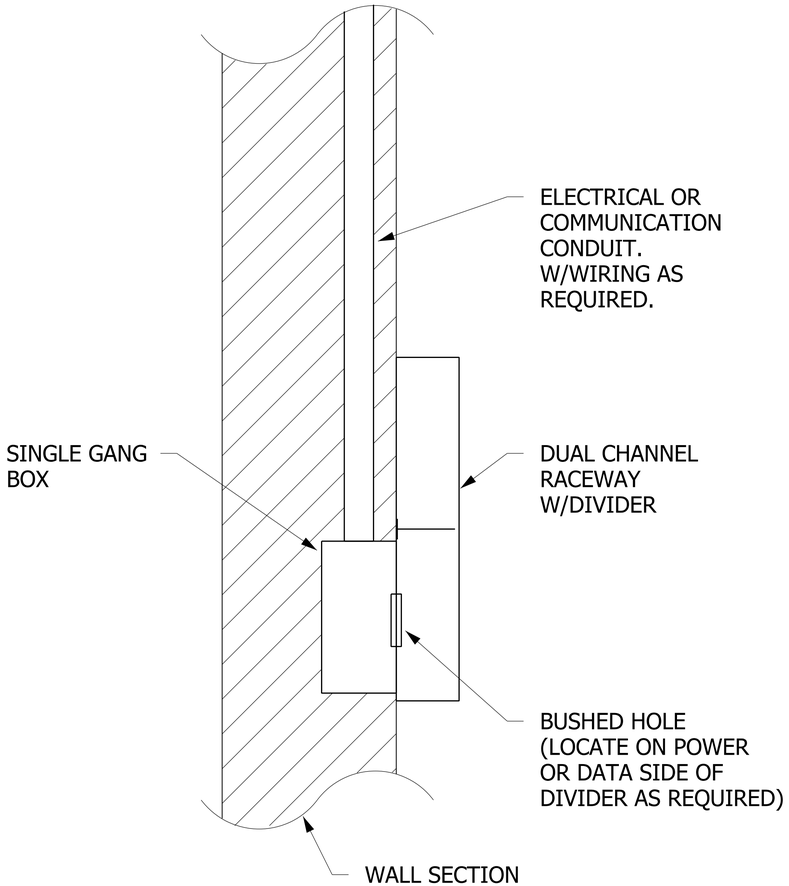

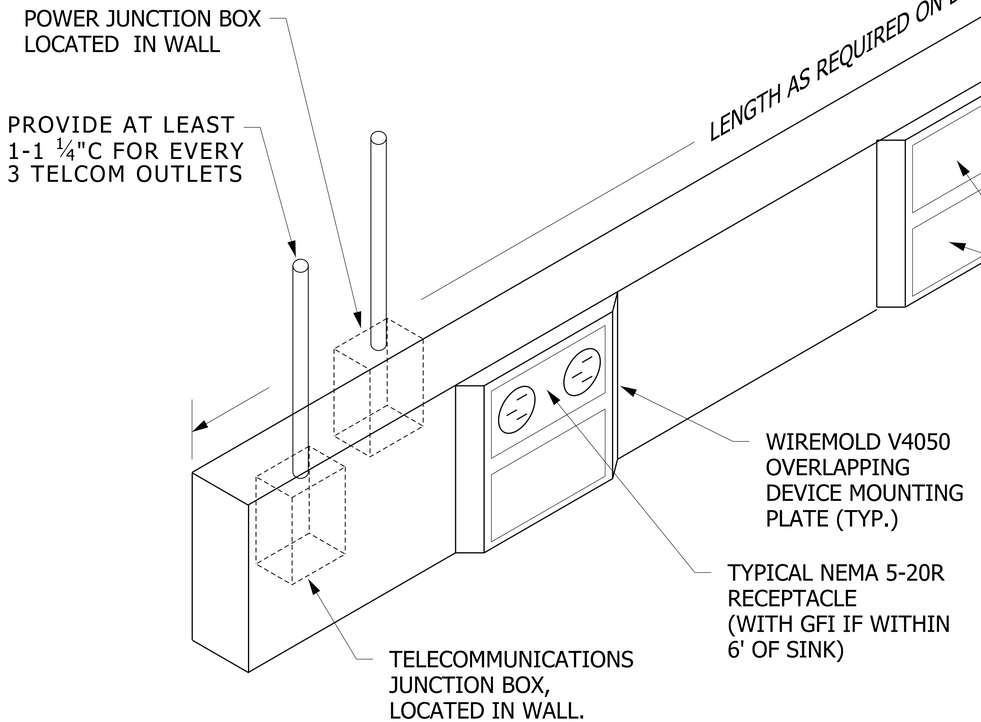

NOTE:
PART NUMBERS ARE FOR USE WITH
WIREMOLD V4000 RACEWAY.

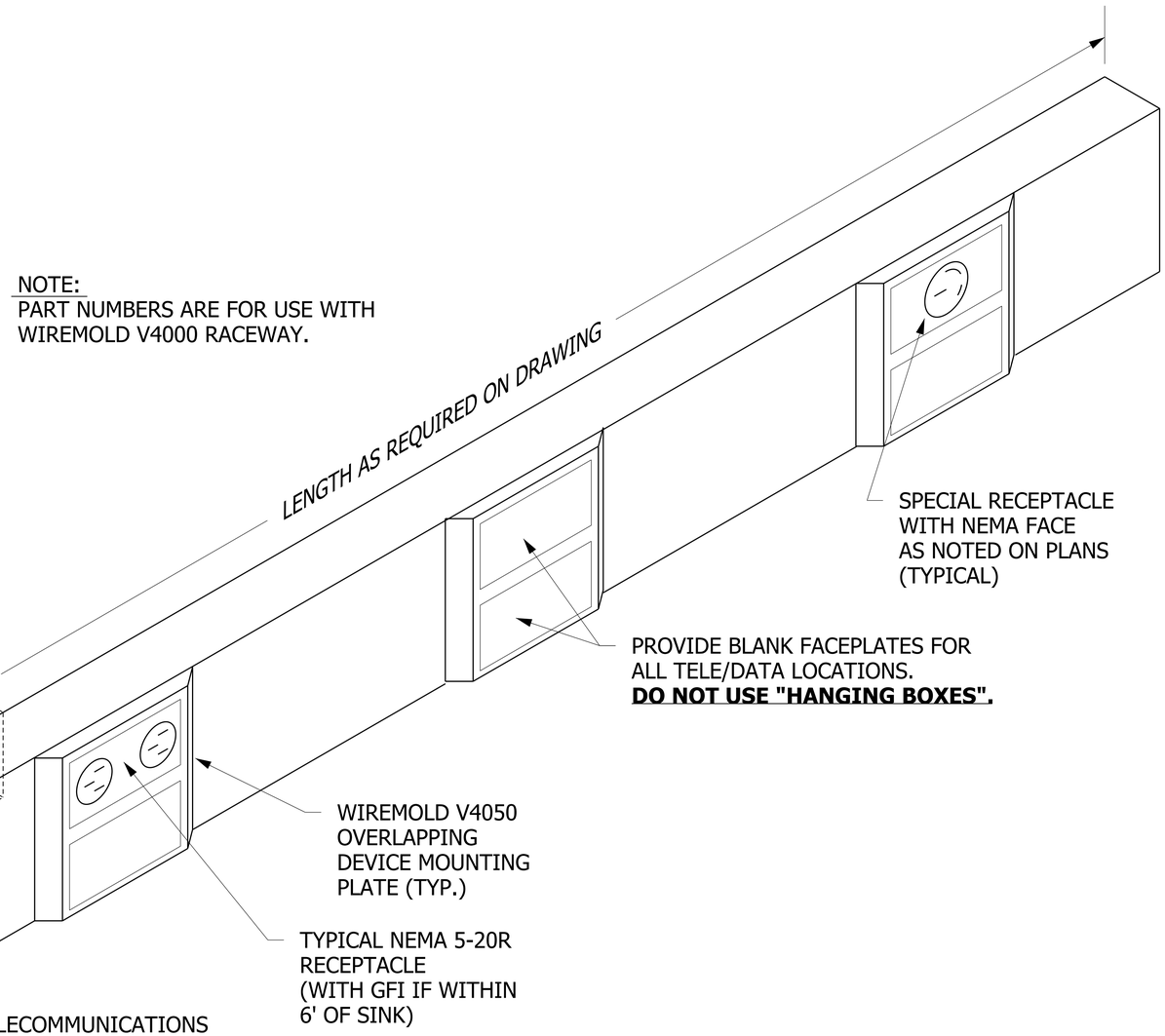

INSTALLATION DETAIL - FOR NEW WALLS
TYPICAL DUAL CHANNEL METAL SURFACE RACEWAY

NO SCALE

26053314.dgn

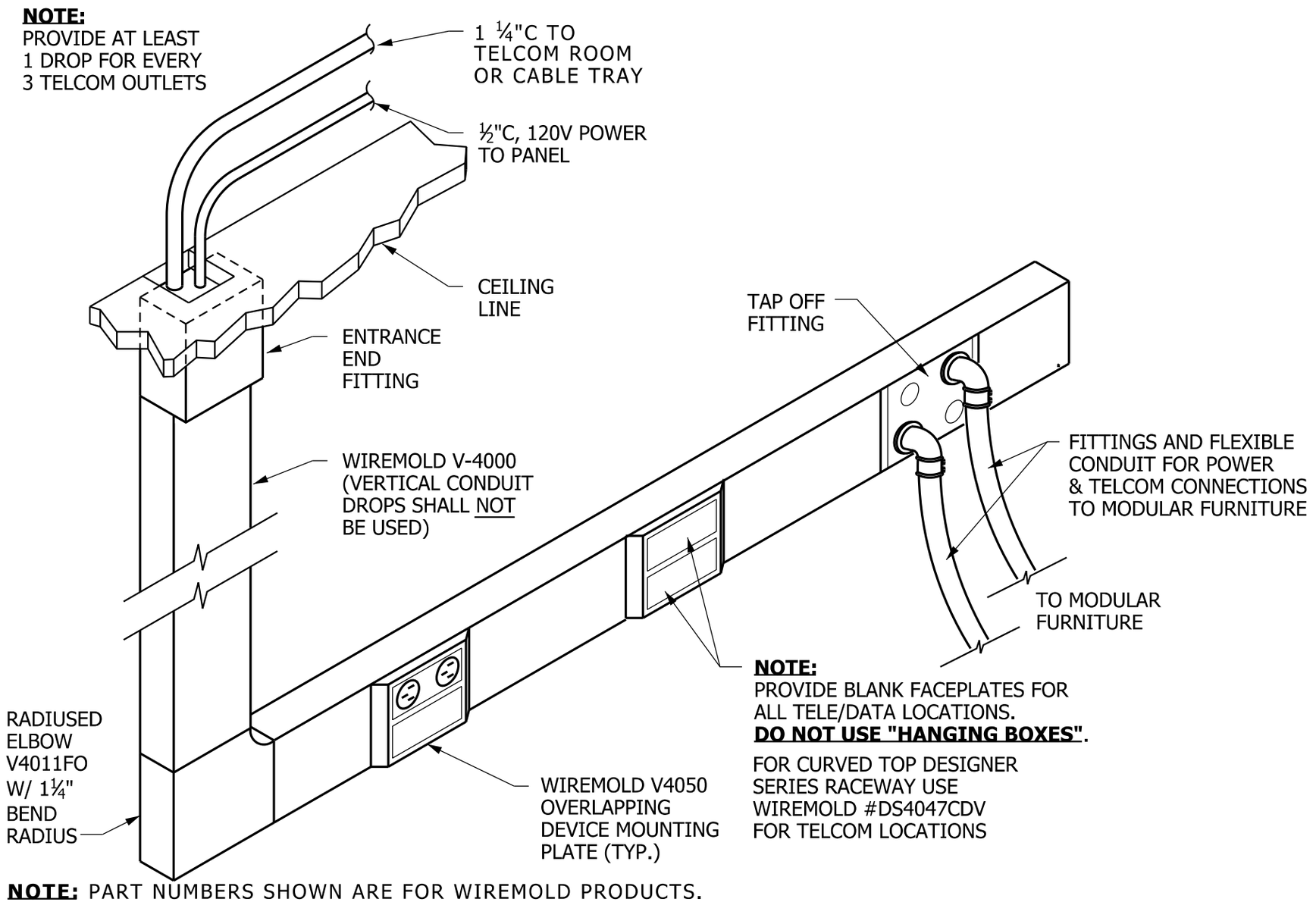

NOTE: PART NUMBERS SHOWN ARE FOR WIREMOLD PRODUCTS. OTHER APPROVED MANUFACTURERS ARE HUBBELL AND THOMAS & BETTS.

DUAL CHANNEL METAL RACEWAY W/ MODULAR FURNITURE FEED DETAIL

NO SCALE

26053315.dgn

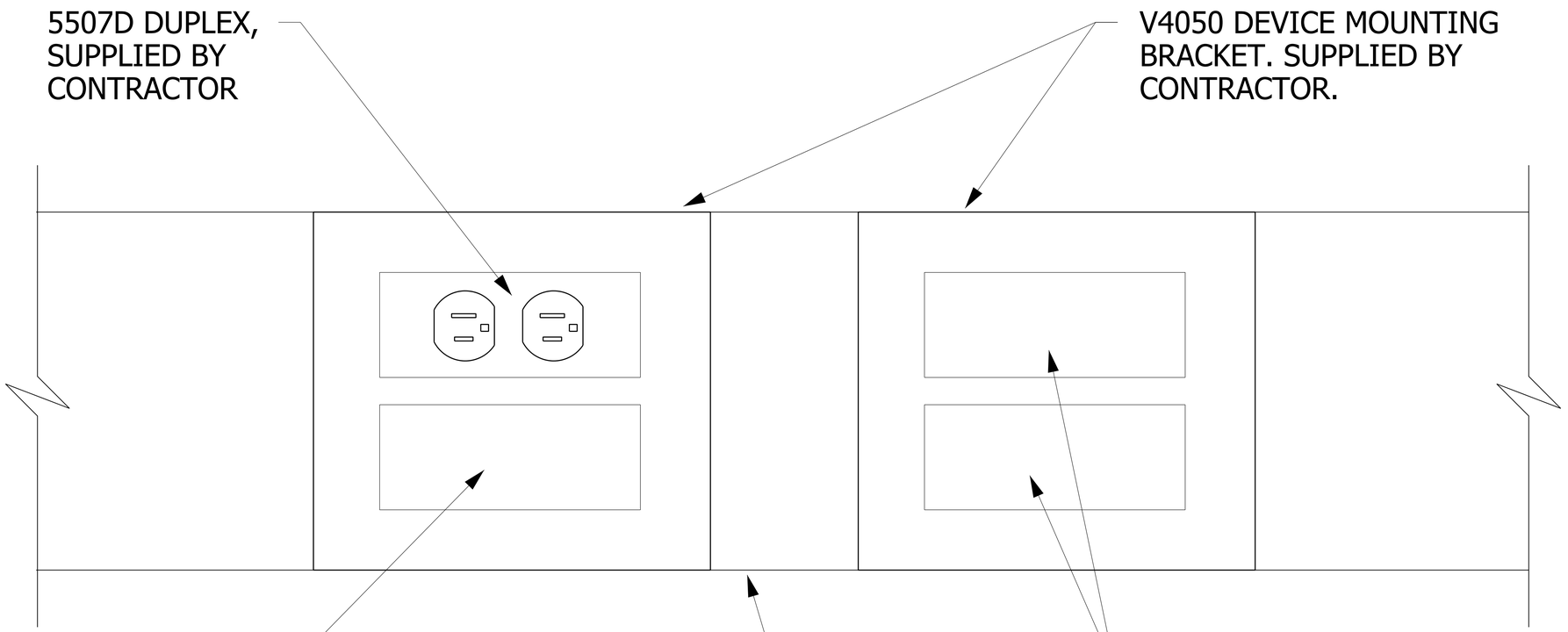

NOTE:
PART #'S ARE FROM WIREMOLD CO.

DUAL CHANNEL
METAL RACEWAY FACE PLATE DETAILS

NO SCALE

26053316.dgn

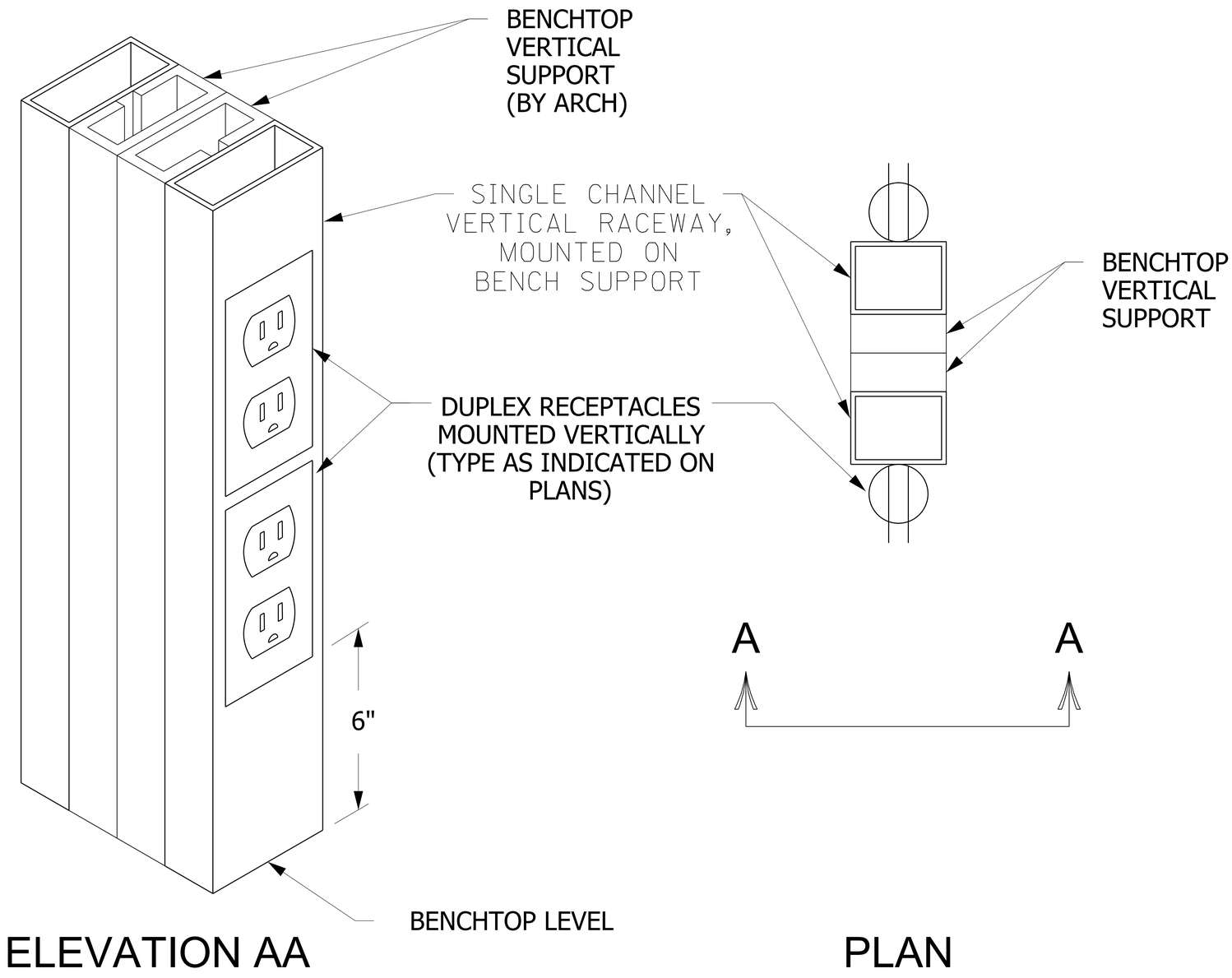

ELEVATION AA

PLAN

TYPICAL FOR ALL VERTICAL UNISTRUT ON BENCHES WITH DUPLEX RECEPTACLE SHOWN

BENCHTOP VERTICAL INSTALLATION DETAIL

NO SCALE

26053317.dgn

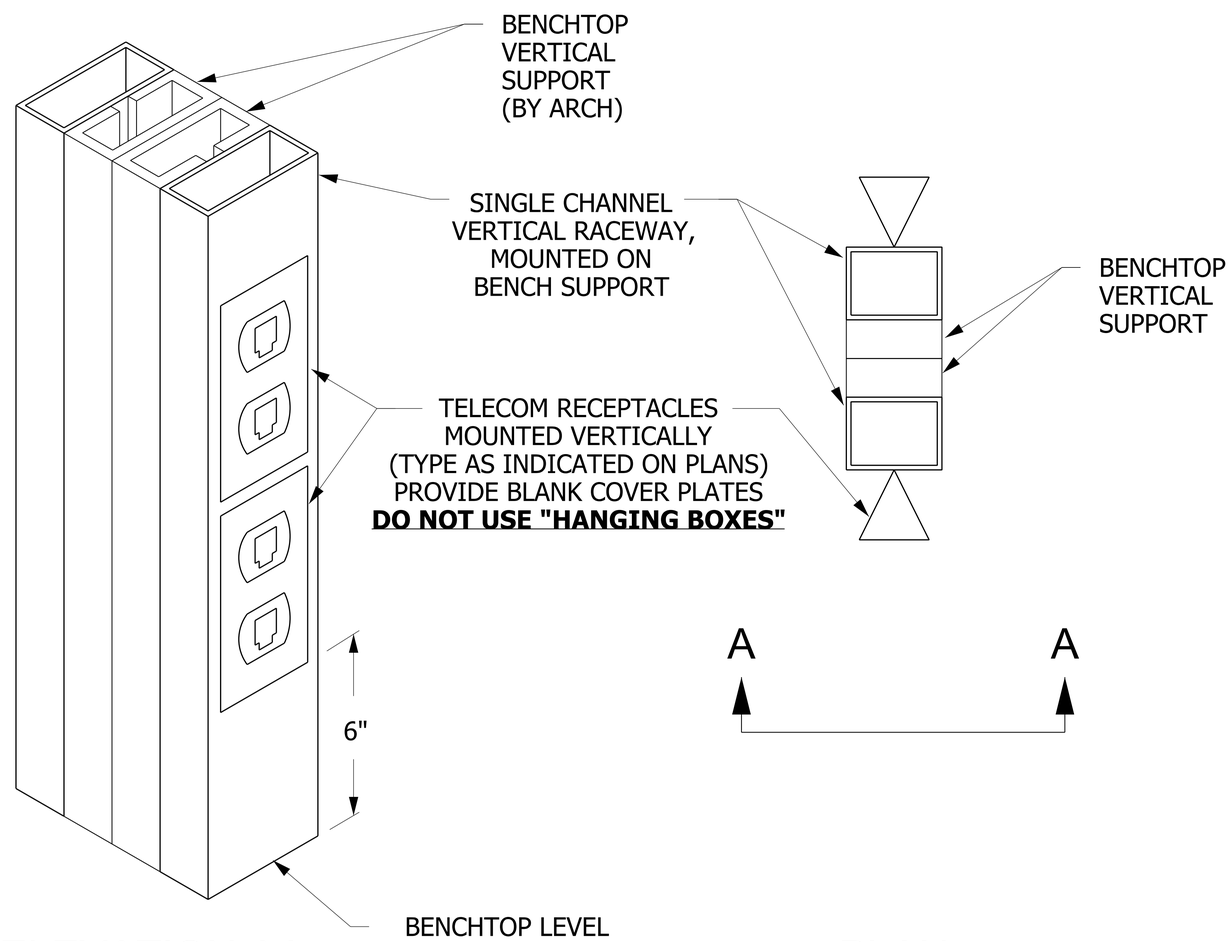

ELEVATION AA PLAN

TYPICAL FOR ALL VERTICAL UNISTRUT ON BENCHES WITH TELECOM RECEPTACLE SHOWN

BENCHTOP VERTICAL RACEWAY INSTALLATION

NO SCALE

26053318.dgn

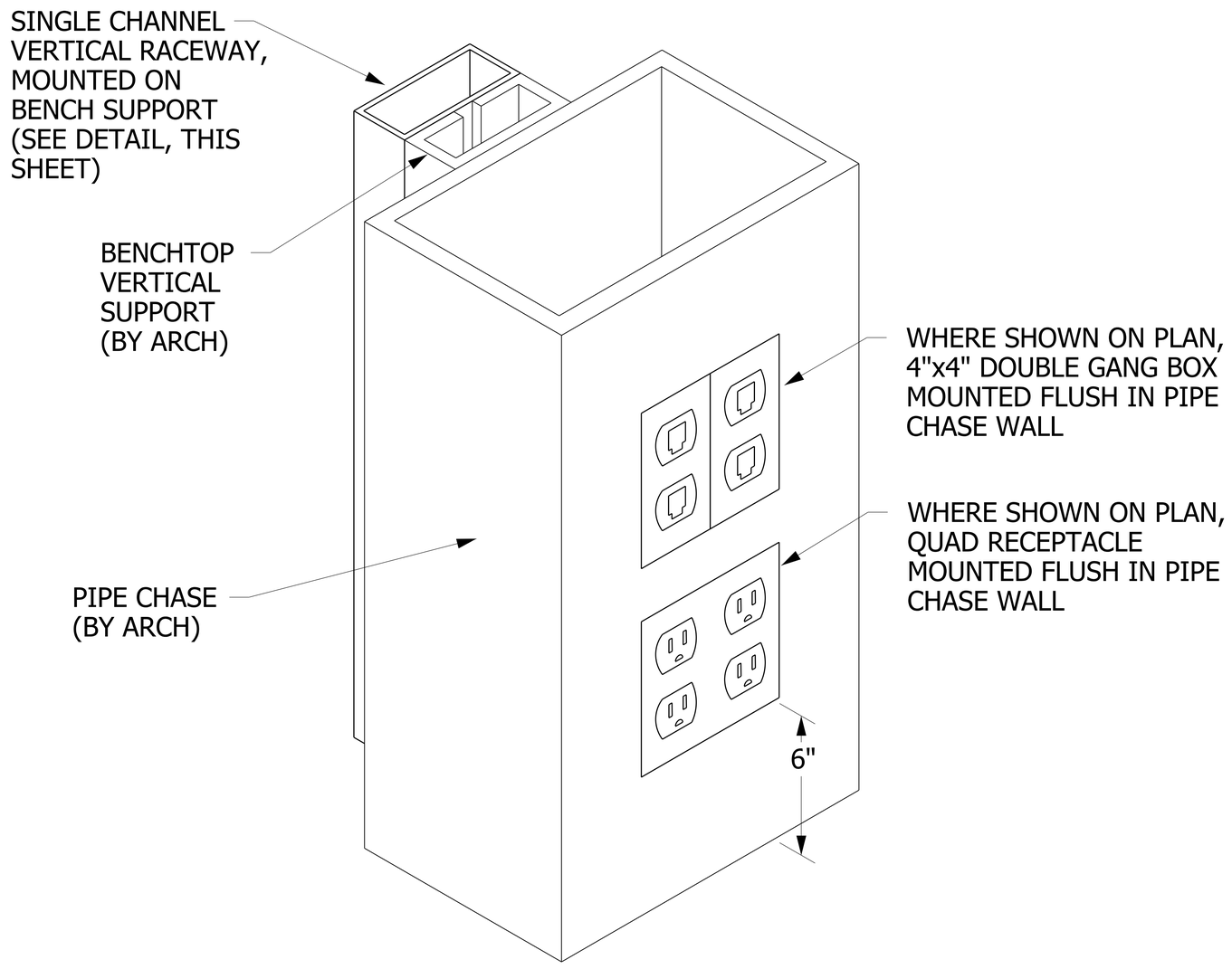

TYPICAL FOR ALL BENCHES WITHOUT SINKS

END OF BENCH VERTICAL RACEWAY & DATA RECEPTACLE INSTALLATION

NO SCALE

26053319.dgn

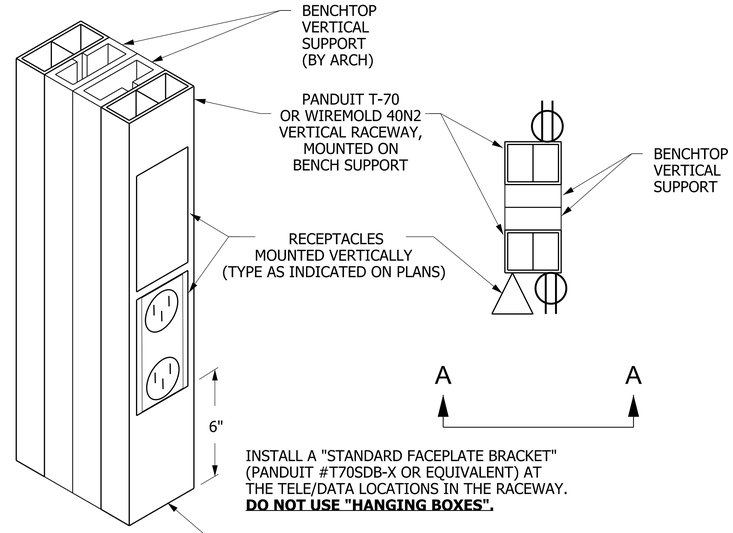

BENCHTOP
VERTICAL PLASTIC RACEWAY INSTALLATION

NO SCALE

26053320.dgn

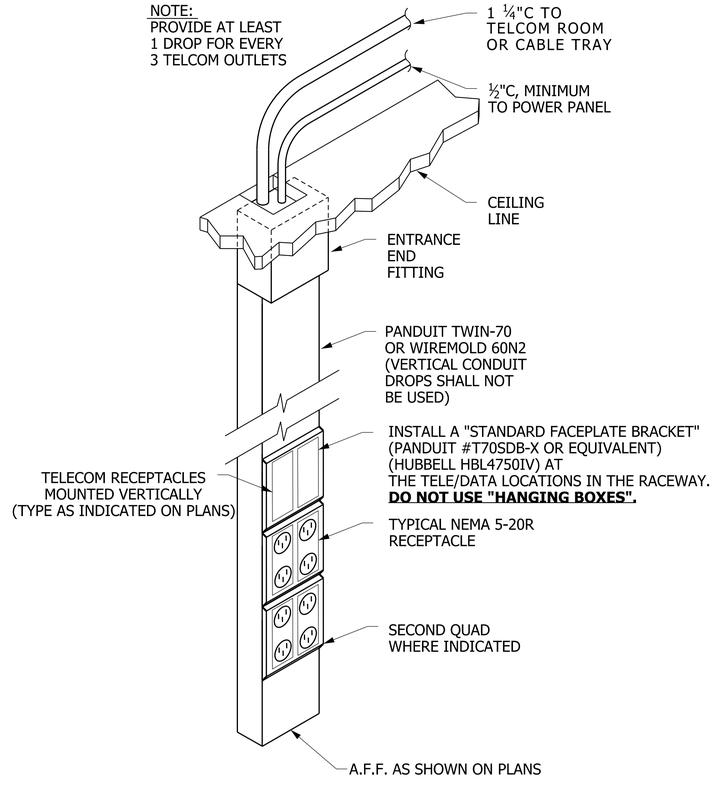

INSTALLATION DETAIL - FOR EXISTING WALLS
TYPICAL DUAL CHANNEL PLASTIC RACEWAY

NO SCALE

26053320.dgn

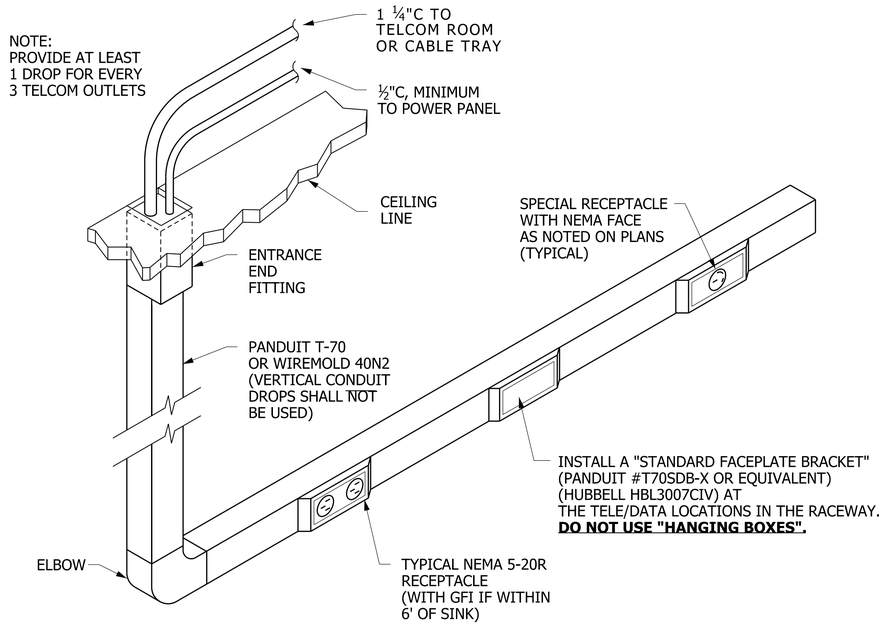

INSTALLATION DETAIL - FOR EXISTING WALLS
TYPICAL DUAL CHANNEL PLASTIC RACEWAY

NO SCALE

26053320.dgn

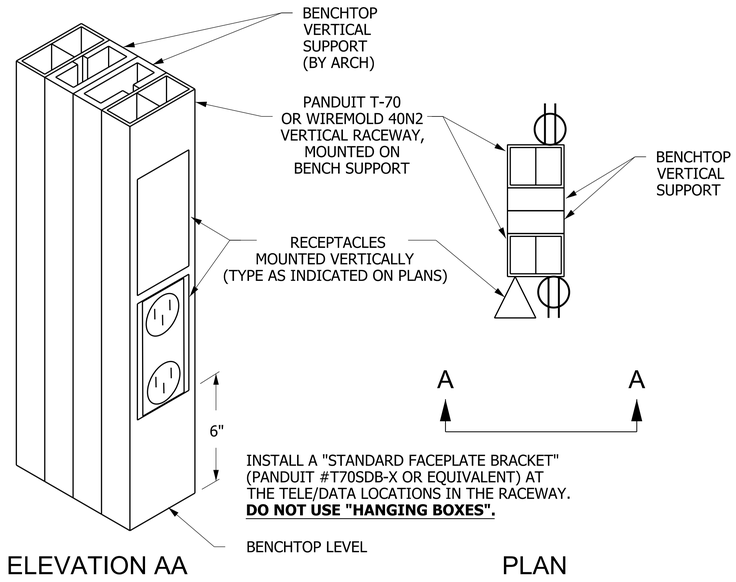

BENCHTOP
VERTICAL PLASTIC RACEWAY INSTALLATION

NO SCALE

26053321.dgn

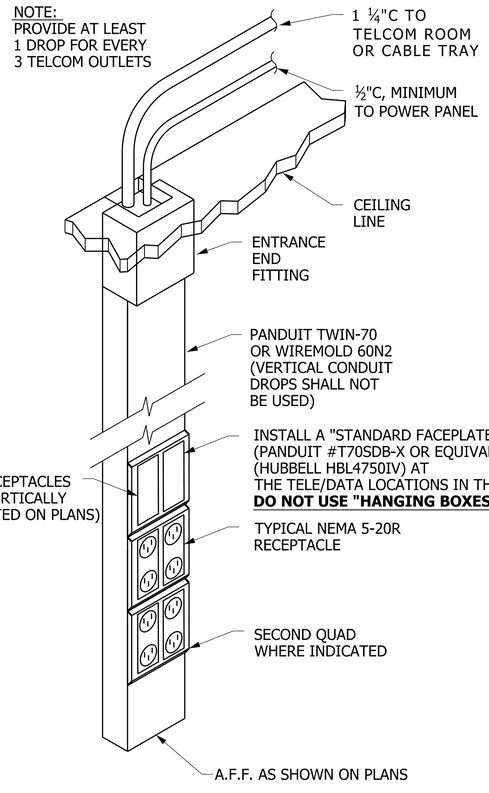

INSTALLATION DETAIL - FOR EXISTING WALLS
TYPICAL DUAL CHANNEL PLASTIC RACEWAY

NO SCALE

26053321.dgn

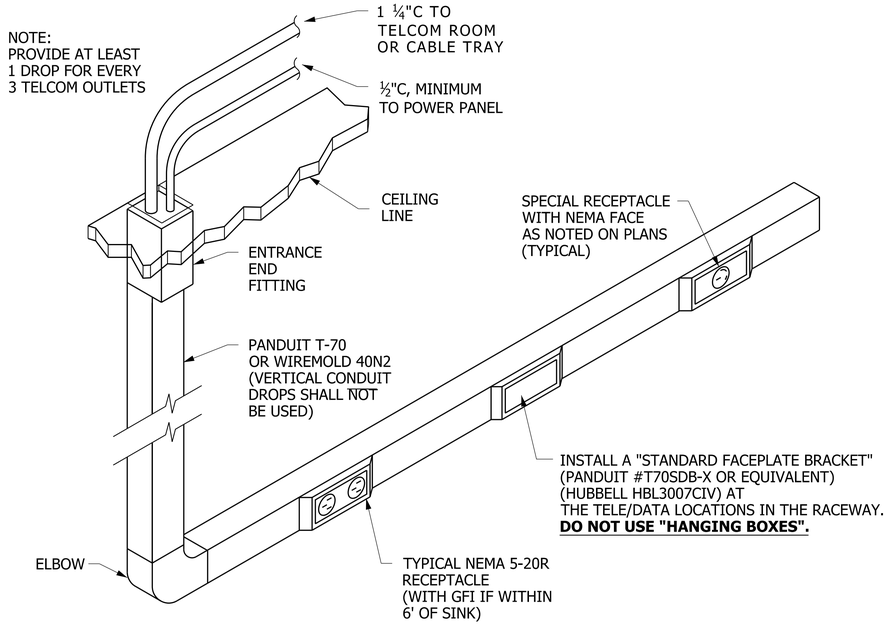

INSTALLATION DETAIL - FOR EXISTING WALLS
TYPICAL DUAL CHANNEL PLASTIC RACEWAY

NO SCALE

26053321.dgn

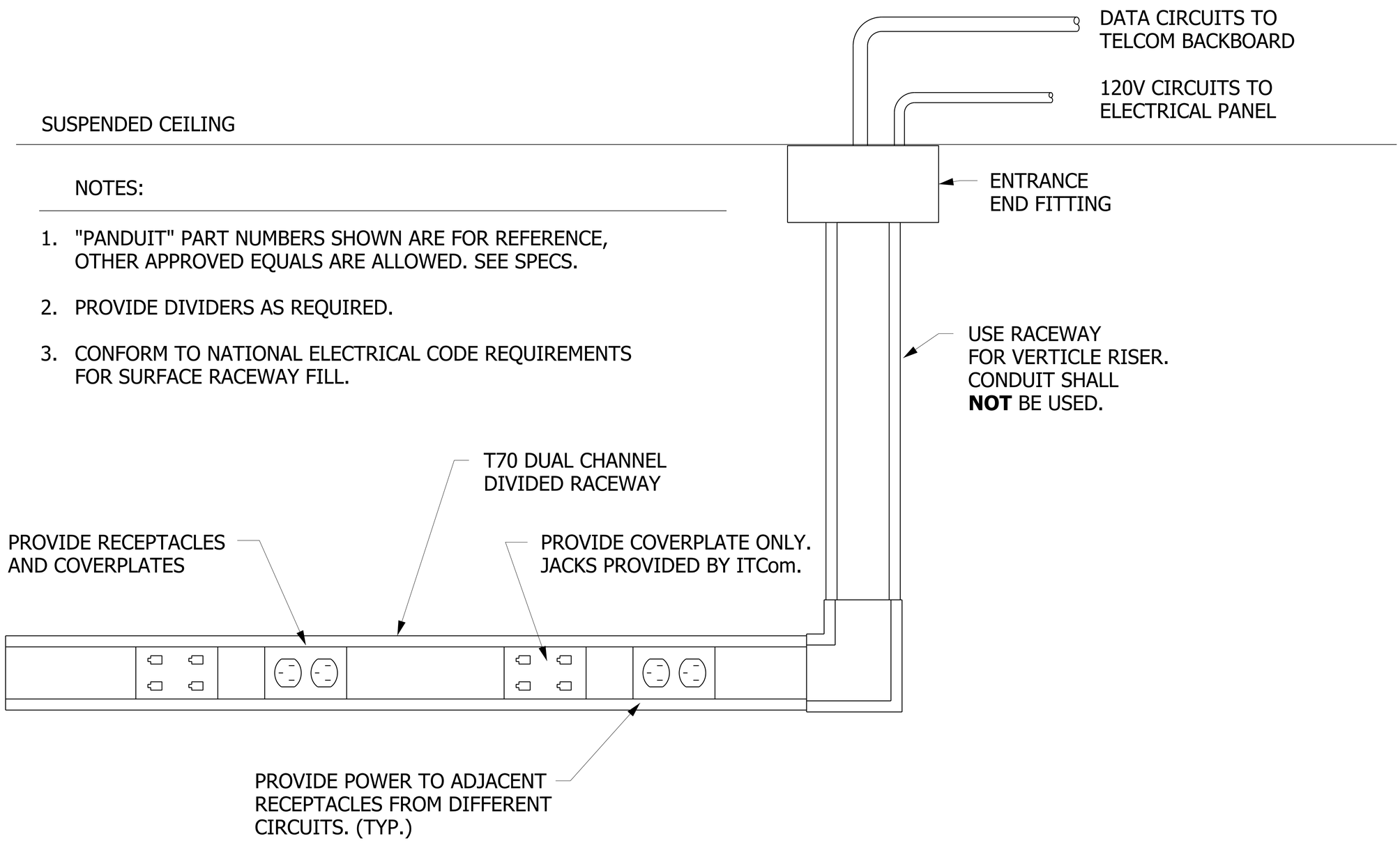

NOTES:

1. "PANDUIT" PART NUMBERS SHOWN ARE FOR REFERENCE, OTHER APPROVED EQUALS ARE ALLOWED. SEE SPECS.
2. PROVIDE DIVIDERS AS REQUIRED.
3. CONFORM TO NATIONAL ELECTRICAL CODE REQUIREMENTS FOR SURFACE RACEWAY FILL.

NON-METALLIC SURFACE RACEWAY DETAIL

NO SCALE

26053322.dgn

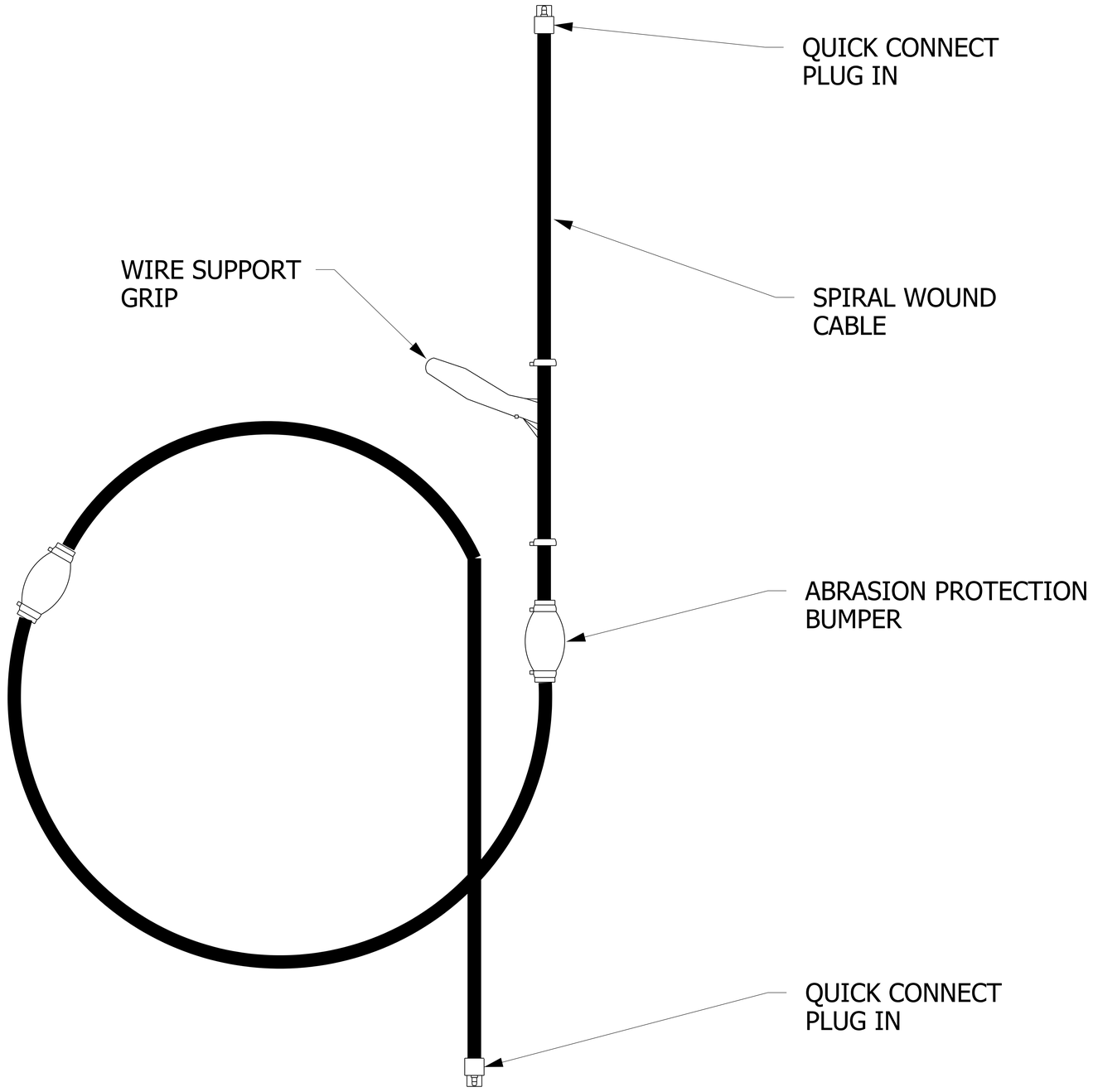

WIRE HARNESS

NO SCALE

26053323.dgn

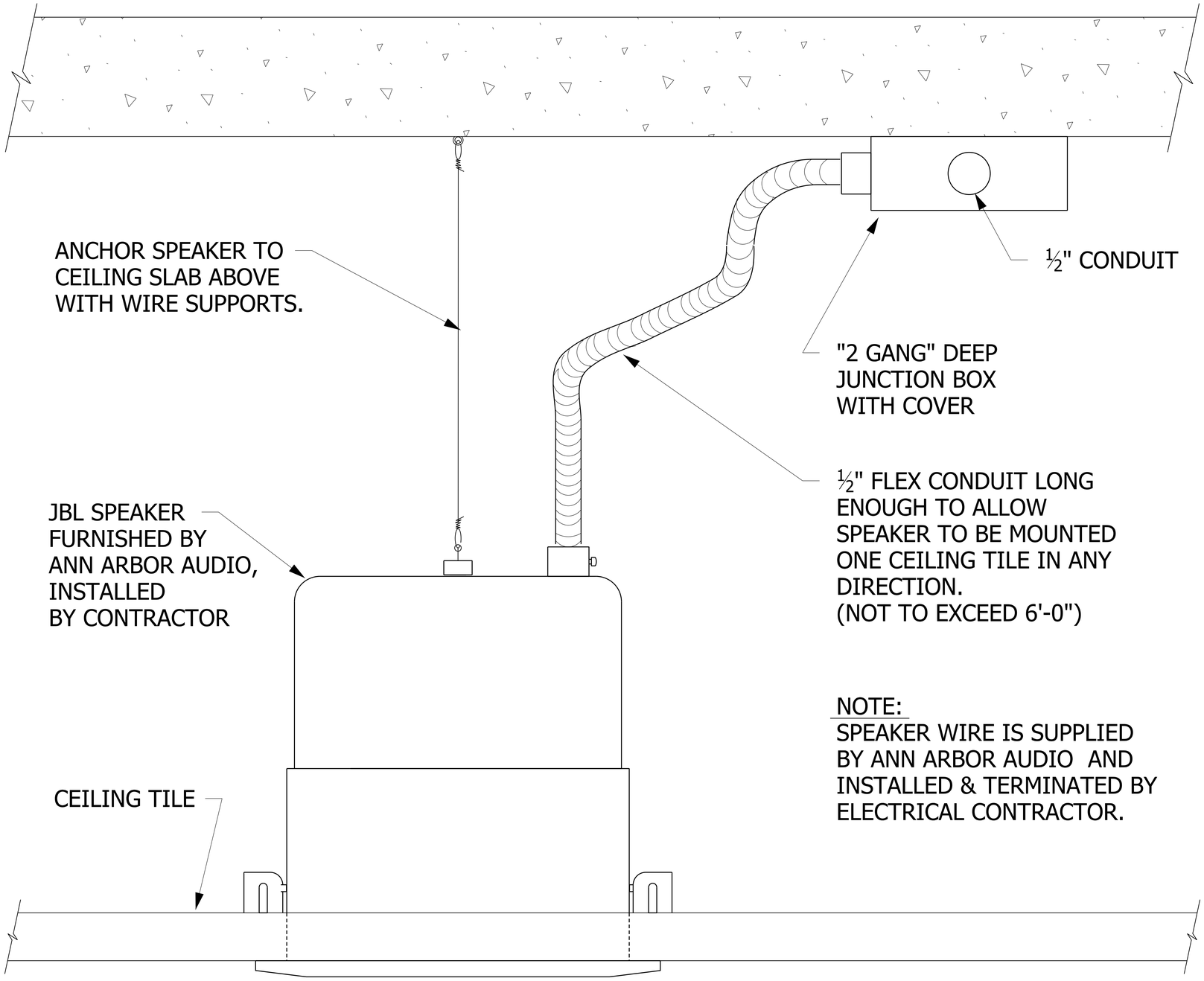

NOTE:
SPEAKER WIRE IS SUPPLIED BY ANN ARBOR AUDIO AND INSTALLED & TERMINATED BY ELECTRICAL CONTRACTOR.

SPEAKER MOUNTING DETAIL

NO SCALE

26053324.dgn

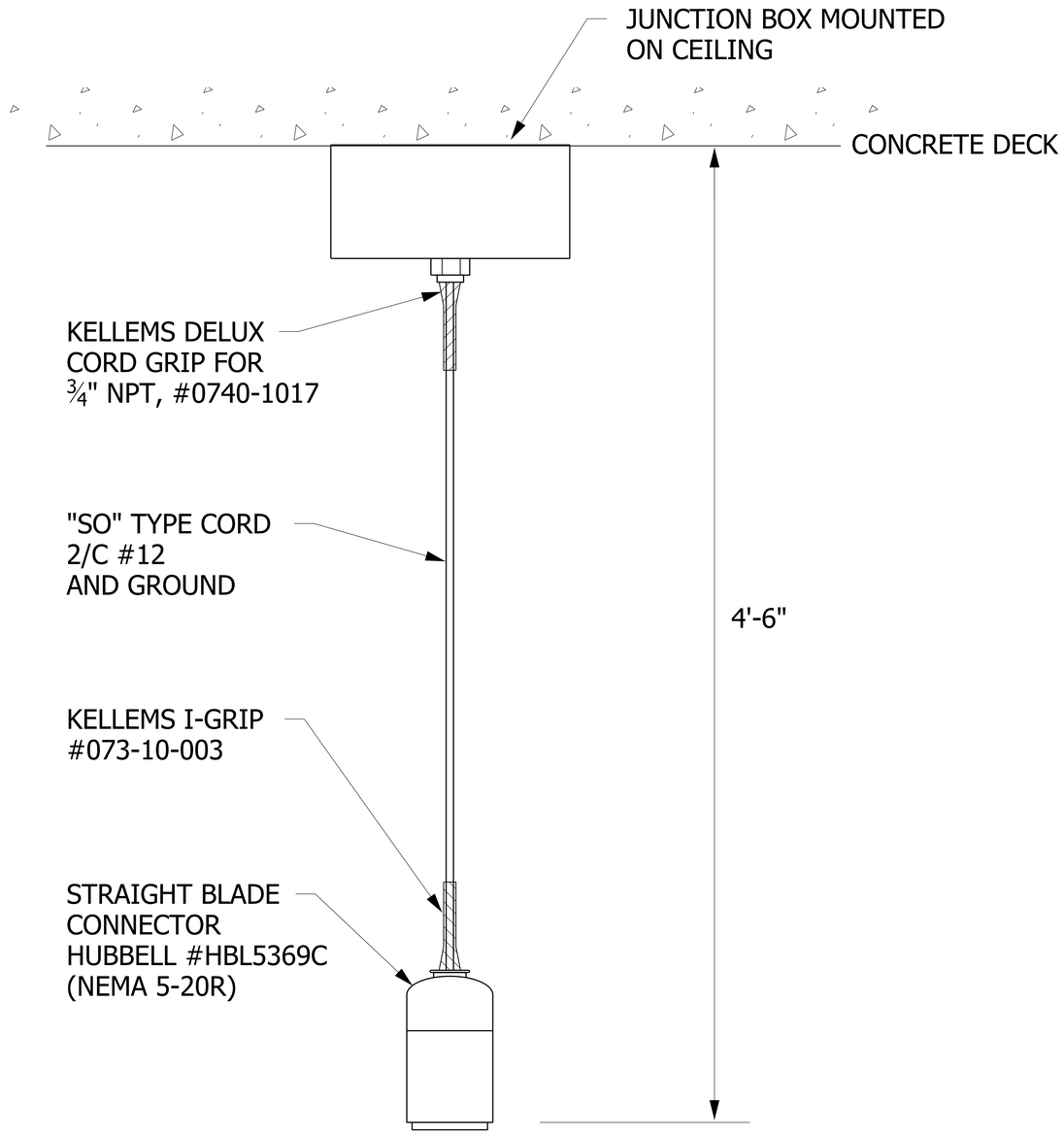

HANGING RECEPTACLE INSTALLATION DETAIL

NO SCALE

26053325.dgn

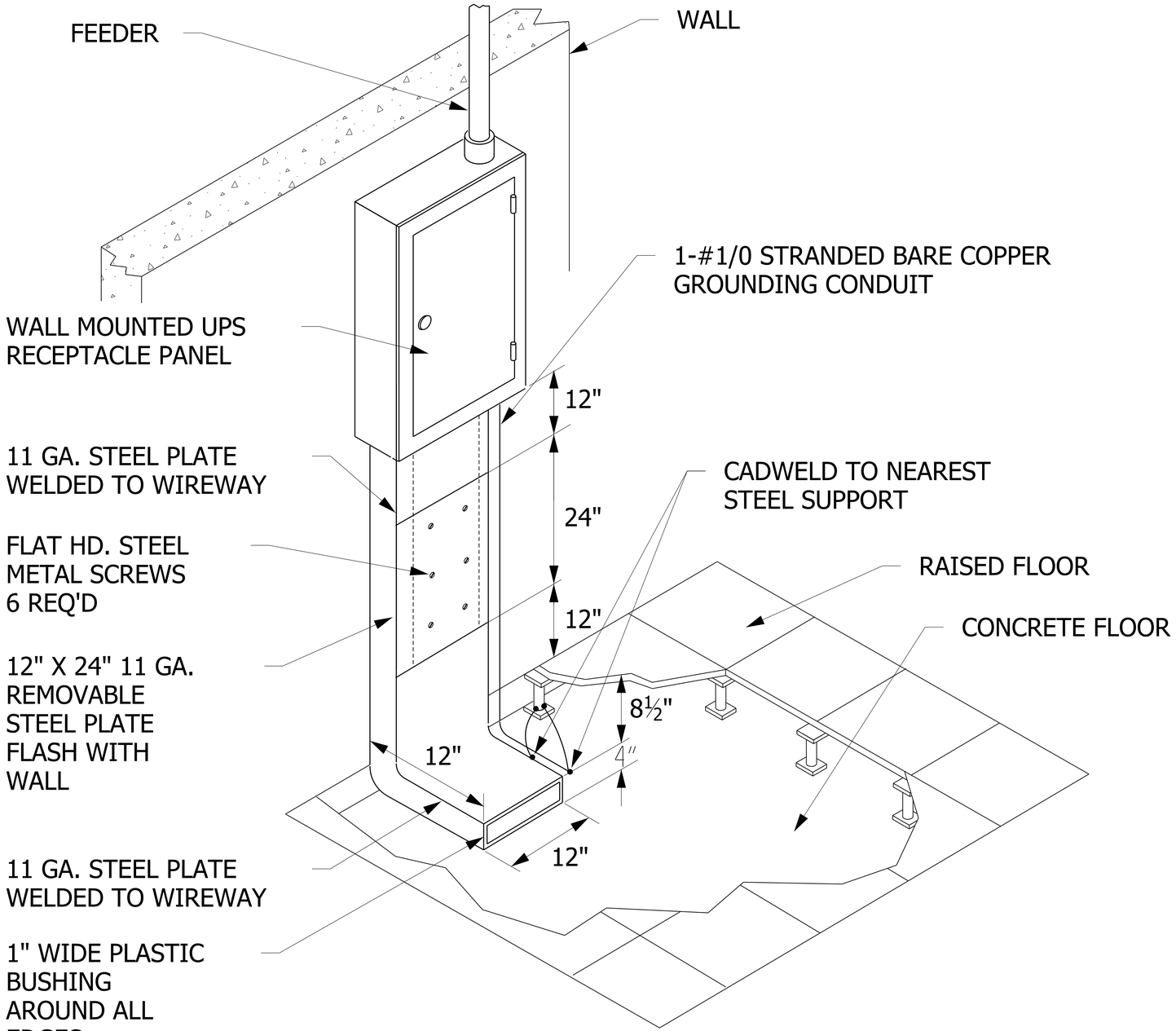

WALL MOUNTED UPS RECEPTACLE PANEL DETAIL

NO SCALE

26053328.001

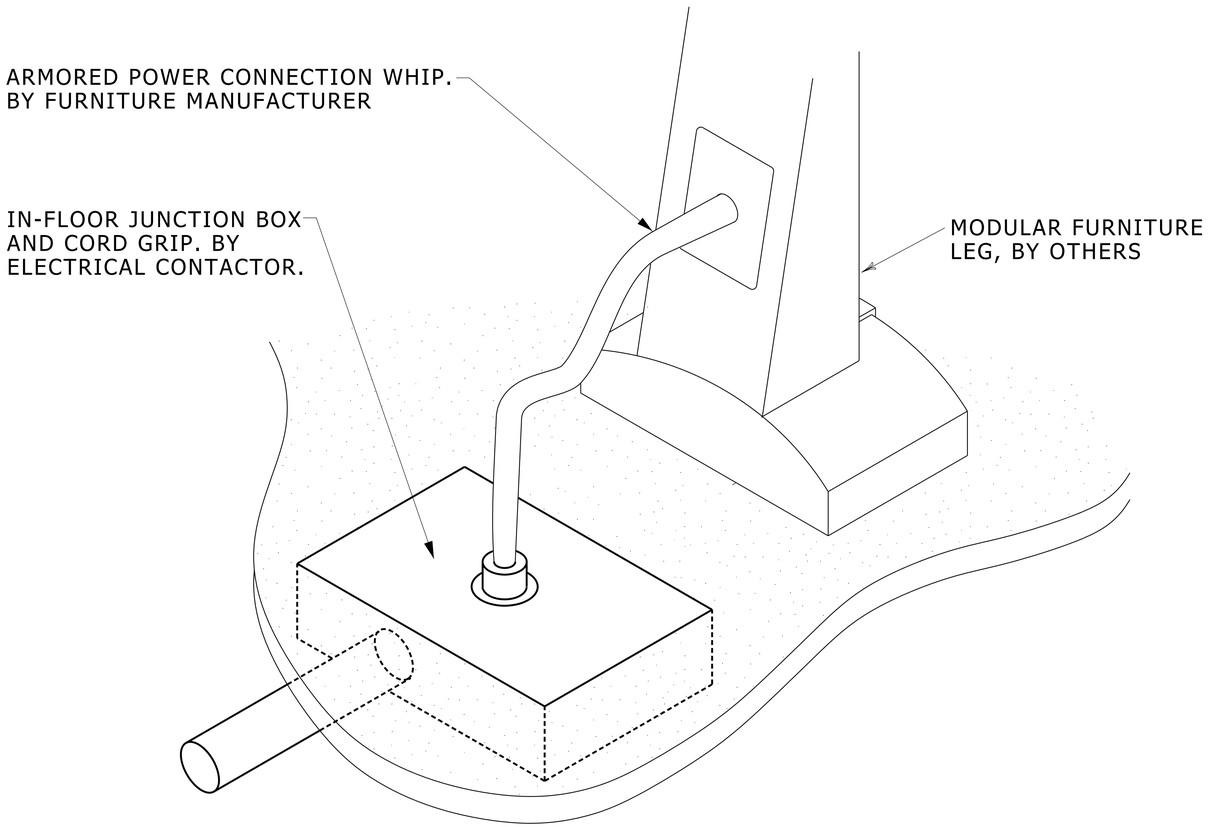

POWER/FURNITURE INTERFACE DETAIL

N.T.S.

26053329.dgn

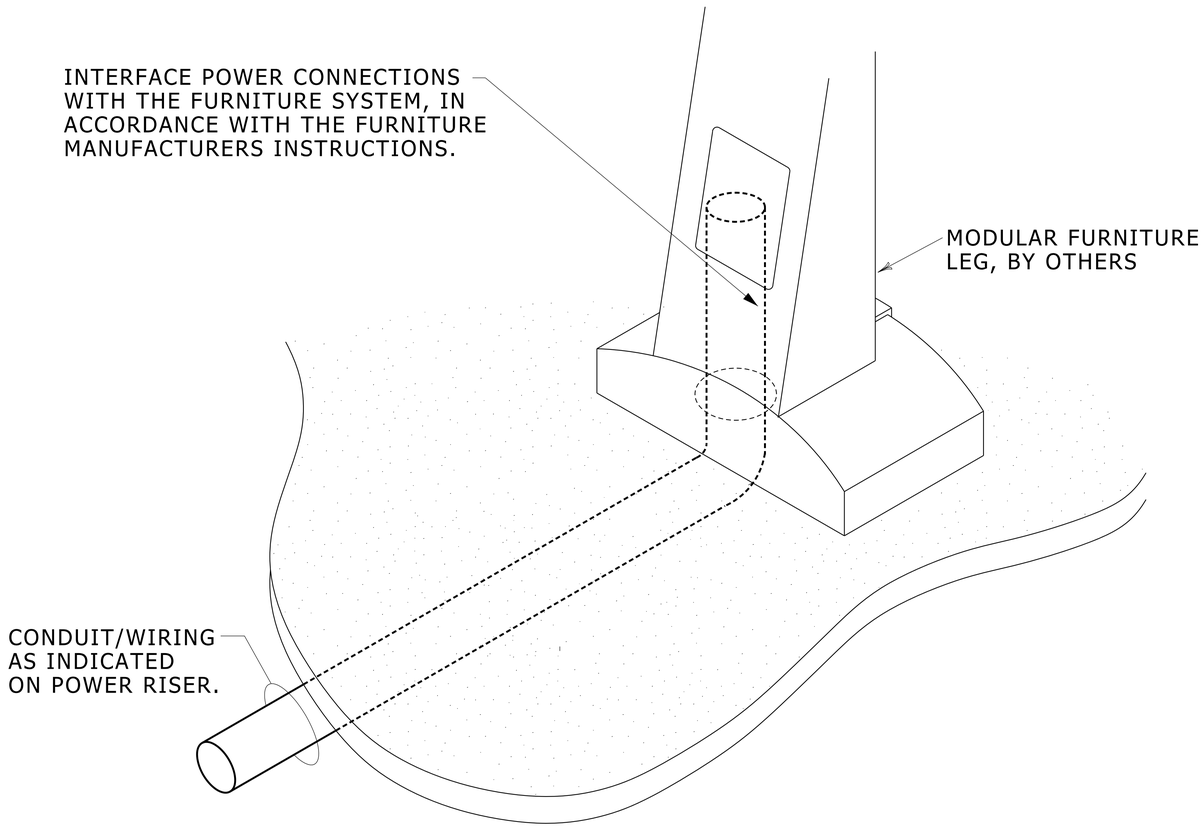

POWER/FURNITURE INTERFACE DETAIL

N.T.S.

26053329.dgn

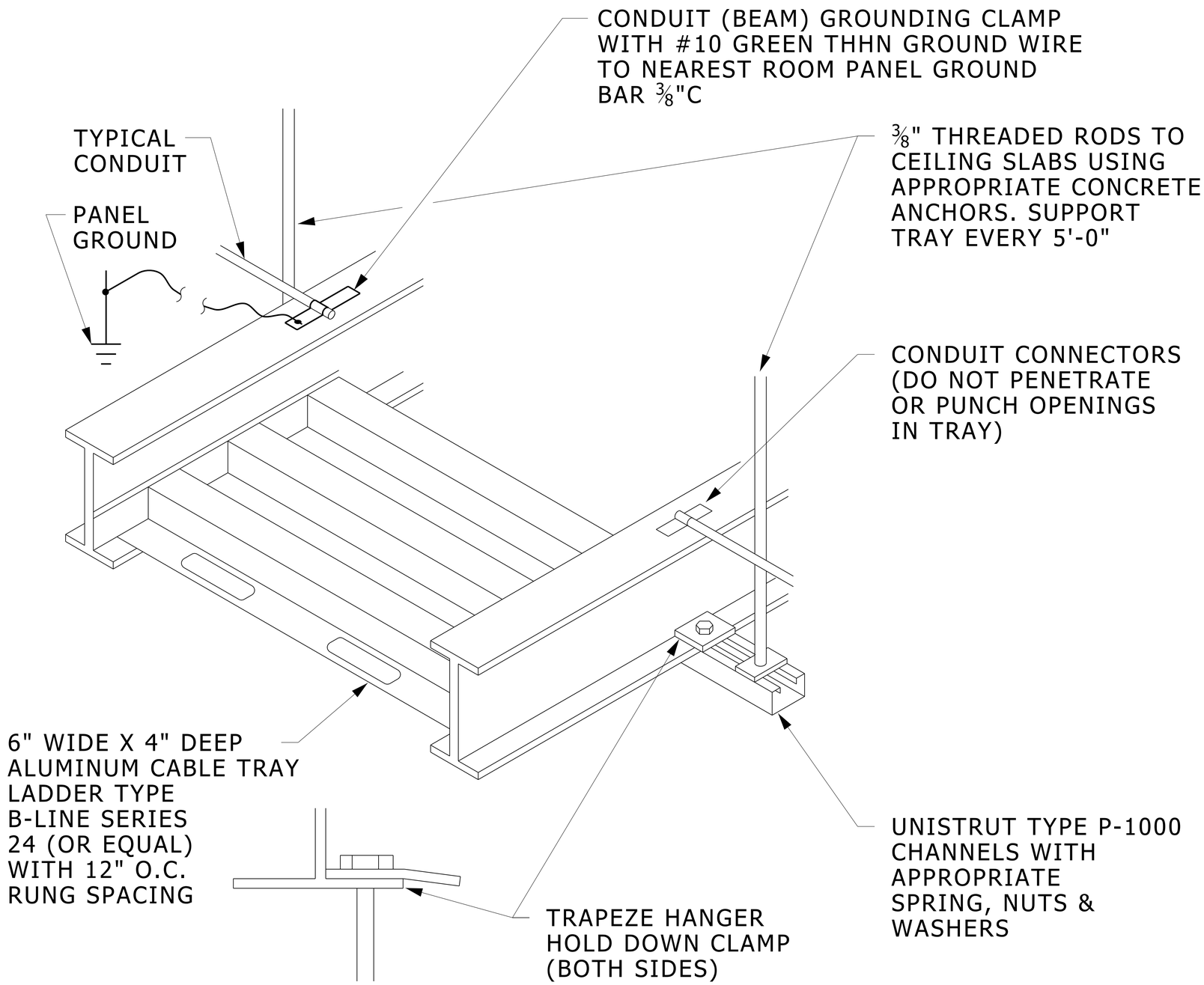

CABLE TRAY MOUNTING DETAIL

NO SCALE

26053330.dgn

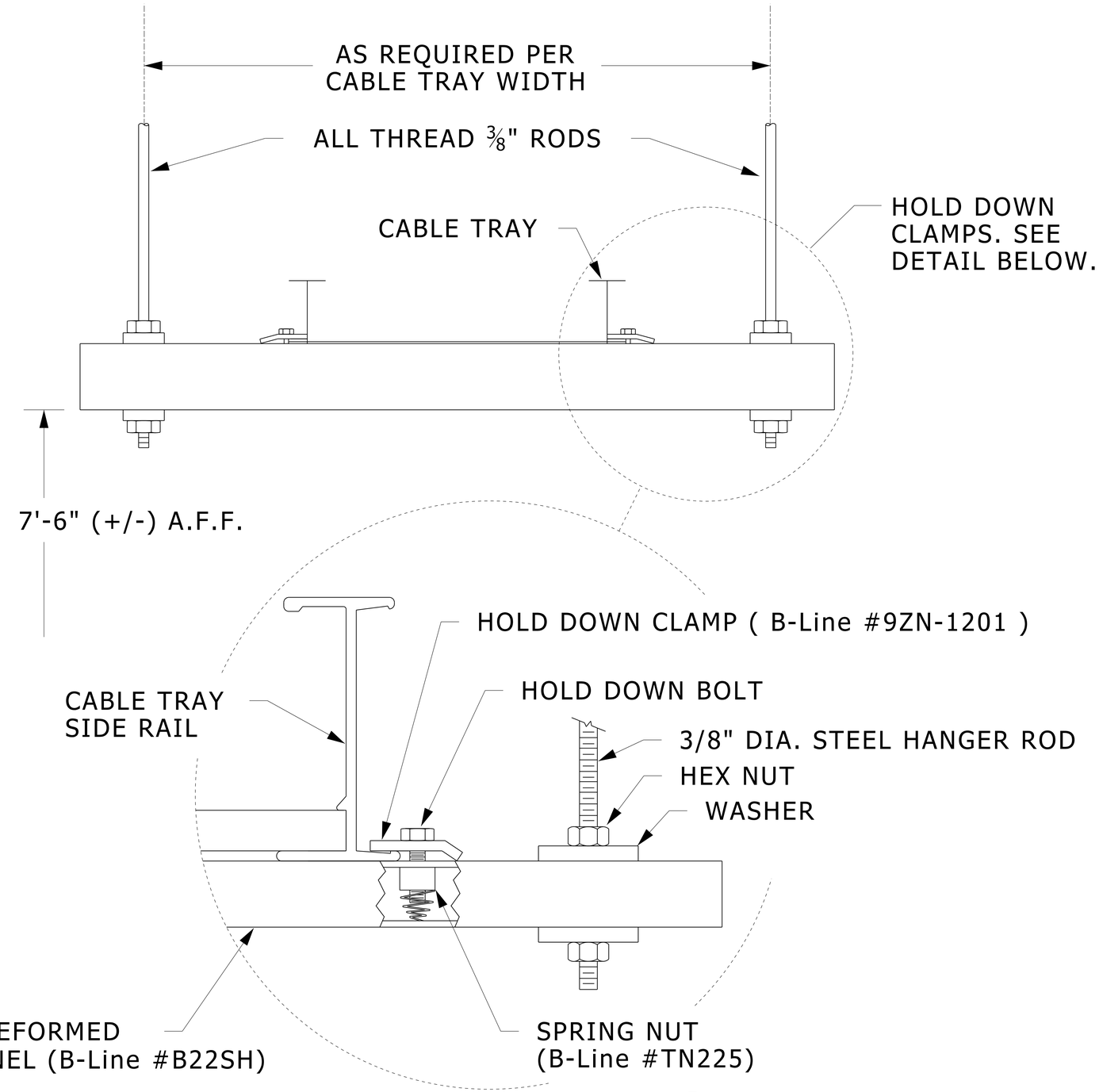

CABLE TRAY TRAPEZE HANGER DETAIL

NO SCALE

26053331.dgn

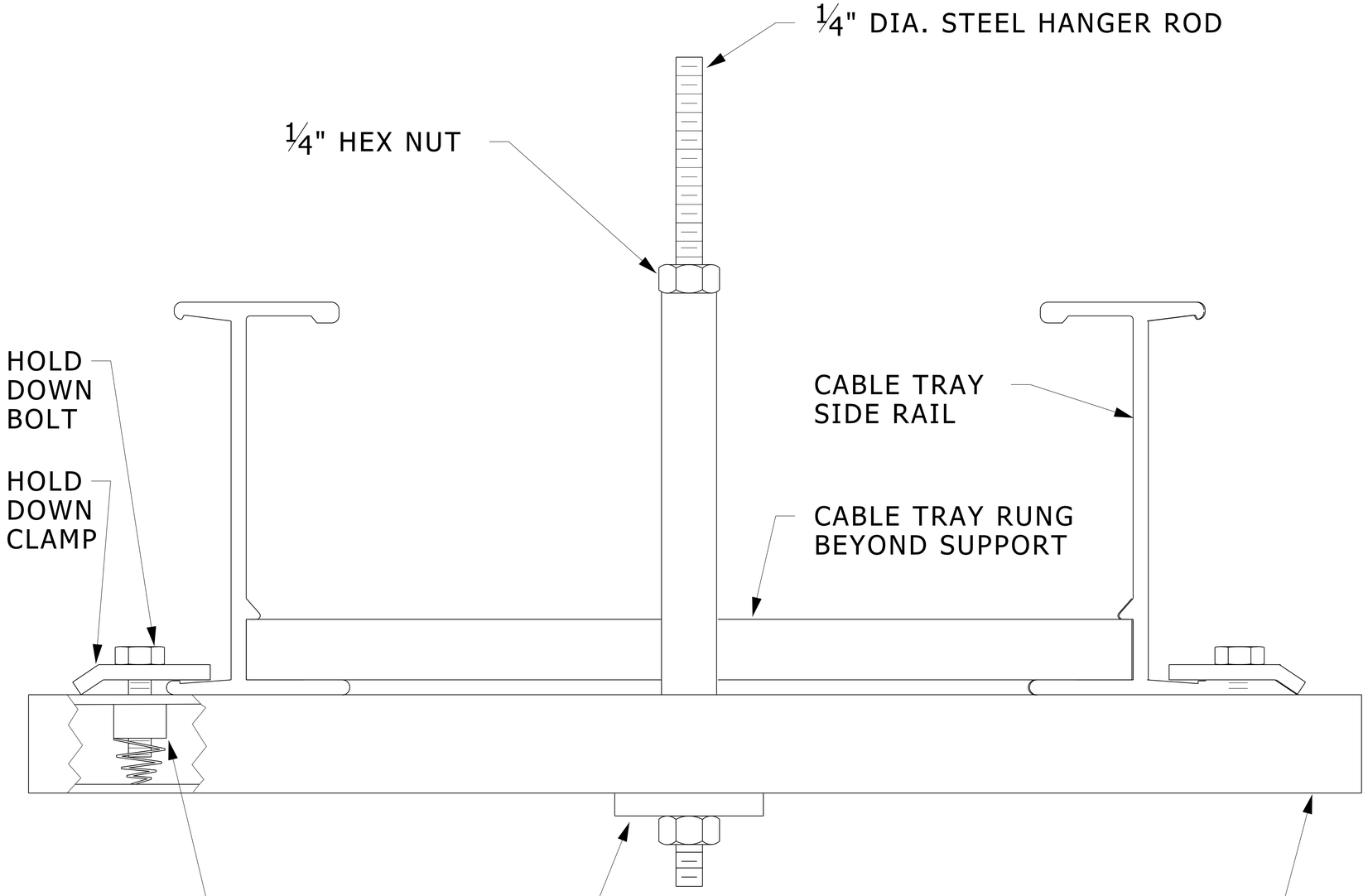

CENTER HUNG CABLE TRAY DETAIL

NO SCALE

26053332.dgn

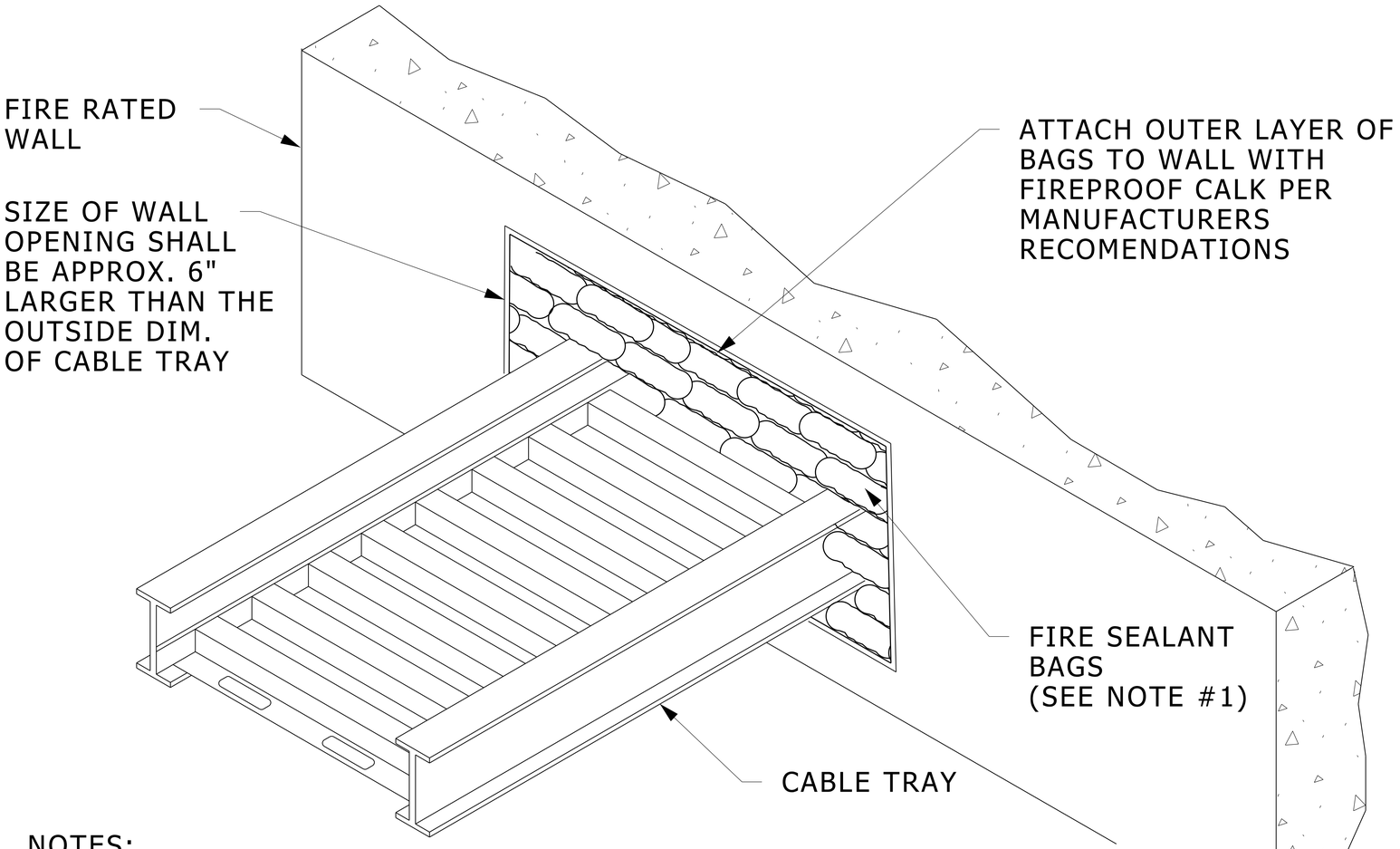

NOTES:

1. BAGS SHALL BE: GRACE CONSTRUCTION PRODUCTS KBS SEALBAGS OR 3M FIRE BARRIER PILLOWS.

2. INSTALL BAGS PER MANUFACTURERS INSTRUCTIONS TO ACHIEVE UL CLASSIFIED FIRE RATING EQUAL TO OR GREATER THAN FIRE RATING OF WALL.

3. SCHEDULE INSTALLATION FOR END OF PROJECT TO ALLOW OTHERS TIME TO INSTALL CABLES.

CABLE TRAY PENETRATION THROUGH FIRE RATED WALL

NO SCALE

26053333.dgn

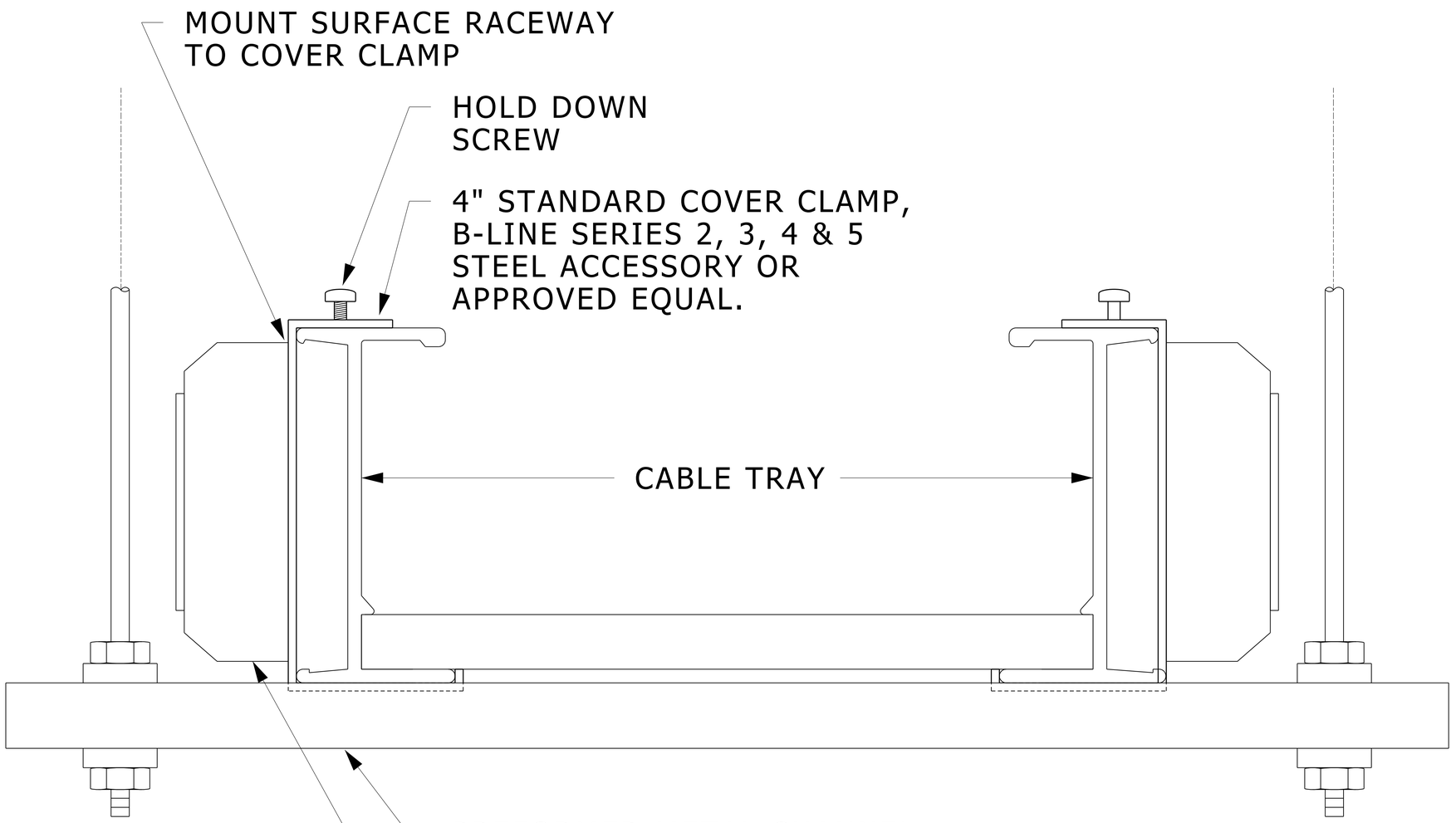

CABLE TRAY MOUNTED SURFACE RACEWAY

NO SCALE

26053334.dgn

NOTES:

1. LIGHT FIXTURE FURNISHED WITH HOOD & WIRED BY ELECTRICAL CONTRACTOR. (ELECTRICAL CONTRACTOR TO PROVIDE LAMPS)
2. AIR MONITOR. (BY MECHANICAL)
3. 20A, 120V GFCI DUPLEX RECEPTACLE FURNISHED WITH HOOD & WIRED BY ELECTRICAL CONTRACTOR.
4. ¾" FLEXIBLE STEEL CONDUIT INSIDE OF HOOD. (BY ELECTRICAL CONTRACTOR)
5. JUNCTION BOX IN HOOD. CONFIRM EXACT LOCATION USING SHOP DRAWINGS AND/OR HOOD.
6. LIGHT SWITCH FURNISHED WITH HOOD & WIRED BY ELECTRICAL CONTRACTOR.
7. 2-#12 & 1-#12 GND,¾"C. DEDICATED 120V CIRCUIT FOR AIR MONITOR.
8. 2-#12 & 1-#12 GND,¾"C. TO PANEL, BY ELECTRICAL CONTRACTOR. (SEE PLANS)
9. CIRCUIT MAY BE ROUTED IN SAME CONDUIT AS OTHER HOOD CIRCUIT.

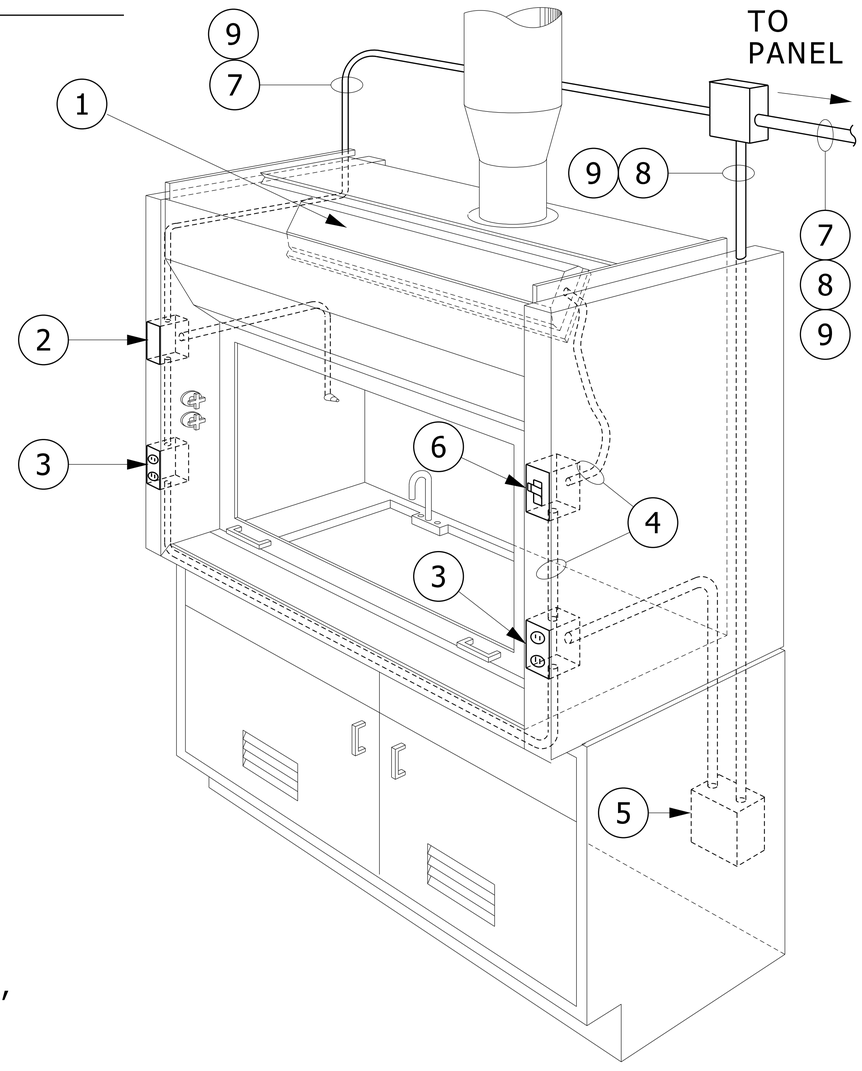

FUME HOOD ELECTRICAL SERVICE

NO SCALE

26053335.dgn

NOTES:

1. LIGHT FIXTURE FURNISHED WITH HOOD & WIRED BY ELECTRICAL CONTRACTOR. (ELECTRICAL CONTRACTOR TO PROVIDE LAMPS)
2. AIR MONITOR. (BY MECHANICAL)
3. 20A, 120V GFCI DUPLEX RECEPTACLE FURNISHED WITH HOOD & WIRED BY ELECTRICAL CONTRACTOR.
4. 3/4" FLEXIBLE STEEL CONDUIT INSIDE OF HOOD. (BY ELECTRICAL CONTRACTOR)
5. JUNCTION BOX IN HOOD. CONFIRM EXACT LOCATION USING SHOP DRAWINGS AND/OR HOOD.
6. LIGHT SWITCH FURNISHED WITH HOOD & WIRED BY ELECTRICAL CONTRACTOR.
7. 2-#12 & 1-#12 GND, 3/4"C. DEDICATED 120V CIRCUIT FOR AIR MONITOR.
8. 2-#12 & 1-#12 GND, 3/4"C. TO LIGHT AND RECEPTACLE.
9. CIRCUIT MAY BE ROUTED IN SAME CONDUIT AS OTHER HOOD CIRCUIT.
10. 20A 208V OUTLET FURNISHED WITH HOOD AND WIRED BY ELECTRICAL CONTRACTOR.
11. 2-#12 & 1-#12 GND, 3/4"C. T0 208V OUTLET

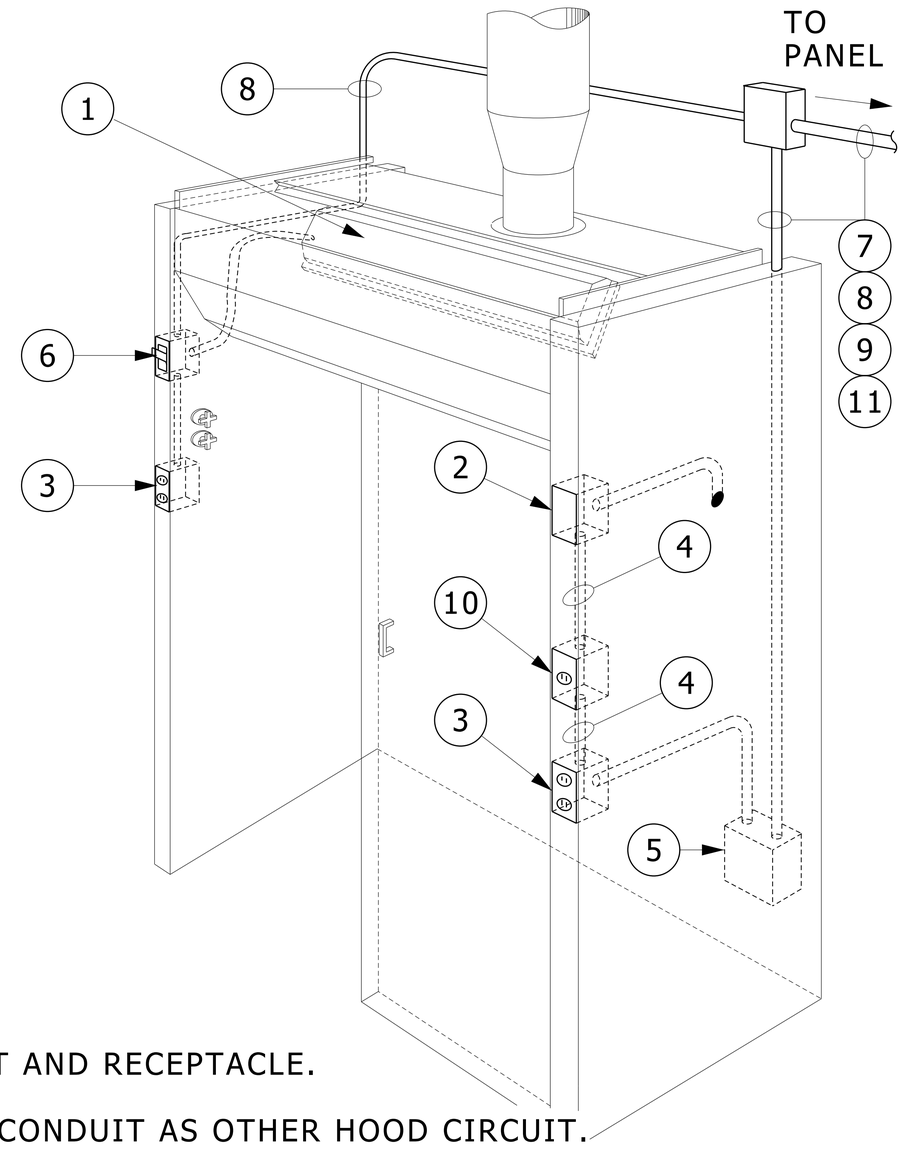

WALK-IN FUME HOOD ELECTRICAL SERVICE

NO SCALE

26053336.dgn

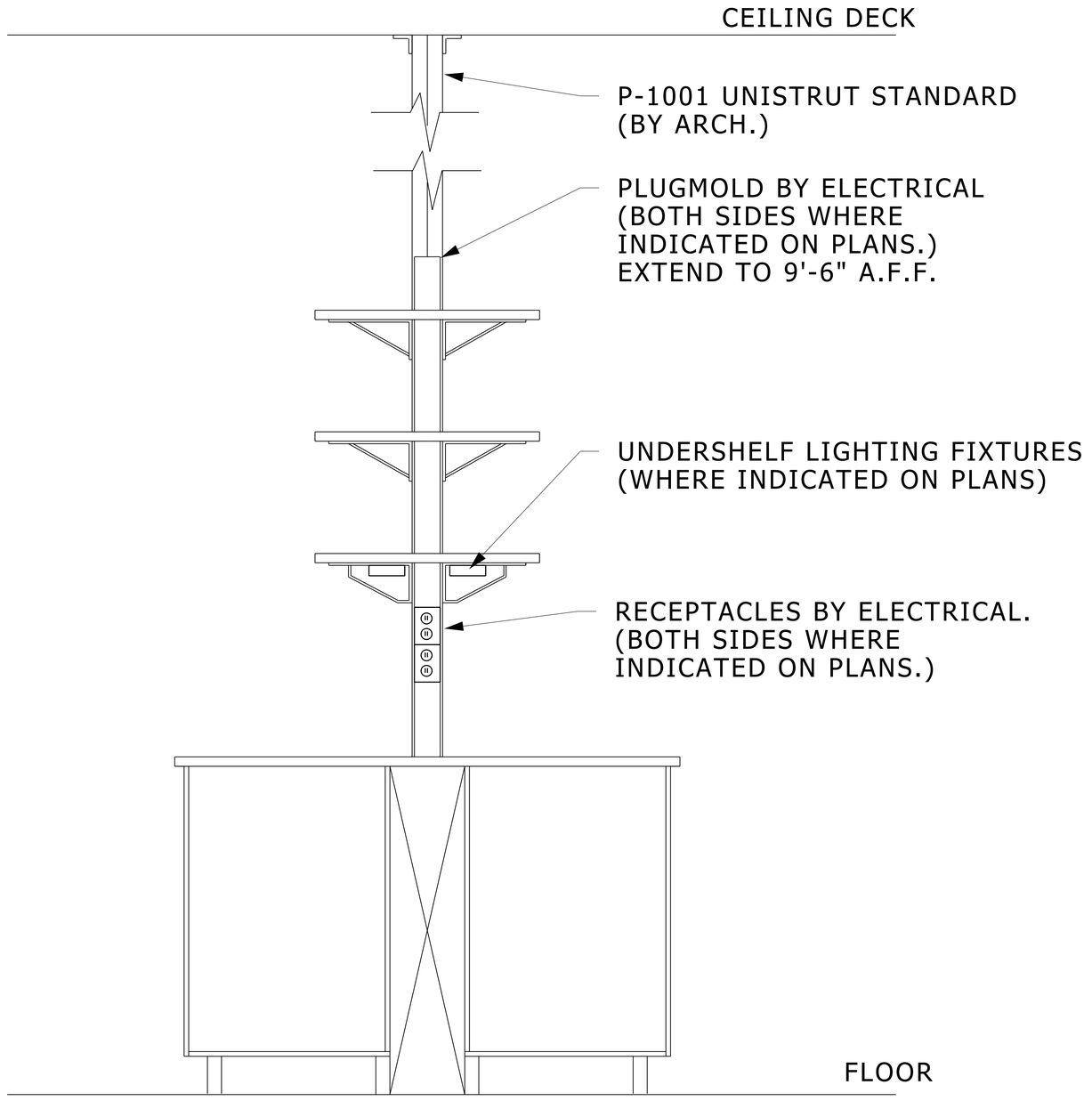

ISLAND BENCH DETAIL

NO SCALE

26053337.dgn

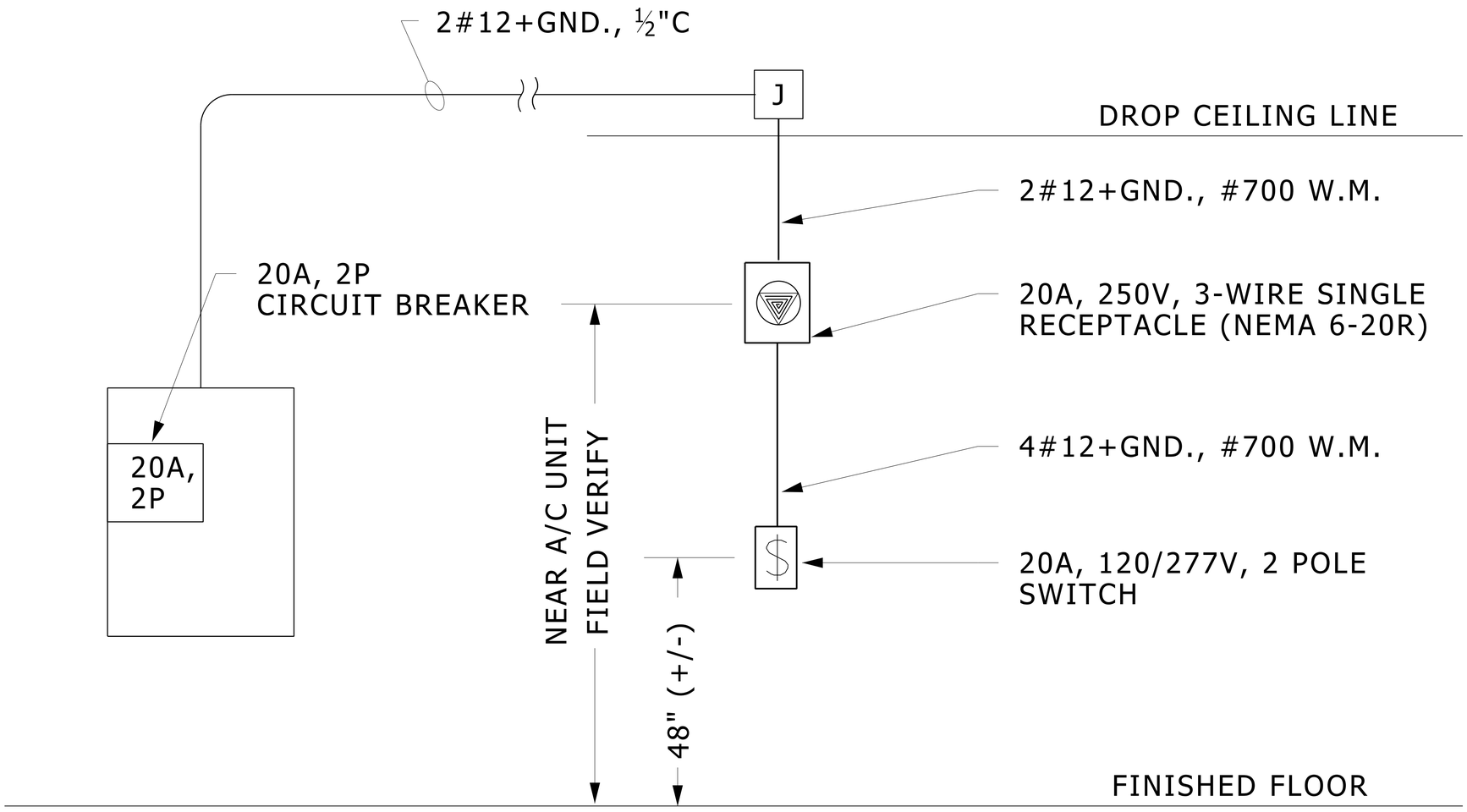

WINDOW A/C UNIT - ELECTRICAL DETAIL

NO SCALE

26053338.dgn

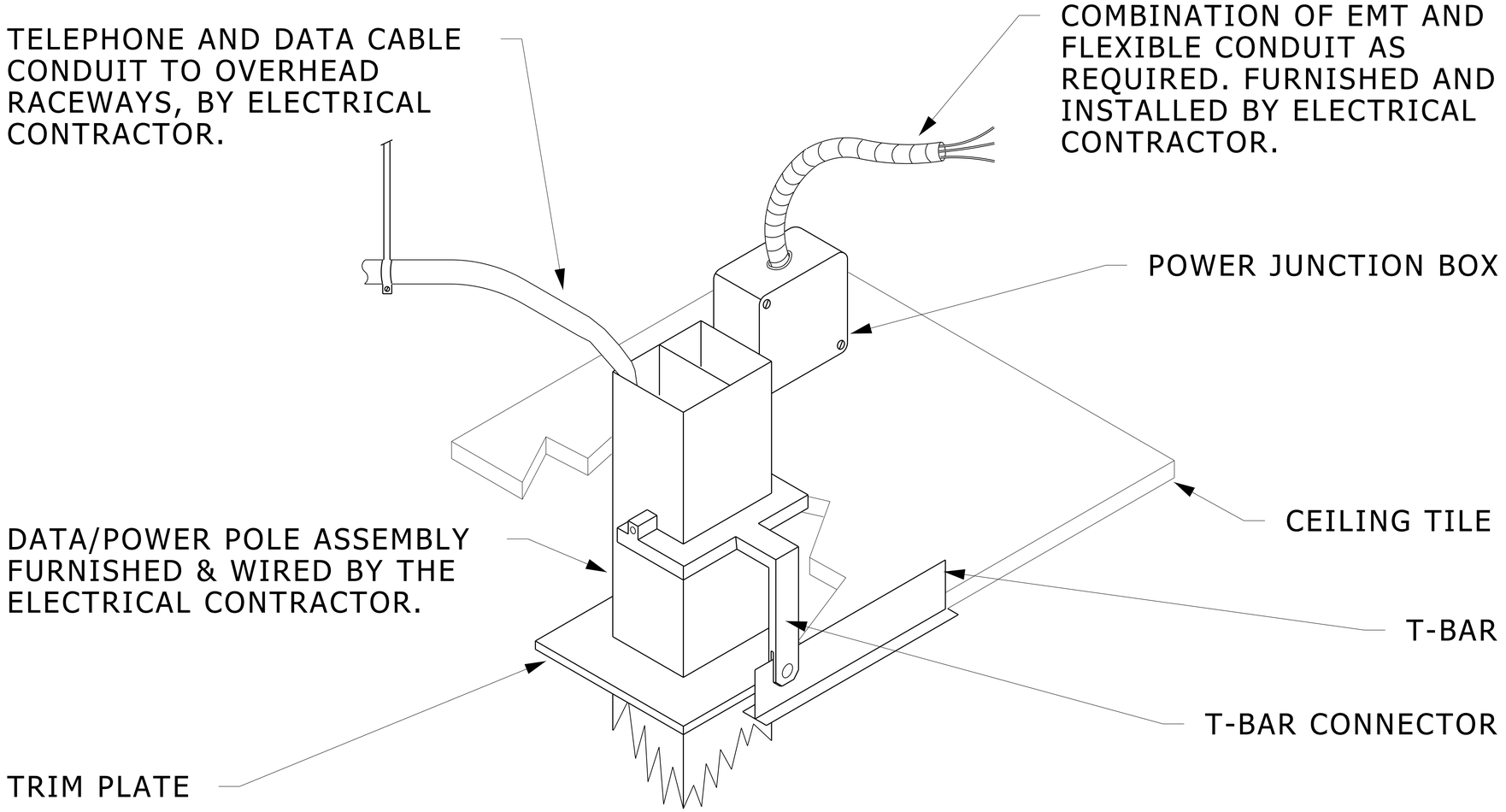

TYPICAL
POWER, TEL. & DATA CABLE CONNECTIONS

NO SCALE

26053339.dgn

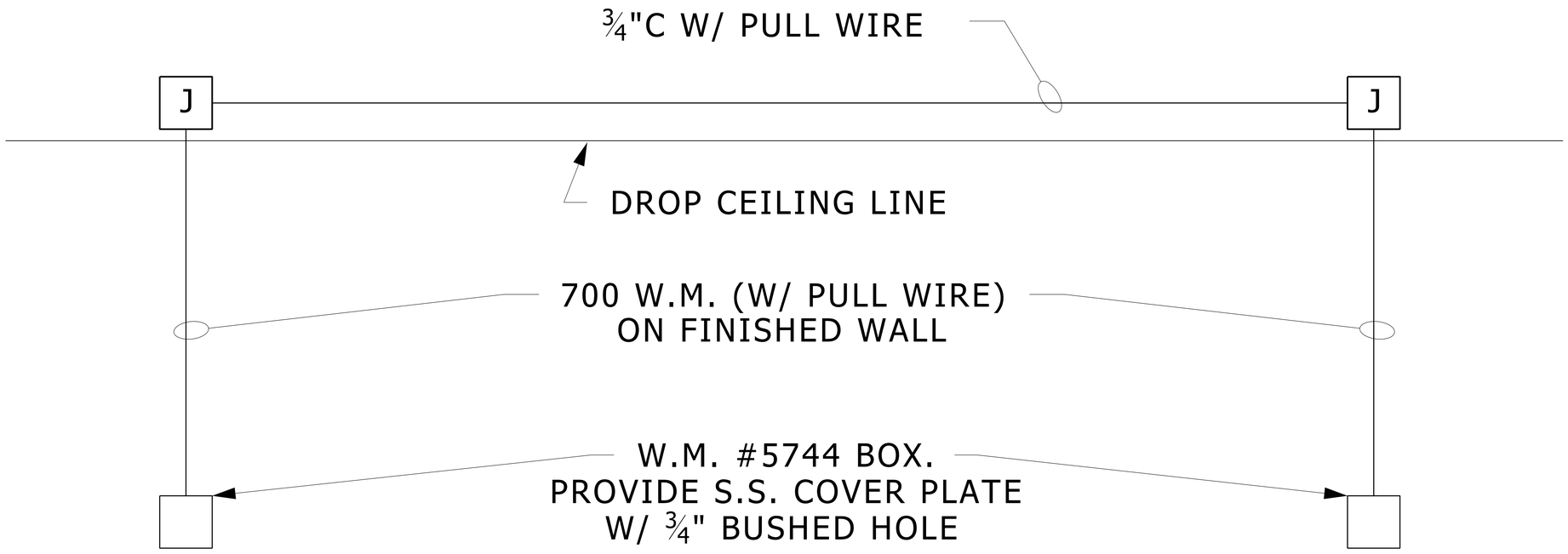

A/V RACEWAY DETAIL

NO SCALE

26053340.dgn

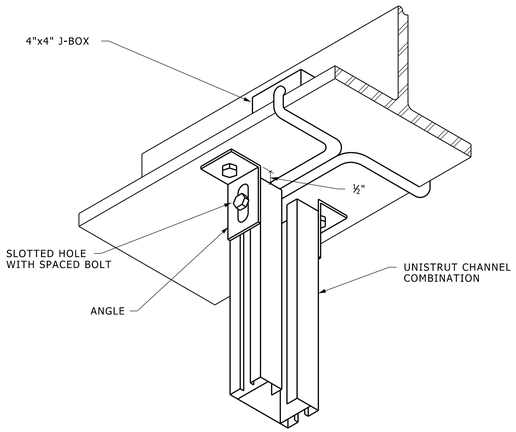

ISOMETRIC CONNECTION AT BEAM

NO SCALE

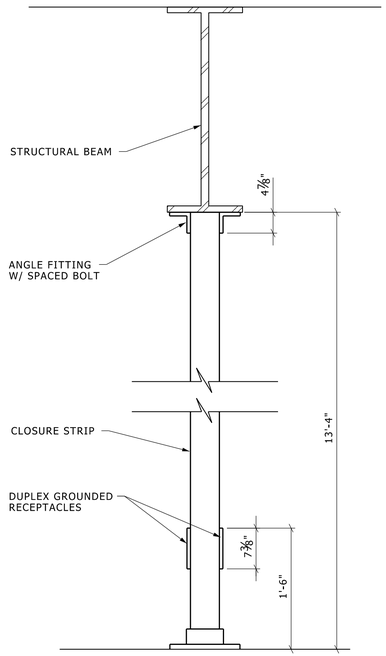

SERVICE POLE ELEVATION

NO SCALE

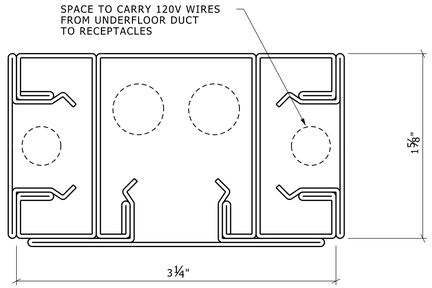

HORIZONTAL SECTION OF SERVICE POLE

NO SCALE

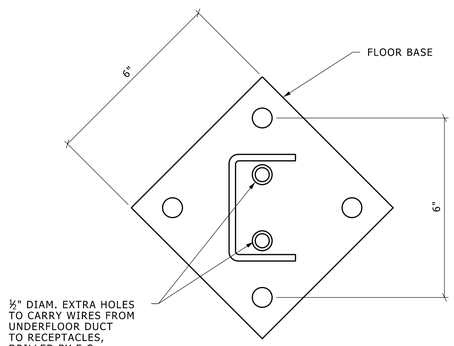

FLOOR BASE PLAN

NO SCALE

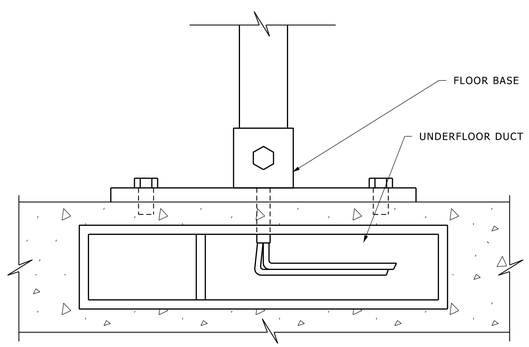

SECTION AT FLOOR LEVEL

NO SCALE

POWER POLE DETAILS

NO SCALE

26053341.dgn

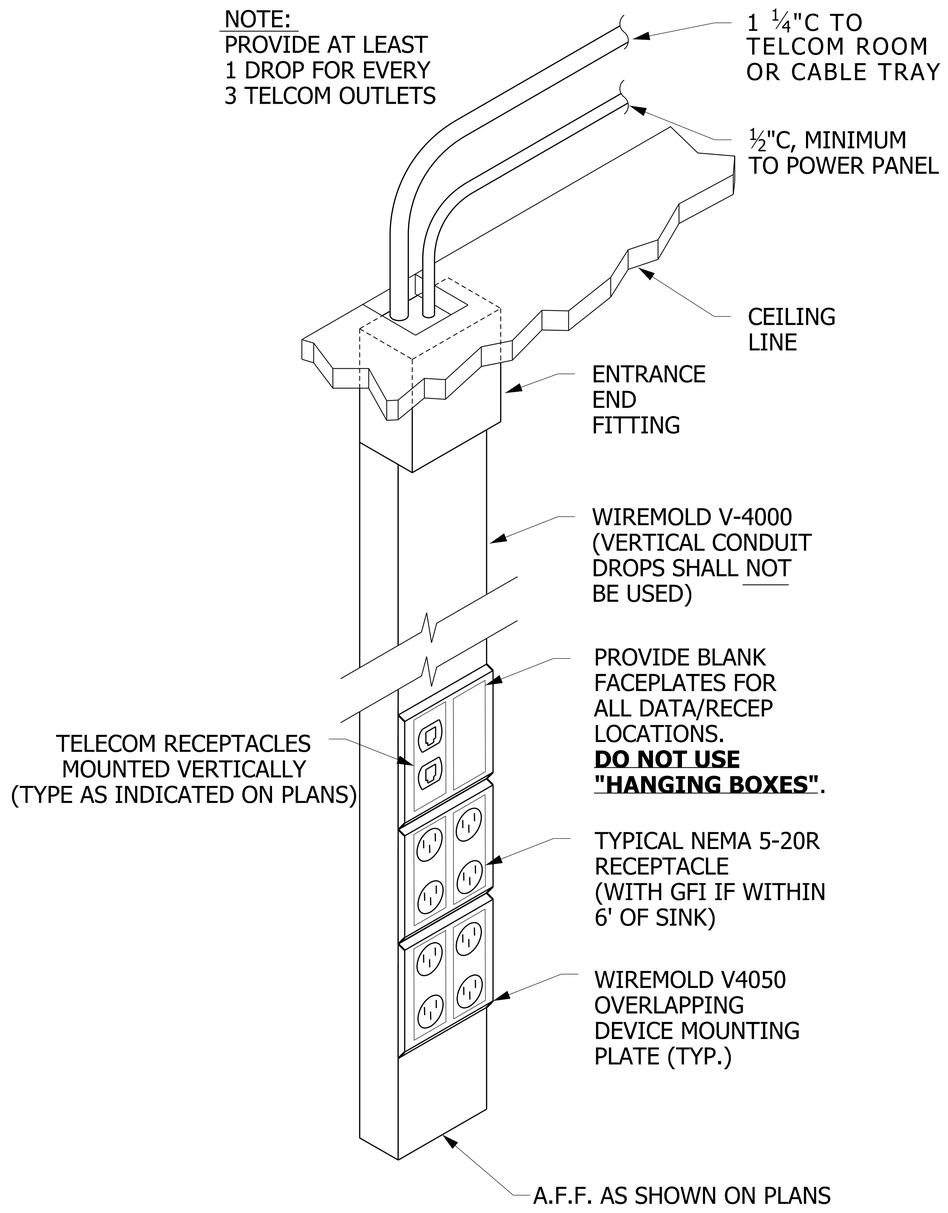

INSTALLATION DETAIL - FOR EXISTING WALLS
TYPICAL DUAL CHANNEL METAL RACEWAY

NO SCALE

26053342.dgn

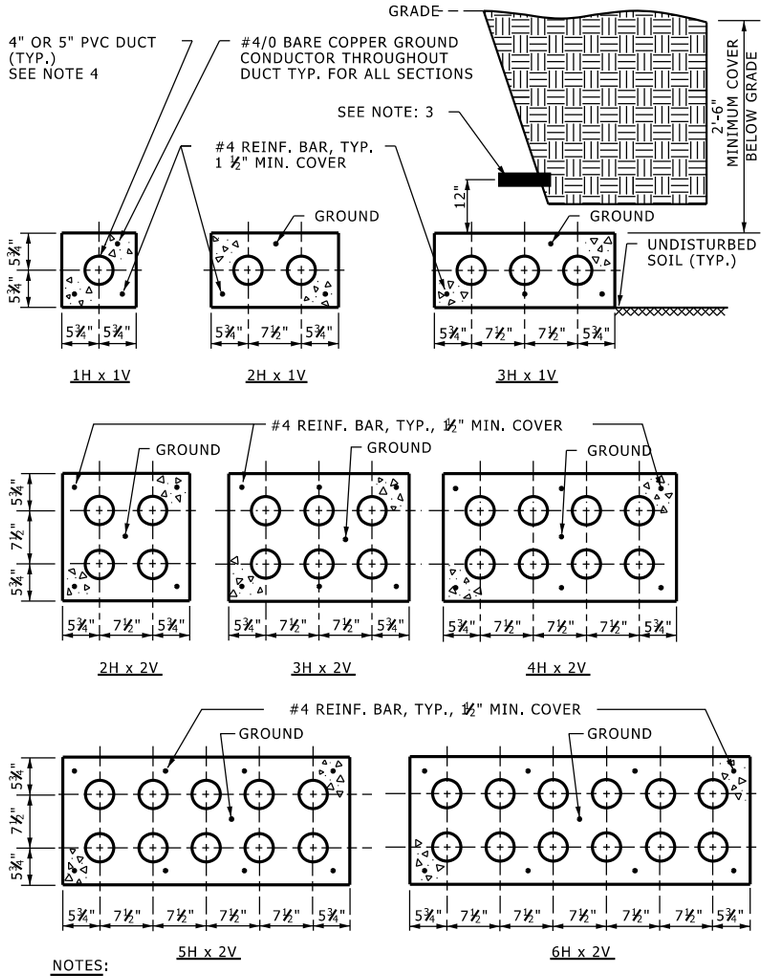

NOTES:

1. H - NUMBER OF DUCTS IN HORIZONTAL PLANE.
   V - NUMBER OF DUCTS IN VERTICAL PLANE.

2. IF 2'-6" MINIMUM COVER CAN NOT BE MAINTAINED, 2" OF ADDITIONAL CONCRETE COVER MUST BE ADDED TO THE DUCT BANK WHEN COVER IS BETWEEN 2'-0" AND 2'-5" AND 4" OF CONCRETE WHEN BETWEEN 1'-6" AND 1'-11", CONSULT UofM HIGH VOLTAGE BEFORE INSTALLING WHERE LESS THAN 1'-5" OF COVER WOULD BE PRESENT.

3. DUCT BANKS SHALL BE MARKED WITH A 6" WIDE RED PLASTIC MARKER STRIP LABELED TO INDICATE "HIGH VOLTAGE" AND PLACED IN THE BACKFILL APPROXIMATELY 12" ABOVE THE ENTIRE LENGTH OF THE DUCT BANK.

4. DUCTS ARE TYPICALLY 4". SEE PROJECT DOCUMENTS FOR ANY SPECIAL REQUIREMENTS.

5. ALL POWER DUCT BANKS HAVE #4/0 BARE COPPER GROUND CABLE, AND #4 REINFORCING BARS.

6. USE DUCT SPACERS TO HOLD DUCTS IN PLACE. NOTED SPACINGS ARE MINIMUMS. USE PRODUCTS FROM CARLON, CANTEX, OR STERLING. (TIE TOGETHER USING NON-FERROUS WIRE).

7. NO DEVIATIONS FROM THIS DESIGN DETAIL CAN BE MADE WITHOUT PRIOR WRITTEN APPROVAL FROM ONE OF THE UTILITIES AND PLANT ENGINEERING ELECTRICAL ENGINEERS.

UNDERGROUND POWER DUCT SECTIONS

NO SCALE

26054301.dgn

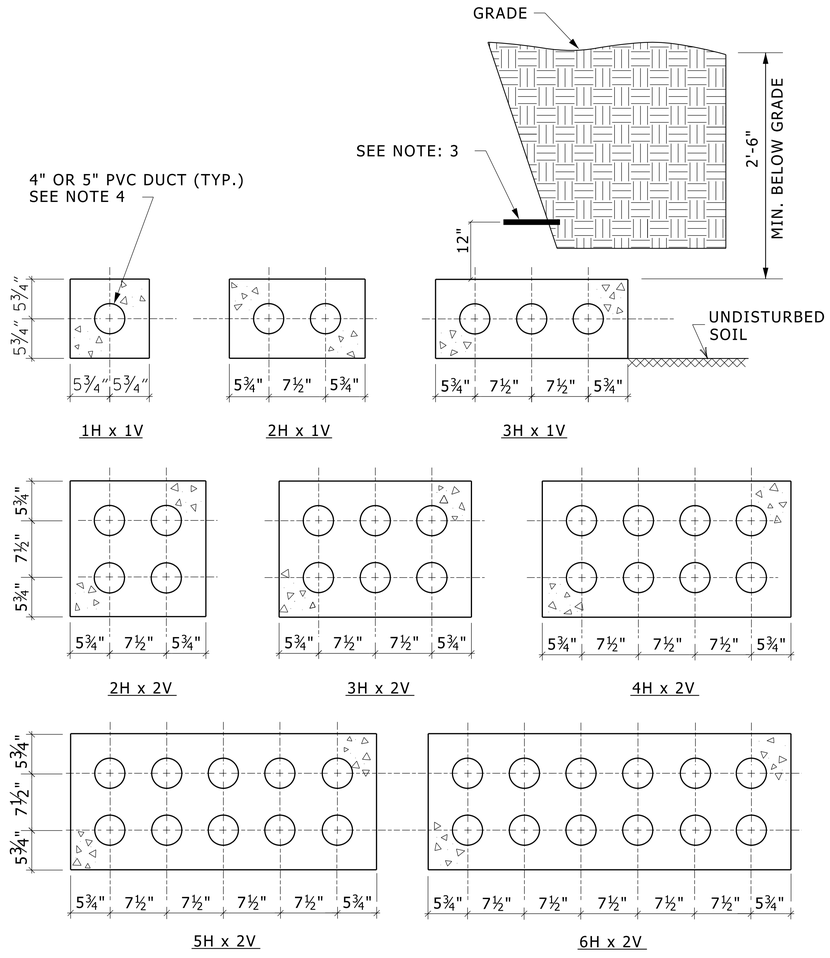

NOTES:

1. H - NUMBER OF DUCTS IN HORIZONTAL PLANE.
   V - NUMBER OF DUCTS IN VERTICAL PLANE.

2. IF 2'-6" MINIMUM COVER CAN NOT BE MAINTAINED, 2" OF ADDITIONAL CONCRETE COVER MUST BE ADDED TO THE DUCT BANK WHEN COVER IS BETWEEN 2'-0" AND 2'-5" AND 4" OF CONCRETE WHEN BETWEEN 1'-6" AND 1'-11", CONSULT UofM IT BEFORE INSTALLING WHERE LESS THAN 1'-5" OF COVER WOULD BE PRESENT.

3. DUCT BANKS SHALL BE MARKED WITH A 6" WIDE RED PLASTIC MARKER STRIP LABELED TO INDICATE "TELE-COMMUNICATION" AND PLACED IN THE BACKFILL APPROXIMATELY 12" ABOVE THE ENTIRE LENGTH OF THE DUCT BANK.

4. TELECOMMUNICATION DUCTS DO NOT INCLUDE GROUNDING CONDUCTORS.

5. USE DUCT SPACERS TO HOLD DUCTS IN POSITION. NOTED SPACINGS ARE MINIMUMS. USE PRODUCTS FROM CARLON, CANTEX, OR STERLING. (TIE TOGETHER USING NON-FERROUS WIRE)

6. DUCTS ARE TYPICALLY 4". SEE PROJECT DOCUMENTS FOR ANY SPECIAL REQUIREMENTS.

7. PROVIDE RIGID GALVANIZED STEEL CONDUITS OF THE SAME SIZE AS THE DUCTS FROM THE BUILDING WALL PENETRATION TO THE ITCom BE ROOM. PROVIDE A PULL BOX SIZED PER THE N.E.C. FOR EVERY 180° OF BEND.

UNDERGROUND TELECOMMUNICATION DUCT SECTIONS

NO SCALE

26054302.dgn

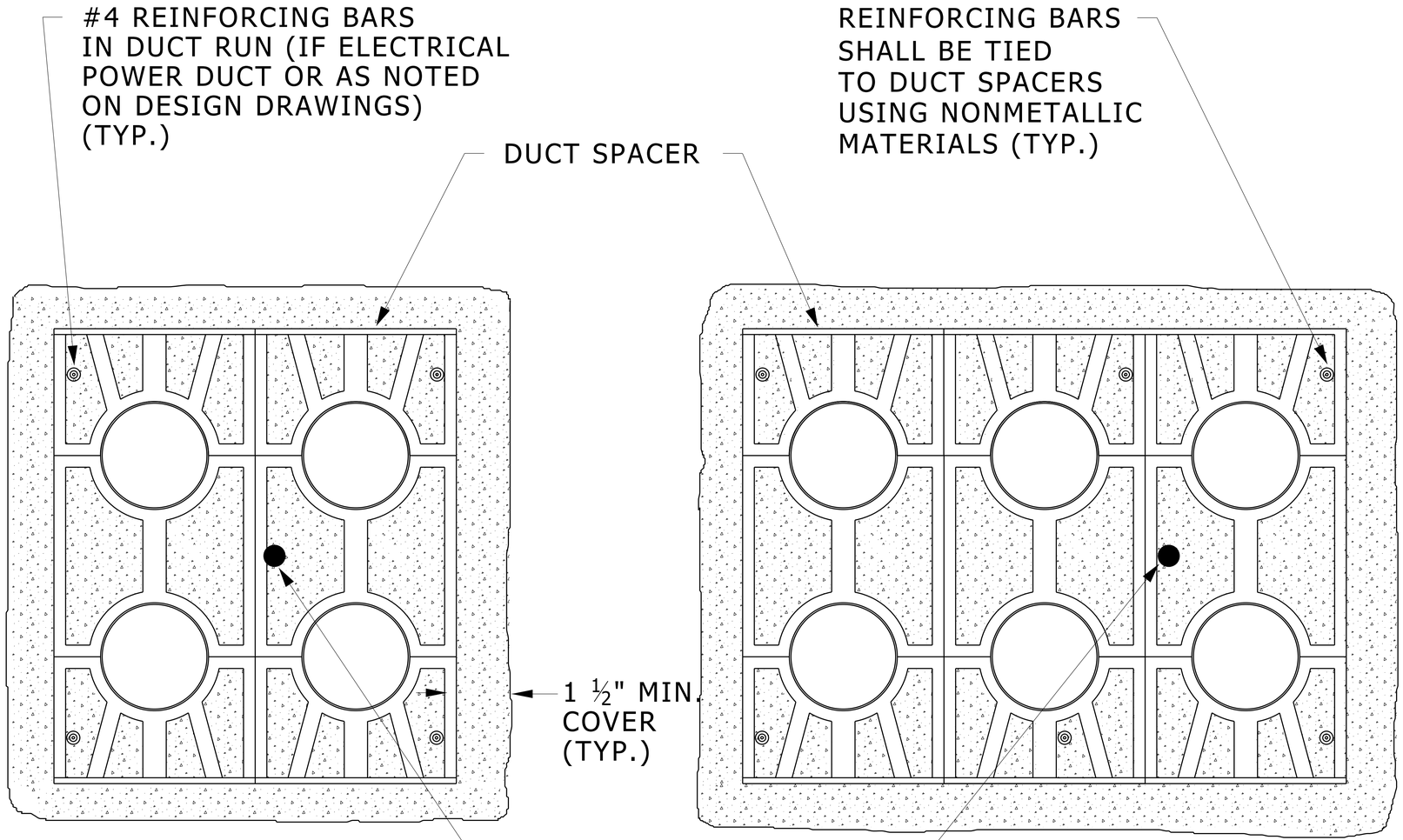

TYPICAL DUCT BANK SPACER & REINFORCING DETAILS

NO SCALE

26054303.dgn

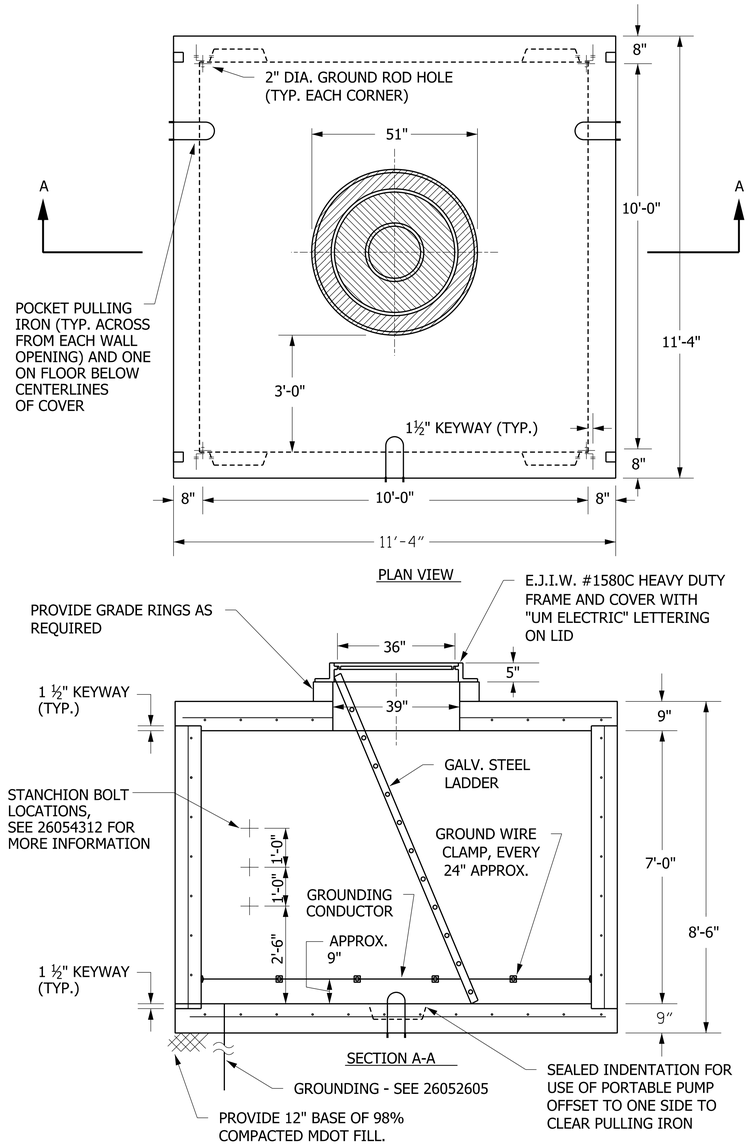

GENERAL NOTES:

1. INSTALL ONE PULLING IRON IN EACH WALL OPPOSITE EACH PRESENT & FUTURE DUCT RUN OUT OF MANHOLE, ALSO ON FLOOR CENTERED UNDER COVER.
2. SEE DUCT PLAN DRAWING SHOWING PLANNED & FUTURE DUCT ENTRANCES. ON CURRENTLY PLANNED DUCTS, PROVIDE OPENING SIZED & CONSTRUCTED AS NOTED IN DETAIL 26054311.

CONCRETE: 5000 P.S.I. @ 28 DAYS

REINF: H-20 HIGHWAY LOADING
GRADE 60 REBAR
SPREAD BARS @ ALL OPENINGS

WALLS: #5 BAR @ 12" O.C. EACH WAY

ROOF AND FLOOR:
#5 BAR @ 12" O.C. LONGITUDINAL
#7 BAR @ 12" O.C. TRANSVERSE

(4) EXTRA #5 DIAGONAL BARS @ ROOF OPENING

PROVIDE GALVANIZED STEEL LADDER. (CONFIRM LENGTH)

10' x 10' x 7' PRE-CAST POWER MANHOLE

NO SCALE

26054304.dgn

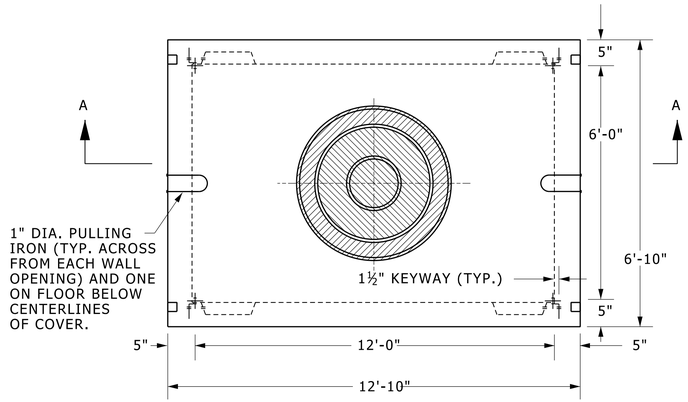

PLAN VIEW

CONCRETE: 4500 P.S.I. @ 28 DAYS

REINF: H-20 HIGHWAY LOADING
GRADE 60 REBAR
SPREAD BARS @ ALL OPENINGS

WALLS: #5 BAR @ 12" O.C. EACH WAY

ROOF AND FLOOR:
#5 BAR @ 12" O.C. LONGITUDINAL
#7 BAR @ 12" O.C. TRANSVERSE

(4) EXTRA #5 DIAGONAL BARS @ ROOF OPENING

PROVIDE HARDWARE PACKAGE

"S" BRACKETS	24
"B" BRACKETS	16
47 HOLE RACKS	14
½" x 13 x 1¼" BOLTS	40
½" x 13 NUTS	40
½" x 13 x 1¾" BOLTS	72
8' HOOKED LADDER (CONFIRM LENGTH)	1
STEP	1

1" DIA. BUTYL RUBBER ROPE MASTICS PROVIDED TO INSURE WATERTIGHT SEALS.

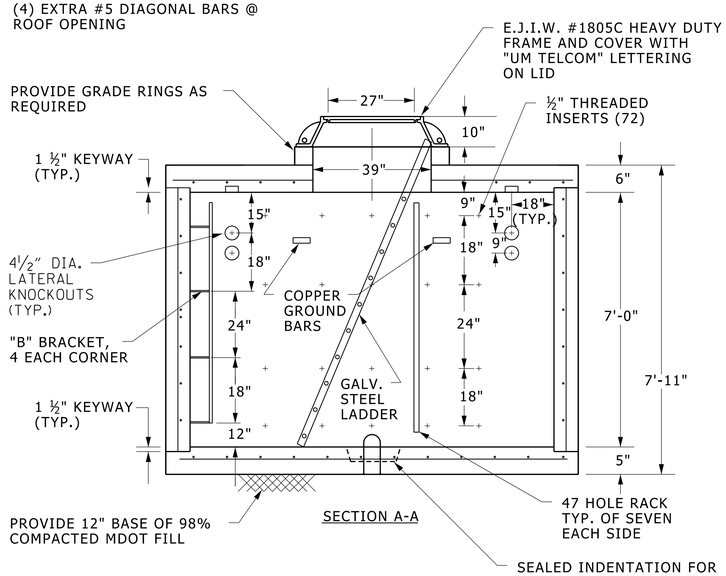

GENERAL NOTES

1. INSTALL ONE PULLING IRON IN EACH WALL OPPOSITE EACH PRESENT AND FUTURE DUCT RUN OUT OF MANHOLE. ALSO ON FLOOR CENTERED UNDER COVER.
2. SEE DUCT PLAN DRAWING SHOWING PLANNED & FUTURE DUCT ENTRANCES. ON CURRENTLY PLANNED DUCTS, PROVIDE OPENING SIZED & CONSTRUCTED AS NOTED IN DETAIL. 16110015. ON FUTURE DUCT RUNS, PROVIDE KNOCKOUTS SIZED AS NOTED FOR MAXIMUM OF 8 DUCTS
3. DUCT BANKS SHALL ONLY ENTER MANHOLE ON SHORT (5'-0") SIDES OF MANHOLE.
4. PROVIDE CABLE ARMS & INSERTS SPACED AS SHOWN ON ALL 4 SIDES OF MANHOLE. INSERTS TO END WITHIN 1" OF FLOOR AND CEILING.

12' x 6' x 7'-0" TELECOMMUNICATIONS MANHOLE

NO SCALE

26054305.dgn

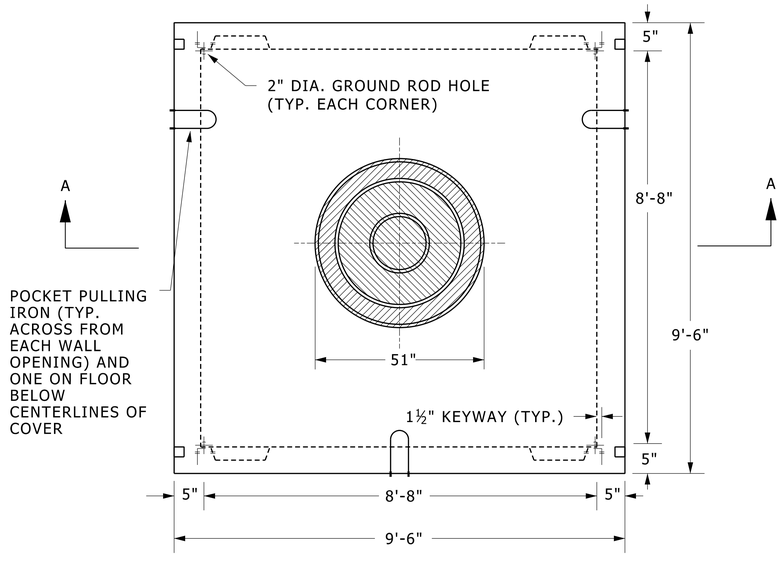

PLAN VIEW

CONCRETE: 4500 P.S.I. @ 28 DAYS

REINF: H-20 HIGHWAY LOADING
GRADE 60 REBAR
SPREAD BARS @ ALL OPENINGS

WALLS: #5 BAR @ 12" O.C. EACH WAY

ROOF AND FLOOR:
#5 BAR @ 12" O.C. LONGITUDINAL
#7 BAR @ 12" O.C. TRANSVERSE

(4) EXTRA #5 DIAGONAL BARS @ ROOF OPENING

PROVIDE GALVANIZED STEEL LADDER. (CONFIRM LENGTH)

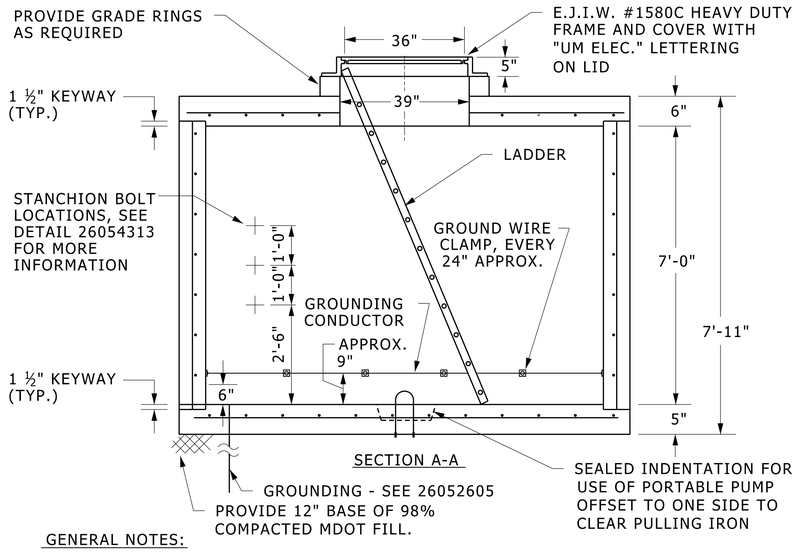

GENERAL NOTES:

1. INSTALL ONE PULLING IN EACH WALL OPPOSITE EACH PRESENT & FUTURE DUCT RUN OUT OF MANHOLE, ALSO ON FLOOR CENTERED UNDER COVER.
2. SEE DUCT PLAN DRAWING SHOWING PLANNED & FUTURE DUCT ENTRANCES. ON CURRENTLY PLANNED DUCTS, PROVIDE OPENING SIZED & CONSTRUCTUED AS NOTED IN DETAIL 26054311.

8'-8" x 8'-8" x 7'-0" PRE-CAST POWER MANHOLE

NO SCALE

26054306.dgn

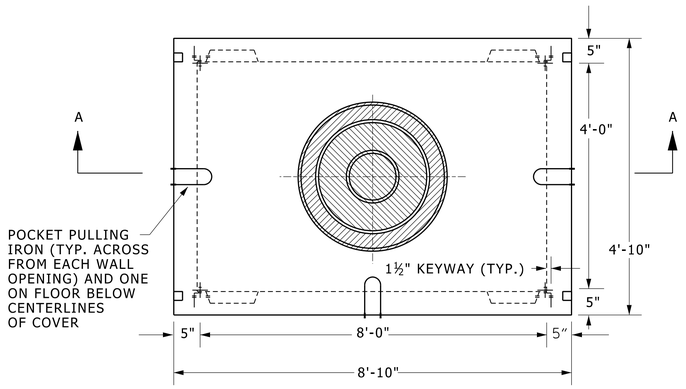

PLAN VIEW

CONCRETE: 4500 P.S.I. @ 28 DAYS

REINF: H-20 HIGHWAY LOADING
GRADE 60 REBAR
SPREAD BARS @ ALL OPENINGS

WALLS: #5 BAR @ 12" O.C. EACH WAY

ROOF AND FLOOR:
#5 BAR @ 12" O.C. LONGITUDINAL
#7 BAR @ 12" O.C. TRANSVERSE

(4) EXTRA #5 DIAGONAL BARS @ ROOF OPENING

PROVIDE HARDWARE PACKAGE

"S" BRACKETS	12
"B" BRACKETS	12
47 HOLE RACKS	10
½" x 13 x 1¼" BOLTS	24
½" x 13 NUTS	24
½" x 13 x 1¾" BOLTS	42
7'-9" HOOKED LADDER (CONFIRM LENGTH)	1
STEP	1

1" DIA. BUTYL RUBBER ROPE MASTICS PROVIDED TO INSURE WATERTIGHT SEALS.

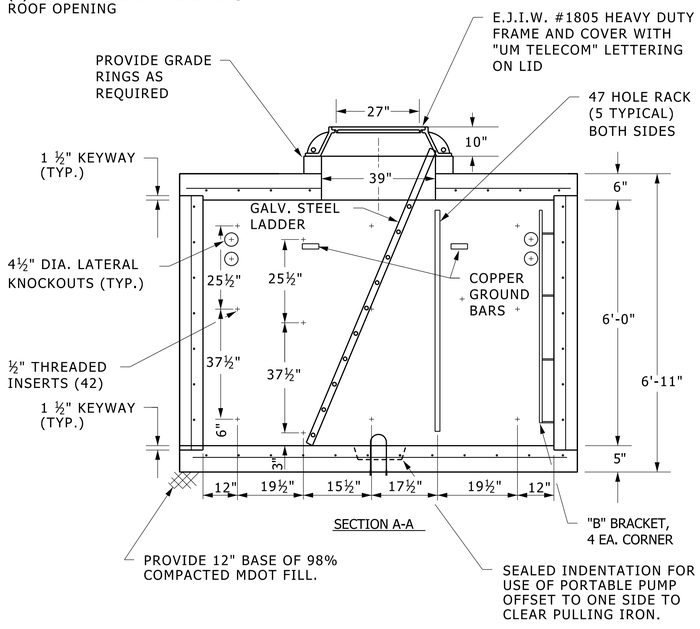

GENERAL NOTES:

1. INSTALL ONE PULLING IRON IN EACH WALL OPPOSITE EACH PRESENT & FUTURE DUCT RUN OUT OF MANHOLE, ALSO ON FLOOR CENTERED UNDER COVER

2. SEE DUCT PLAN DRAWING SHOWING PLANNED & FUTURE DUCT ENTRANCES. ON CURRENTLY PLANNED DUCTS, PROVIDE OPENING SIZED & CONSTRUCTED AS NOTED IN DETAIL 16110015. ON FUTURE DUCT RUNS, PROVIDE KNOCKOUTS SIZED AS NOTED FOR MAXIMUM OF 8 DUCTS.

3. DUCT BANKS SHALL ONLY ENTER MANHOLE ON SHORT (4'-0") SIDES OF MANHOLE.

8' x 4' x 6' PRE-CAST TELECOMMUNICATIONS MANHOLE

NO SCALE

26054307.dgn

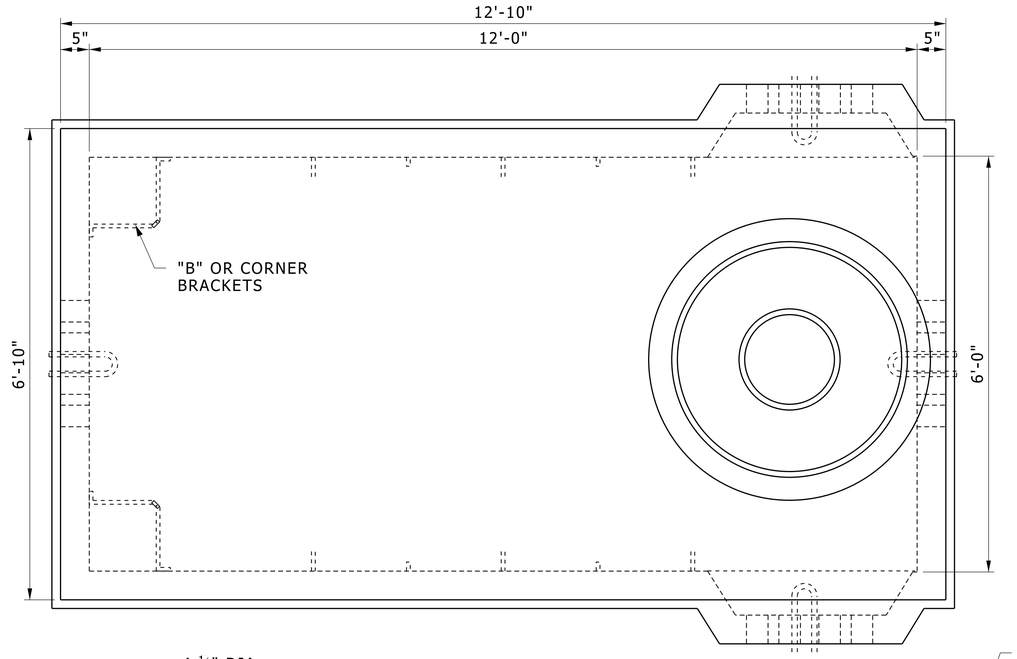

HARDWARE PACKAGE

"S" BRACKETS	24
"B" BRACKETS	8
47 HOLE RACKS	14
½" X 13 X 1ƒ" BOLTS ¾" BOLTS	64
12" X 13 X 1," BOLTS ¾" BOLTS	32
8' LADDER	1
MANHOLE STEPS	1

H-20 HIGHWAY - BRIDGE LOADING
4500 P.S.I. CONCRETE @ 28 DAYS
WATER TIGHT SEALANT IS PROVIDED.

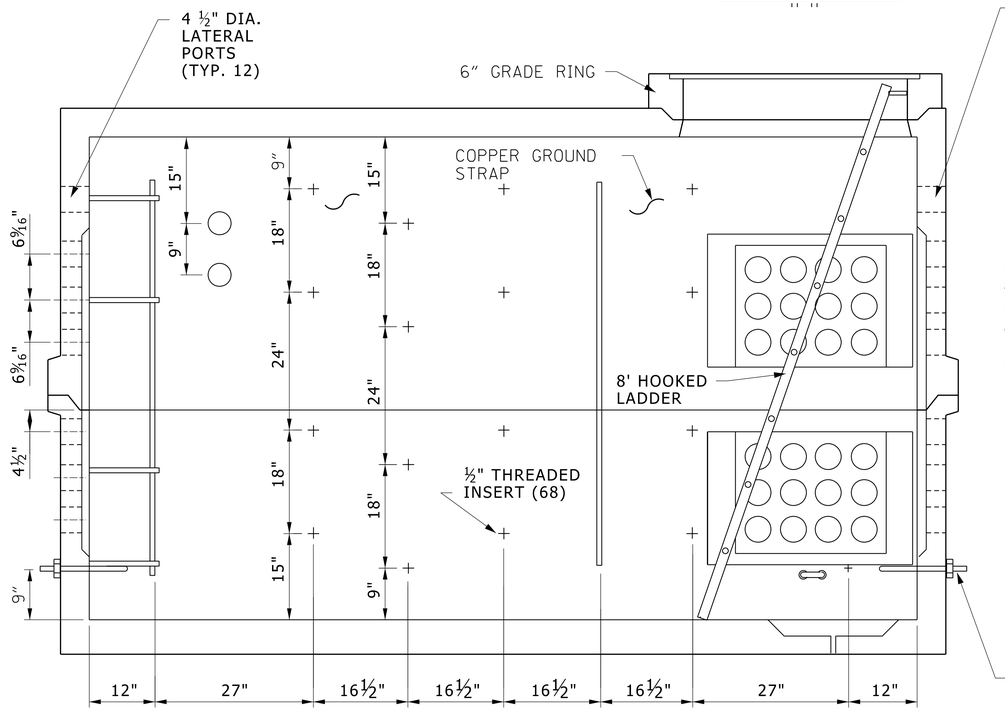

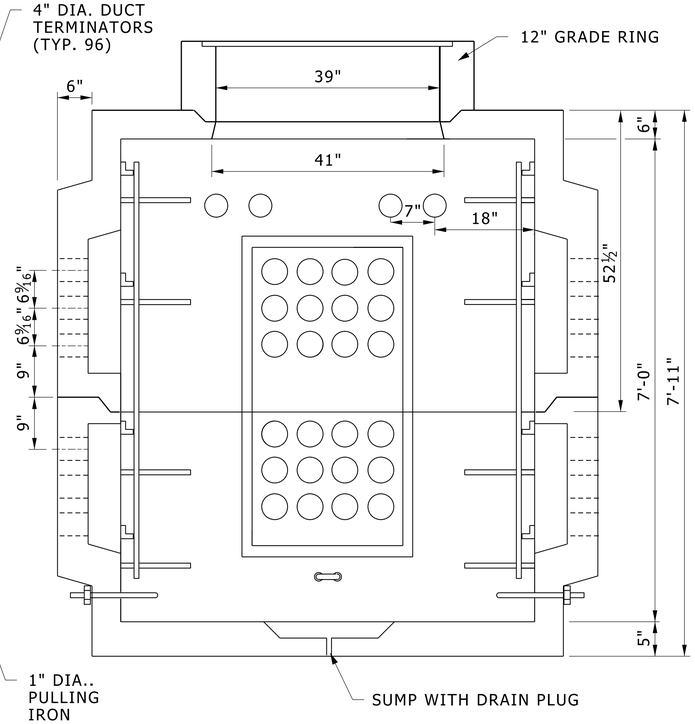

12' x 6' x 7' DETROIT EDISON MANHOLE

NO SCALE

26054308.dgn

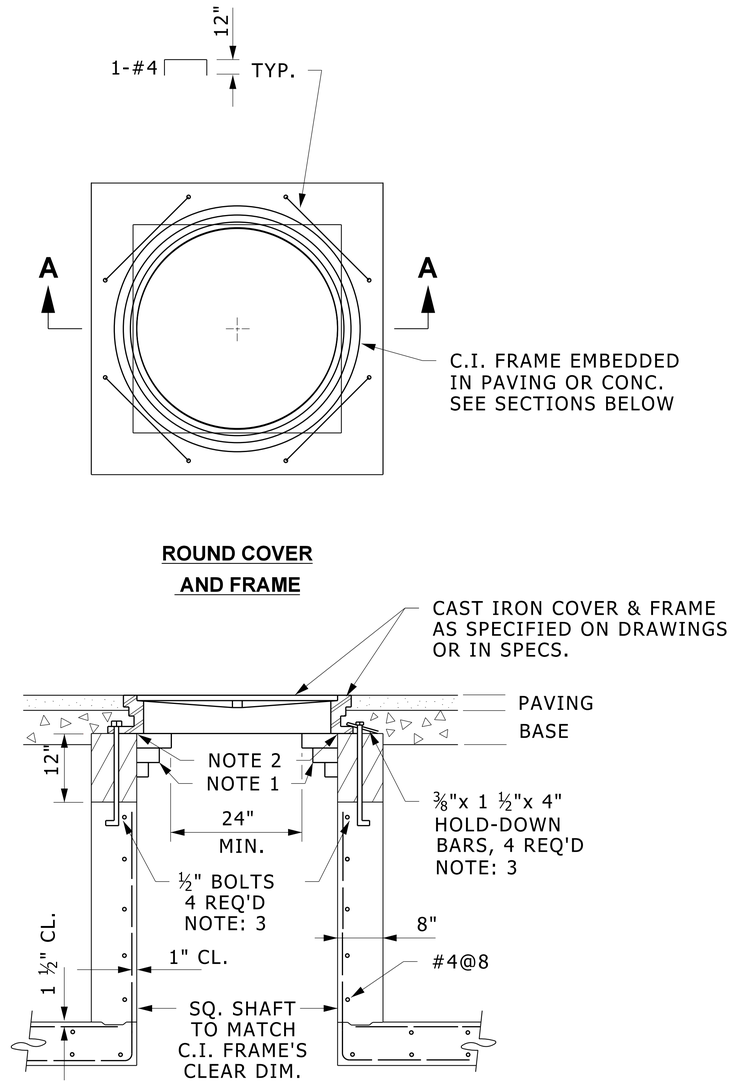

ROUND COVER
AND FRAME

SECTION A-A
IN STREET

NOTES:

1. CORBLE, THREE COURSES, AT CORNERS WHEN USING ROUND COVER IN STREET.
2. WATERPROOF SEAL REQUIRED.
3. EITHER DIRECT BOLTING OR BOLTING WITH HOLD-DOWN BARS ARE ACCEPTABLE ALTERNATES.

NECK AND COVER DETAILS FOR CAST-IN PLACE MANHOLES

NO SCALE

26054309.dgn

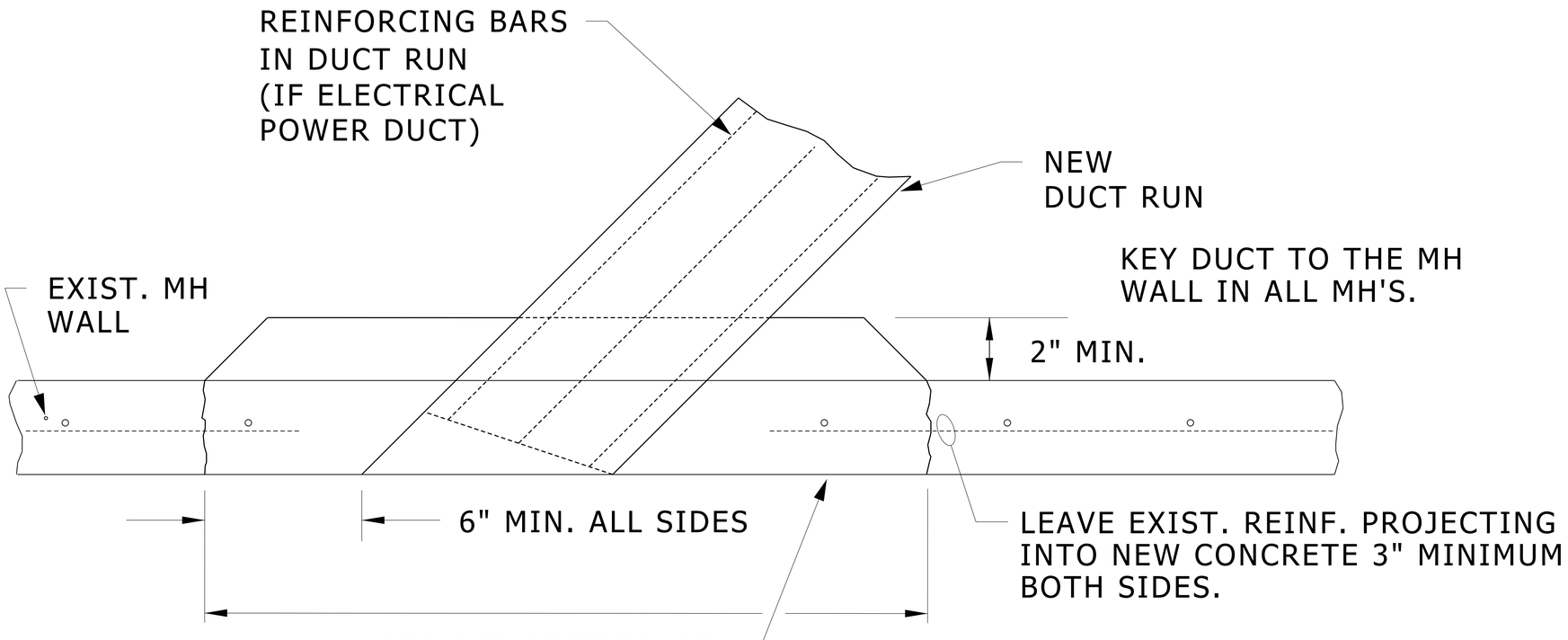

NOTE: ENTRANCE INTO NEW MANHOLE TO BE SIMILAR. LEAVE OPENING IN NEW WALL WITH REINFORCING PROJECTING, TO RECEIVE NEW DUCT CONSTRUCTION.

ANGLE ENTRANCE DETAILS AT MANHOLES

NO SCALE

26054310.dgn

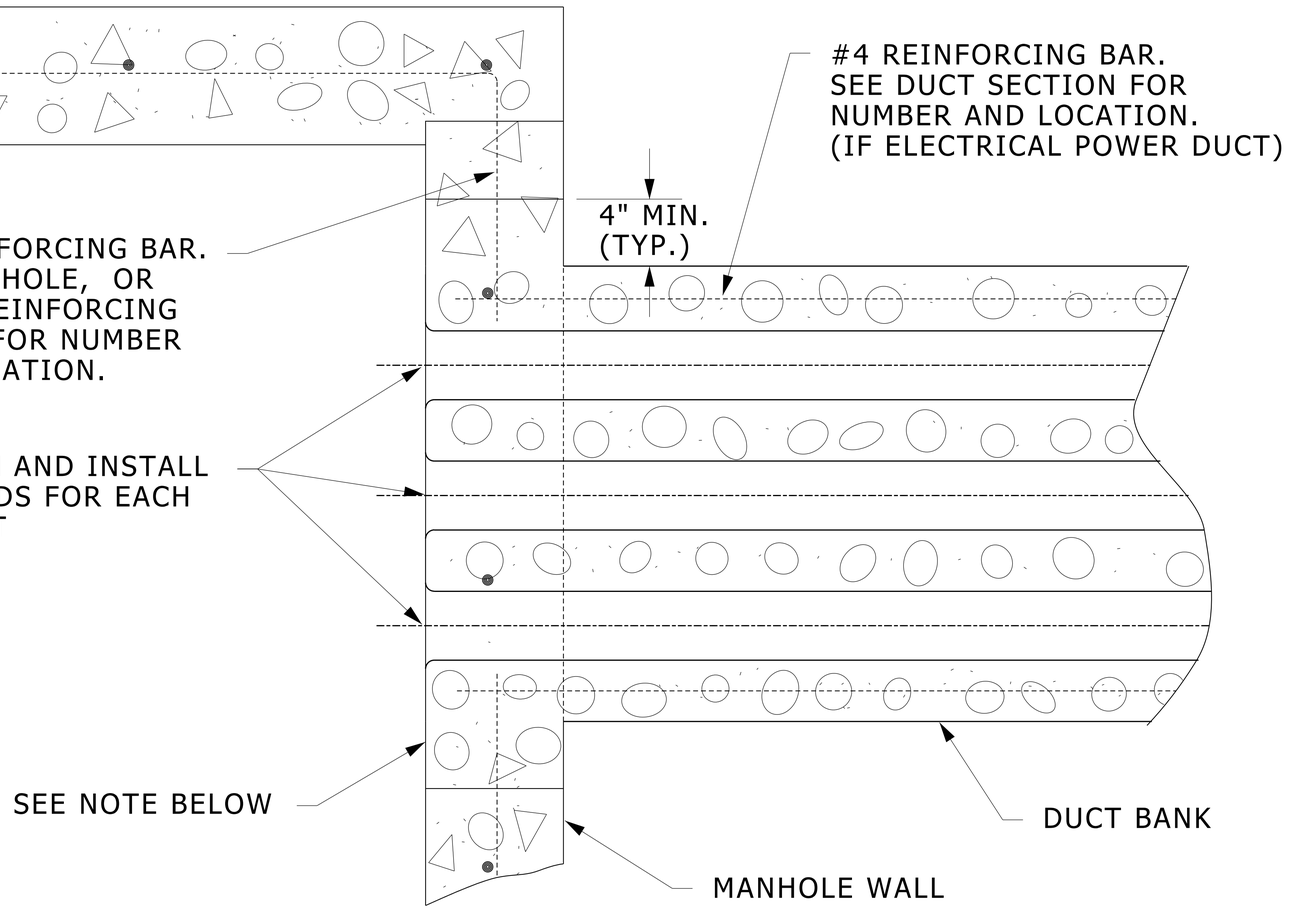

PLAN VIEW

NOTE:

DUCTS ENTERING MANHOLES/VAULTS SHALL BE CONSTRUCTED AS INTEGRAL PARTS OF THE WALL: LEAVE AN OVERSIZED (ABOUT 4" ALL AROUND) OPENING INTO WALL TO RECEIVE DUCT. PROJECT WALL REINFORCING INTO/THROUGH THE DUCTS CROSS SECTION WITHOUT TOUCHING THE CONDUIT'S SURFACES.

SEE ALSO "POWER MANHOLE BELL END INSTALLATION" DETAIL.

DUCT REINFORCING AT MANHOLES, VAULTS, BUILDINGS

NO SCALE

26054311.dgn

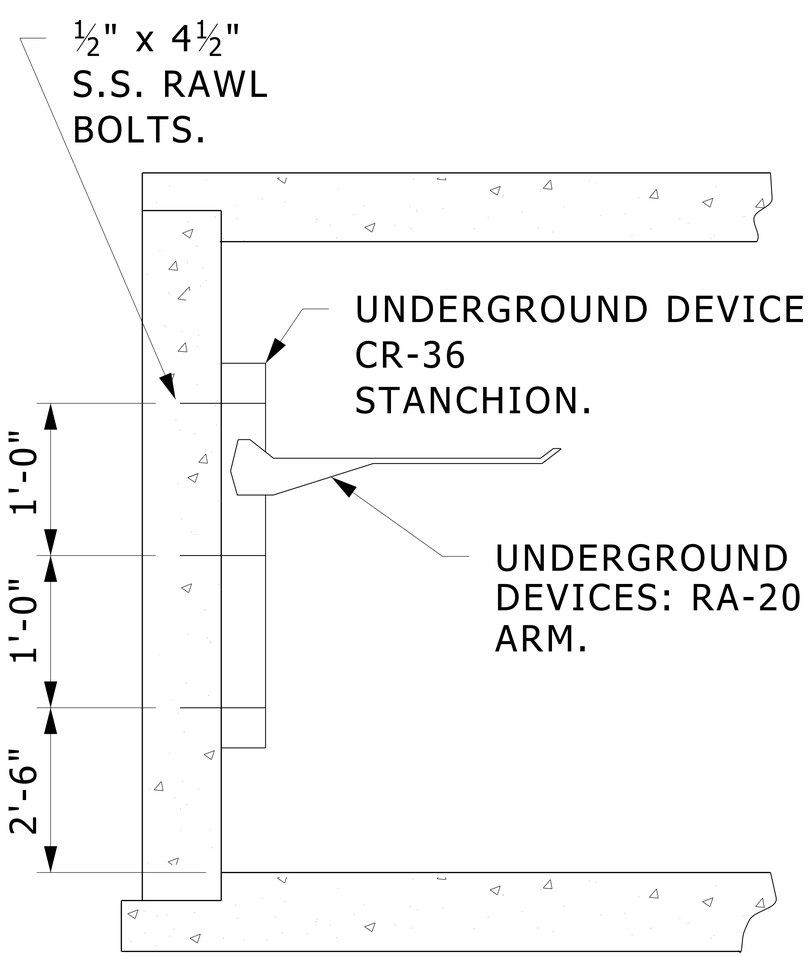

SECTION A-A

STANDARD SIZE (10' X 10')

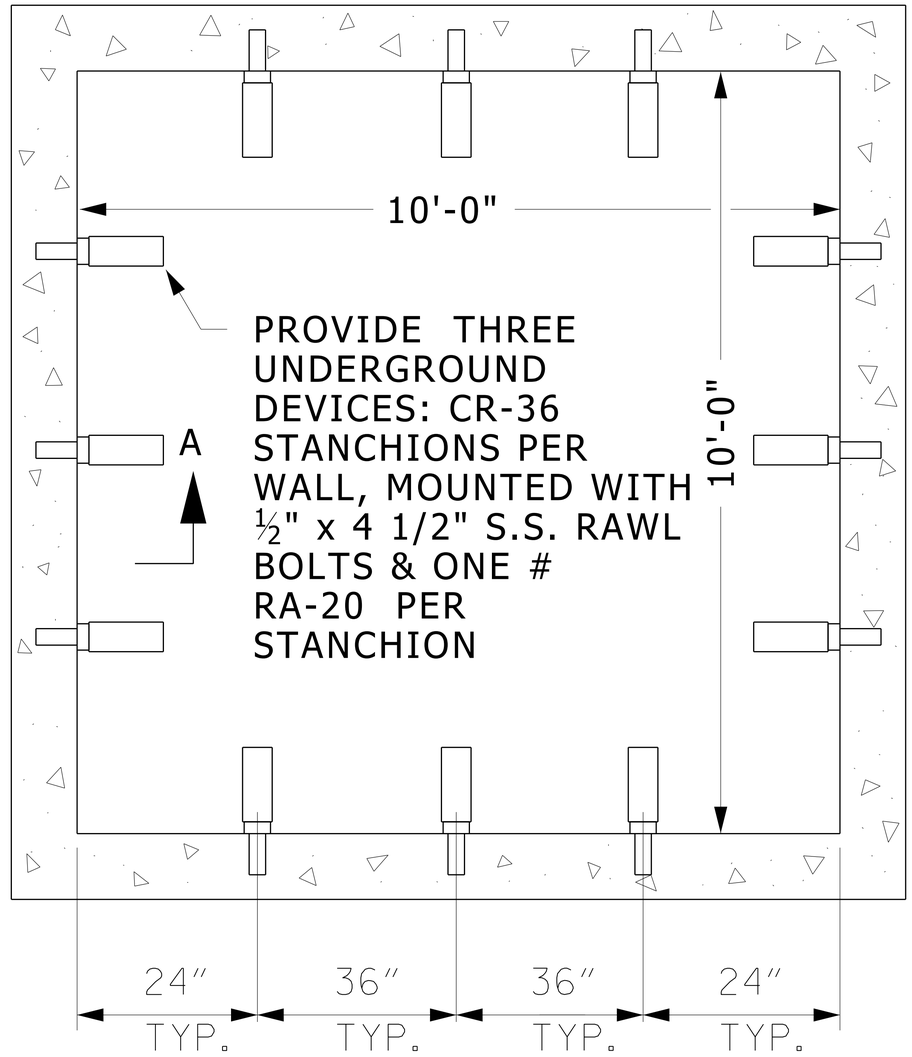

PLAN VIEW

CABLE SUPPORT DETAIL WITHIN POWER MANHOLES

NO SCALE

26054312.dgn

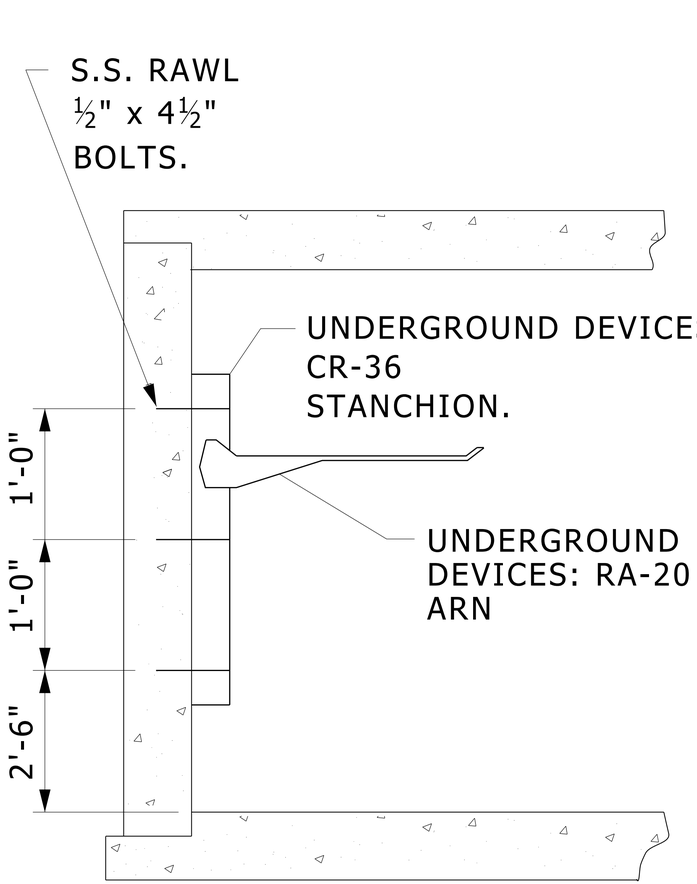

SECTION A-A

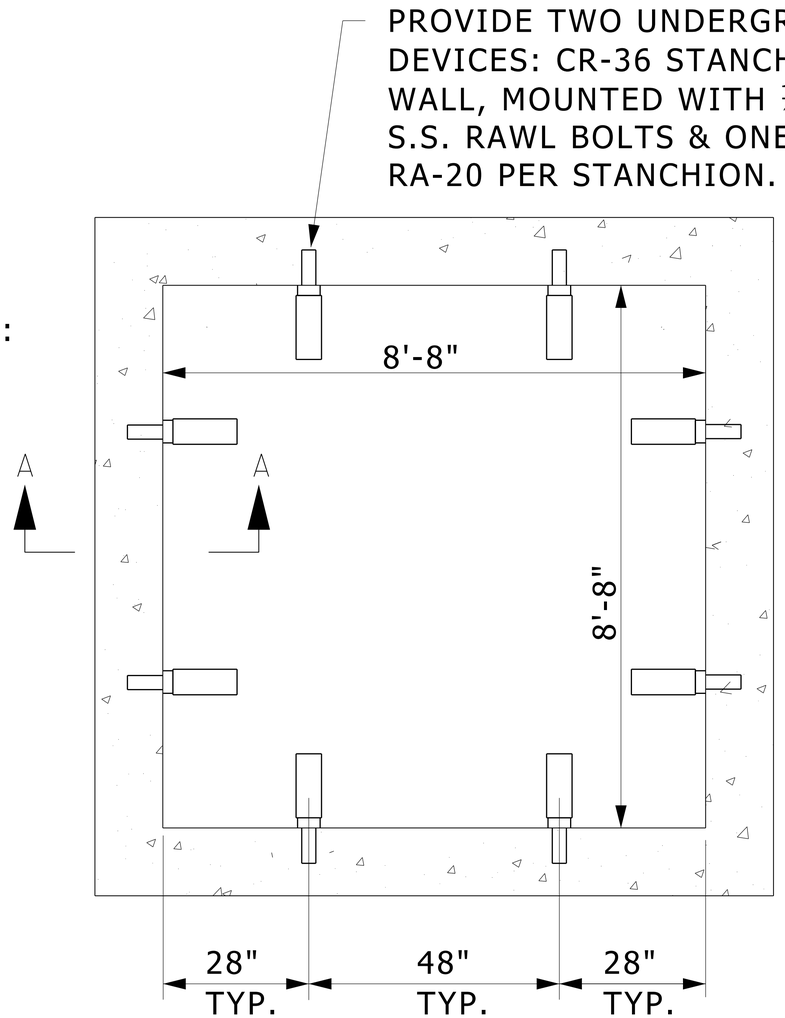

ALTERNATE SIZE (8'-8" X 8'-8")

CABLE SUPPORT DETAIL WITHIN POWER MANHOLES

NO SCALE

26054313.dgn

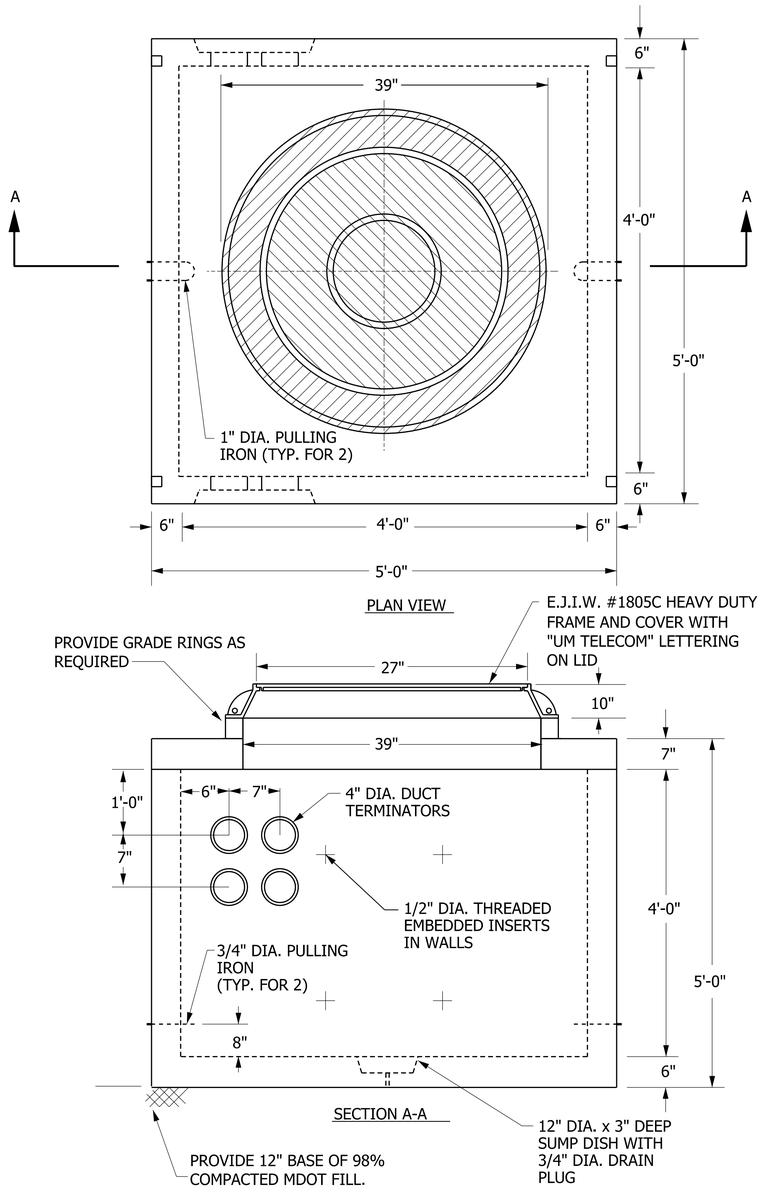

CONCRETE: 5000 P.S.I. @ 28 DAYS

REINF: HS-20 HIGHWAY LOADING
GRADE 60 REBAR
SPREAD BARS @ ALL OPENINGS

GENERAL NOTES:

1. SEE DUCT PLAN DRAWING SHOWING PLANNED AND FUTURE DUCT ENTRANCES, ON CURRENTLY PLANNED DUCTS , PROVIDE TERMINATORS AT LOCATIONS SHOWN, TERMINATOR LOCATIONS SHOWN IN DETAIL ARE EXAMPLES. FOR FUTURE DUCT RUNS PROVIDE KNOCKOUTS SIZED AND LOCATED AS NOTED.

4' x 4' x 4' PRE-CAST ITCOMM HANDHOLE

NO SCALE

26054314.dgn

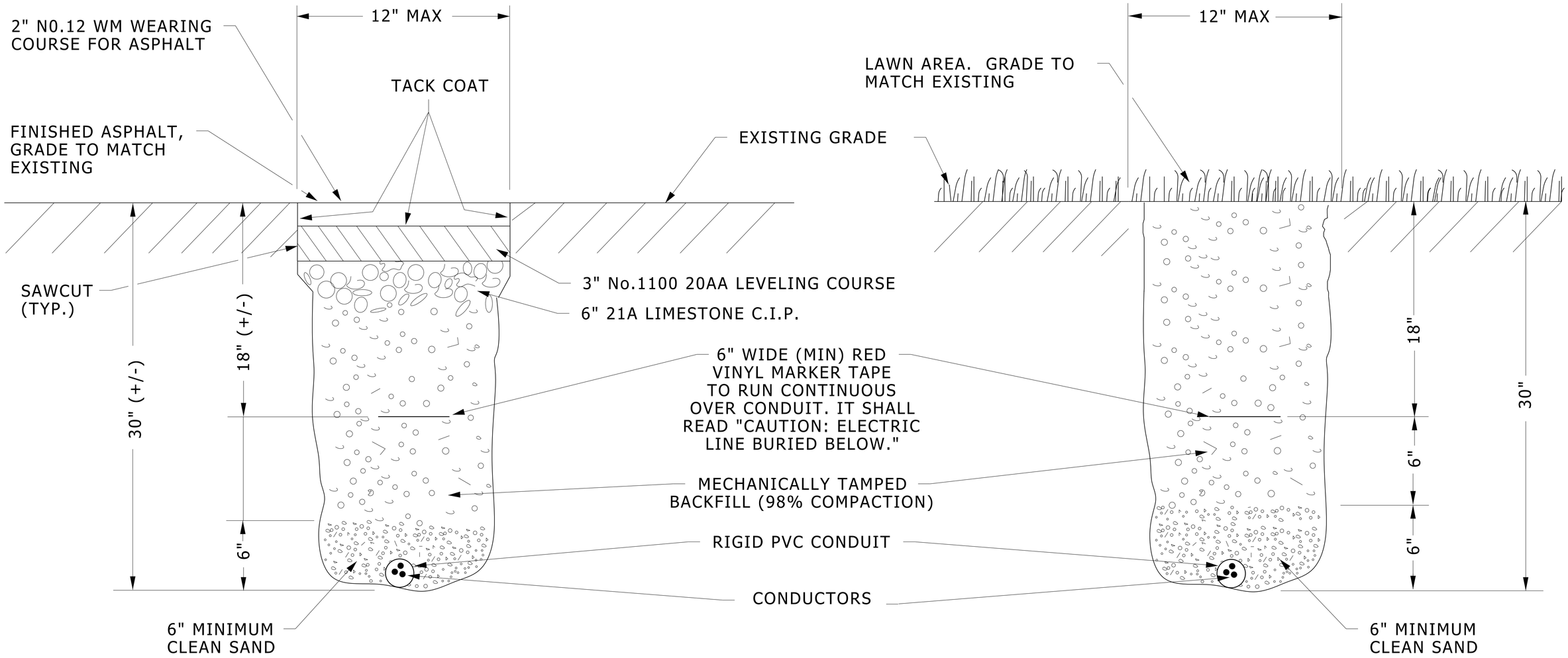

TYPICAL TRENCH DETAIL

NO SCALE

26054316.dgn

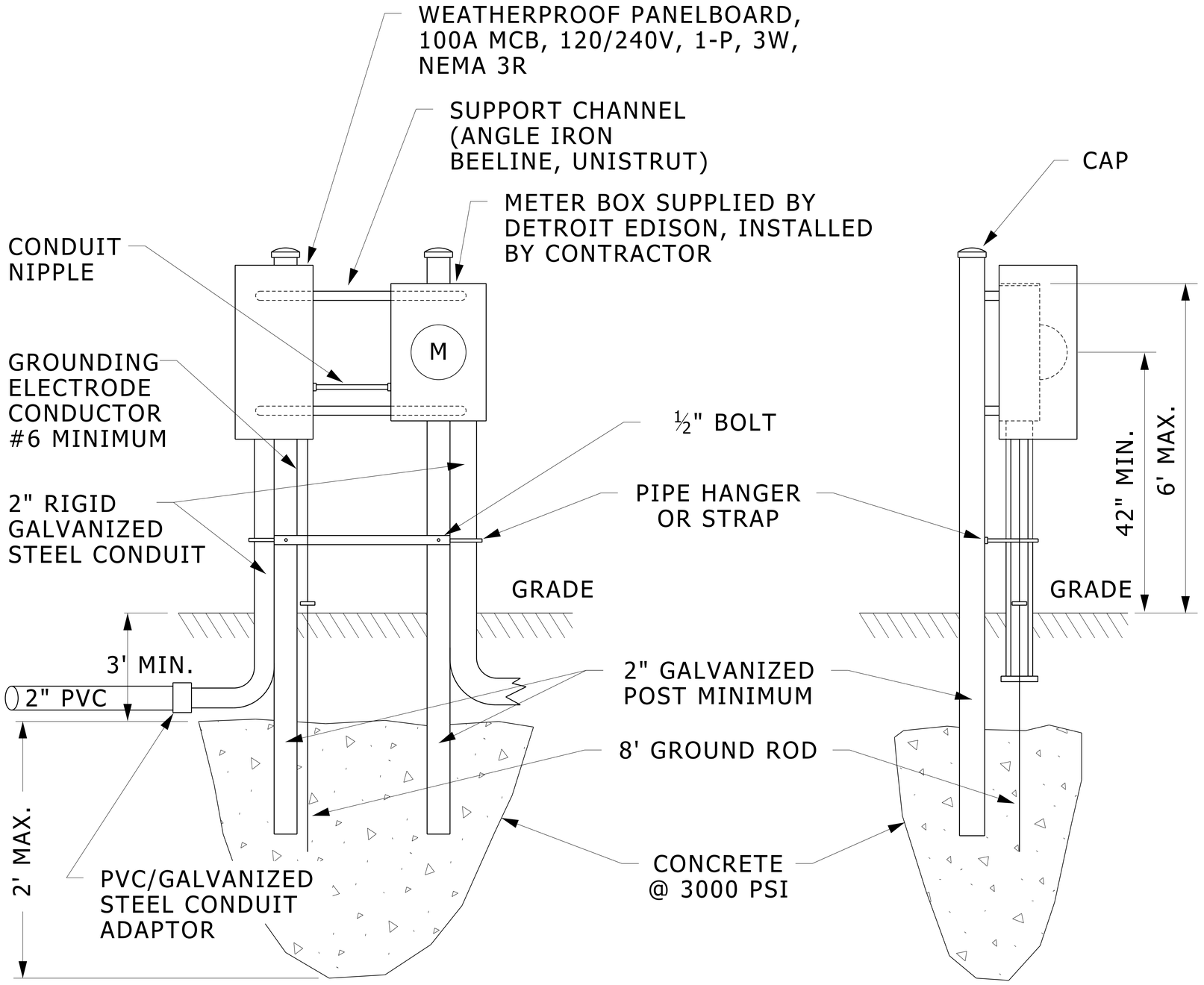

POST MOUNTED UNDERGROUND SERVICE

NO SCALE

26054317.dgn

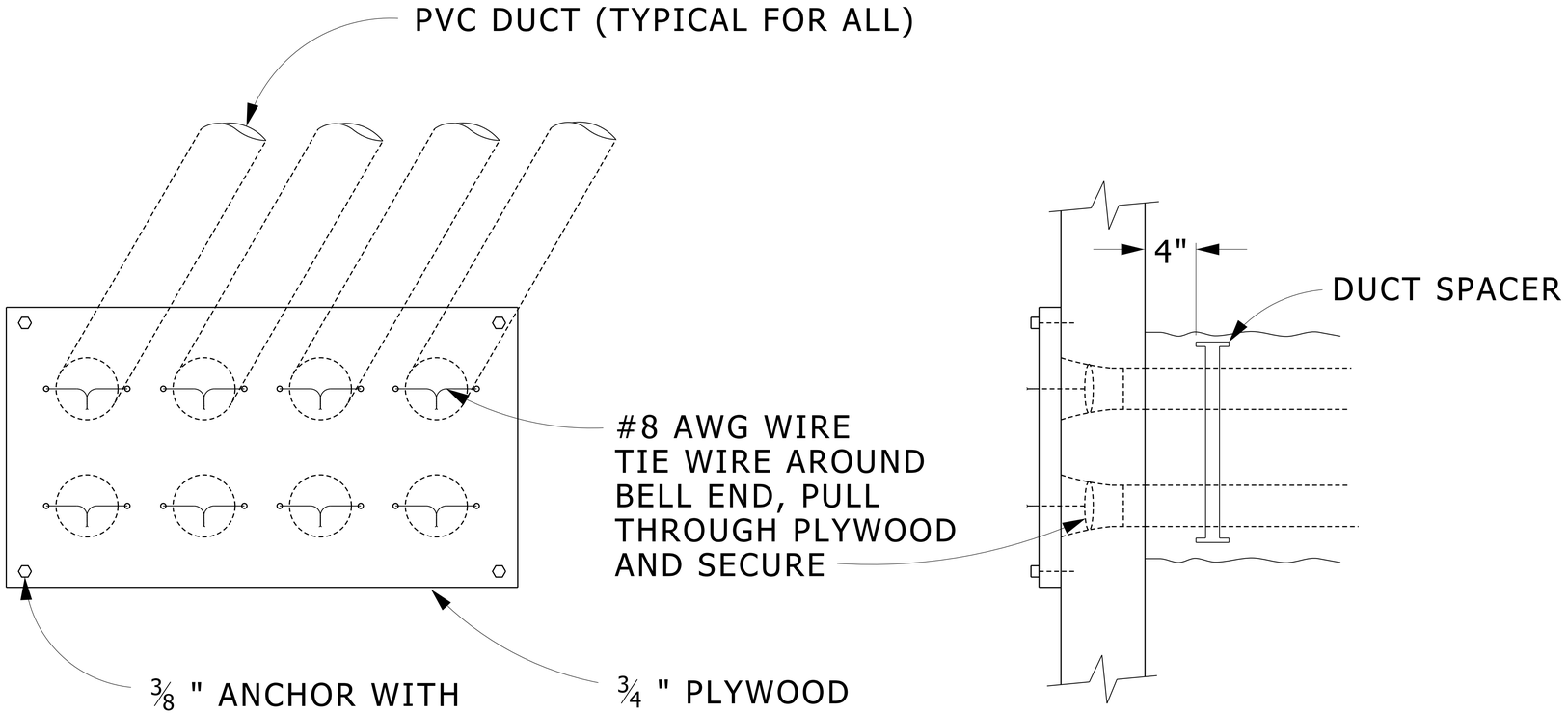

1. DUCT RUNS SHALL EXIT AND ENTER MANHOLES IN SAME SYMMETRICAL CONFIGURATION. DUCTS SHALL CORRESPOND AS MIRROR IMAGE FROM ONE END TO THE OTHER.

2. LOCATIONS OF DUCT BANKS ENTERING MANHOLES SHALL BE COORDINATED WITH SYSTEMS ENGINEER, OR HIGH VOLTAGE SHOP.

SEE ALSO "DUCT REINFORCING AT MANHOLES, VAULTS AND BUILDINGS" DETAIL.

POWER MANHOLE
BELL END INSTALLATION

NO SCALE

26054319.DGN

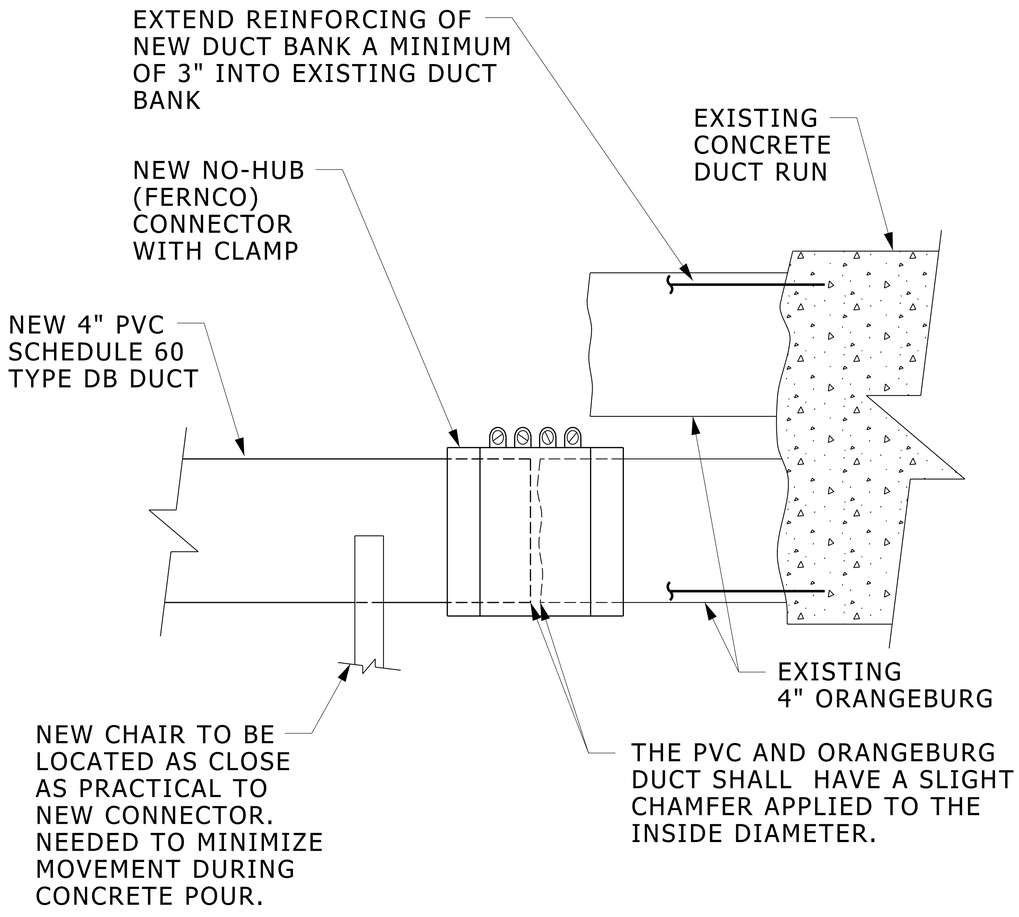

NOTES:

NEW DUCT BANK CONCRETE ENCASEMENT SHOULD OVERLAP EXISTING ENCASEMENT, ESPECIALLY UNDERNEATH TO GIVE ADDITIONAL SHEER STRENGTH.

CONTRACTOR MAY ALSO USE A 4" SCHEDULE 40 PVC COUPLING WITH THE INSIDE BORED TO THE O.D. OF THE ORANGEBURG, OR HEAT THE COUPLING UP (GLUED TO THE END OF 4" SCHEDULE 60 TYPE DB DUCT) UNTIL IT IS SOFT ENOUGH TO BE SWEDGED OVER THE ORANGEBURG DUCT, WHEN COOL FASTEN IN PLACE USING AN ADHESIVE SEALANT TO PREVENT CONCRETE FROM PENETRATING.

IF TRANSITION REQUIRES ANY VARIATIONS TO THIS STANDARD, CONTACT UNIVERSITY OF MICHIGAN UTILITIES AND PLANT ENGINEERING ELECTRICAL SHOPS FOR APPROVAL 647-2044

ORANGEBURG TO PVC TRANSITION

NOT TO SCALE 26054320.DGN

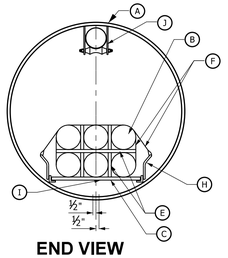

END VIEW

NOT TO SCALE

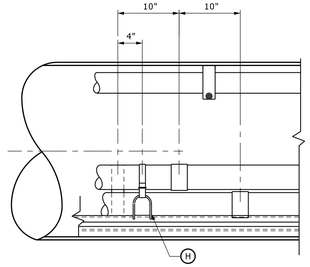

ELEVATION

NOT TO SCALE

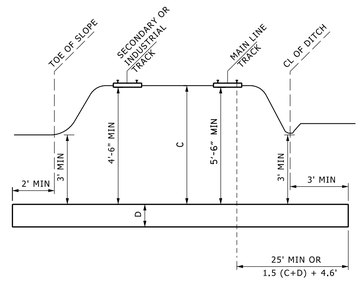

MINIMUM LENGTH & DEPTH OF CASING

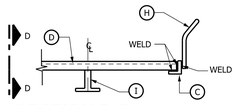

SECTION B-B

NOT TO SCALE

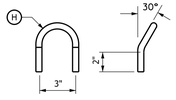

STRAPPING LOOP

(NOT TO SCALE) FABRICATED FROM ..." DIA. ⅜" DIA. REINFORCING ROD 9-3/4" LONG

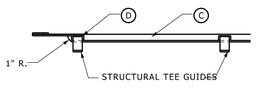

SECTION A-A

NOT TO SCALE

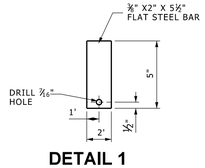

DETAIL 1

NOT TO SCALE

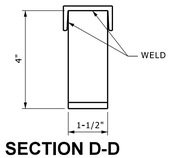

SECTION D-D

DETAIL OF TEE GUIDE

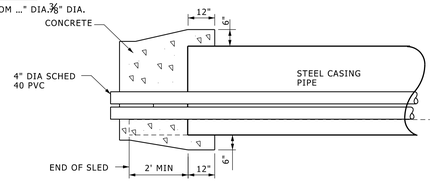

METHOD FOR SEALING CASING ENDS

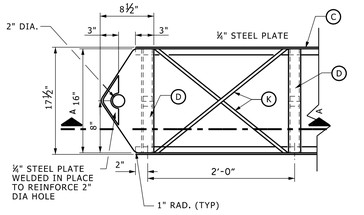

PULLING TONGUE DETAIL

NOT TO SCALE

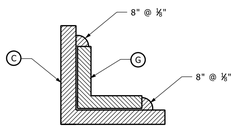

SECTION C-C

DETAIL FOR JOINING
LENGTHS OF 1-1/2" X 1-1/2"
STEEL ANGLE

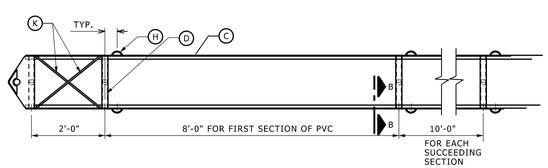

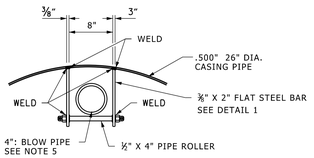

BLOW PIPE HANGER

NOT TO SCALE

MATERIALS

ITEM	DESCRIPTION
A	STEEL CASING PIPE 26" O.D. MIN .500" THICK
B	4" SCHEDULE 40 PVC CONDUIT
C	1½" X 1¼" X⅛" ANGLE STEEL 1.23LB/FT FULL LENGTH OF CASING
D	2" X 1" X⅜" CHANNEL STEEL 17½" LONG (8' OC) 2.59 LB/FT
E	VERTICAL AND HORIZONTAL SPACERS, 2" WIDE STRIPS CUT FROM1/2" BAKELITE PANEL BOARD OR OF SOME SCME OTHER EQUIVALENT MATERIAL.
F	¾" SS. STRAPPING .025" THICKNESS
G	1" X 1" X⅛" STEEL ANGLES 0'-8" LG. .80 LB/FT TO JOIN LENGTHS OF 1½" X 1½" X⅛" STEEL ANGLES.
H	STRAPPING LOOP, FABRICATED FROM⅜" DIA. REINF. BARS
I	STRUCTURAL TEE ST4 JR 3.25 LB/FT (26" CASING)
J	BLOW PIPE HANGER (SEE DETAIL FOR MATERIALS)
K	¾" DIA. REINFORCING BARS

CONSTRUCTION NOTES (CASING):

1. AUGERS OR SIMILAR DEVICES USED FOR PIPE IMPLACEMENT SHALL BE PROVIDED WITH MECHANICAL ARRANGEMENT THAT WILL PREVENT THE CUTTING HEAD FROM LEADING THE PIPE SO THAT THERE WILL BE NO UNSUPPORTED EXCAVATION AHEAD OF PIPE.
2. THE USE OF WATER OR OTHER LIQUIDS TO FACILITATE THE CASING IMPLACEMENT AND SOIL REMOVAL IS PROHIBITED.
3. WHEN AN OBSTRUCTION IS ENCOUNTERED DURING INSTALLATION, AND IT BECOMES EVIDENT THAT IT IS IMPOSSIBLE TO ADVANCE THE PIPE , ALL OPERATIONS WILL CEASE , THE CASING PIPE SHALL BE ABANDONED IN PLACE AND FILLED COMPLETELY WITH 1:6 GROUT.
4. AFTER CONDUIT IS PULLED INTO PLACE VIA THE CONDUIT SLED, CASING PIPE IS TO BE COMPLETELY FILLED WITH PRESSURE GROUTING WITH A UNIFORM 1:6 MIXTURE.
5. GROUT PUMP TO BE MONITORED BY PRESSURE GUAGE, PRESSURE NOT TO EXCEED 100 PSI.
6. CONTRACTOR MAY SUBSTITUTE SLED AND SPACERS WITHIN CASING PIPE WITH BORING SPACERS MANUFACTURED BY UNDERGROUND DEVICES, CONTRACTOR MUST FOLLOW MANUFACTURERS INSTALLATION GUIDELINES.

CASING PIPE

NOMINAL DIAMETER OF CASING PIPE (INCHES)	MINIMUM WALL THICKNESS (INCHES)
UNDER 14	0.250
14, 16 & 18	0.312
20 & 22	0.375
24, 26, 28, & 30	0.500
32 & 34	0.563
36, 38, 40, 42 & 48	0.625

CASING DETAILS

(TYPICAL FOR POWER & ITCOM)

NOT TO SCALE

26054321.DGN

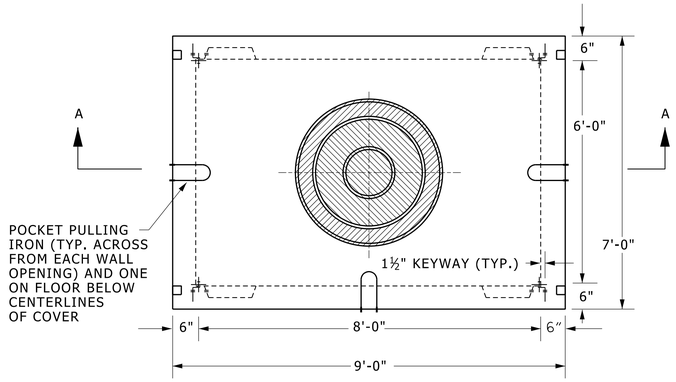

PLAN VIEW

CONCRETE: 4500 P.S.I. @ 28 DAYS

REINF: H-20 HIGHWAY LOADING
GRADE 60 REBAR
SPREAD BARS @ ALL OPENINGS

WALLS: #5 BAR @ 12" O.C. EACH WAY

ROOF AND FLOOR:
#5 BAR @ 12" O.C. LONGITUDINAL
#7 BAR @ 12" O.C. TRANSVERSE

(4) EXTRA #5 DIAGONAL BARS @ ROOF OPENING

PROVIDE HARDWARE PACKAGE

"S" BRACKETS	12
"B" BRACKETS	12
47 HOLE RACKS	10
½" x 13 x 1¼" BOLTS	24
½" x 13 NUTS	24
½" x 13 x 1¾" BOLTS	52
8'-9" HOOKED LADDER (CONFIRM LENGTH)	1
STEP	1

1" DIA. BUTYL RUBBER ROPE MASTICS PROVIDED TO INSURE WATERTIGHT SEALS.

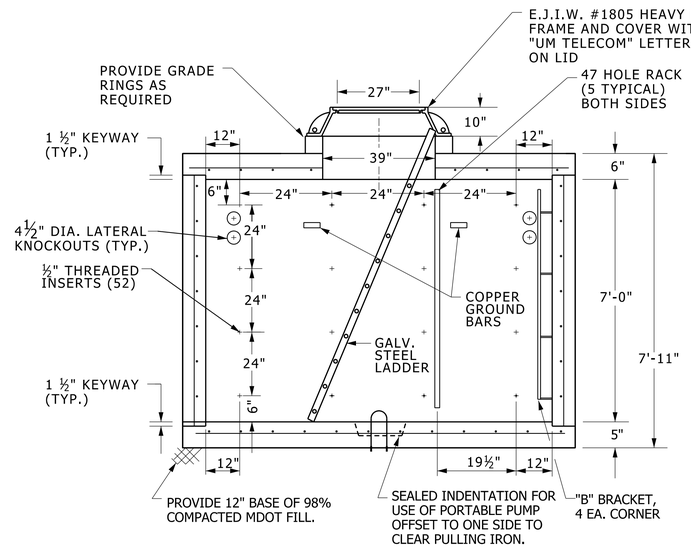

SECTION A-A

GENERAL NOTES:

1. INSTALL ONE PULLING IRON IN EACH WALL OPPOSITE EACH PRESENT & FUTURE DUCT RUN OUT OF MANHOLE, ALSO ON FLOOR CENTERED UNDER COVER

2. SEE DUCT PLAN DRAWING SHOWING PLANNED & FUTURE DUCT ENTRANCES. ON CURRENTLY PLANNED DUCTS, PROVIDE OPENING SIZED & CONSTRUCTED AS NOTED IN DETAIL 16110015. ON FUTURE DUCT RUNS, PROVIDE KNOCKOUTS SIZED AS NOTED FOR MAXIMUM OF 8 DUCTS.

3. DUCT BANKS SHALL ONLY ENTER MANHOLE ON SHORT (4'-0") SIDES OF MANHOLE.

4. BELL ENDS ARE NOT REQUIRED.

8' x 6' x 7' PRE-CAST TELECOMMUNICATIONS MANHOLE

NO SCALE

26054323.dgn

811®

Know what's below.
Call before you dig.

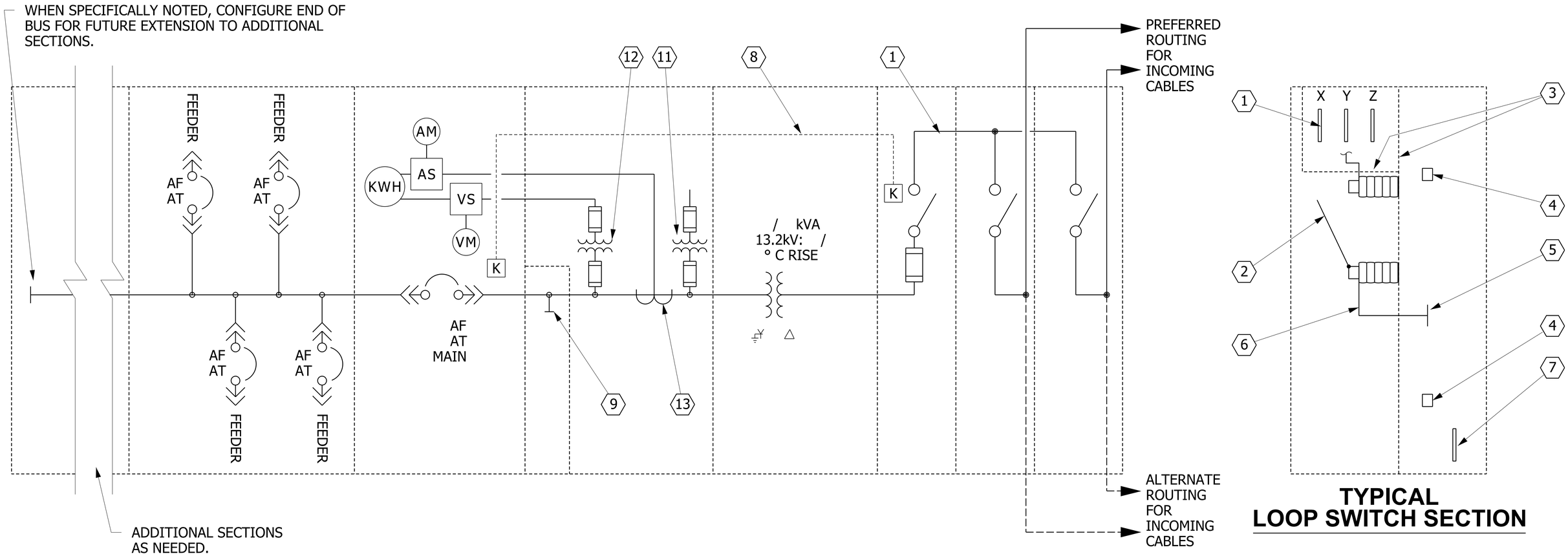

TYPICAL LOOP SWITCH SECTION

NOTES:

1. MEDIUM VOLTAGE "THRU" BUS
2. DISCONNECT SWITCH
3. BARRIERS TO COMPLETELY ISOLATE CABLE COMPARTMENT FROM MAIN BUS.
4. NON-METALLIC CABLE SUPPORT BRACKET
5. COMPRESSION LUGS FOR OVERHEAD OR BELOW GRADE CABLE CONNECTIONS (NEMA STANDARD 2 HOLE)
6. "BUS RUN BACK"
7. GROUND BUS, CONTINUOUS THROUGHOUT SUBSTATION.
8. KIRK KEY MAIN INTERLOCK
9. FIRE PUMP RATED TAP LUGS FOR CONNECTION TO A REMOTE DISCONNECT SWITCH FOR THE FIRE PUMP. TAP LUGS SHALL BE IN A DEDICATED, FULLY BARRIERED VERTICAL SECTION.
10. PHASING THROUGHOUT SHALL BE: X, Y, Z (A, B, C) LEFT TO RIGHT, TOP TO BOTTOM AND/OR FRONT TO BACK.
11. IF SECONDARY VOLTAGE IS GREATER THAN 208/120 VOLTS, PROVIDE CONTROL POWER TRANSFORMER (CPT) WITH PRIMARY AND SECONDARY FUSES.
12. IF SECONDARY VOLTAGE IS GREATER THAN 208/120 VOLTS, PROVIDE POTENTIAL TRANSFORMER FOR METERING WITH PRIMARY AND SECONDARY FUSES.
13. SEE SPECIFICATIONS FOR SPECIAL CT, AMMETER AND KWH METER REQUIREMENTS.

SINGLE ENDED SUBSTATION ELECTRICAL ONE-LINE DIAGRAM

NO SCALE - REVERSE END-TO-END WHEN APPROPRIATE TO MATCH PLAN VIEW

26110001.dgn

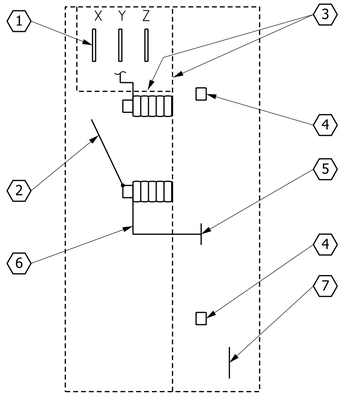

TYPICAL
LOOP SWITCH SECTION

NOTES:

1. MEDIUM VOLTAGE "THRU" BUS
2. DISCONNECT SWITCH
3. BARRIERS TO COMPLETELY ISOLATE CABLE COMPARTMENT FROM MAIN BUS.
4. NON-METALLIC CABLE SUPPORT BRACKET
5. COMPRESSION LUGS FOR OVERHEAD OR BELOW GRADE CABLE CONNECTIONS (NEMA STANDARD 2 HOLE)
6. "BUS RUN BACK"
7. GROUND BUS, CONTINUOUS THROUGHOUT SUBSTATION.
8. KIRK KEY MAIN INTERLOCK
9. FIRE PUMP RATED TAP LUGS FOR CONNECTION TO A REMOTE DISCONNECT SWITCH FOR THE FIRE PUMP. TAP LUGS SHALL BE IN A DEDICATED, FULLY BARRIERED VERTICAL SECTION.
10. PHASING THROUGHOUT SHALL BE: X, Y, Z (A, B, C) LEFT TO RIGHT, TOP TO BOTTOM AND/OR FRONT TO BACK.
11. IF SECONDARY VOLTAGE IS GREATER THAN 208/120 VOLTS, PROVIDE CONTROL POWER TRANSFORMER (CPT) WITH PRIMARY AND SECONDARY FUSES.
12. IF SECONDARY VOLTAGE IS GREATER THAN 208/120 VOLTS, PROVIDE POTENTIAL TRANSFORMER FOR METERING WITH PRIMARY AND SECONDARY FUSES.
13. SEE SPECIFICATIONS FOR SPECIAL CT, AMMETER AND KWH METER REQUIREMENTS.

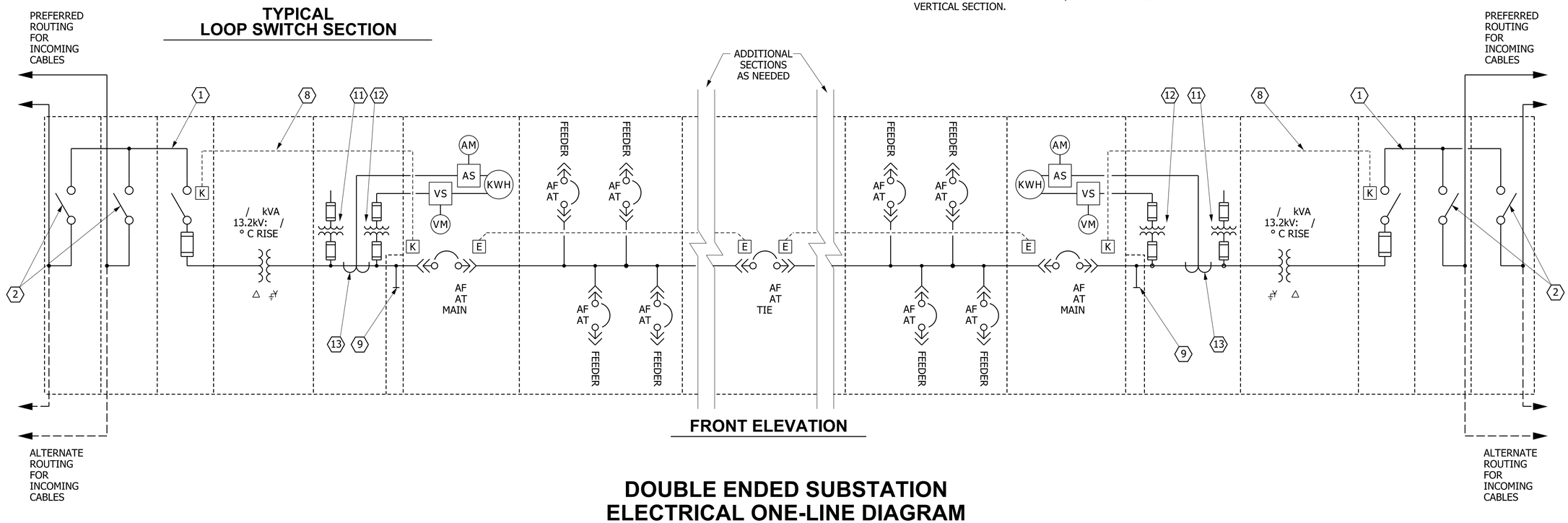

FRONT ELEVATION

DOUBLE ENDED SUBSTATION ELECTRICAL ONE-LINE DIAGRAM

NO SCALE

26110002.dgn

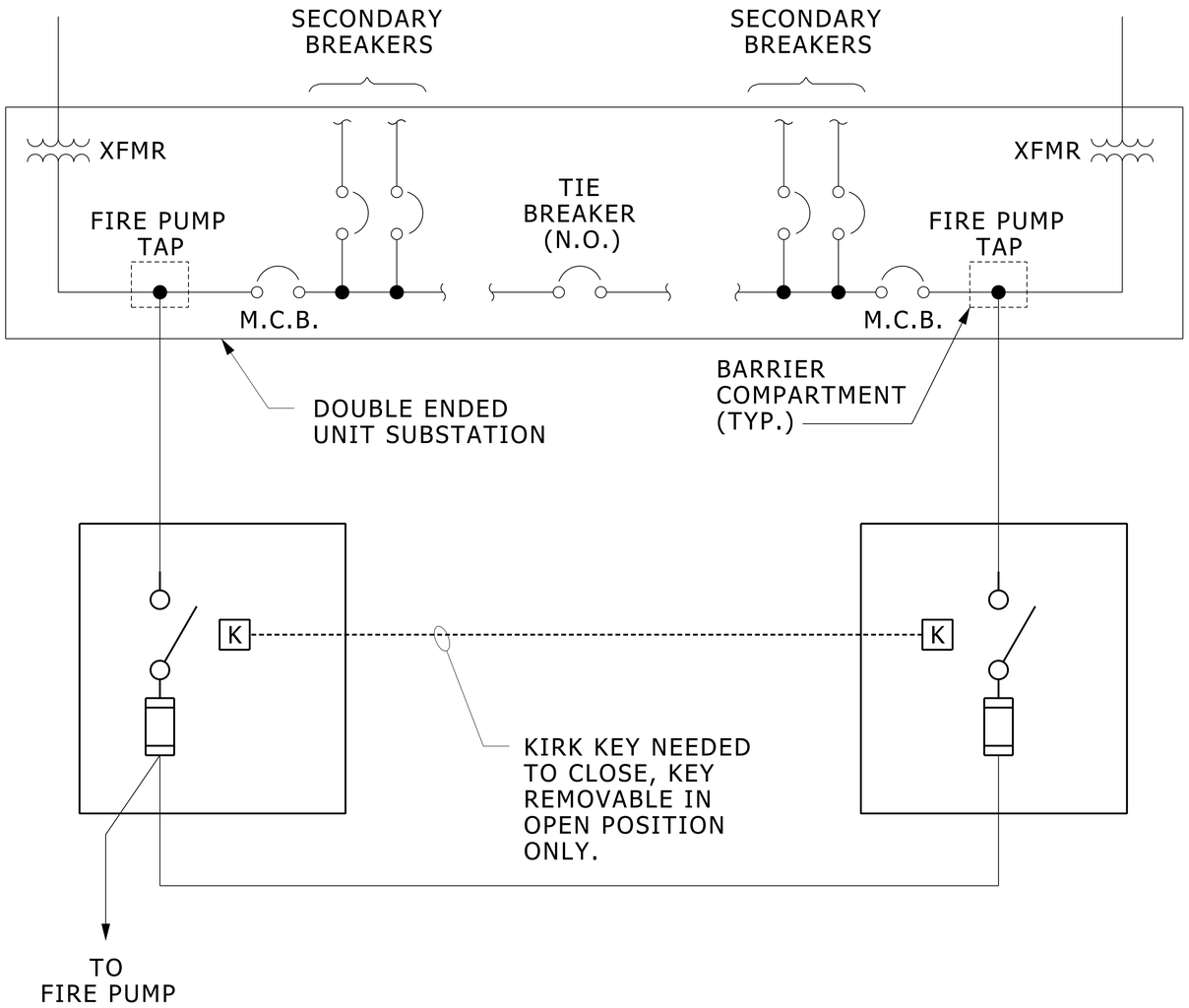

FIRE PUMP DISCONNECT SWITCHES SHALL BE RATED AS SERVICE EQUIPMENT, FUSIBLE WITH FUSES, SIZED FOR FIRE PUMP LOCKED ROTOR CURRENT, LOCKABLE IN CLOSED POSITION, EQUIPPED WITH "KIRK KEY" INTERLOCKS THAT PREVENT BOTH FROM BEING CLOSED AT THE SAME TIME, PAINTED RED, LABELED AS "FIRE PUMP DISCONNECTING MEANS" WITH 1" HIGH MINIMUM LETTERS AND LOCATED REMOTE FROM SUBSTATION. LOAD LUGS OF SWITCHES SHALL BE CABLE JUMPERED TOGETHER. TAP, JUMPER AND FEEDER CABLES SHALL BE RATED FOR 125% FIRE PUMP FLA PLUS 100% JOCKEY PUMP FLA (IF ON SAME FEEDER)

DOUBLE ENDED SUBSTATION FIRE PUMP DISCONNECT SWITCHES

NO SCALE

26110003.dgn

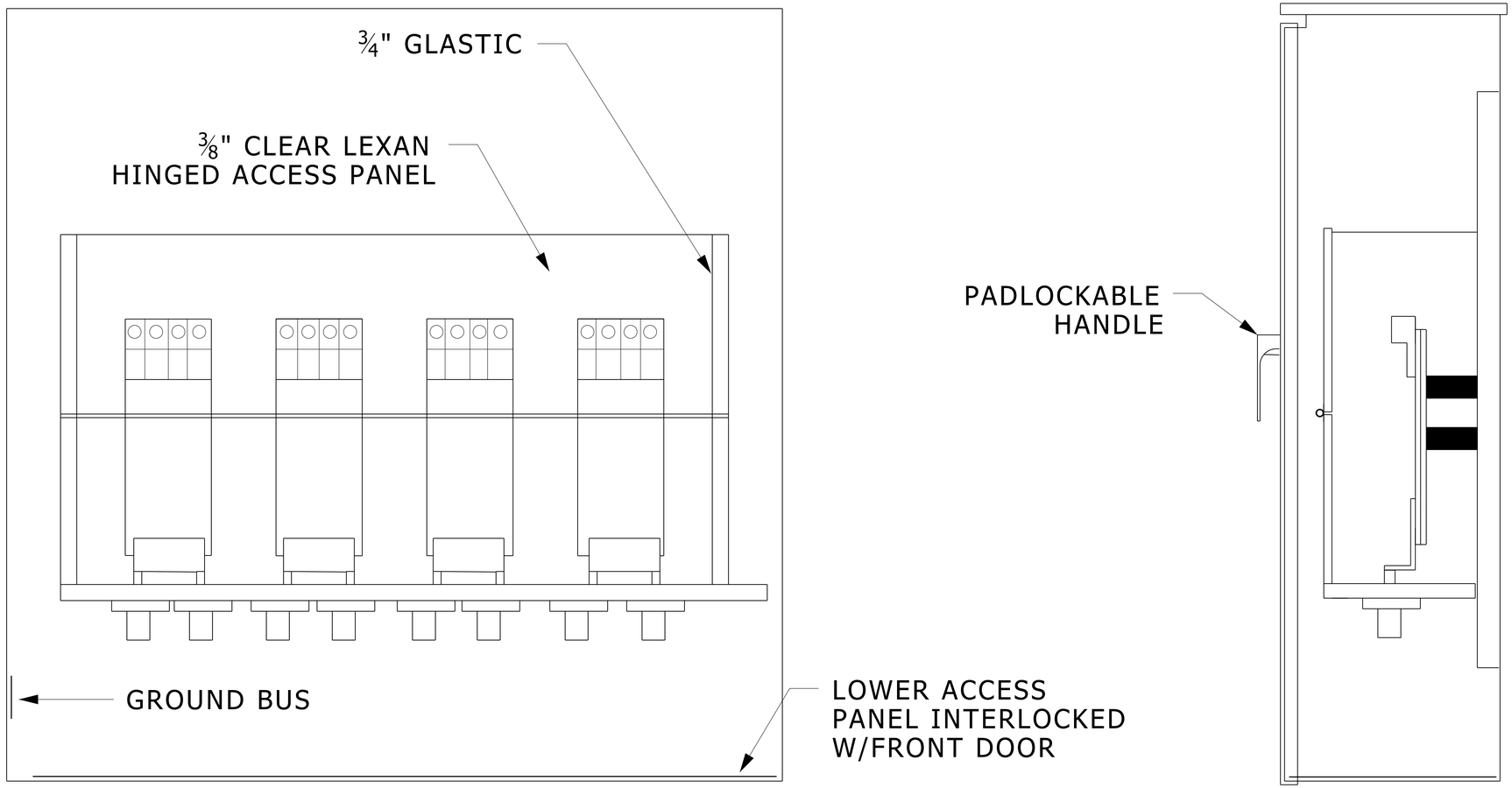

EATON,
ELECTRICAL POWER PRODUCTS, INC., OR
POWERTRON

PANEL MOUNTED LINE TERMINALS
- MALE CAM-LOK CONNECTORS
- FEMALE CABLE ENDS PROVIDED FOR UM USE
- UL LISTED - 800A 480/277V

NEMA 1 OR 3R CONSTRUCTION AS REQUIRED

MAINTENANCE BACK FEED TAP BOX

NO SCALE 26110004.dgn

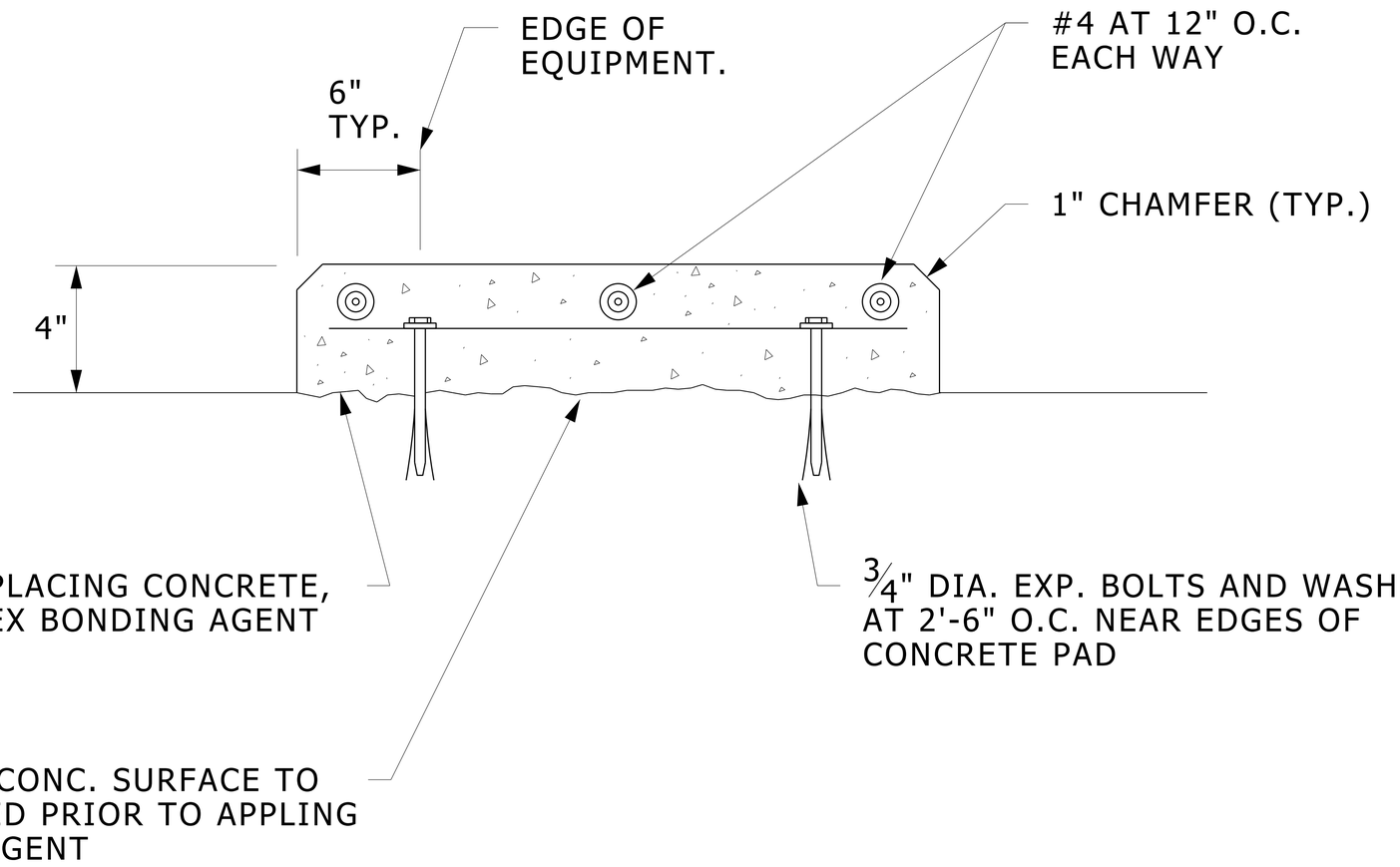

CONCRETE EQUIPMENT PAD

NO SCALE

26110005.dgn

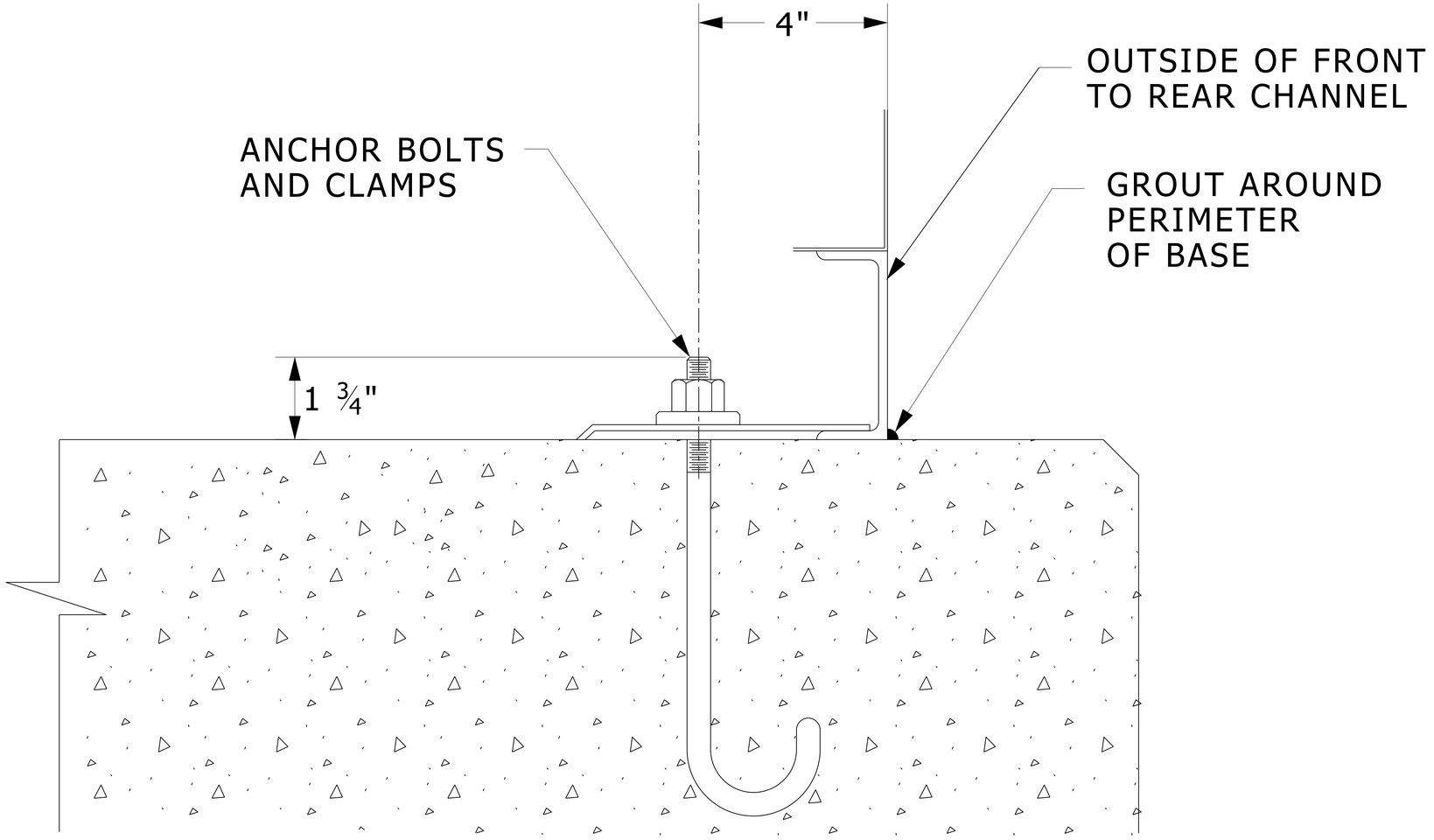

NOTE TO INSTALLER:

AFTER INSTALLATION OF SWITCHGEAR GROUT PERIMETER OF BASE ALONG LINE OF CONTACT WITH CONCRETE PAD. AND SEAL ALL CONDUIT ENTRIES, TO PREVENT MOISTURE ENTRY INTO SWITCHGEAR.

SWITCH ANCHORING DETAIL

NO SCALE

26110006.DGN

NOTE:
SEE PLANS FOR LOCATION OF
ELECTRICAL UNIT'S SUPPORT CHANNELS.

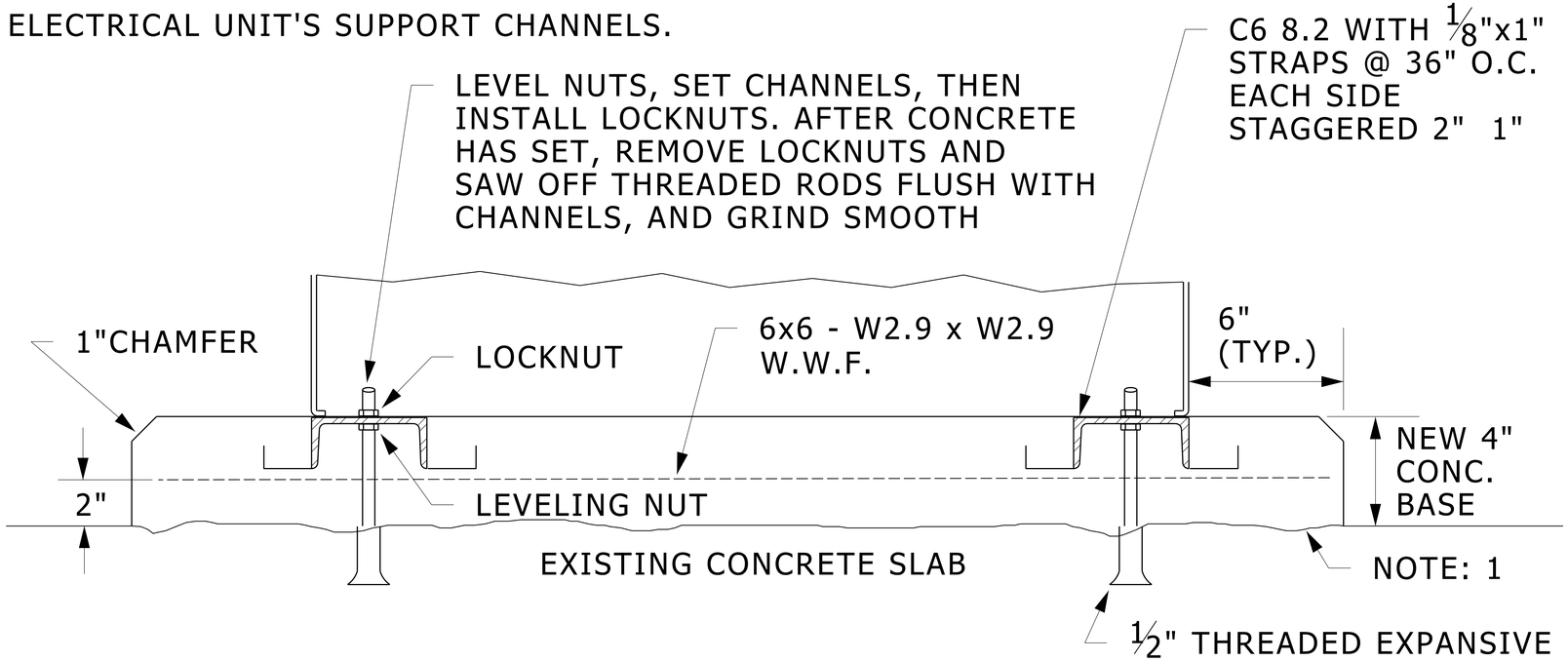

BASE DETAIL NOTES:

1. ROUGHEN AND CLEAN FLOOR CONTACT SURFACE WITH NEW CONCRETE. APPLY SPECIFIED BONDING AGENT TO TOP OF EXISTING SLAB PER MANUFACTURER'S INSTRUCTIONS.

2. THE TOP OF CHANNELS ELEVATION SHALL BE FLAT & LEVEL & IN TRUE PLANE TO EACH OTHER.

3. THE TOP OF CONC. SHALL BE LEVEL AND 0" TO ⅛" LOWER THAN THE TOP OF THE CHANNELS, NO CONCRETE SHOULD EXTEND ABOVE CHANNELS

4. CONCRETE SHALL BE NOT LESS THAN 3,000 PSI STRENGTH IN 28 DAYS.

5. OVERALL WIDTH OF PAD, SPACING OF CHANNELS, AND LENGTH OF CHANNELS SHALL ONLY BE FINALLY DETERMINED WHEN SHOP DRAWINGS ARE AVAILABLE FOR THE EQUIPMENT BEING INSTALLED ON THE PAD.

LEVELING CHANNEL DETAIL

NO SCALE

26110007.dgn

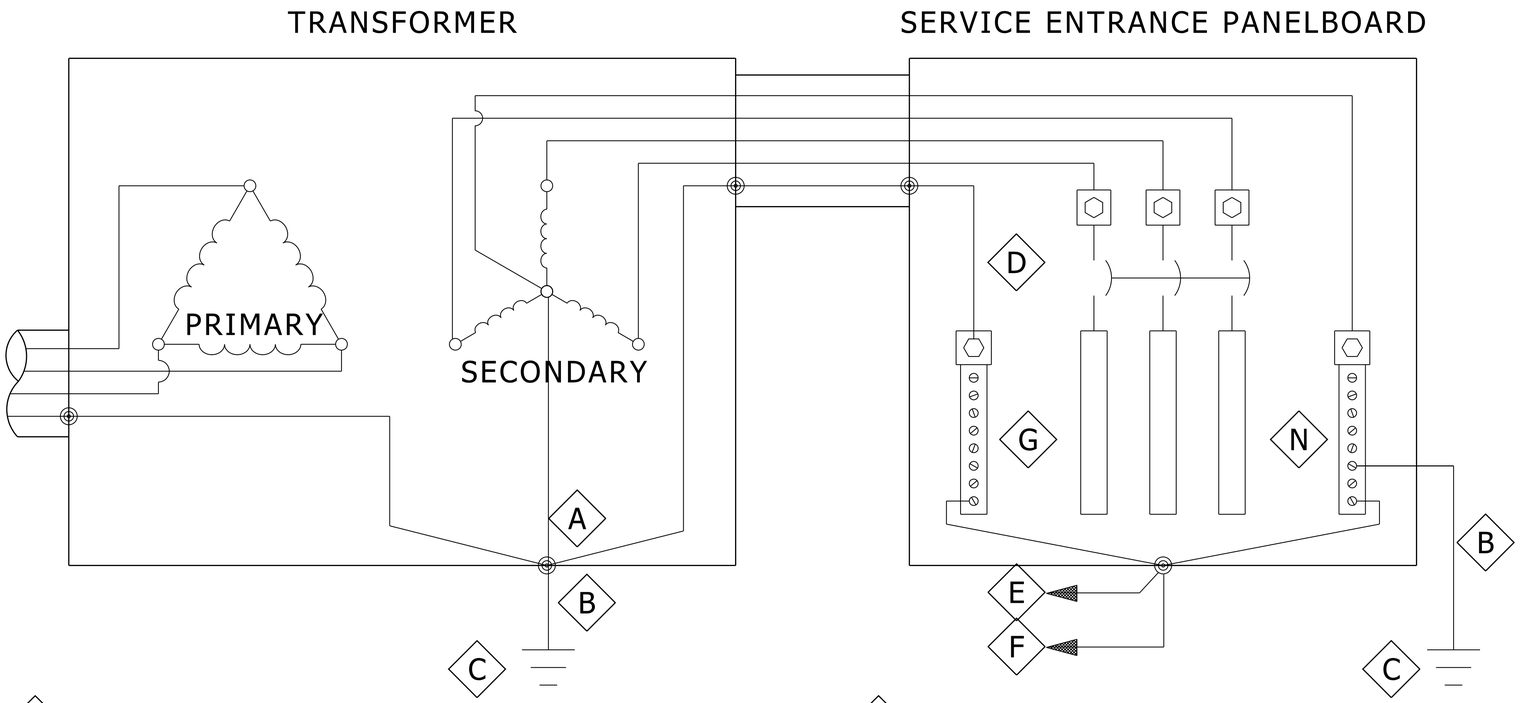

A BONDING JUMPER

B GROUNDING ELECTRODE CONDUCTOR

C GROUNDING ELECTRODE

D EQUIPMENT GROUNDING CONDUCTOR

E TO BUILDING STEEL

F TO METAL WATER PIPING SYSTEM

G EQUIPMENT GROUNDING BAR

N NEUTRAL BAR

SERVICE ENTRANCE
TYPICAL PAD MOUNT TRANSFORMER

NO SCALE

26200001.dgn

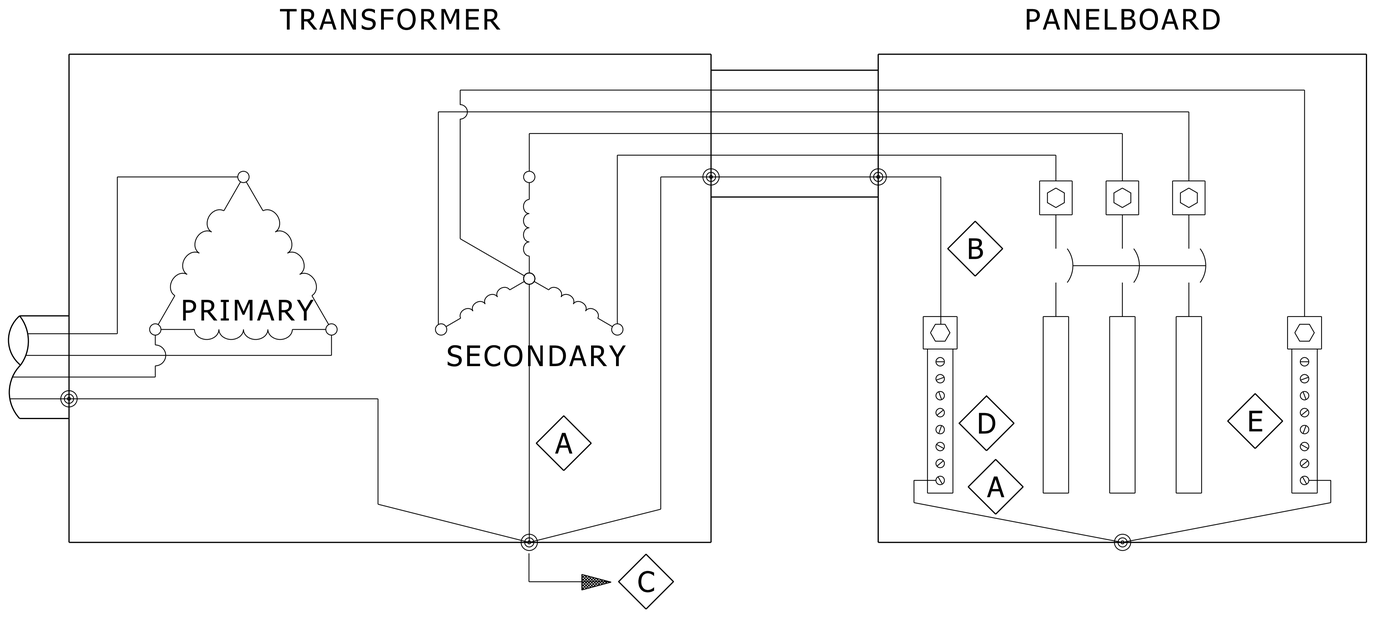

A BONDING JUMPER

B EQUIPMENT GROUNDING CONDUCTOR

C TO BUILDING STEEL

D BONDED EQUIPMENT GROUNDING BAR

E BONDED NEUTRAL BAR

TYPICAL 480/208V STEPDOWN TRANSFORMER

NO SCALE

26200002.dgn

PREFIX (ADD WHEN APPROPRIATE):

A. Campus Projects

E - Panel or equipment backed up by generator or battery inverter, e.g. ERP-1050

B. Hospital and Health Care Projects

C - Critical Branch, as defined by N.E.C. 517, e.g. CRP-1050
E - Equipment System, as defined by N.E.C. 517,e.g. ERP-1050
L - Life Safety Branch, as defined by N.E.C. 517, e.g. LRP-1050

ELECTRICAL PANELS:

A. Panel Type

DP - Distribution Panel (panel primarily feeding other panels)
IPS - Interruptible Power Supply (battery inverter)
LP - Lighting Panel (typically a 480/277V panel feeding lighting)
MCC - Motor Control Center
PP - Power Panel (panel primarily feeding loads directly)
RP - Receptacle Panel (typically a 208/120V panel feeding receptacles)
UPS - Uninterruptable Power Supply

B. Add the Substation Number - If more than 1 substation exists

C. Insert a hyphen and identify the room number

D. Insert a hyphen and add sequence # if there is more than one of that type Panel/MCC in a room

Example:

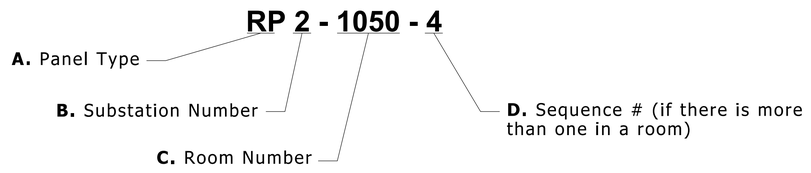

ELECTRICAL EQUIPMENT:

Transformers:

T - (Location Room #), e.g. **T-380**. If more than one transformer in room, add sequence # after room #, e.g. T-380-1

Disconnects (Safety Switches):

A. Fused: DF - (Location Room #), e.g., **DF-380**. If more than one in room, add sequence #, e.g. **DF-380-1**.
B. Non-Fused: D - (Location Room #), e.g. **D-380**. If more than one in room, add sequence #, e.g. **D-380-2.**

STANDARD PROCEDURE FOR PANEL & EQUIPMENT NAMING

26200003.dgn

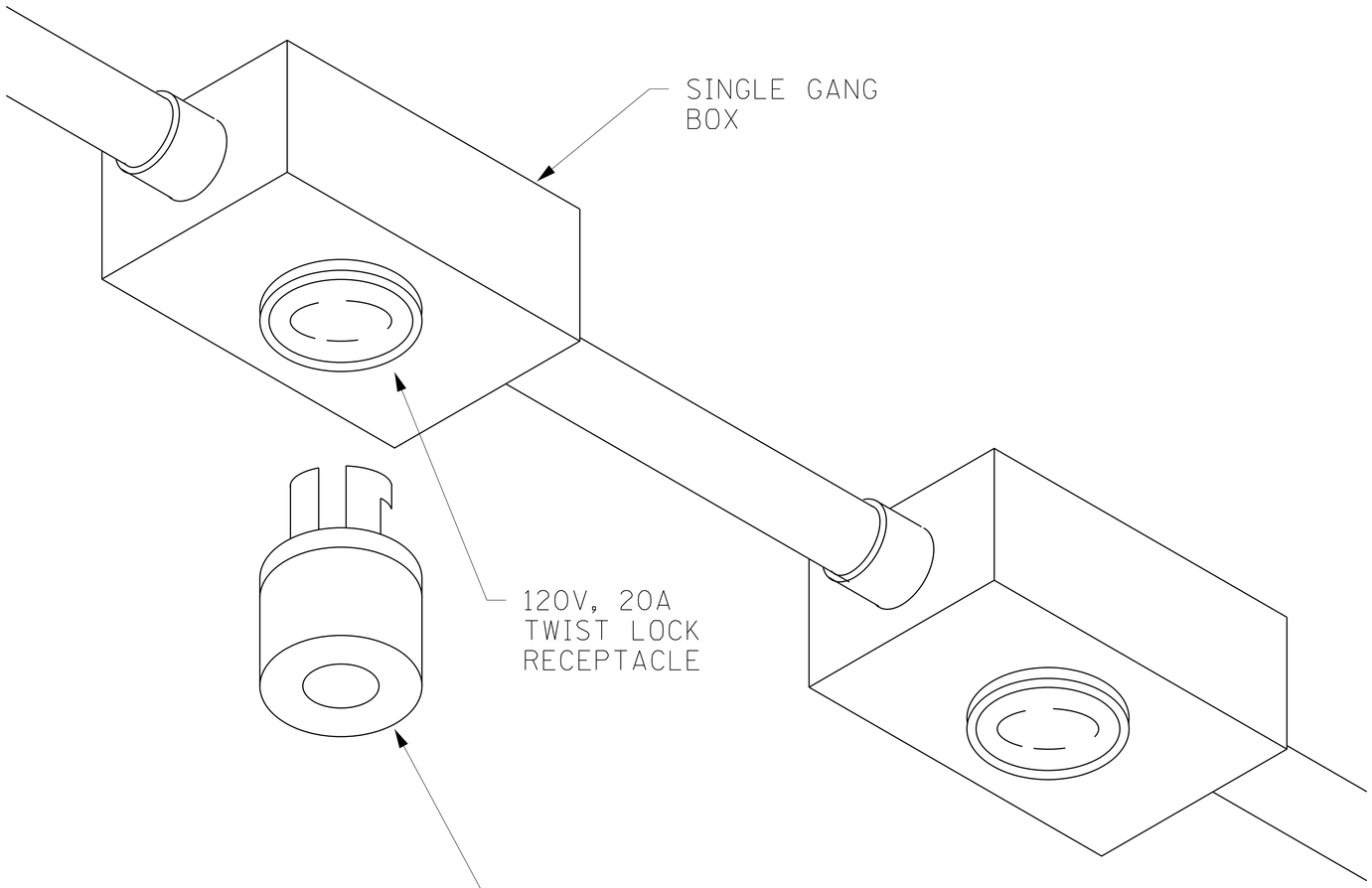

CEILING MOUNTED RECEPTACLE DETAIL

NO SCALE

26272603.dgn

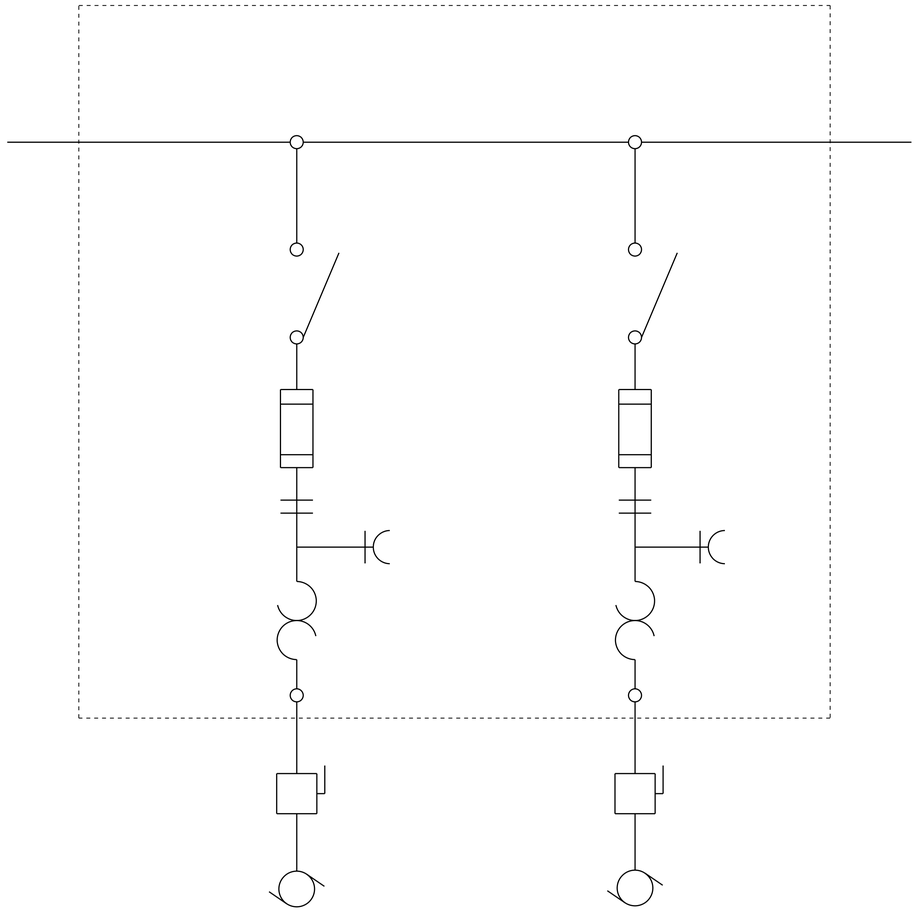

MCC ONE LINE DIAGRAM

NO SCALE

26290001.dgn

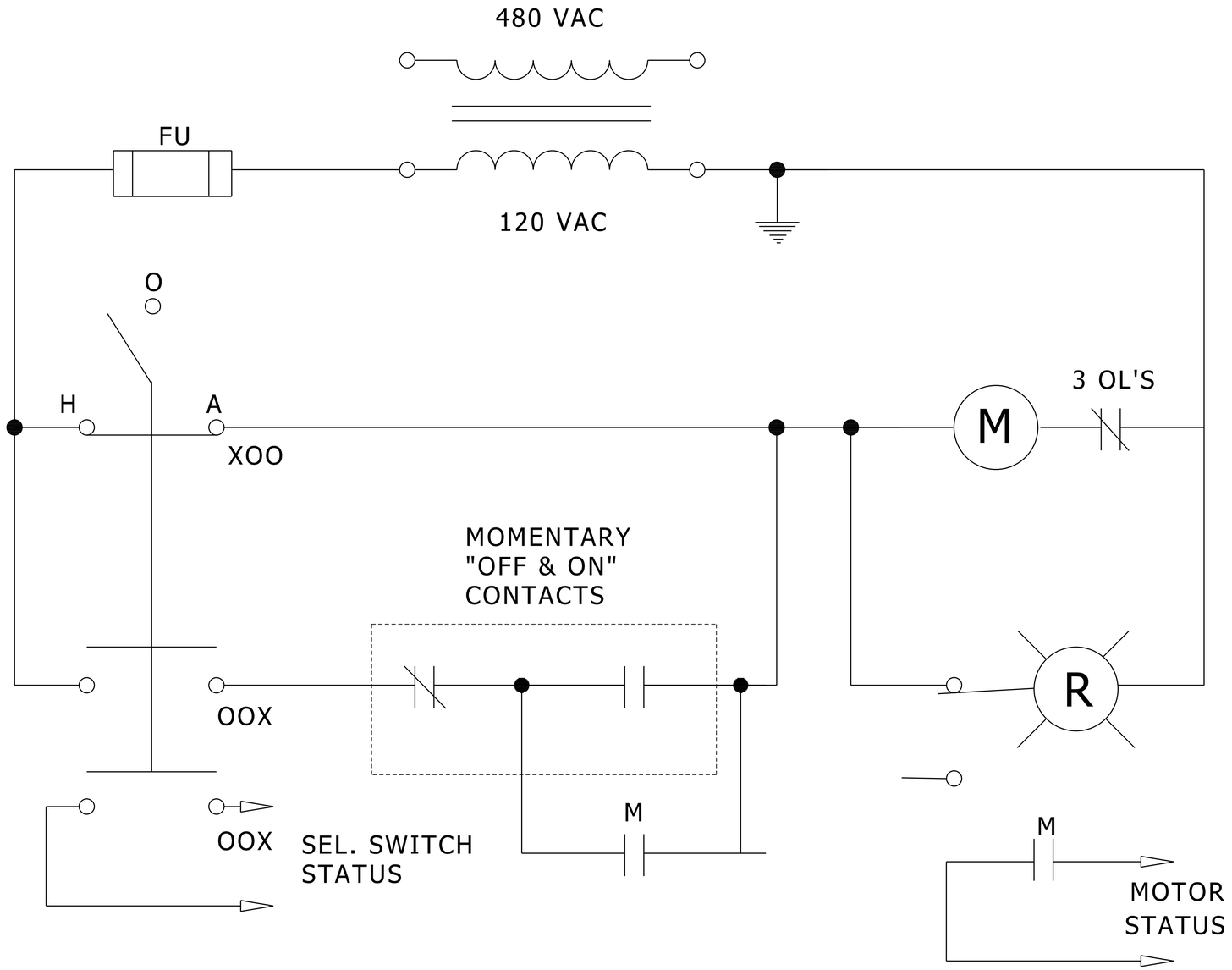

CONTROL WIRING DIAGRAM

NO SCALE

26290002.dgn

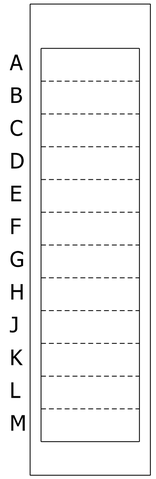

MOTOR CONTROL CENTER INSTALLATION SCHEDULE

MARK	DIMENSIONS				ELECTRICAL DATA							
	WIDTH (IN)	LENGTH (IN)	DEPTH (IN)	HEIGHT (IN)	AMPS	VOLTS	PHASE	WIRES	NEU	GND	MLO	MCB
									X	X	X	X

MOTOR CONTROL CENTER COMPONENT SCHEDULE

UNIT	STARTER CLASS	SIZE	HMC FEEDER BREAKER - OR - SWITCH AMPERES	MOTOR HORSE POWER	EXTRA INTER LOCKS		CONTROL DEVICES														NAMEPLATE IDENTIFICATION
							PUSH BUTTON			SELECTOR SWITCHES				INDICATOR LIGHTS					METERS		
					NO	NC	START-STOP	FWD-REV-STOP	FAST-SLOW-STOP	HAND-OFF-AUTO	ON-OFF	FWD-OFF-REV	FAST-OFF-SLOW	GREEN-STOPPED	RED-RUN,FWD,FAST	AMBER-REV. SLOW	PUSH TO TEST	XFMR TYPE	ELAPSED TIME	AMMETER	EXTRA VA ON CPT	
1					X	X	X	X	X	X	X	X	X	X	X	X	X	X	X	X	X	
2																						
3																						
4																						
5																						
6																						
7																						
8																						
9																						
10																						
11																						
12																						

MOTOR CONTROL CENTER INSTALLATION DETAIL

NO SCALE

26290003.dgn

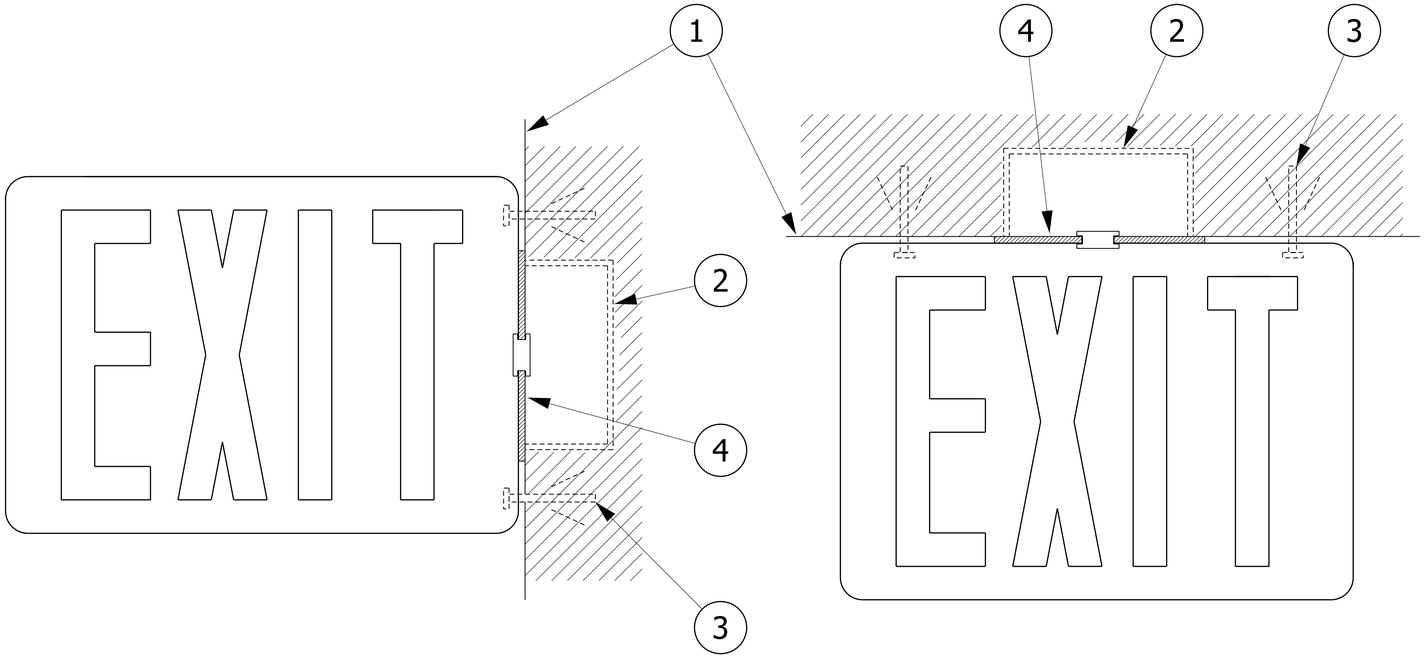

NOTES:

A. PROVIDE POWER TO EXIT LIGHT WITH 2-#12 + 1-#12 GROUND.

1. EXISTING CEILING OR WALL.
2. PROVIDE GROUNDED BOX FOR MOUNTING.
3. HEAVY-DUTY ANCHORS.
4. JUNCTION BOX COVER PLATE.

TYPICAL EXIT SIGN MOUNTING DETAIL

NO SCALE

26510001.dgn

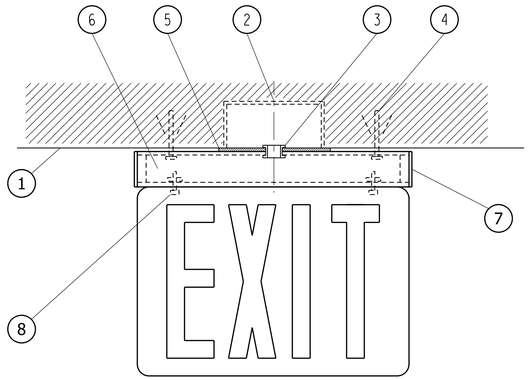

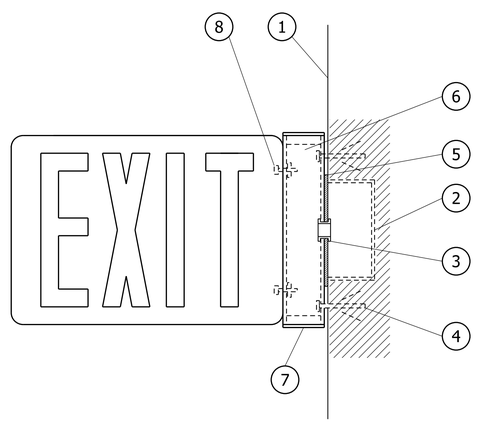

NOTES:

A. PREPARE AND PAINT UNISTRUT, END CAPS & JUNCTION BOX COVER PLATE WITH TWO COATS OF "OFF WHITE" TO MATCH EXIT LIGHT.

B. PROVIDE POWER TO EXIT LIGHT WITH 2#12 & #12 GROUND.

1. EXISTING DOOR OR WALL.
2. EXISTING JUNCTION BOX. GROUND BOX IF NOT GROUNDED.
3. ½" THREADED PIPE BETWEEN UNISTRUT & JUNCTION BOX WITH LOCK NUTS AND BUSHINGS.
4. HEAVY-DUTY ANCHORS.
5. JUNCTION BOX COVER PLATE.
6. 1 5/8" x 13/16" UNISTRUT P4000 CUT TO LENGTH OF FIXTURE.
7. UNISTRUT WIREWAY END CAP P42800W (TYP. FOR 2)
8. UNISTRUT 3/8" BOLT & NUT P4008 (TYP. FOR 2)

STUDENT HOUSING
EXIT SIGN MOUNTING DETAIL

NO SCALE

26510002.dgn

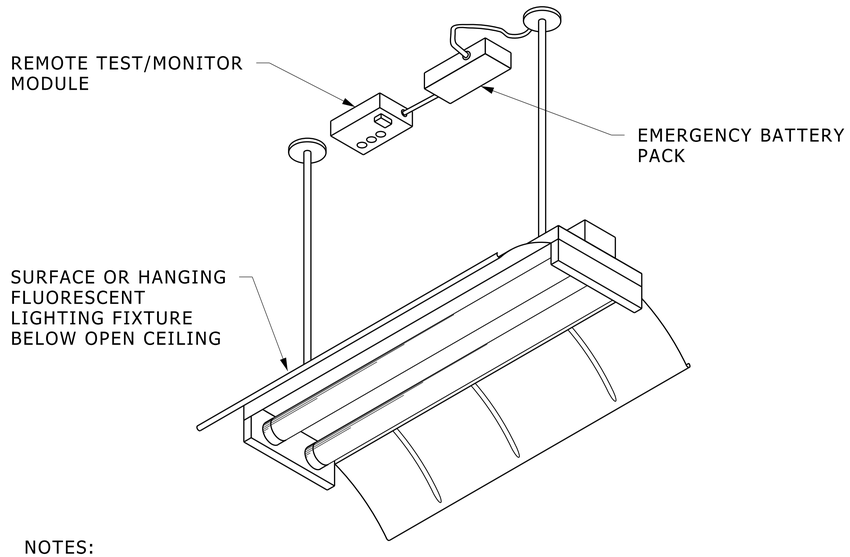

NOTES:

1. INSTALL REMOTE TEST/MONITOR MODULE IN A SINGLE GANG BOX.
2. MOUNT EMERGENCY BATTERY PACK ON TOP OF THE FIXTURE HOUSING, ON AN ADJACENT WALL OR ON BUILDING STRUCTURAL MEMBERS. IT SHALL NOT BE MOUNTED TO MECHANICAL EQUIPMENT OR THE SUSPENDED CEILING SYSTEM.
3. IF SUSPENDED CEILING EXISTS, CENTER REMOTE TEST/MONITOR MODULE IN ADJACENT CEILING TILE.
4. LOCATE REMOTE TEST/MONITOR MODULES IDENTICALLY SO THAT THEY FORM A STRAIGHT LINE WHEN VIEWED FROM END OF CORRIDOR OR ROOM.

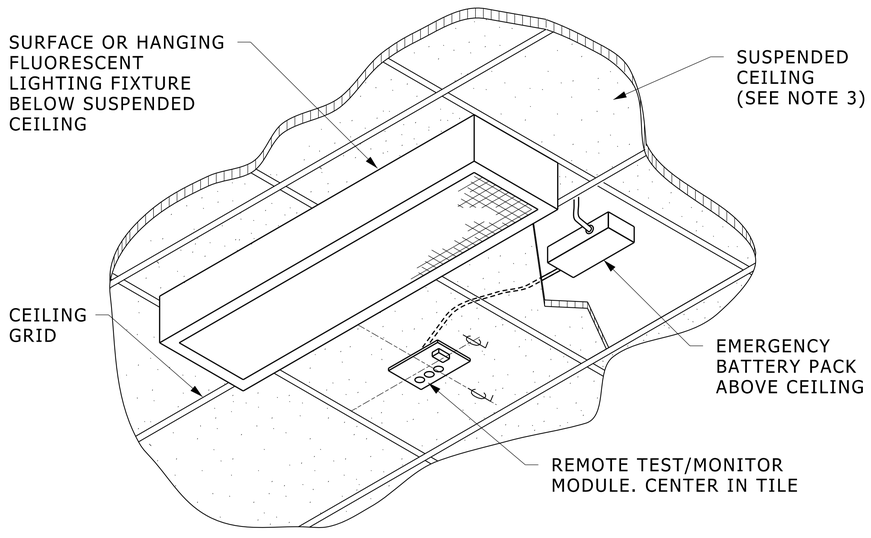

TYPICAL SURFACE OR HANGING EMERGENCY LIGHTING FIXTURE

NO SCALE

26510003.dgn

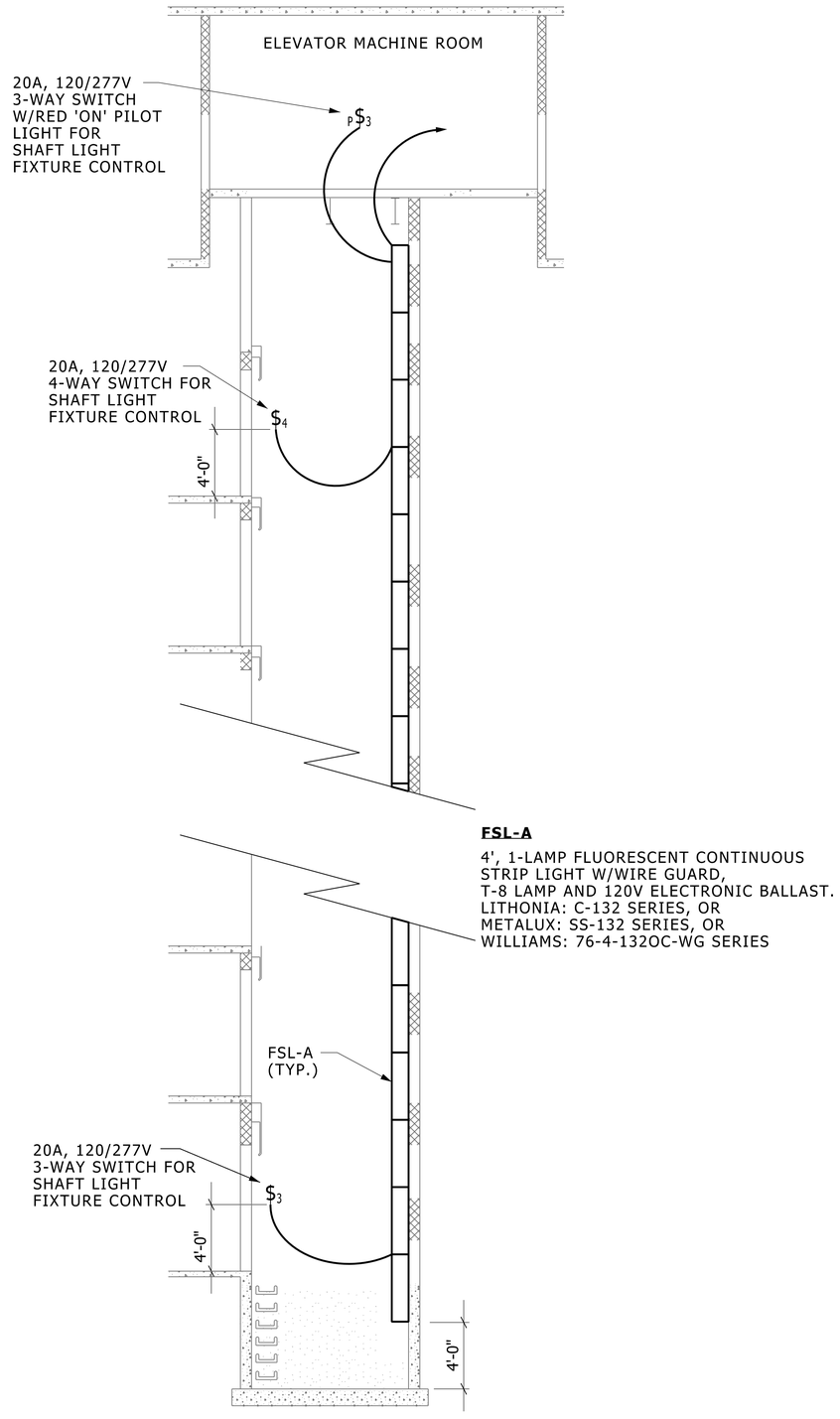

ELEVATOR SHAFT LIGHTING

NO SCALE

2651004.001

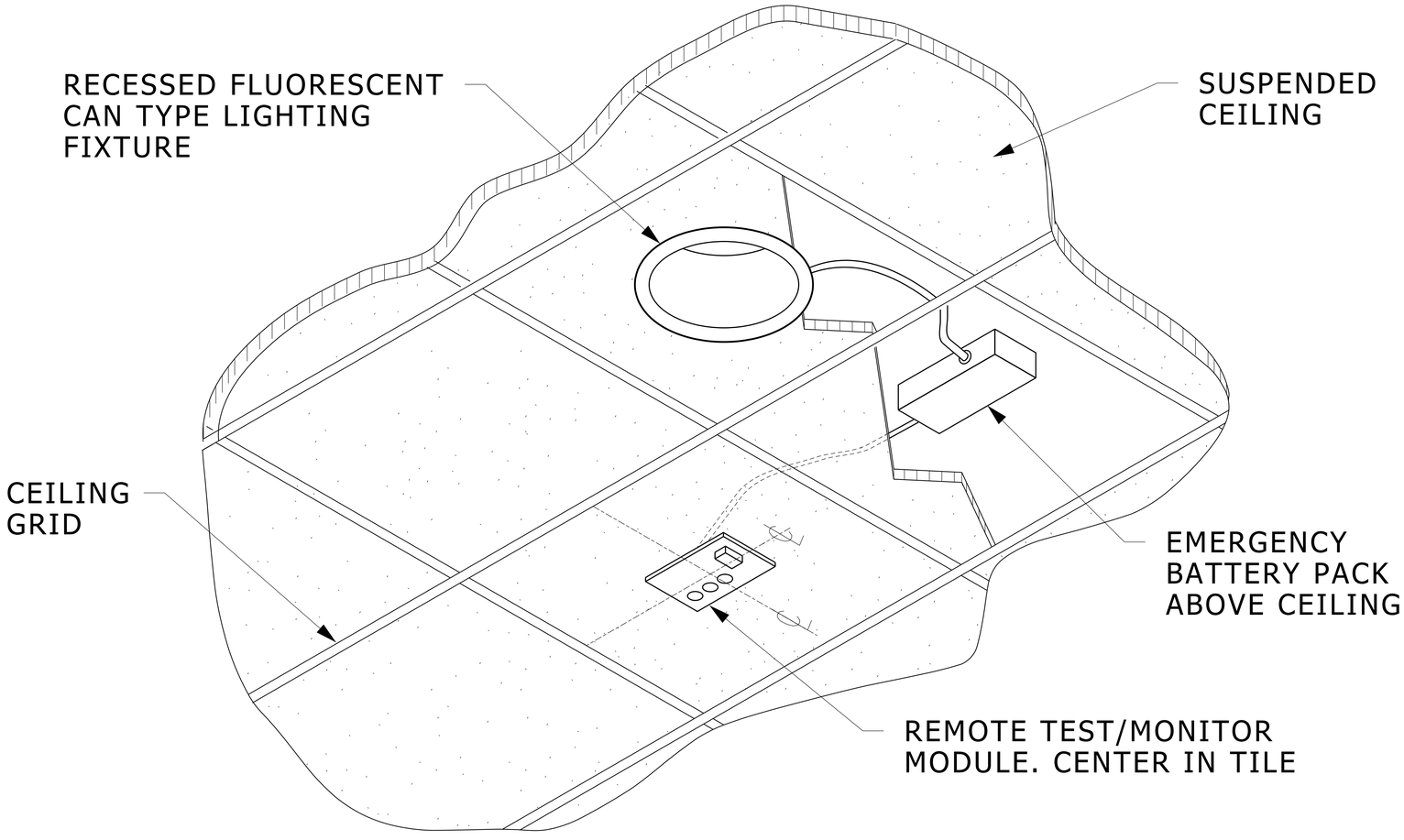

NOTES:

1. INSTALL REMOTE TEST/MONITOR MODULE IN A SINGLE GANG BOX.

2. MOUNT EMERGENCY BATTERY PACK ON TOP OF THE FIXTURE HOUSING, ON AN ADJACENT WALL OR ON BUILDING STRUCTURAL MEMBERS. IT SHALL NOT BE MOUNTED TO MECHANICAL EQUIPMENT OR THE SUSPENDED CEILING SYSTEM.

3. LOCATE REMOTE TEST/MONITOR MODULES IDENTICALLY SO THAT THEY FORM A STRAIGHT LINE WHEN VIEWED FROM END OF CORRIDOR OR ROOM.

RECESSED EMERGENCY LIGHTING FIXTURE

NO SCALE

26510005.dgn

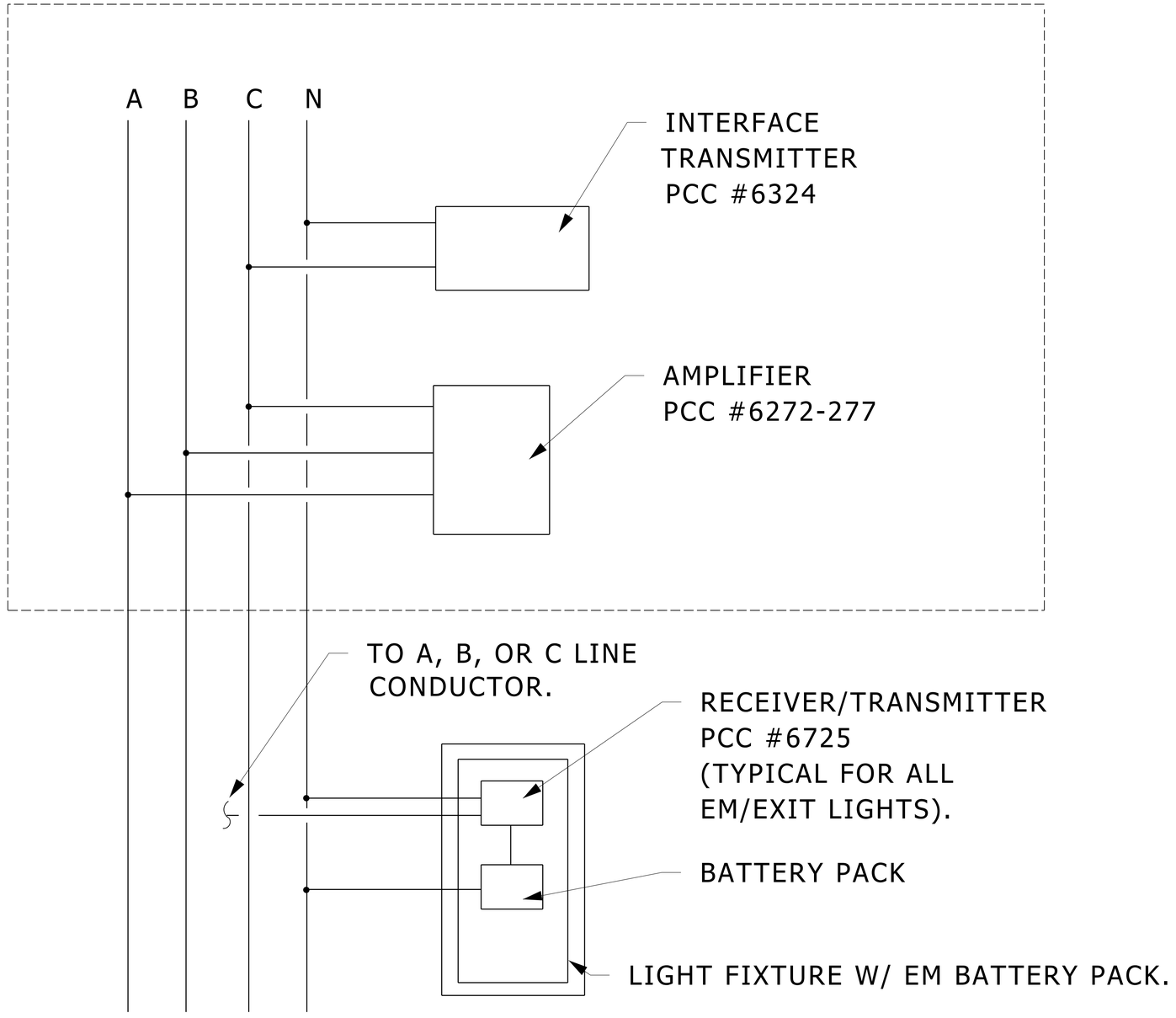

NOTE:

FOR INFORMATION ABOUT PCC (POWERLINE CARRIER COMPONENTS) CONTACT
TOM ROGERS OF ACCURATE CONTROLS AT (414) 295-6601.

EMERGENCY LIGHT BATTERY EXERCISER

NO SCALE

26510006.dgn

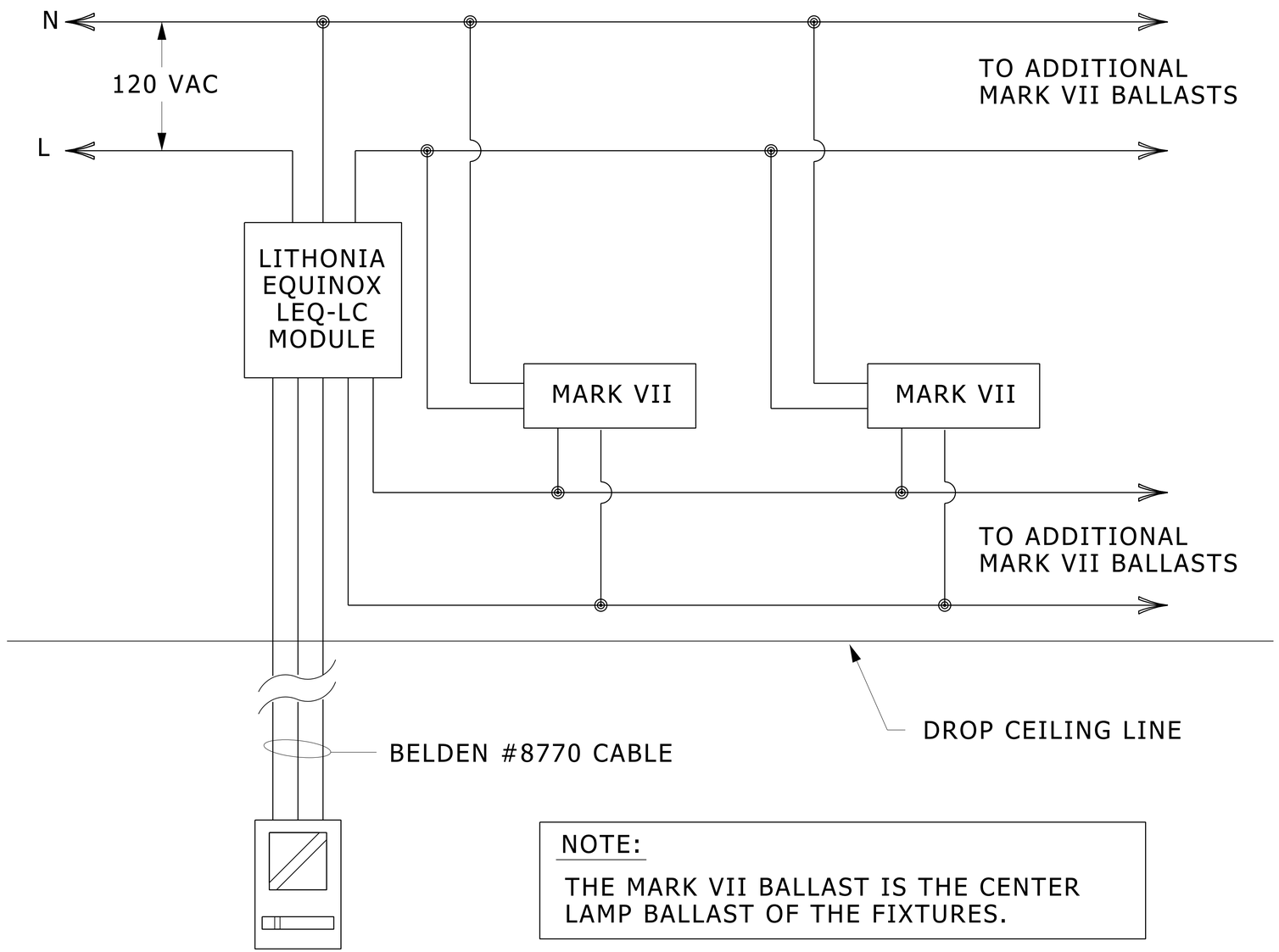

NOTE:

THE MARK VII BALLAST IS THE CENTER LAMP BALLAST OF THE FIXTURES.

INNER LAMP SWITCHING/DIMMING DETAIL

NO SCALE

26510007.dgn

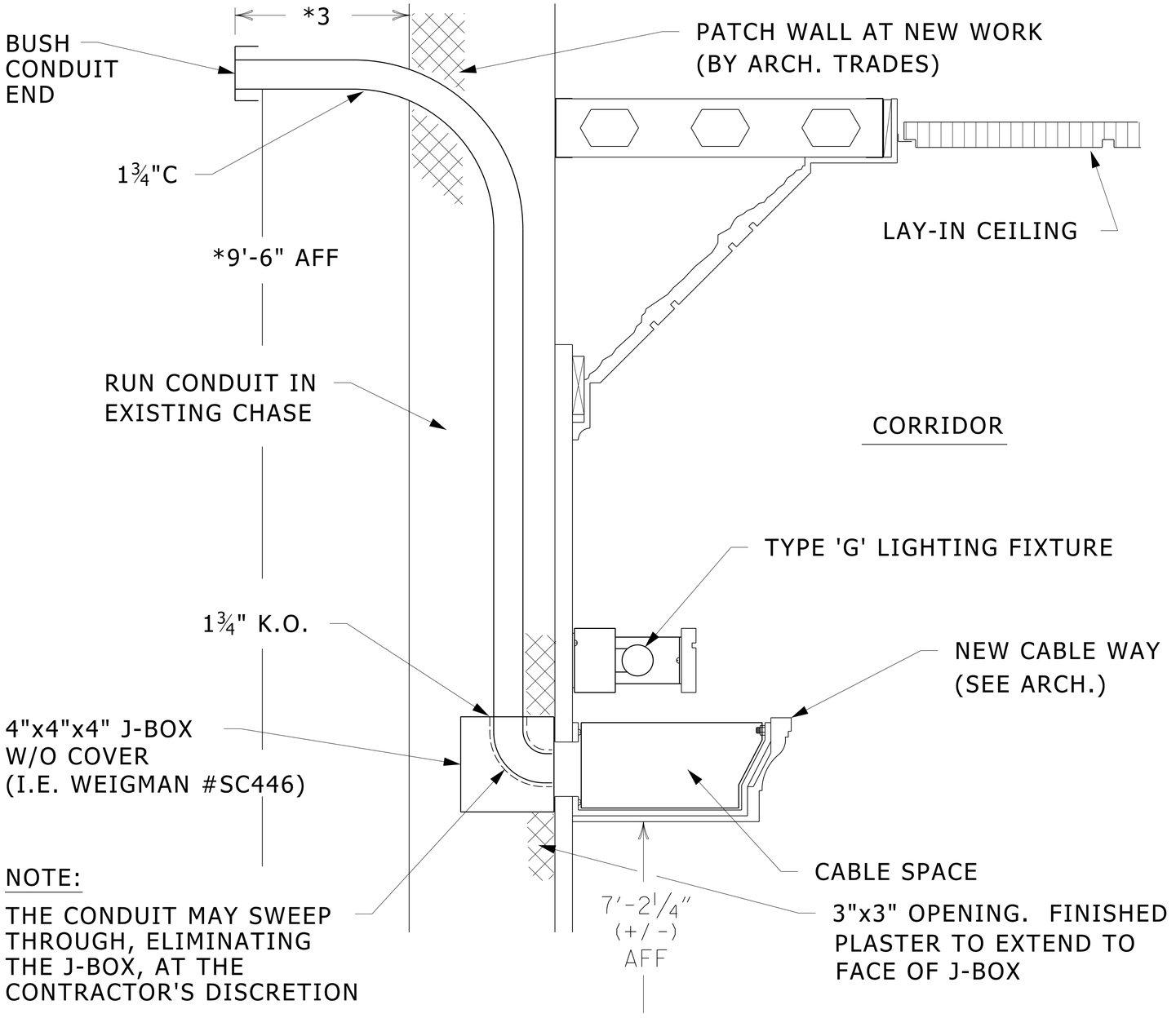

NOTE:

THE CONDUIT MAY SWEEP THROUGH, ELIMINATING THE J-BOX, AT THE CONTRACTOR'S DISCRETION

CABLE WAY/HALLWAY COVE LIGHT DETAIL

NO SCALE

26510008.dgn

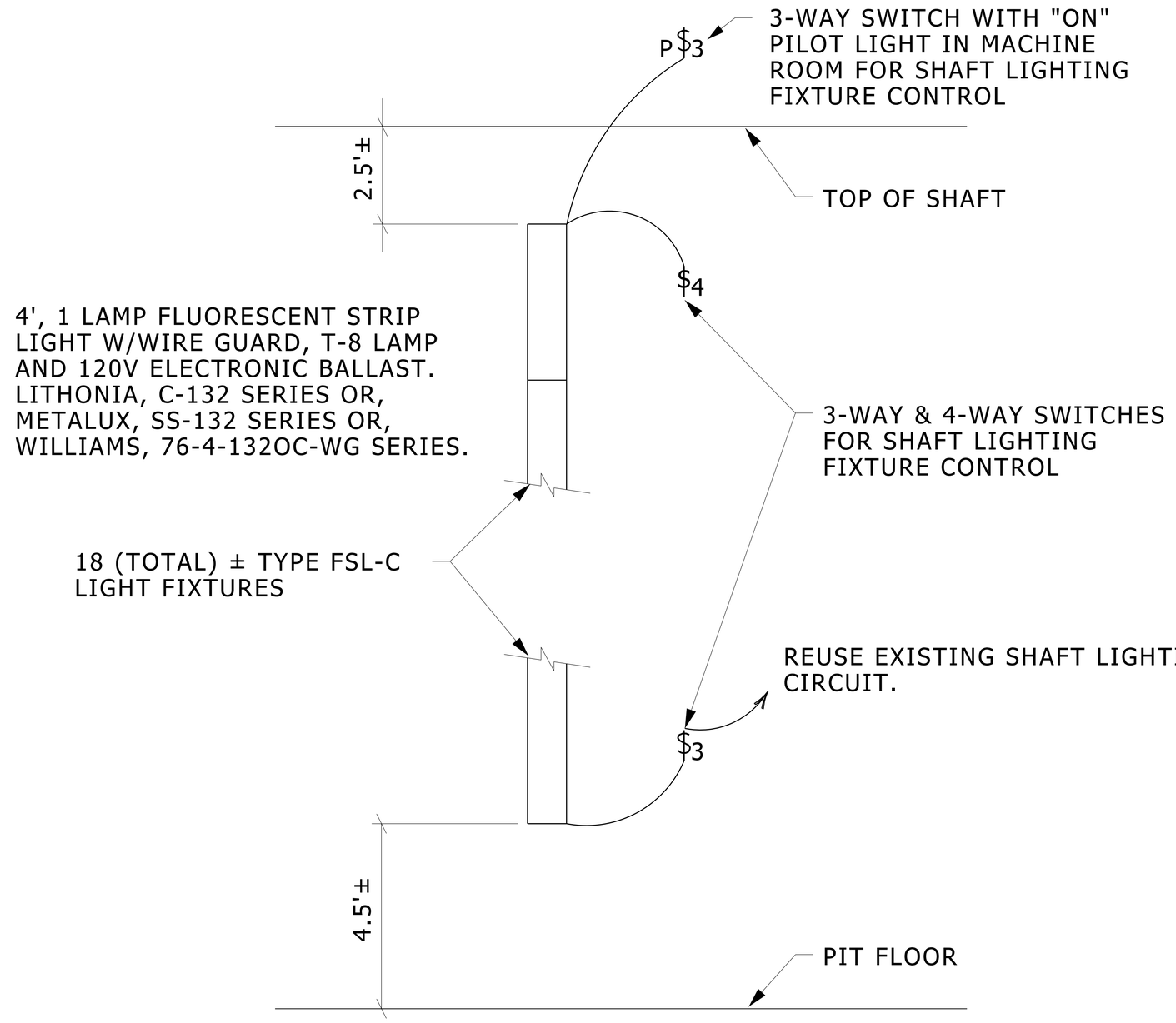

ELEVATOR SHAFT - LIGHTING DETAIL

NO SCALE

26510009.dgn

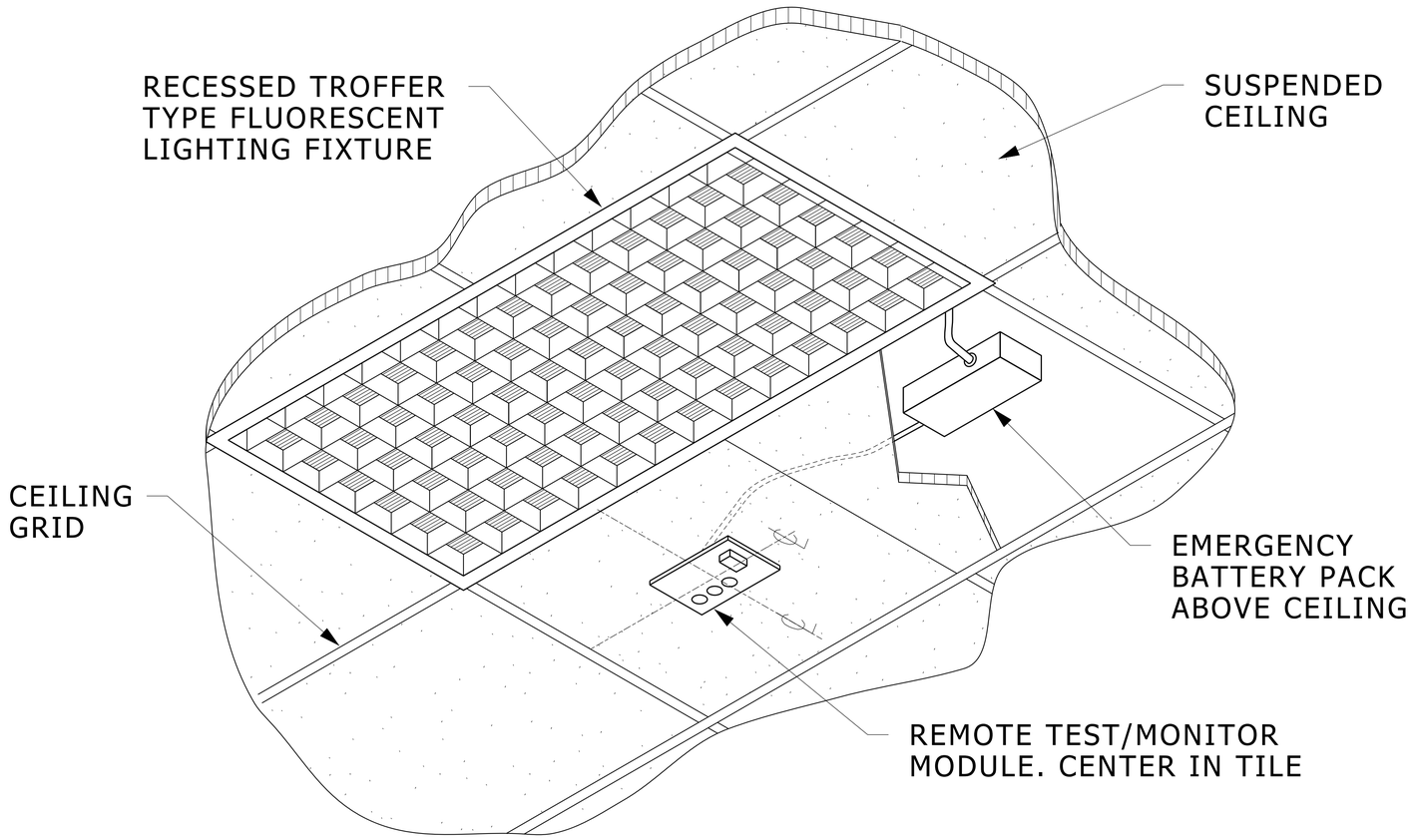

NOTES:

1. INSTALL REMOTE TEST/MONITOR MODULE IN A SINGLE GANG BOX.

2. MOUNT EMERGENCY BATTERY PACK ON TOP OF THE FIXTURE HOUSING, ON AN ADJACENT WALL OR ON BUILDING STRUCTURAL MEMBERS. IT SHALL NOT BE MOUNTED TO MECHANICAL EQUIPMENT OR THE SUSPENDED CEILING SYSTEM.

3. LOCATE REMOTE TEST/MONITOR MODULES IDENTICALLY SO THAT THEY FORM A STRAIGHT LINE WHEN VIEWED FROM END OF CORRIDOR OR ROOM.

RECESSED EMERGENCY LIGHTING FIXTURE

NO SCALE

26510010.dgn

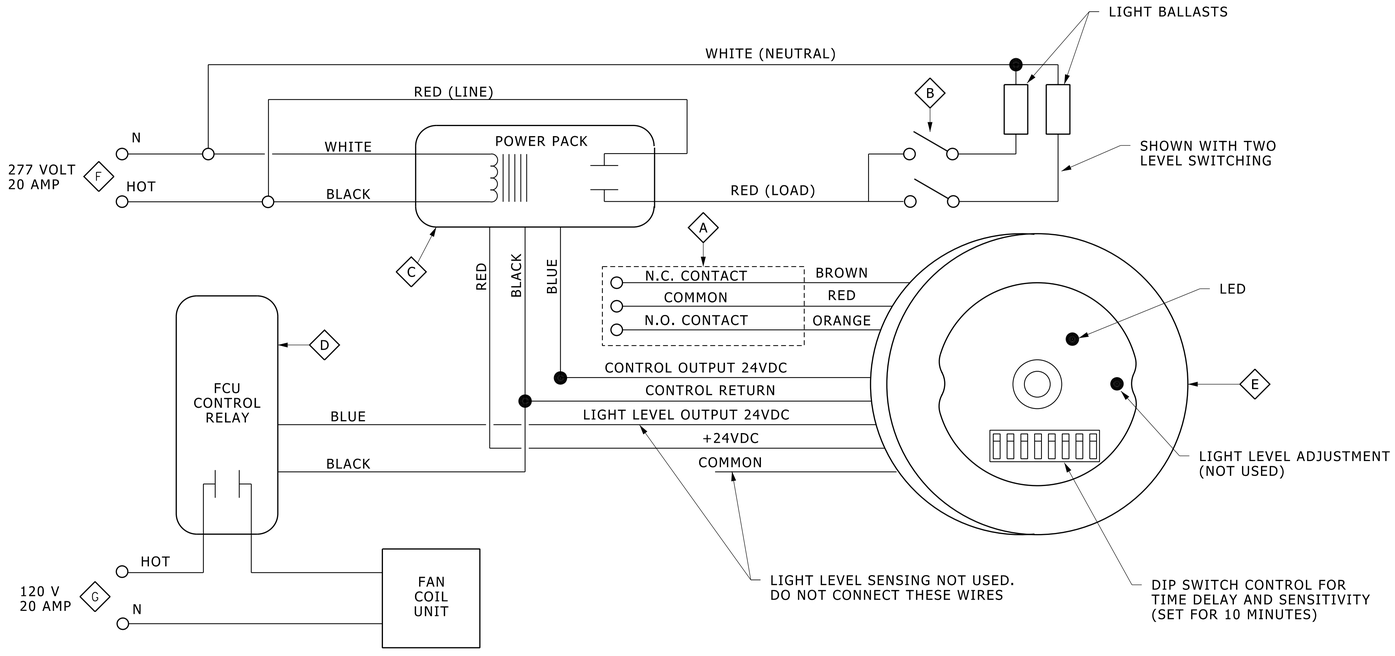

SENSOR SYSTEN - GENERAL NOTES:

1. ALL WIRING SHALL BE IN RACEWAYS.
2. USE TWO (OR MORE) JUNCTION BOXES, BOLTED TOGETHER AS NEEDED TO ACCOMMODATE WIRING OF DEVICES SO 277 VOLT, 120 VOLT AND 24 VOLT APPLICATIONS ARE NOT IN SAME BOX, OR RACEWAY. SUPPORT BOXES ABOVE CEILING, AT LOCATIONS OF SENSOR.
3. LIGHT SWITCHING WILL BE PLACED AT DOOR OF ROOM AND WILL ALLOW COMPLETE CONTROL OF LIGHTS WHEN ROOM IS OCCUPIED. PART OR ALL OF LIGHTING MAY BE TURNED OFF, OR BACK ON, AS NEEDED.
4. PROVIDE THREE-WAY SWITCHING IN NOTED ROOMS. IN SUCH ROOMS ONLY ONE "SENSOR SYSTEM" IS NEEDED. WIRE THREE-WAYS IN STANDARD FASHION.
5. NO OCCUPANCY SENSORS SHALL BE PLACED ON LIGHTING FOR CORRIDORS OR STAIRWAYS.
6. ALL SENSOR SYSTEM RELATED EQUIPMENTS SHALL BE FROM ONE MANUFACTURER.

SENSOR SYSTEM - REFERENCE NOTES:

A. USE THESE CONTACTS FOR CONTROL OF HVAC VIA TEMPERATURE CONTROL SYSTEM. COORDINATE WIRING EXTENSIONS WITH TC CONTRACTOR.

B. DIAGRAM SHOWS TWO LEVEL LIGHTING FOR (FIXTURES WITH 3 OR 4 LAMPS). FIXTURES WITH TWO LAMPS, OR AS NOTED OTHERWISE, WILL ONLY NEED AN LIGHT SWITCH.

C. USA A 277 TO 24 VOLT POWER SUPPLY HAVING A 277 VOLTS, 20 AMP RATED CONTROL CONTACT CAPABLE OF SWITCHING POWER FOR LIGHTS. USE WATTSTOPPER A277-E, OR A FUNCTIONALLY EQUIVALENT DEVICE THAT IS APPROVED FOR PURPOSE SHOWN.

D. USE A 24 VOLT CONTROL RELAY WITH A 24 VOLT COIL, AND A 120 VOLT, 20 AMP CONTACT. USE WATTSTOPPER S-277-E, OR FUNCTIONALLY EQUIVALENT DEVICE THAT IS APPROVED FOR PURPOSE SHOWN.

E. USE A 360° SENSITIVITY, PASSIVE INFRARED SENSOR, HAVING 24 VOLT CONTROLS, AND MOUNTABLE IN THE CEILING. PLACE SENSOR IN CENTER OF ROOM TO BEST SENSE MOVEMENT THROUGHOUT ROOM. SENSOR SHALL HAVE HOUSING AND TRIM TO RESULT IN A CLEAN FINISHED LOOK IN CEILING WHEN INSTALLED. PROVIDE SENSOR IN WHITE. USE WATTSTOPPER CI-200, OR EQUIVALENT TO COVER 1200 SQUARE FEET, FUNCTIONALLY EQUIVALENT DEVICE THAT IS APPROVED FOR PURPOSE SHOWN.

F. SEE LIGHTING PLAN FOR CIRCUIT NUMBER. PLEASE NOTE THAT ONE CIRCUIT SERVES MULTIPLE ROOMS.

G. SEE RECEPTACLE PANEL SCHEDULE FOR CIRCUIT NUMBERS. PLEASE NOTE THAT FAN COIL UNITS IN SEVERAL ROOMS MAY BE ON ONE CIRCUIT.

SCHEMATIC FOR OS F (LIGHTS, HVAC, FCU)

NO SCALE

26510011.dgn

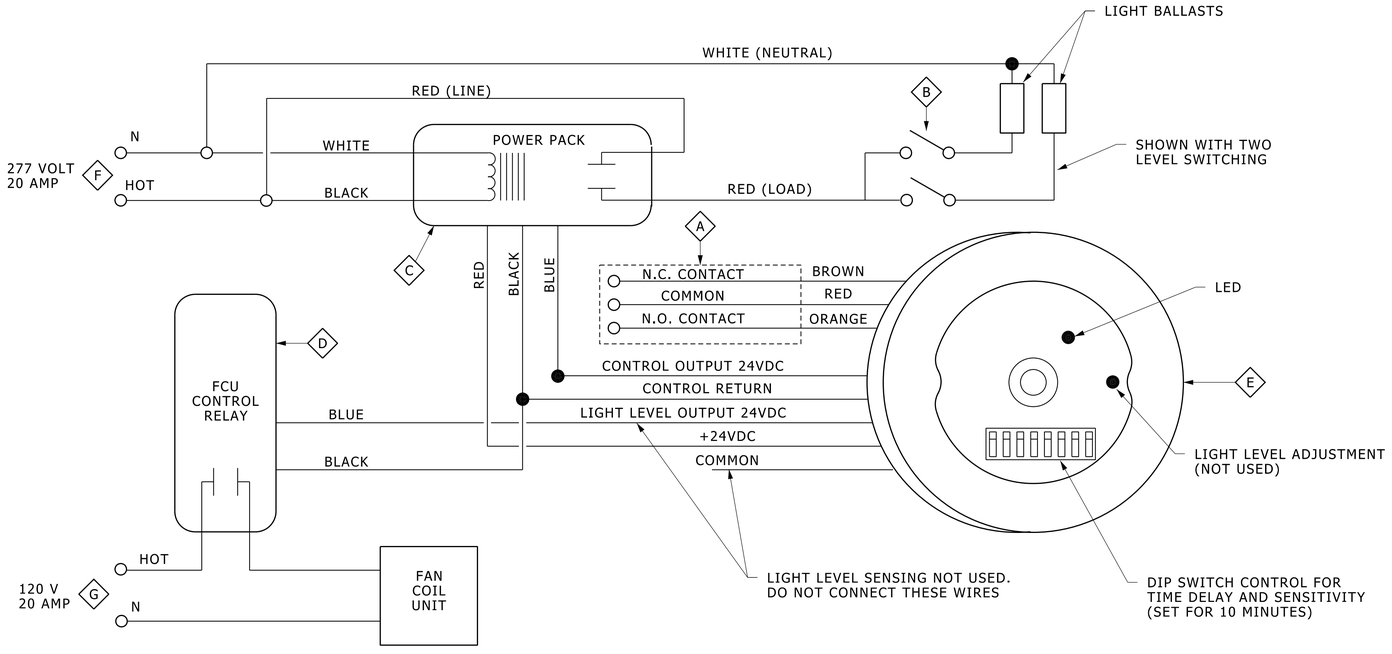

SENSOR SYSTEN - GENERAL NOTES:

1. ALL WIRING SHALL BE IN RACEWAYS.
2. USE TWO (OR MORE) JUNCTION BOXES, BOLTED TOGETHER AS NEEDED TO ACCOMMODATE WIRING OF DEVICES SO 277 VOLT, 120 VOLT AND 24 VOLT APPLICATIONS ARE NOT IN SAME BOX, OR RACEWAY. SUPPORT BOXES ABOVE CEILING, AT LOCATIONS OF SENSOR.
3. LIGHT SWITCHING WILL BE PLACED AT DOOR OF ROOM AND WILL ALLOW COMPLETE CONTROL OF LIGHTS WHEN ROOM IS OCCUPIED. PART OR ALL OF LIGHTING MAY BE TURNED OFF, OR BACK ON, AS NEEDED.
4. PROVIDE THREE-WAY SWITCHING IN NOTED ROOMS. IN SUCH ROOMS ONLY ONE "SENSOR SYSTEM" IS NEEDED. WIRE THREE-WAYS IN STANDARD FASHION.
5. NO OCCUPANCY SENSORS SHALL BE PLACED ON LIGHTING FOR CORRIDORS OR STAIRWAYS.
6. ALL SENSOR SYSTEM RELATED EQUIPMENTS SHALL BE FROM ONE MANUFACTURER.

SENSOR SYSTEM - REFERENCE NOTES:

A — USE THESE CONTACTS FOR CONTROL OF HVAC VIA TEMPERATURE CONTROL SYSTEM. COORDINATE WIRING EXTENSIONS WITH TC CONTRACTOR.

B — DIAGRAM SHOWS TWO LEVEL LIGHTING FOR (FIXTURES WITH 3 OR 4 LAMPS). FIXTURES WITH TWO LAMPS, OR AS NOTED OTHERWISE, WILL ONLY NEED AN LIGHT SWITCH.

C — USA A 277 TO 24 VOLT POWER SUPPLY HAVING A 277 VOLTS, 20 AMP RATED CONTROL CONTACT CAPABLE OF SWITCHING POWER FOR LIGHTS. USE WATTSTOPPER A277-E, OR A FUNCTIONALLY EQUIVALENT DEVICE THAT IS APPROVED FOR PURPOSE SHOWN.

D — USE A 24 VOLT CONTROL RELAY WITH A 24 VOLT COIL, AND A 120 VOLT, 20 AMP CONTACT. USE WATTSTOPPER S-277-E, OR FUNCTIONALLY EQUIVALENT DEVICE THAT IS APPROVED FOR PURPOSE SHOWN.

E — USE A DUAL TECHNOLOGY TYPE SENSOR UTILIZING PASSIVE INFARED SENSOR AND ULTRASONIC DETECTION. SENSOR SHALL TURN ON WHEN BOTH TECHNOLOGIES ARE SENSED, AND SHALL TURN OFF WHEN NEITHER TECHNOLOGY IS SENSED. SENSOR TO COVER AREAS OF UP TO 1500 SQUARE FEET AND MOUNTABLE ON WALL. MOUNT SENSOR ON "LONG" WALL OF ROOM, CENTERED ON WALL, APPROXIMATLY 6" BELOW CEILING. USE WATTSTOPPER DT-100L WITH CM 100 MOUNTING BRACKET, OR FUNCTIONALLY EQUIVALENT DEVICE THAT IS APPROVED FOR PURPOSE SHOWN.

F — SEE LIGHTING PLAN FOR CIRCUIT NUMBER. PLEASE NOTE THAT ONE CIRCUIT SERVES MULTIPLE ROOMS.

G — SEE RECEPTACLE PANEL SCHEDULE FOR CIRCUIT NUMBERS. PLEASE NOTE THAT FAN COIL UNITS IN SEVERAL ROOMS MAY BE ON ONE CIRCUIT.

SCHEMATIC FOR OS S (LIGHTS, HVAC, FCU, DUAL TECH)

NO SCALE

26510012.001

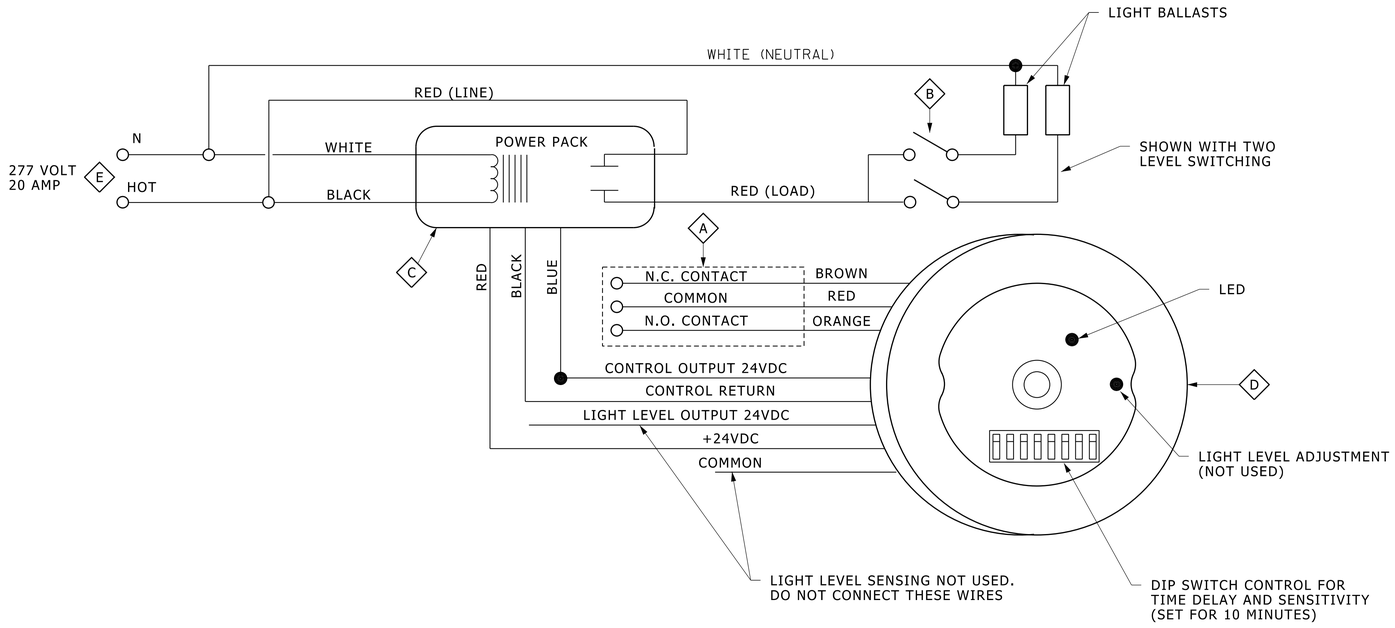

SENSOR SYSTEN - GENERAL NOTES:

1. ALL WIRING SHALL BE IN RACEWAYS.
2. USE TWO (OR MORE) JUNCTION BOXES, BOLTED TOGETHER AS NEEDED TO ACCOMMODATE WIRING OF DEVICES SO 277 VOLT, 120 VOLT AND 24 VOLT APPLICATIONS ARE NOT IN SAME BOX, OR RACEWAY. SUPPORT BOXES ABOVE CEILING, AT LOCATIONS OF SENSOR.
3. LIGHT SWITCHING WILL BE PLACED AT DOOR OF ROOM AND WILL ALLOW COMPLETE CONTROL OF LIGHTS WHEN ROOM IS OCCUPIED. PART OR ALL OF LIGHTING MAY BE TURNED OFF, OR BACK ON, AS NEEDED.
4. PROVIDE THREE-WAY SWITCHING IN NOTED ROOMS. IN SUCH ROOMS ONLY ONE "SENSOR SYSTEM" IS NEEDED. WIRE THREE-WAYS IN STANDARD FASHION.
5. NO OCCUPANCY SENSORS SHALL BE PLACED ON LIGHTING FOR CORRIDORS OR STAIRWAYS.
6. ALL SENSOR SYSTEM RELATED EQUIPMENTS SHALL BE FROM ONE MANUFACTURER.

SENSOR SYSTEM - REFERENCE NOTES:

A. USE THESE CONTACTS FOR CONTROL OF HVAC VIA TEMPERATURE CONTROL SYSTEM. COORDINATE WIRING EXTENSIONS WITH TC CONTRACTOR.

B. DIAGRAM SHOWS TWO LEVEL LIGHTING FOR (FIXTURES WITH 3 OR 4 LAMPS). FIXTURES WITH TWO LAMPS, OR AS NOTED OTHERWISE, WILL ONLY NEED AN LIGHT SWITCH.

C. USA A 277 TO 24 VOLT POWER SUPPLY HAVING A 277 VOLTS, 20 AMP RATED CONTROL CONTACT CAPABLE OF SWITCHING POWER FOR LIGHTS. USE WATTSTOPPER A277-E, OR A FUNCTIONALLY EQUIVALENT DEVICE THAT IS APPROVED FOR PURPOSE SHOWN.

D. USE A 360° SENSITIVITY, PASSIVE INFRARED SENSOR, HAVING 24 VOLT CONTROLS, AND MOUNTABLE IN THE CEILING. PLACE SENSOR IN CENTER OF ROOM TO BEST SENSE MOVEMENT THROUGHOUT ROOM. SENSOR SHALL HAVE HOUSING AND TRIM TO RESULT IN A CLEAN FINISHED LOOK IN CEILING WHEN INSTALLED. PROVIDE SENSOR IN WHITE. USE WATTSTOPPER CI-200, OR EQUIVALENT TO COVER 1200 SQUARE FEET, FUNCTIONALLY EQUIVALENT DEVICE THAT IS APPROVED FOR PURPOSE SHOWN.

E. SEE LIGHTING PLAN FOR CIRCUIT NUMBER. PLEASE NOTE THAT ONE CIRCUIT SERVES MULTIPLE ROOMS.

SCHEMATIC FOR OS (LIGHTS, HVAC)

NO SCALE

26510013.dgn

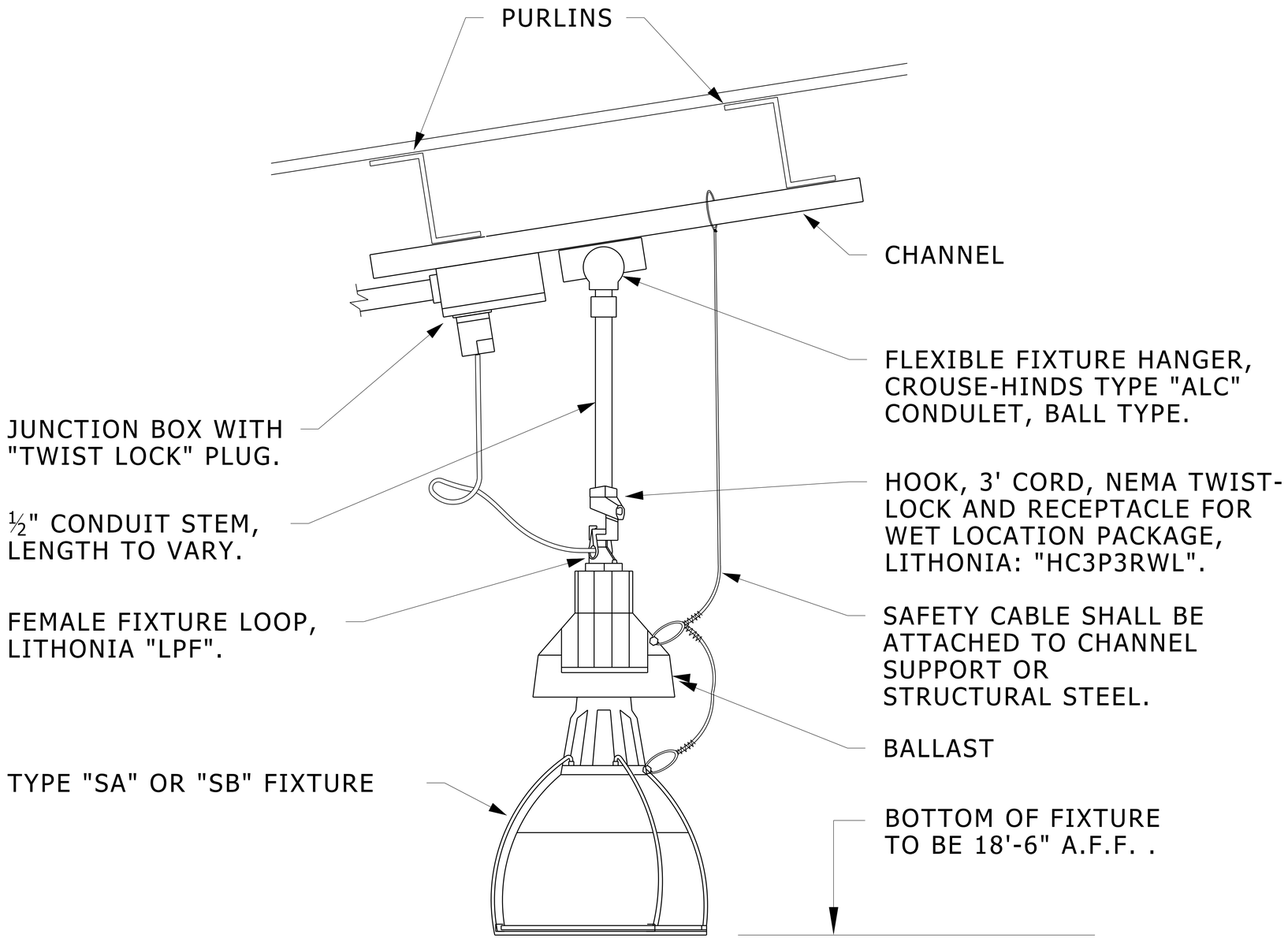

HIGH BAY FIXTURE MOUNTING

N.T.S.

26510014.dgn

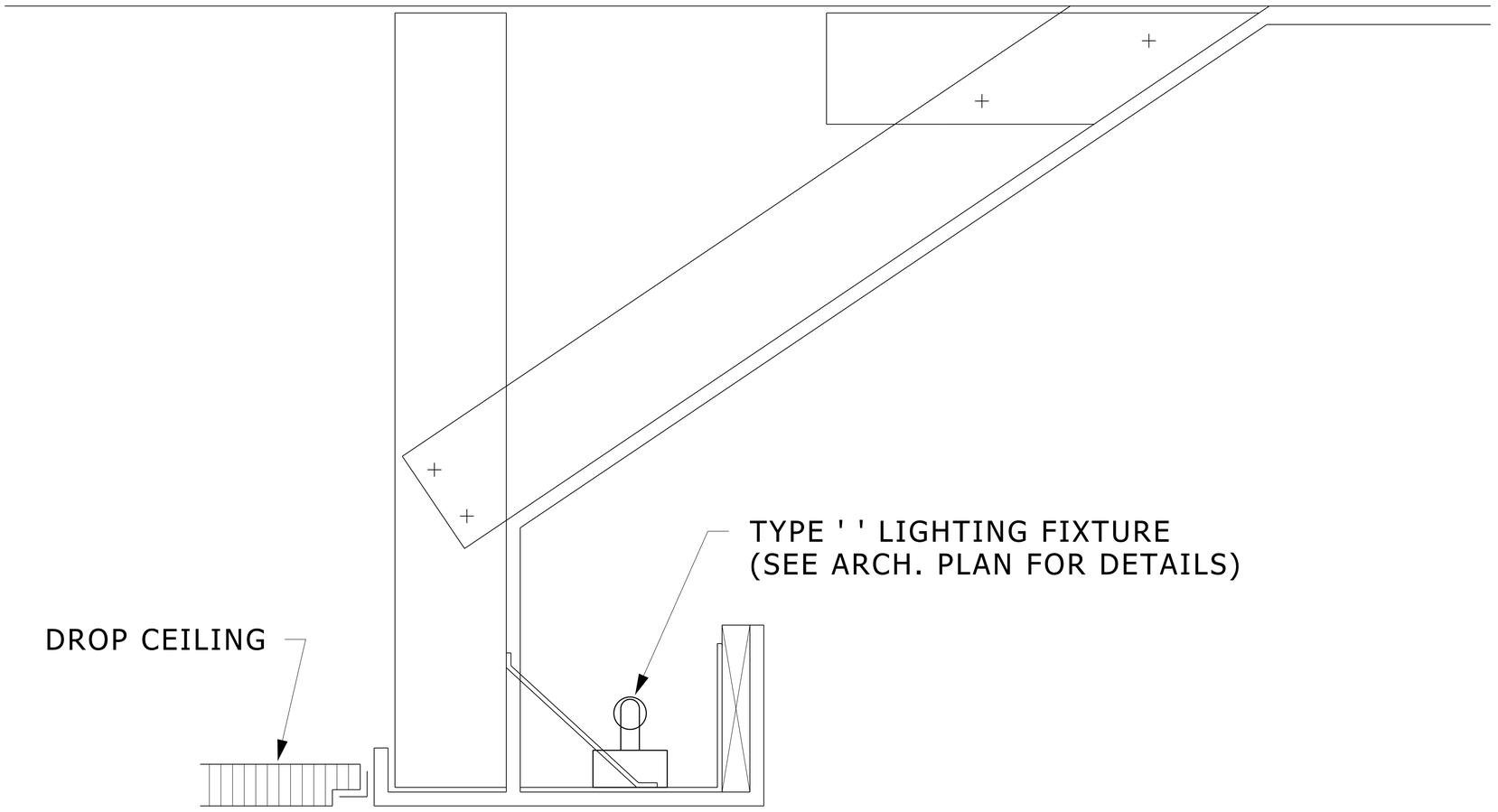

"COVE" LIGHT MOUNTING DETAIL

NO SCALE

26510015.dgn

SPECIAL NOTE:

THE UNIVERSITY IS TRANSITIONING FROM METAL HALIDE TO LED FIXTURES. USE THIS SCHEDULE ONLY WHEN ADDING A FEW FIXTURES TO AN EXISTING METAL HALIDE INSTALLATION. OTHERWISW, USE LED FIXTURES PER DETAIL 26560026.

GENERAL NOTES:

1. THE CONTRACTOR SHALL PROVIDE THE PEDESTRIAN LIGHTING FIXTURES, POLES, LAMPS AND STANDARD ANCHOR BOLTS.
2. THE ANCHOR BOLTS SHALL BE ¾" X 20" X 3" ELL, HOT DIPPED FULL GALVANIZED STEEL. EACH ANCHOR BOLT SHALL INCLUDE 2 FLAT WASHERS AND 2 HEX NUTS.
3. WHEN POLES ARE LOCATED ON WALLS, IN PLANTERS OR ON OTHER ARCHITECTURAL FEATURES, ORDER SPECIAL HEIGHT POLES SO THAT THE FIXTURES' LUMINOUS CENTER (BAND OF GLOBE) IS AT THE SAME HEIGHT AS THOSE OF SURROUNDING FIXTURES.
4. PROVIDE A THIRD (SPARE) 1 1/4" CONDUIT STUBBED OUT 3' FROM BASE AT FIXTURES INDICATED BY "STUB SPARE C." ON PLAN DRAWINGS FOR FUTURE EXTENSION OF THE LIGHTING CIRCUIT.
5. LOCATE BASES ON CENTER LINES WHERE CENTER LINES ARE SHOWN ON PLANS, OR CENTER BASES 30" BACK FROM THE CURB OR SIDEWALK WHERE CENTER LINES ARE NOT SHOWN.
6. ROUTE UNDERGROUND CONDUITS AS CLOSE TO CURBS AND SIDEWALKS AS POSSIBLE TO AVOID INTERFERENCES WITH FUTURE LANDSCAPING.
7. CONTRACTOR SHALL STAKE ALL SITE LIGHTING FIXTURES AND RECEIVE APPROVAL FROM ARCHITECTURE & ENGINEERING (764-3414) BEFORE INSTALLING ANY LIGHT BASES.

PEDESTRIAN LIGHTING LEGEND	
●	SINGLE GLOBE UNIT
●●	DOUBLE GLOBE UNIT
⁘	MULTIPLE GLOBE UNIT
– – – – –	UNDERGROUND ELECTRIC CIRCUIT
═══	6" SLEEVE
E	EXISTING

PEDESTRIAN LIGHTING FIXTURE SCHEDULE				
FIXTURE TYPE	DESCRIPTION FOR LUMEC FIXTURES	NO. OF GLOBES	QUARTZ RESTRIKE	QUANTITY
MEA1	SINGLE 100W MH FIXTURE MOUNTED ON TAPERED POLE, 11'-8" TO LUMINOUS CENTER (BAND OF GLOBE) NW209-100WMH-ACDR-CPD-DF5-EL-002/ 277-VSPA-001-10.83-RTBC1-3/4"X20- G9 1/2"-DEC-BKTX-LCP52873.	1	NO	
MEA2A	FIVE 50W MH FIXTURES MOUNTED ON TAPERED POLE, 12'-0" TO LUMINOUS CENTER(BAND OF FOUR LOWER GLOBES) NW209-50WMH-ACDR-CPD-DF5-QTA/ 277-CR5-VSPA-XX-12'-0" LIGHT CENTER-RTBC1-1X33-G9 1/2"- DEC-BKTX-LMS20363A	5	NO	
MEA2B	FIVE 50W MH FIXTURES MOUNTED ON TAPERED POLE, 13'-2" TO LUMINOUS CENTER(BAND OF FOUR LOWER GLOBES) NW209-50WMH-ACDR-CPD-DF5-QTA/ 277-CR5-VSPA-XX-13'-2" LIGHT CENTER-RTBC1-1X33-G9 1/2"- DEC-BKTX-LMS20363A	5	NO	
MEA3	TWIN 70W MH FIXTURES MOUNTED ON TAPERED POLE, 11'-8" TO LUMINOUS CENTER(BAND OF GLOBES) NW209-70WMH-ACDR-CPD-DF5-QTA/ 277-CR2-VSPA-XX-11'-8" LIGHT CENTER-RTBC1-1X33-G9 1/2"- DEC-BKTX-LMS20363A	2	NO	
MEA3S	TWIN 70W MH FIXTURES MOUNTED ON TAPERED POLE, 11'-0" TO LUMINOUS CENTER(BAND OF GLOBES) NW209-70WMH-ACDR-CPD-DF5-QTA/ 277-CR2-VSPA-XX-11'-0" LIGHT CENTER-RTBC1-1X33-G9 1/2"- DEC-BKTX-LMS20363A	2	NO	
MEA4	TWIN 70W MH FIXTURES MOUNTED ON TAPERED POLE, 10'-6" TO LUMINOUS CENTER(BAND OF GLOBES) NW209-70WMH-ACDR-CPD-DF5-QTA/ 277-CR2-VSPA-XX-10'-6" LIGHT CENTER-RTBC1-1X33-G9 1/2"- DEC-BKTX-LMS20363A	2	NO	
MEA5	SINGLE 100W MH FIXTURE MOUNTED ON TAPERED POLE, 10'-6" TO LUMINOUS CENTER(BAND OF GLOBE) NW209-100WMH-ACDR-CPD-DF5-QTA/ 277-1-VSPA-XX-10'-6" LIGHT CENTER-RTBC1-1X33-G9 1/2"- DEC-BKTX-LMS20363A	1	NO	
MEA6	SINGLE 100W MH FIXTURE MOUNTED ON TAPERED POLE, 11'-8" TO LUMINOUS CENTER(BAND OF GLOB) NW209-100WMH-ACDR-CPD-DF5-QTA/ 277-1-QRS-1-VSPA-10'-10"-RTBC1-1X33"- G9 1/2"-DEC-BKTX-LMS20363A.	1	YES	
MEA7A	FIVE 50W MH FIXTURES MOUNTED ON TAPERED POLE, 12'-0" TO LUMINOUS CENTER(BAND OF FOUR LOWER GLOBES) NW209-50WMH-ACDR-CPD-DF5-QTA/ 277-CR5-VSPA-XX-12'-0" LIGHT CENTER-RTBC1-1X33-G9 1/2"- DEC-BKTX-LMS20363A	5	YES	
MEA7B	FIVE 50W MH FIXTURES MOUNTED ON TAPERED POLE, 13'-2" TO LUMINOUS CENTER(BAND OF FOUR LOWER GLOBES) NW209-50WMH-ACDR-CPD-DF5-QTA/ 277-CR5-VSPA-XX-13'-2" LIGHT CENTER-RTBC1-1X33-G9 1/2"- DEC-BKTX-LMS20363A	5	YES	
MEA7S	FIVE 50W MH FIXTURES MOUNTED ON TAPERED POLE, 9'-6" TO LUMINOUS CENTER(BAND OF FOUR LOWER GLOBES) NW209-50WMH-ACDR-CPD-DF5-QTA/ 277-CR5-VSPA-XX-9'-6" LIGHT CENTER-RTBC1-1X33-G9 1/2"- DEC-BKTX-LMS20363A	5	YES	
MEA8	TWIN 70W MH FIXTURES MOUNTED ON TAPERED POLE, 11'-8" TO LUMINOUS CENTER(BAND OF GLOBES) NW209-70WMH-ACDR-CPD-DF5-QTA/277- CR2-VSPA-10'-10"-RTBC1-1X33-G9 1/2"- DEC-BKTX-LMS20363A	2	YES	
MEA9	SINGLE 100W MH FIXTURE MOUNTED ON TAPERED POLE, 10'-6" TO LUMINOUS CENTER(BAND OF GLOBE) NW209-100WMH-ACDR-CPD-DF5-QTA/ 277-1-VSPA-XX-10'-6"- LIGHT CENTER-RTBC1-1X33-G9 1/2"- DEC-BKTX-LMS20363A	1	YES	
MEA10	FIVE 50W MH FIXTURES MOUNTED ON TAPERED POLE, 14'-4" TO LUMINOUS CENTER(BAND OF FOUR LOWER GLOBES) NW209-50WMH-ACDR-CPD-DF5-QTA/ 277-CR5-VSPA-XX-14'-4" LIGHT CENTER-RTBC1-1X33-G9 1/2"- DEC-BKTX-LMS20363A	5	NO	

METAL HALIDE
TYPICAL PEDISTRIAN GLOBE FIXTURE SCHEDULE

NO SCALE

26560001.dgn

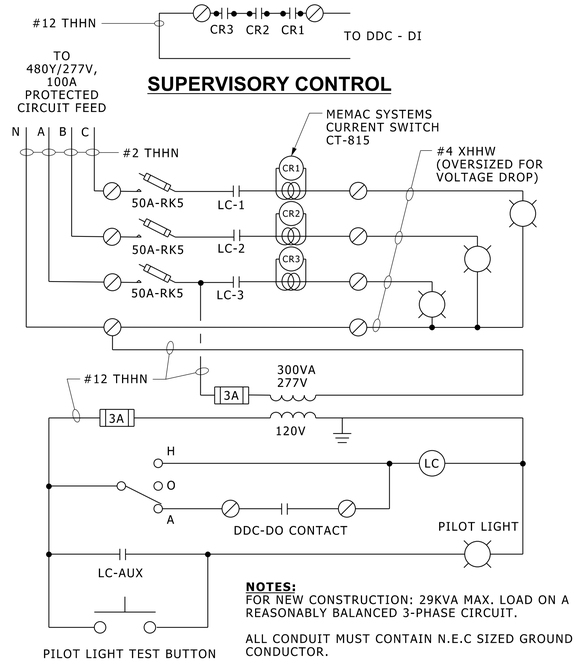

SUPERVISORY CONTROL

CONTROL WIRING FOR CONTACTOR

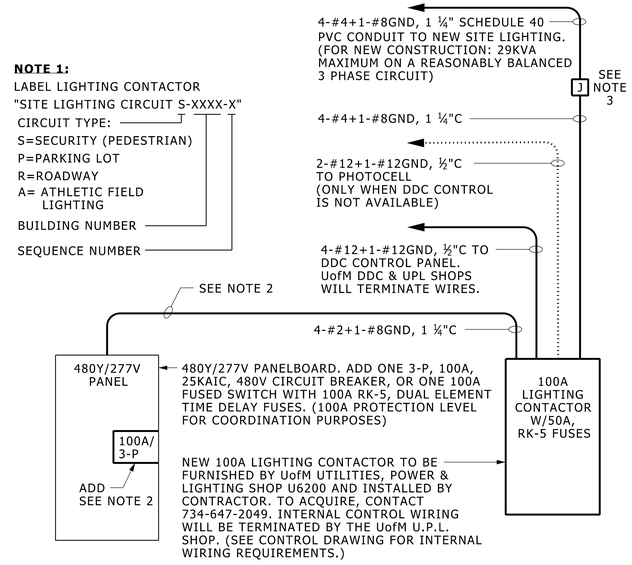

NOTE 1:
LABEL LIGHTING CONTACTOR
"SITE LIGHTING CIRCUIT S-XXXX-X"
CIRCUIT TYPE:
S=SECURITY (PEDESTRIAN)
P=PARKING LOT
R=ROADWAY
A= ATHLETIC FIELD LIGHTING
BUILDING NUMBER
SEQUENCE NUMBER

NOTE 2:
IF AVAILABLE POWER IS 208Y/120V, FEED LIGHTING CONTACTOR WITH 150A, 3-P CIRCUIT BREAKER, OR ONE 200A FUSED SWITCH WITH 150A, RK-5, DUAL ELEMENT TIME DELAY FUSES, THROUGH 208V-480Y/277V, 45KVA, COPPER WOUND, 150°C TEMPERATURE RISE, STEP-UP TRANSFORMER, SQ-D #45T64H. WIRE TO BE 3-#1/0+1-#6GND, 2"C.

NOTE 3:
PROVIDE JUNCTION BOX ON INSIDE OF EXTERIOR WALL FOR TRANSITION FROM TYPE THHN CABLES TO TYPE XHHW CABLES OUTSIDE.

TYPICAL RISER FOR SITE LIGHTING POWER SOURCE

NO SCALE

26560002.DGN

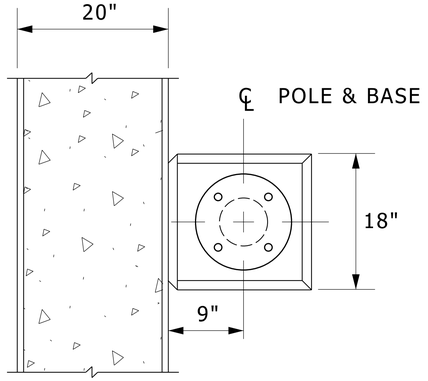

BASE PLAN VIEW

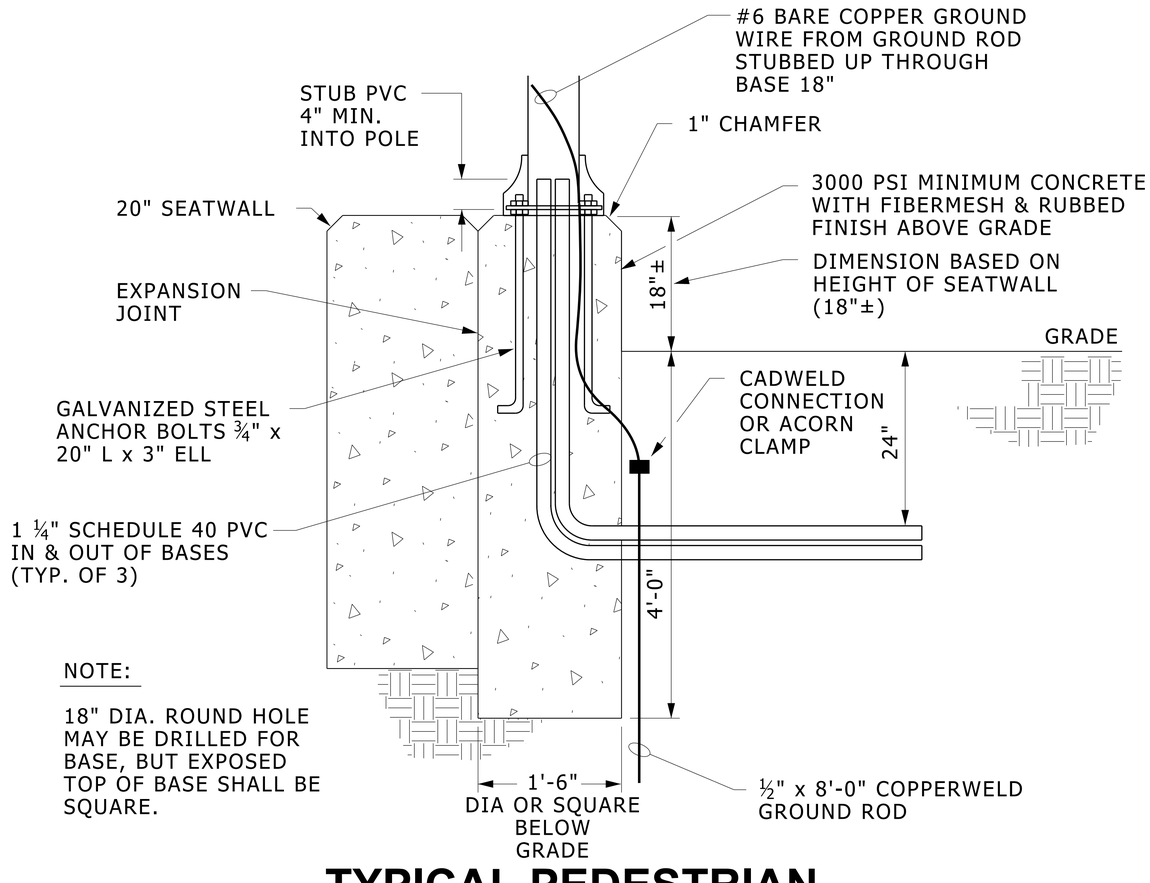

TYPICAL PEDESTRIAN LIGHT POLE BASE AGAINST A SEATWALL

NO SCALE

26560003.dgn

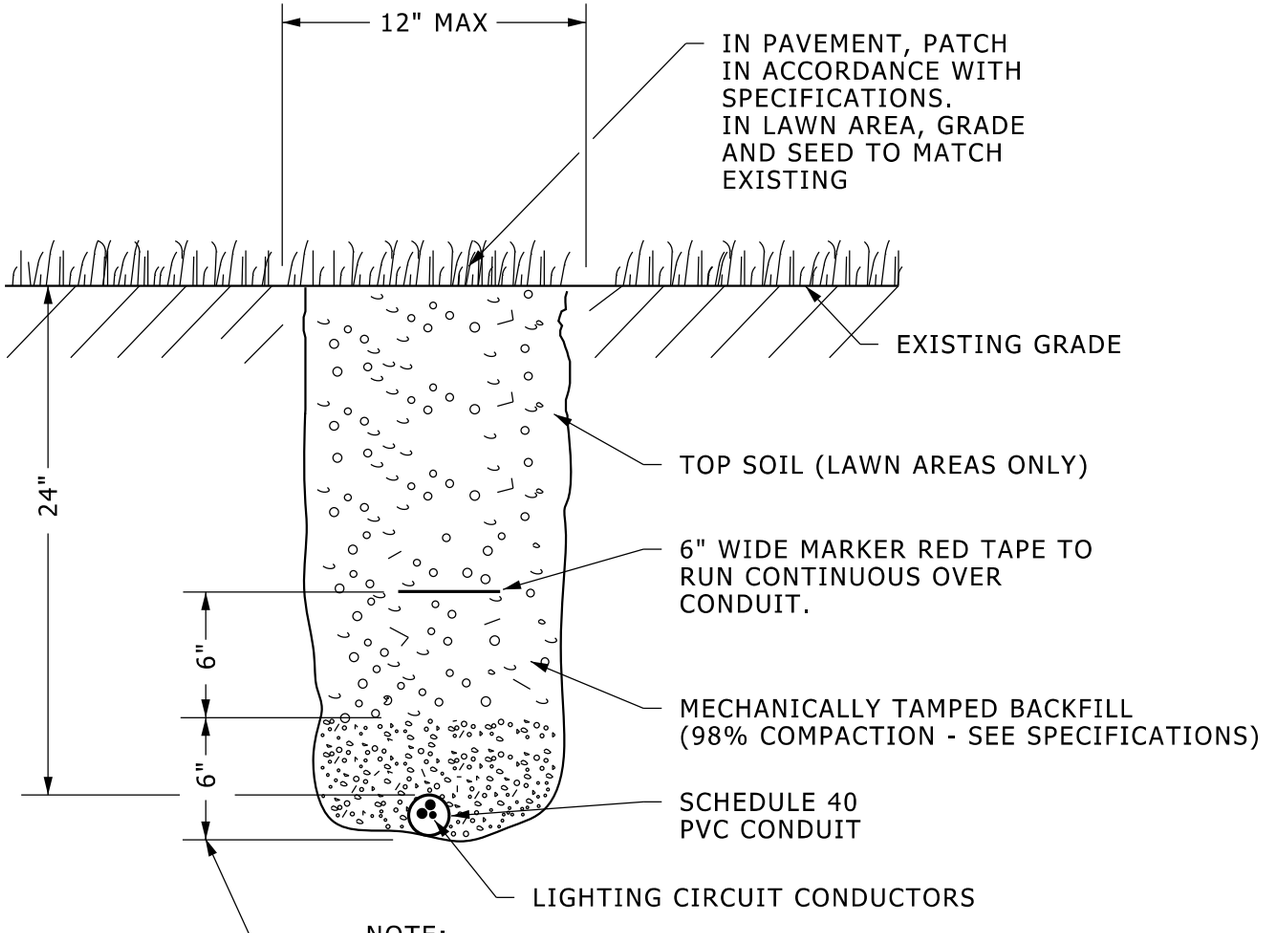

NOTE:
WHERE MORE THAN ONE CONDUIT IS INSTALLED IN THE TRENCH, PROVIDE THE PROPER MARKER TAPE OVER EACH CONDUIT.

TYPICAL SITE LIGHTING TRENCH DETAIL

NO SCALE

26560004.dgn

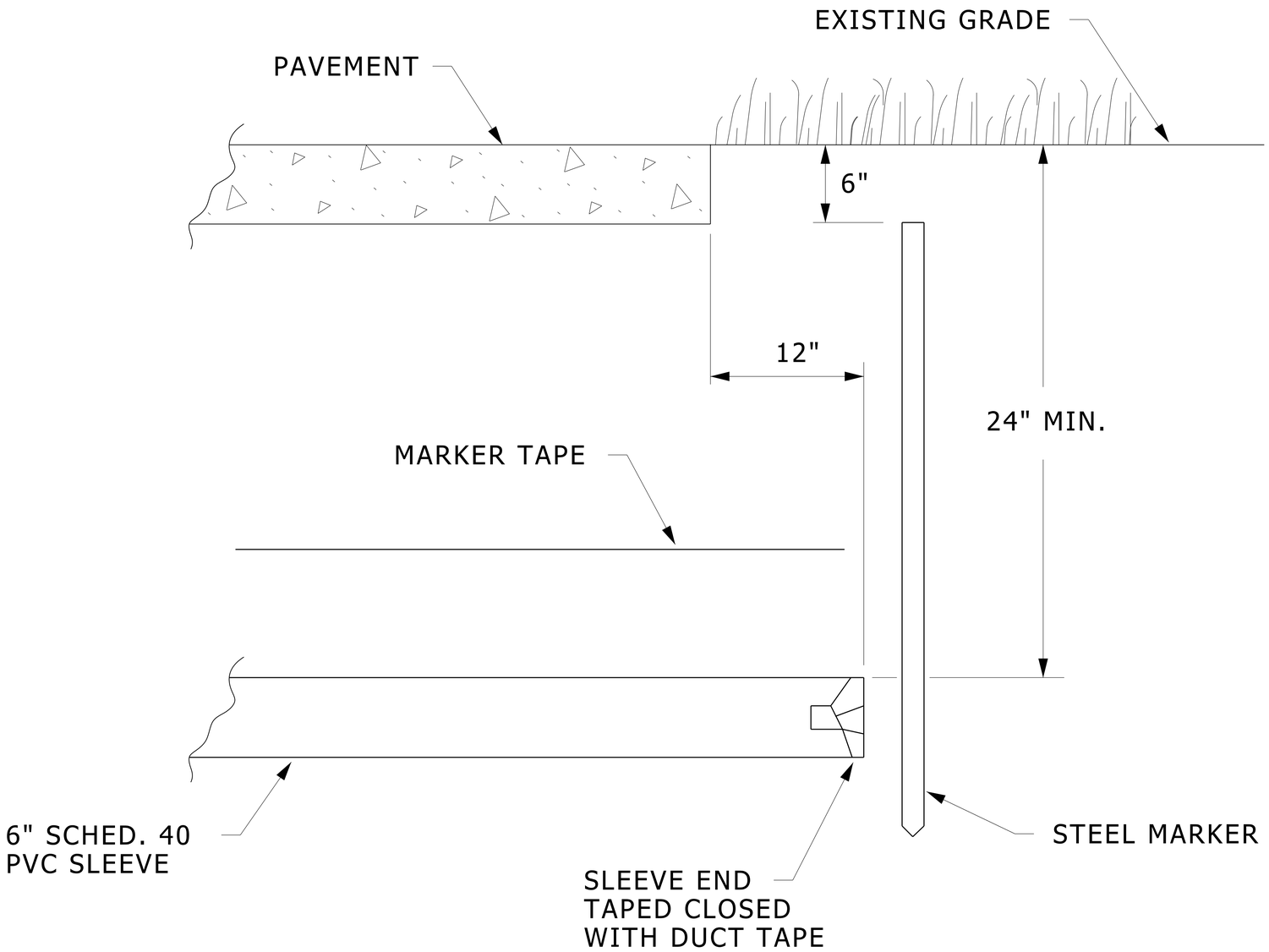

TYPICAL UNDERGROUND SLEEVE DETAIL

NO SCALE

26560005.dgn

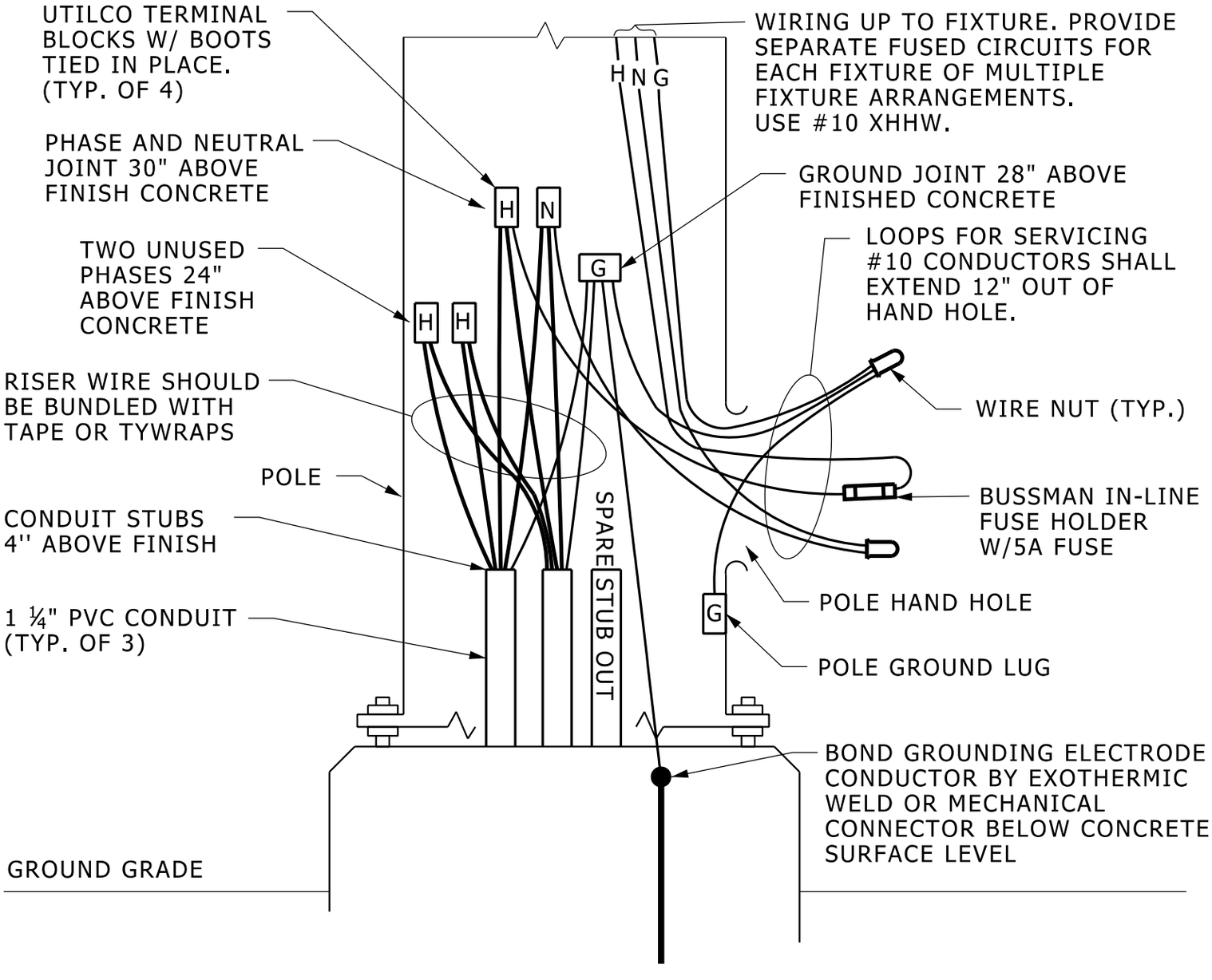

TYPICAL POLE WIRING DETAIL

NO SCALE

26560006.DGN

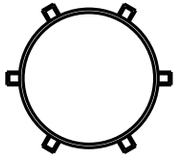

PLAN VIEW

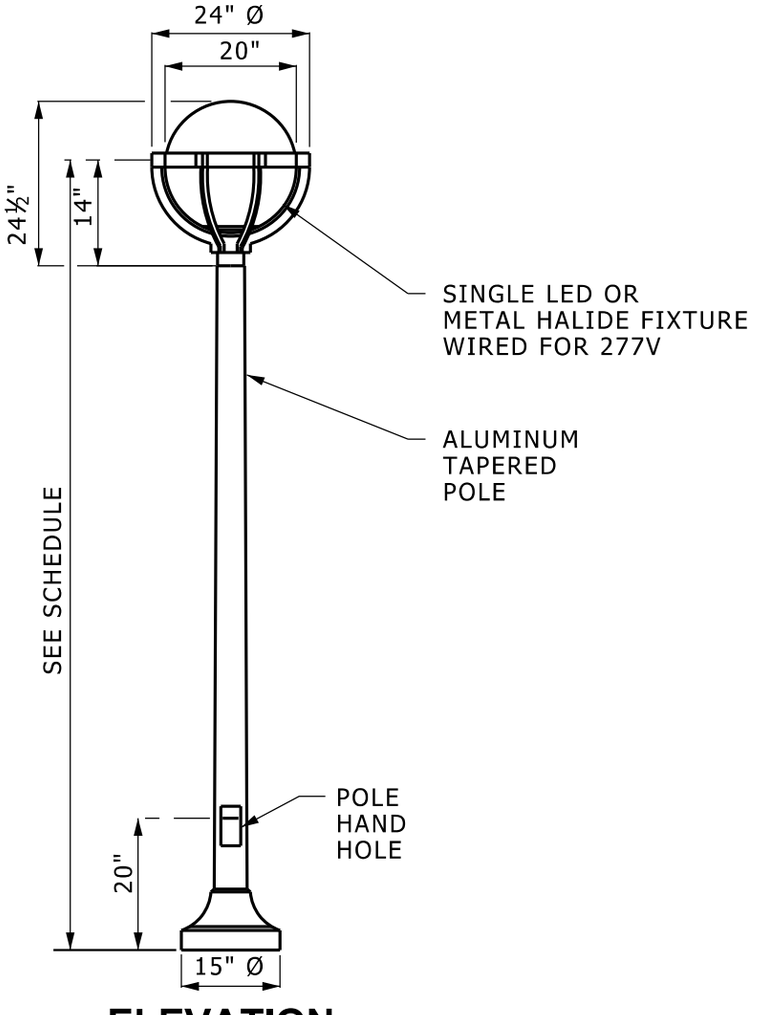

ELEVATION

SINGLE GLOBE UNIT

NO SCALE

26560007.dgn

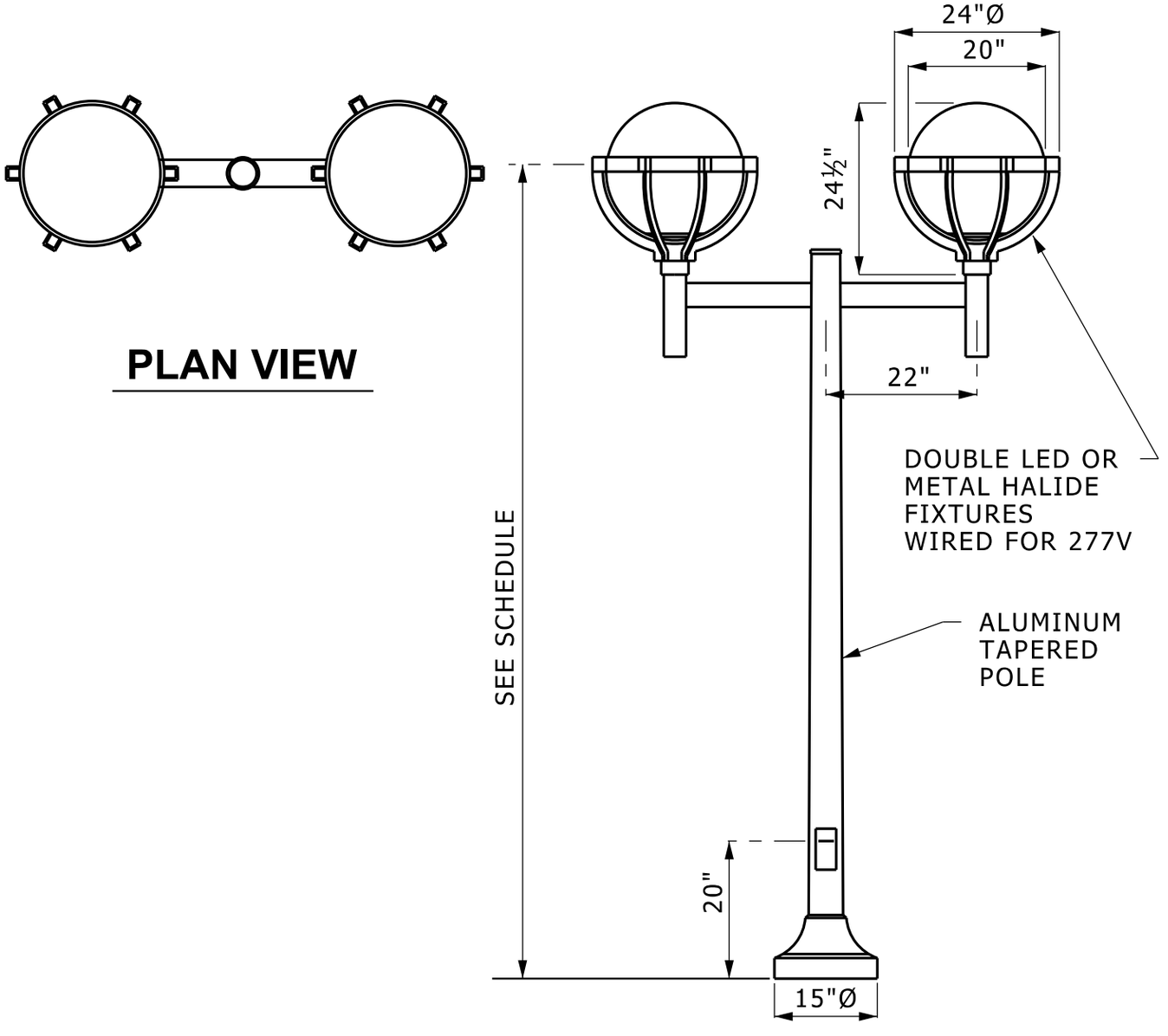

PLAN VIEW

ELEVATION

DOUBLE GLOBE UNIT

NO SCALE

26560008.dgn

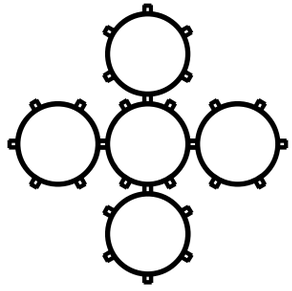

PLAN VIEW

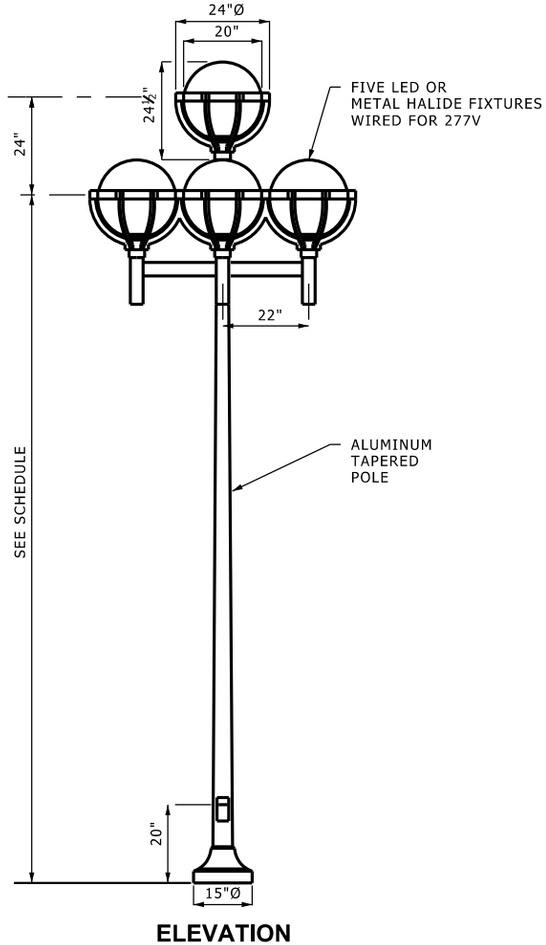

ELEVATION

FIVE GLOBE UNIT

NO SCALE

26560009.dgn

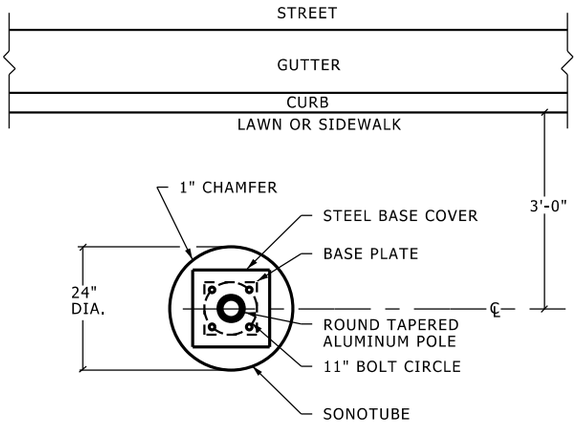

NOTE:

ALL LOCATIONS AND DIMENSIONS FOR ANCHOR BOLTS ETC. SHALL BE VERIFIED IN FIELD BY THE INSTALLING CONTRACTOR WITH BOLTS FURNISHED BY POLE MANUFACTURER.

BASE - PLAN VIEW

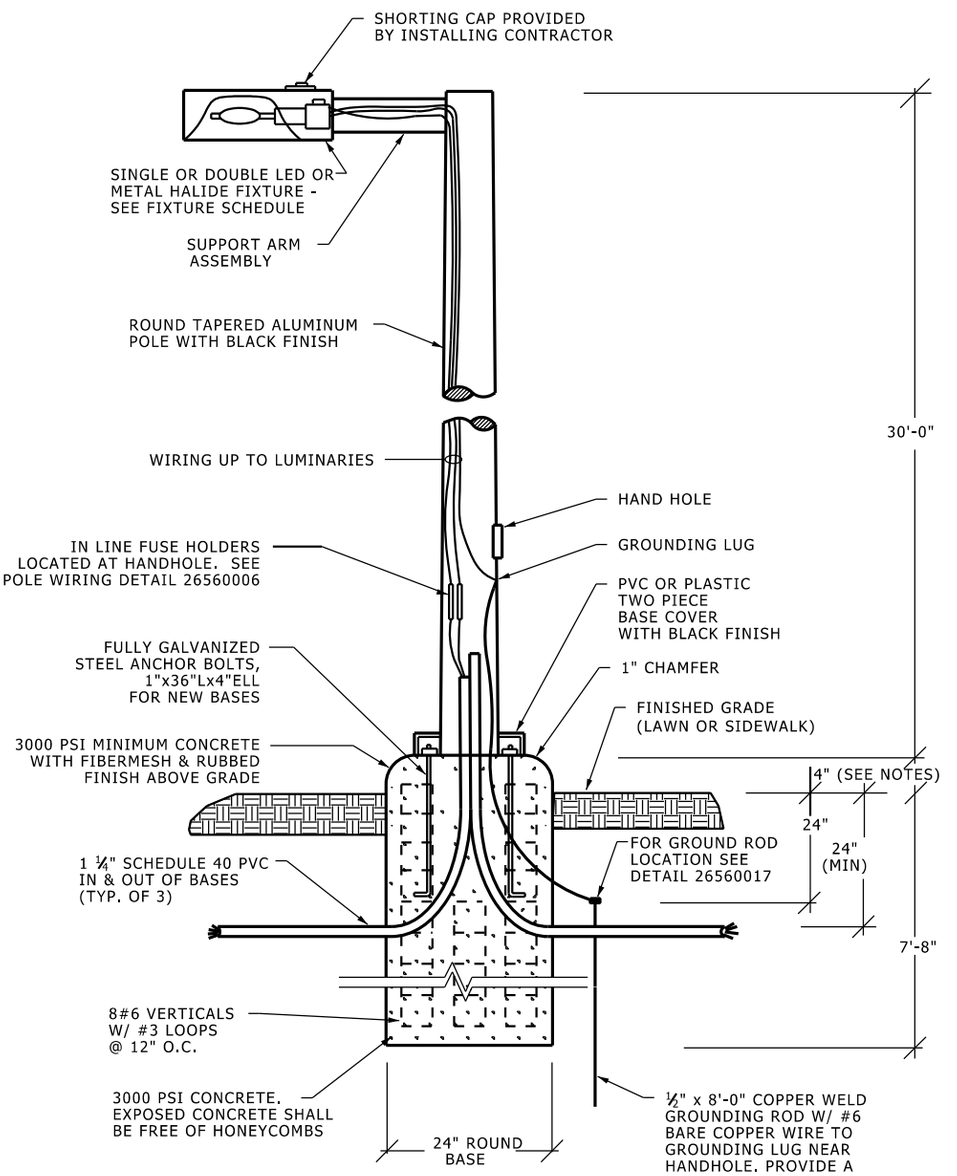

NOTES:

1. WHEN THE FINISHED GRADE SLOPES DOWNWARD FROM THE CURB, ADJUST THE EXPOSED HEIGHT OF THE BASE SO THAT THE TOP OF THE BASE IS 4" ABOVE THE TOP OF THE CURB.
2. WHEN THE FINISHED GRADE SLOPES UPWARD FROM THE CURB, ADJUST THE EXPOSED HEIGHT OF THE BASE SO THAT THE TOP OF THE BASE IS 2" ABOVE THE FINISHED GRADE AT THE BACK SIDE OF THE BASE.
3. LOCATE BASES ON CENTERLINES WHERE CENTERLINES ARE SHOWN ON THE PLANS, OR CENTER BASES 3'-0" BACK FROM THE CURB WHERE CENTERLINES ARE NOT SHOWN.

TYPICAL STREET LIGHT FIXTURE DETAIL

NO SCALE

26560010.dgn

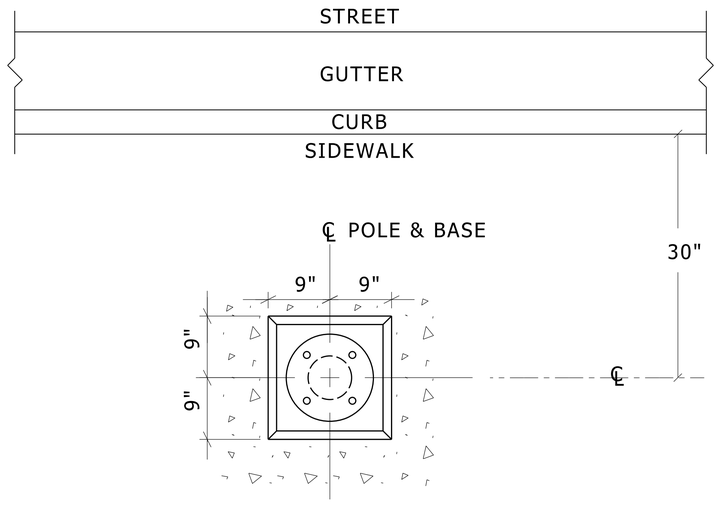

BASE PLAN VIEW

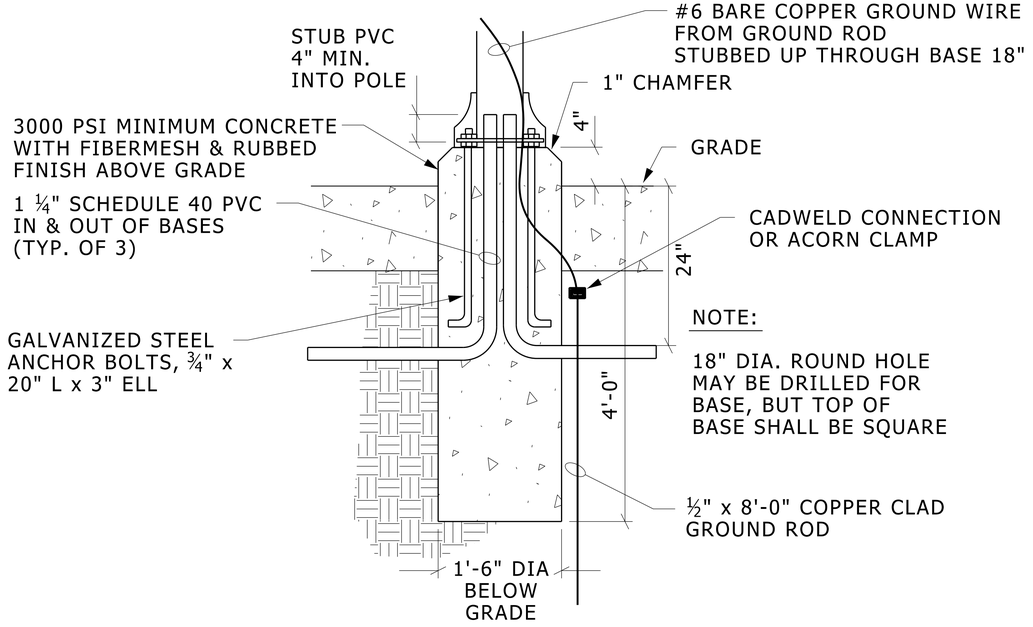

TYPICAL PEDESTRIAN LIGHT POLE BASE IN PAVEMENT

NO SCALE

26560011.dgn

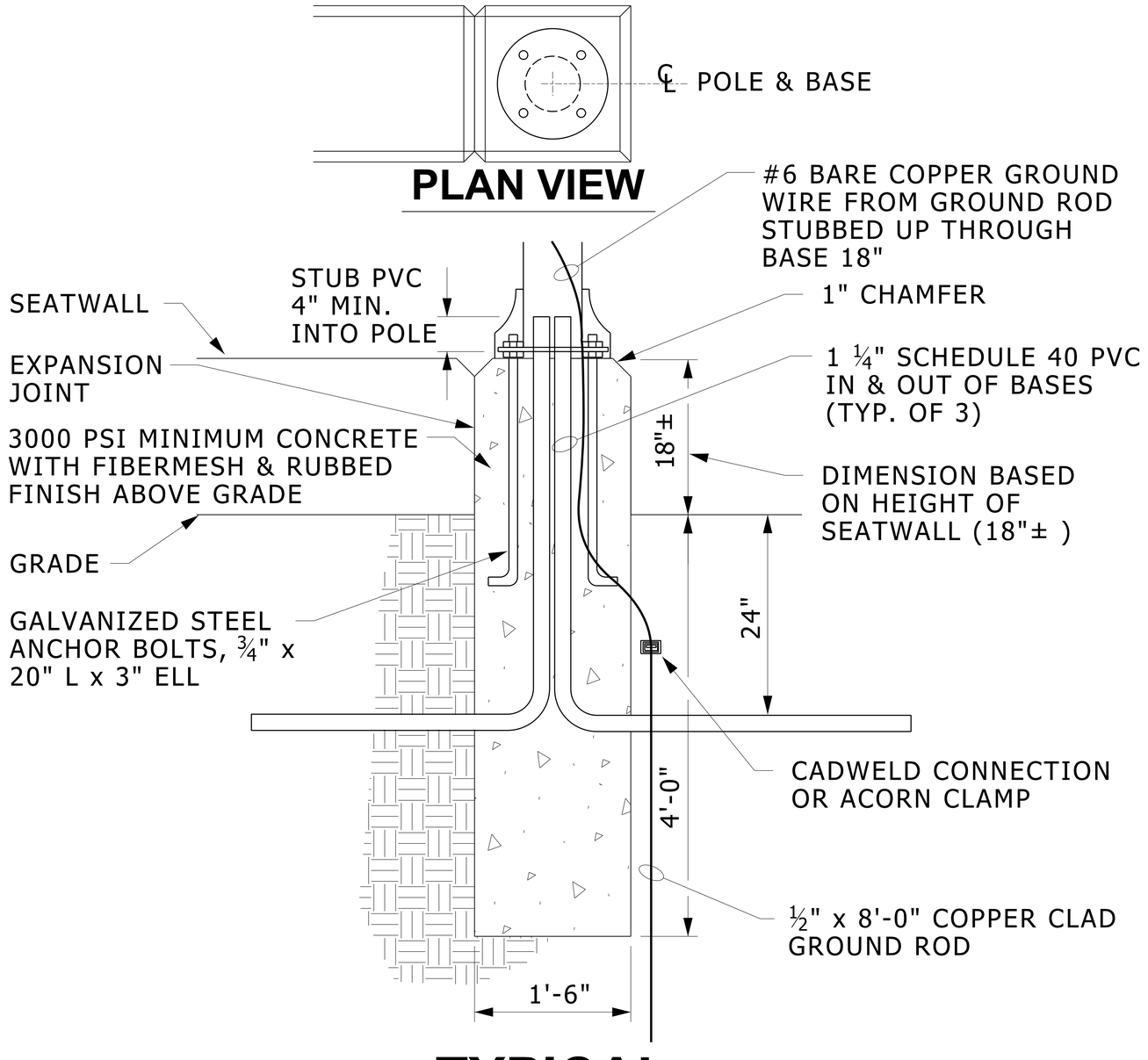

TYPICAL
PEDESTRIAN LIGHT POLE BASE IN A SEATWALL

NO SCALE

26560012.dgn

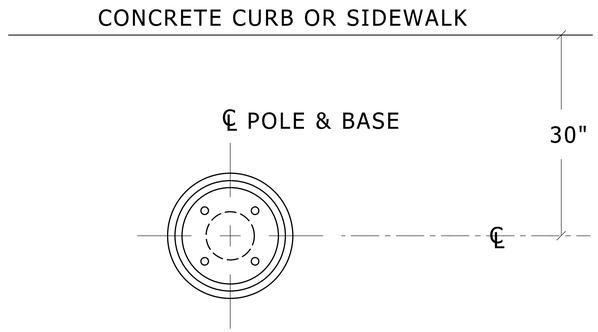

BASE PLAN VIEW

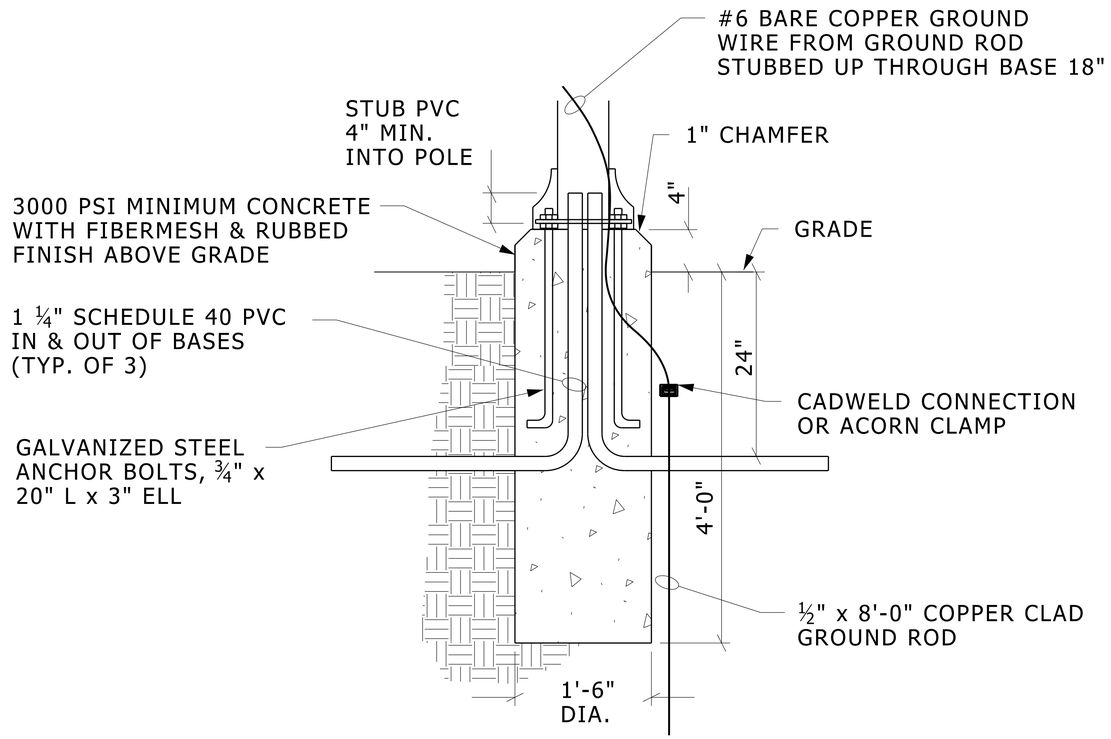

TYPICAL PEDESTRIAN LIGHT POLE BASE IN LAWN

NO SCALE

26560013.dgn

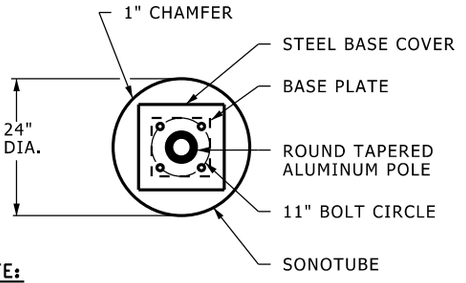

NOTE:
ALL LOCATIONS AND DIMENSIONS FOR ANCHOR BOLTS ETC. SHALL BE VERIFIED IN FIELD BY INSTALLING CONTRACTOR WITH BOLTS AS FURNISHED BY POLE MANUFACTURER.

PLAN VIEW - BASE

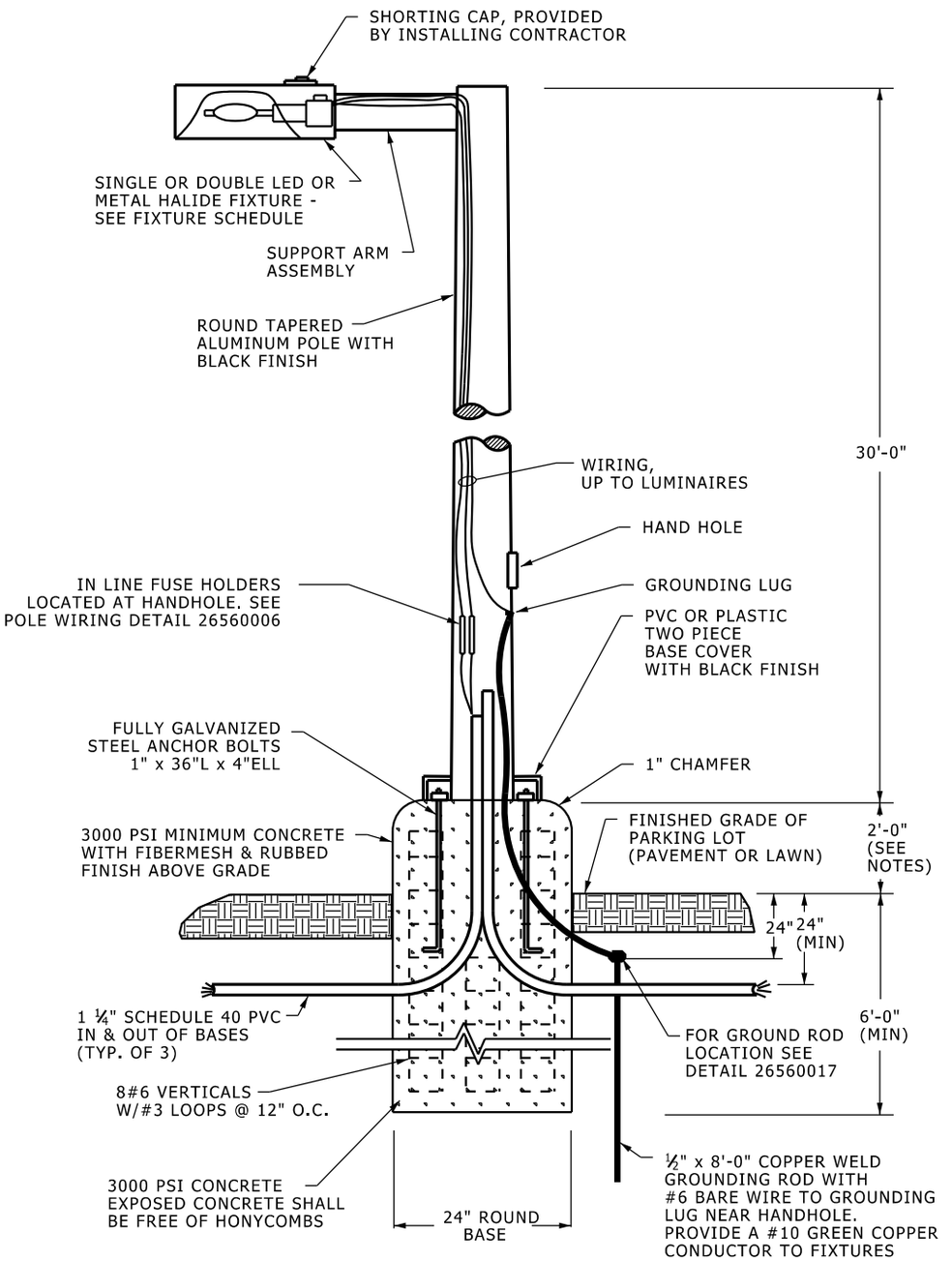

NOTES:
1. WHEN INSTALLING PARKING LOT LIGHTING IN LAWN AREAS AROUND THE PARKING LOT OR IN ISLANDS OR BERMS INSIDE THE PARKING LOT, ADJUST THE EXPOSED HEIGHT OF THE BASE SO THAT THE TOP OF THE BASE IS 2'-0" ABOVE THE FINISHED GRADE OF THE PARKING LOT SURFACE.

2. LOCATE BASES ON CENTERLINES WHERE CENTERLINES ARE SHOWN ON THE PLANS, OR CENTER BASES 3'-0" BACK FROM THE CURB WHERE CENTERLINES ARE NOT SHOWN.

TYPICAL PARKING LOT FIXTURE DETAIL

NO SCALE

26560014.dgn

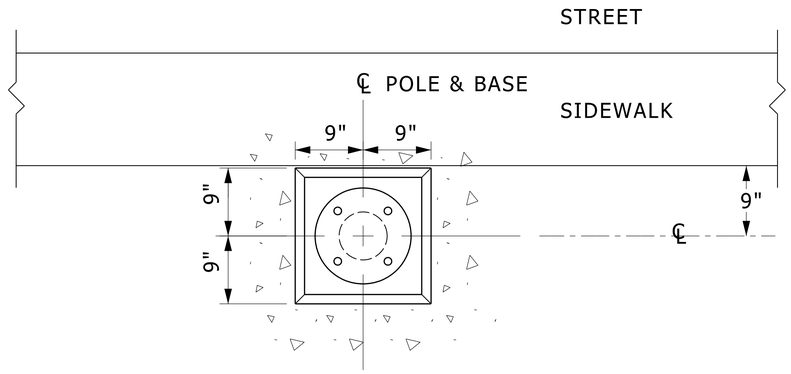

BASE PLAN VIEW

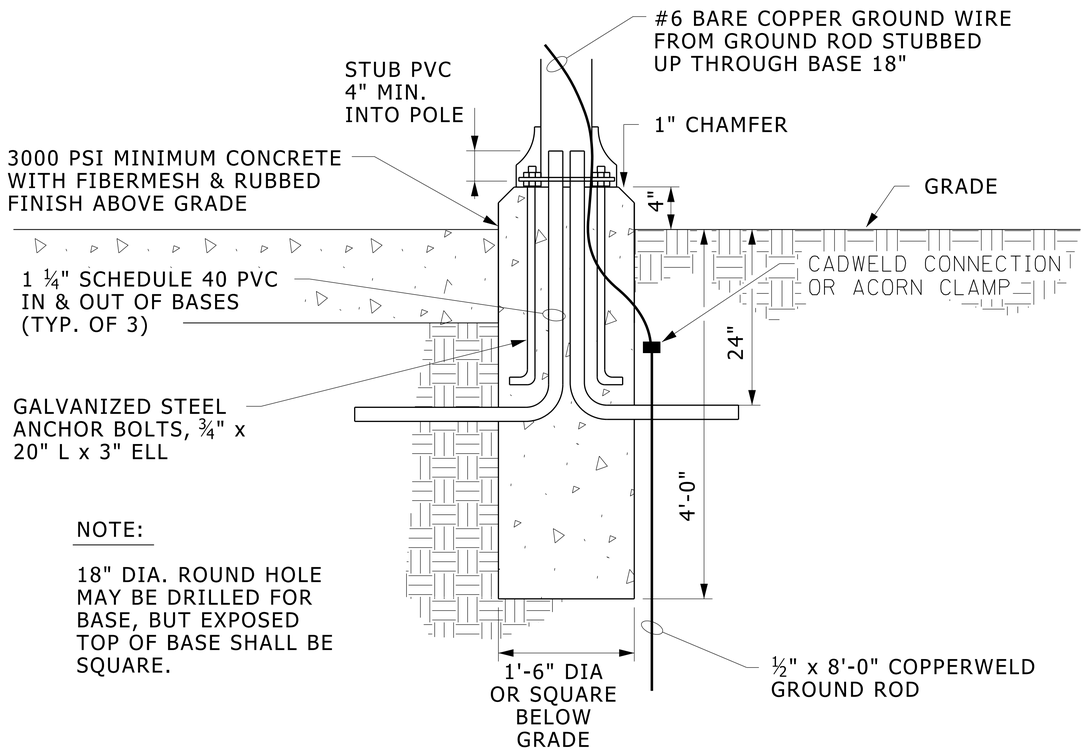

TYPICAL PEDESTRIAN LIGHT POLE BASE TOUCHING SIDEWALK

NO SCALE

26560015.dgn

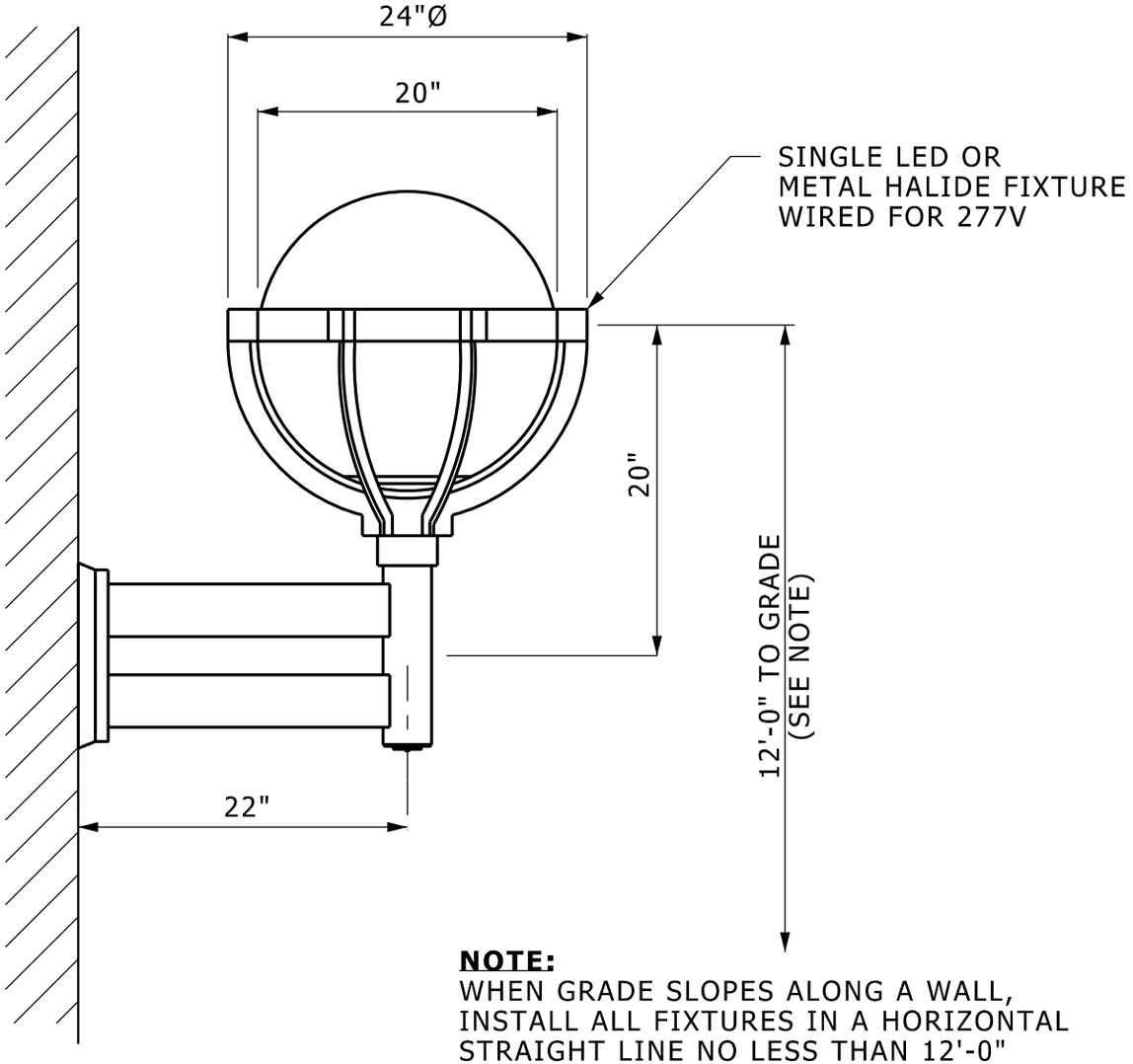

NOTE:
WHEN GRADE SLOPES ALONG A WALL, INSTALL ALL FIXTURES IN A HORIZONTAL STRAIGHT LINE NO LESS THAN 12'-0" ABOVE GRADE.

PEDESTRIAN LIGHT - WALL MOUNTED

NO SCALE

26560016.dgn

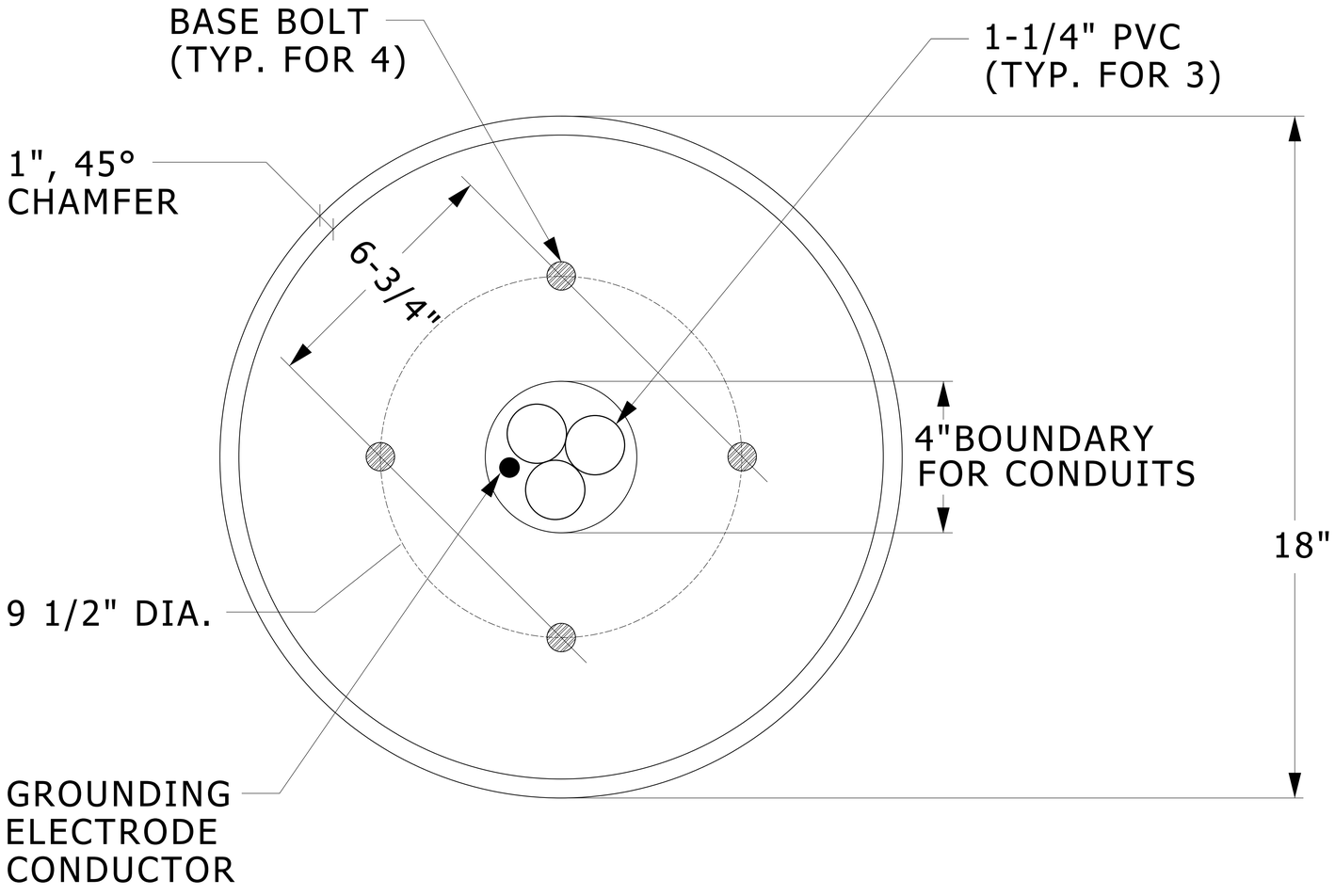

PEDESTRIAN POLE BASE - PLAN VIEW

NO SCALE

26560017.DGN

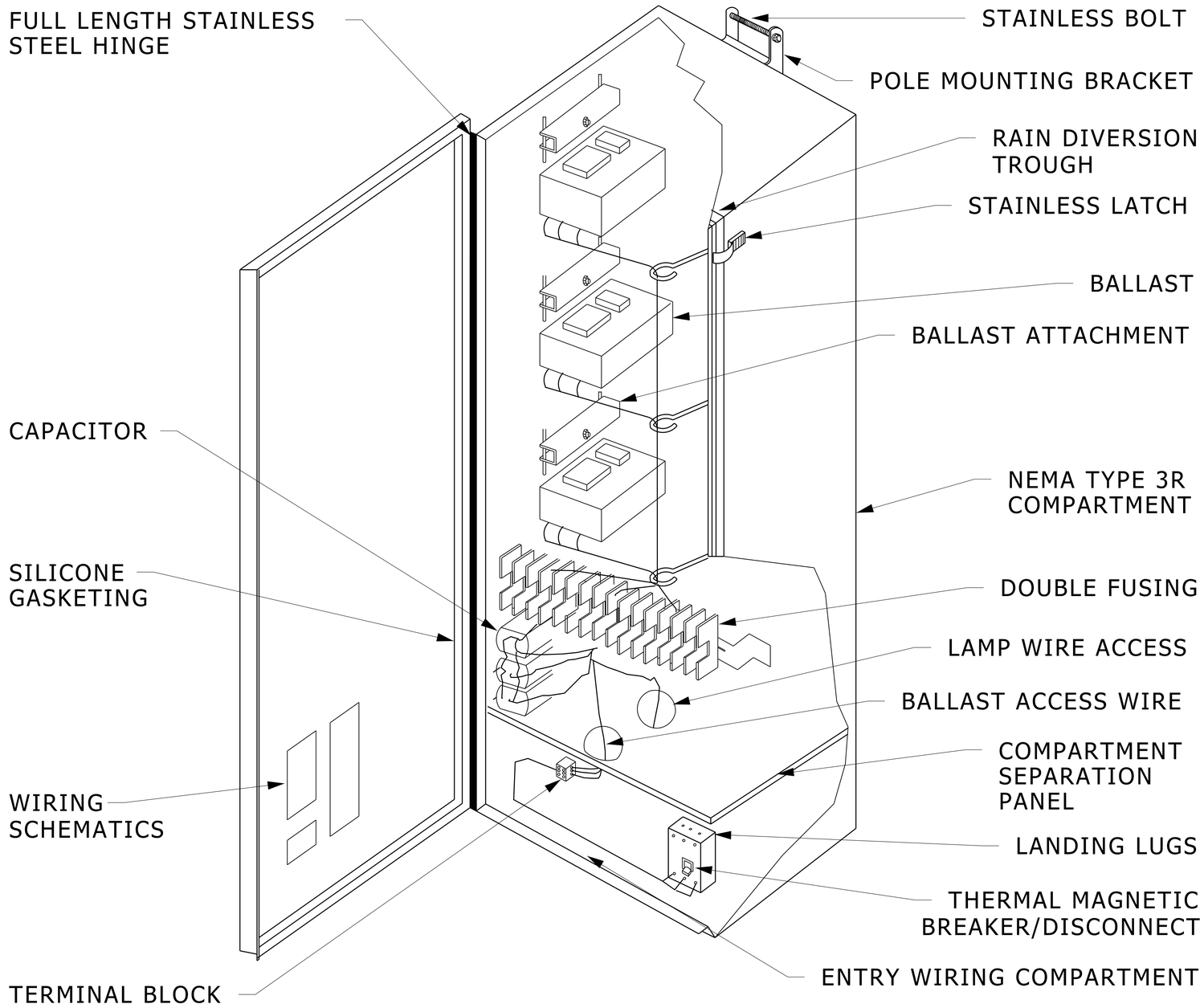

MUSCO ELECTRICAL ENCLOSURE DETAIL

NO SCALE

26560018.dgn

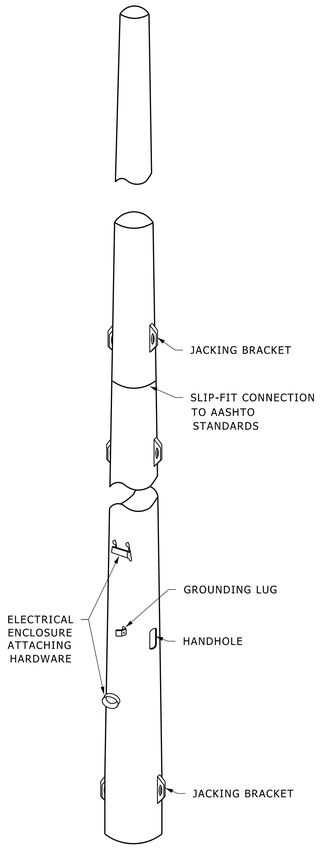

STEEL POLE

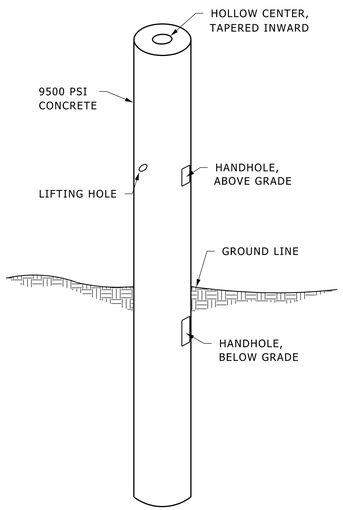

CONCRETE BASE

MUSCO BASE & POLE ELECTRICAL DETAIL

NO SCALE

26560019.dgn

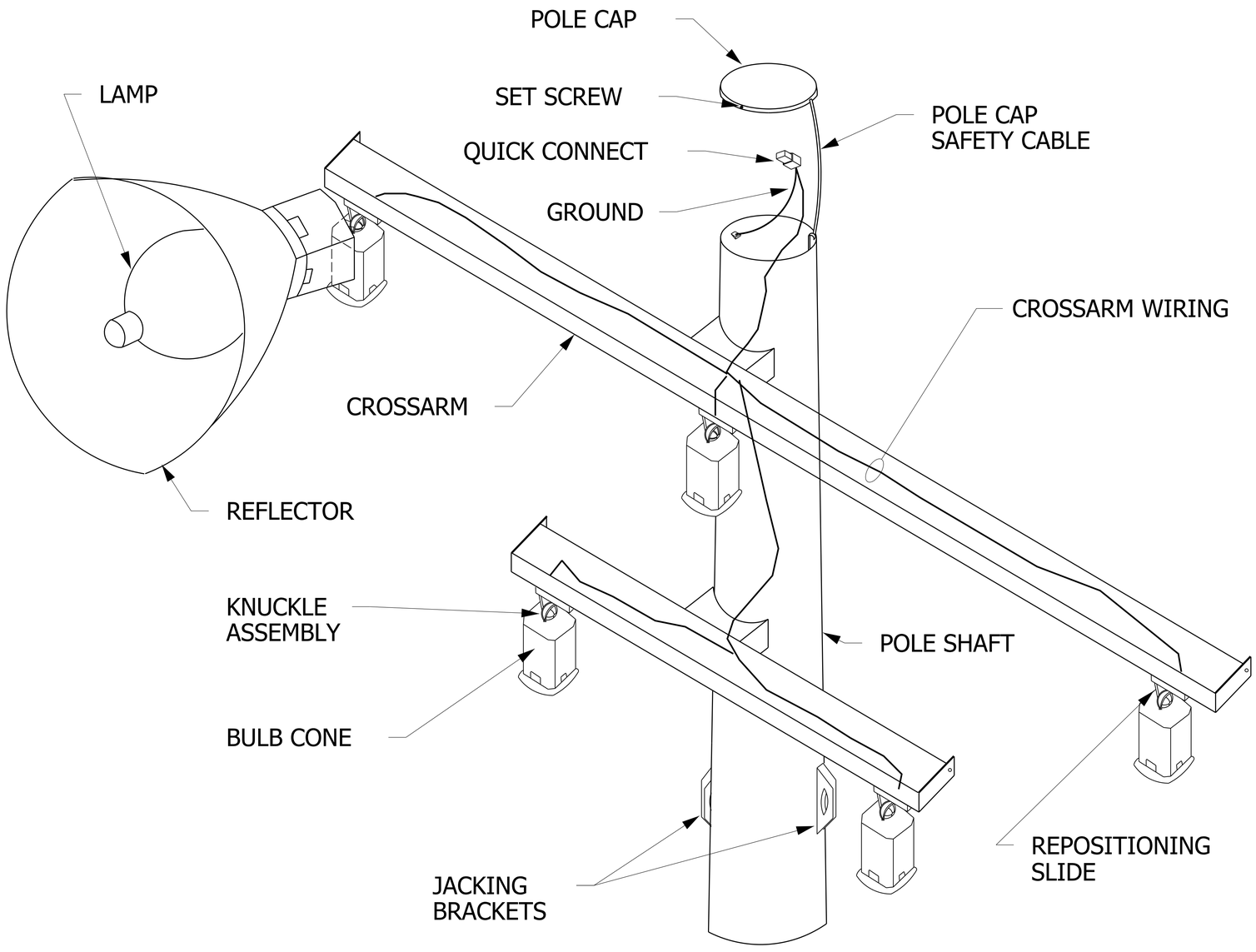

MUSCO
POLE TOP ASSEMBLY ELECTRICAL DETAIL

NO SCALE

26560020.dgn

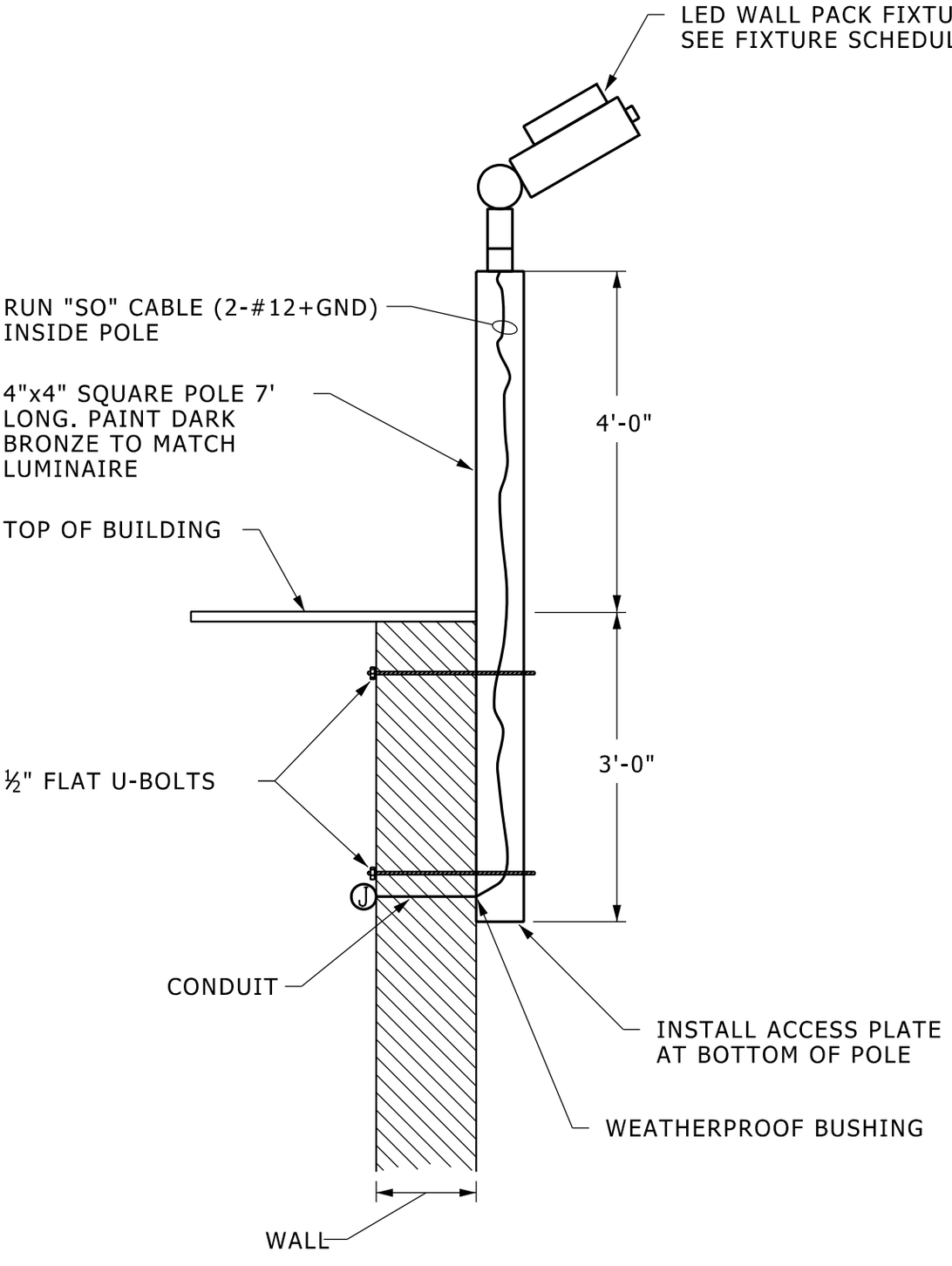

SLIPFITTER MOUNTING DETAIL

NO SCALE

26560021.dgn

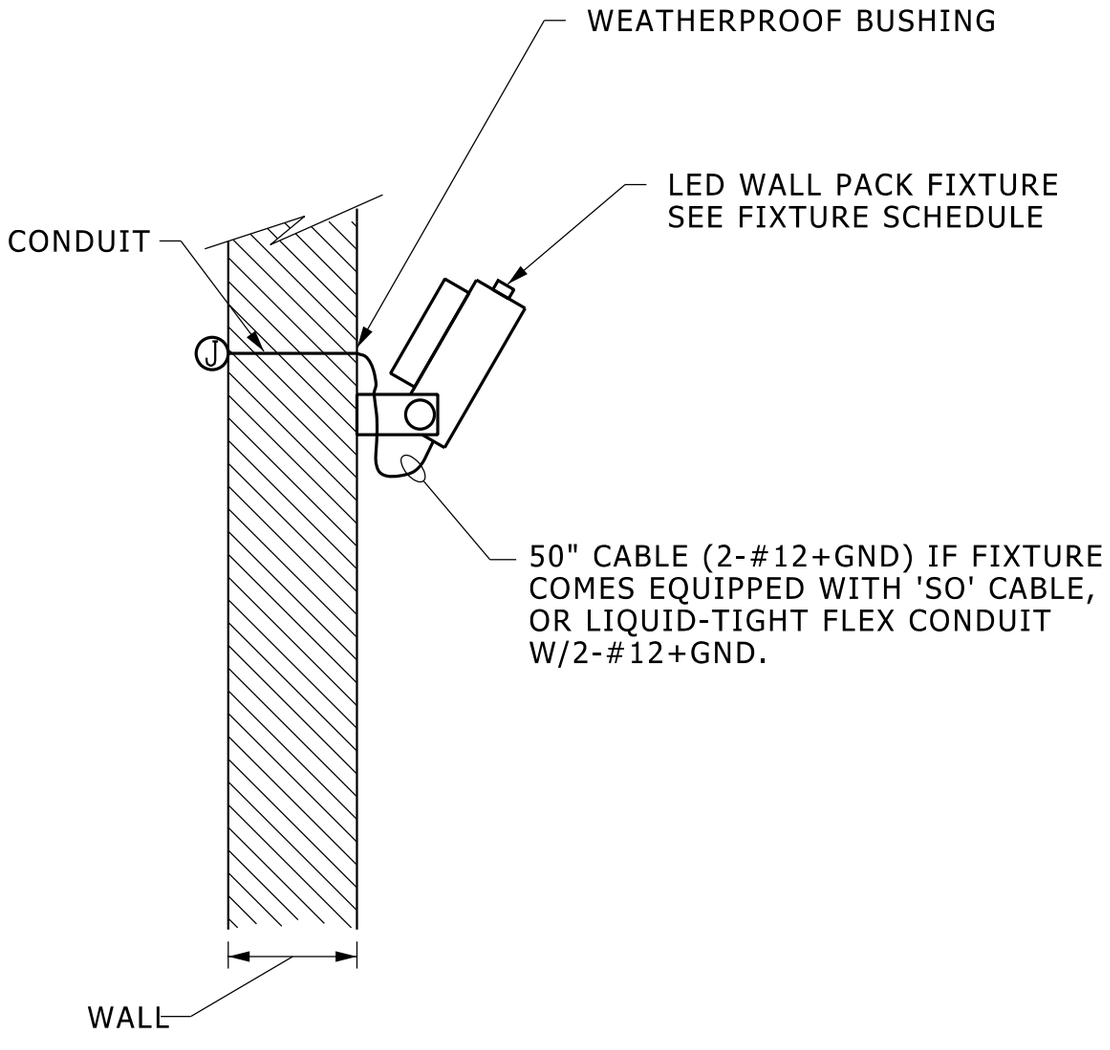

WALL MOUNTING DETAIL

NO SCALE

26560022.dgn

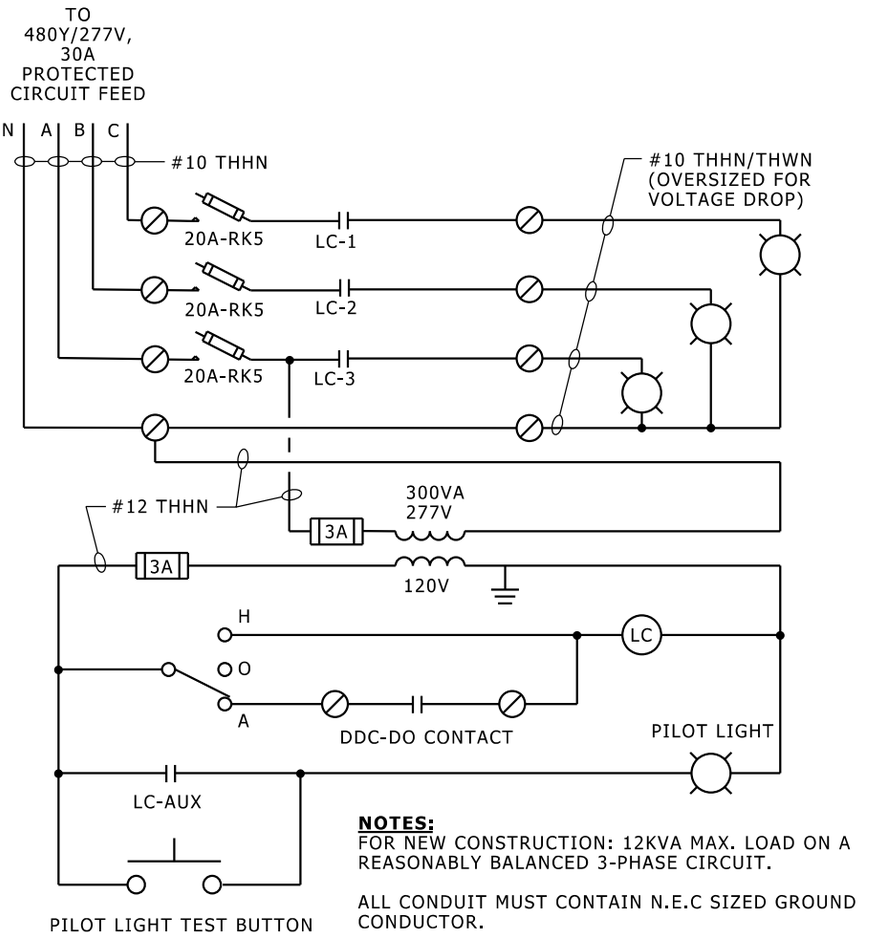

CONTROL WIRING FOR CONTACTOR

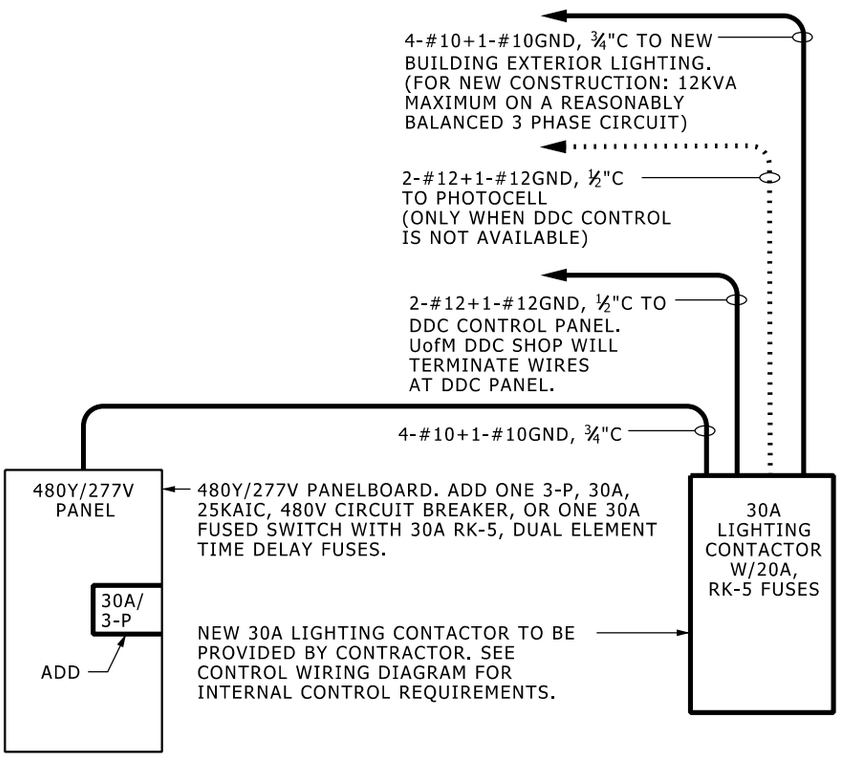

NOTE 1:

LABEL LIGHTING CONTACTOR
"BUILDING EXTERIOR LIGHTING CIRCUIT E-XXXX-X"

BUILDING NUMBER

SEQUENCE NUMBER

TYPICAL RISER FOR BUILDING-MOUNTED EXTERIOR LIGHTING POWER SOURCE

NO SCALE

26560024.DGN

SITE LIGHTING SPECIFICATIONS

PART 1 - GENERAL

A. Contact Miss Dig (1-800-482-7171) before performing any excavation work.

B. Contact the University Electrical Inspectors for an inspection before backfilling any sleeves, conduits and junction boxes, and before energizing any circuits.

C. During the installation of new wall lighting, the existing wall and Detroit Edison lighting shall be kept operational at the Contractor's expense. Coordinate with the University Electric Shop (Duane Briggs at 310-1041) for repairs to existing lighting.

D. The University will provide the fixtures, lamps and base covers for the wall lighting. The contractor must pick them up from a North Campus warehouse on Baxter Road. Contact the University Electric Shop (Duane Briggs at 310-1041) to arrange for pick-up of these items.

PART 2 - PRODUCTS

A. Fixture mounting components shall be as detailed on the drawings.

B. Sleeves for underground site lighting installations shall be 6" Schedule 40 PVC, UL Labeled for use with 90 Deg.C cables. Cantex or Carlon.

C. Conduits shall be Schedule 40 PVC, UL Labeled for use with 90 Deg.C cables. Cantex or Carlon.

D. Junction boxes shall be pre-cast polymer concrete or polymer foam, heavy duty rated, one size larger than required by the NEC, bottomless, with a single piece cover engraved "UM Outside Lighting" and attached with pentahead stainless steel bolts. CDR Systems, Carson-Brooks or Quazite.

E. Marking tape shall be plastic, vinyl or mylar, 6" wide, red for electrical and orange for telephone circuits, and labeled to indicate the type of circuit buried below.

F. Wire shall be single conductor stranded copper, with Type XHHW insulation rated 90 Deg.C in dry locations and 75 Deg.C in wet locations, 600 volts. American Insulated Wire, Rockbestos, Rome, Service Wire, Southwire or Triangle.

G. Terminations

1. Connectors for splicing and terminating lighting conductors in junction boxes shall be Homac No. RAB4 or RAB6 "Flood Seals" only.

2. Connectors for terminating lighting conductors in fixture bases shall be copper split bolt connectors with full tin plating. Blackburn 1HPW for #3 AWG wire and 4HPW for #6 AWG ground wire.

H. Fuse holders for lighting fixtures shall be Bussmann TRON No. HEB-AA in-line, waterproof fuse holders rated 300 volts, 30 amps.

I. Fuses for lighting fixtures shall be Bussmann No. KTK-5 rated 5 amps.

PART 3 - EXECUTION

A. Sleeves

1. Sleeves shall be buried at a minimum depth of 24" to their top. Sleeves shall extend a minimum of 12" beyond the pavement they pass under.

2. Sleeves shall be taped closed at both ends with duct tape.

3. Sleeve ends shall be marked with steel stakes, pipes or conduits that are 3' long minimum, driven vertically down at the sleeve ends to a depth of 6" below grade to their top.

B. Conduits

1. Conduit bends shall not be smaller than the radius of standard manufactured elbows (7-1/4" bend radius for 1-1/4" conduit).

2. Locate underground conduits as close to curbs, sidewalks and walls as possible to avoid interferences with future landscaping.

3. Where conduits can not be installed at a minimum depth of 24", install rigid steel conduits or pour concrete over the conduits in accordance with NEC Table 300-5.

C. Junction Boxes

1. Keep the number of junction boxes to a minimum. Splice inside fixtures wherever possible. Stagger splices as required to fit.

2. Locate junction boxes in mulched areas wherever possible. The top of the junction box shall be level with the existing grade.

3. Install junction boxes on a base of pea gravel or Class 2 sand at least 1'-0" deep.

4. Provide metal barriers in junction boxes containing circuits of two different voltages or containing both power and telephone circuits.

D. Sleeves and conduits shall be marked for their entire length with a marking tape buried 12" above them.

E. Fixture bases shall be plumb.

F. Lighting fixtures shall be aligned so that one spoke of the globe basket is perpendicular to the wall.

G. The center band of lighting fixtures shall be level.

H. Terminations

1. Provide one fuse holder and fuse for each globe.

2. Provide adequate slack in the fixture conductors so that the conductors can be pulled out for maintenance.

I. Grounding

1. Provide a 1/2" minimum diameter copper ground rod 8' minimum long for each light fixture.

2. Provide exothermic weld type ground connections or acorn clamps for concealed, underground and concrete encased ground connections, splices and taps.

J. Coordinate carefully with general contractor to insure needed conduits, wire, backfill, fixture mounting components and other materials are scheduled and installed to allow for required electrical inspections and proper long term operation of the lighting systems.

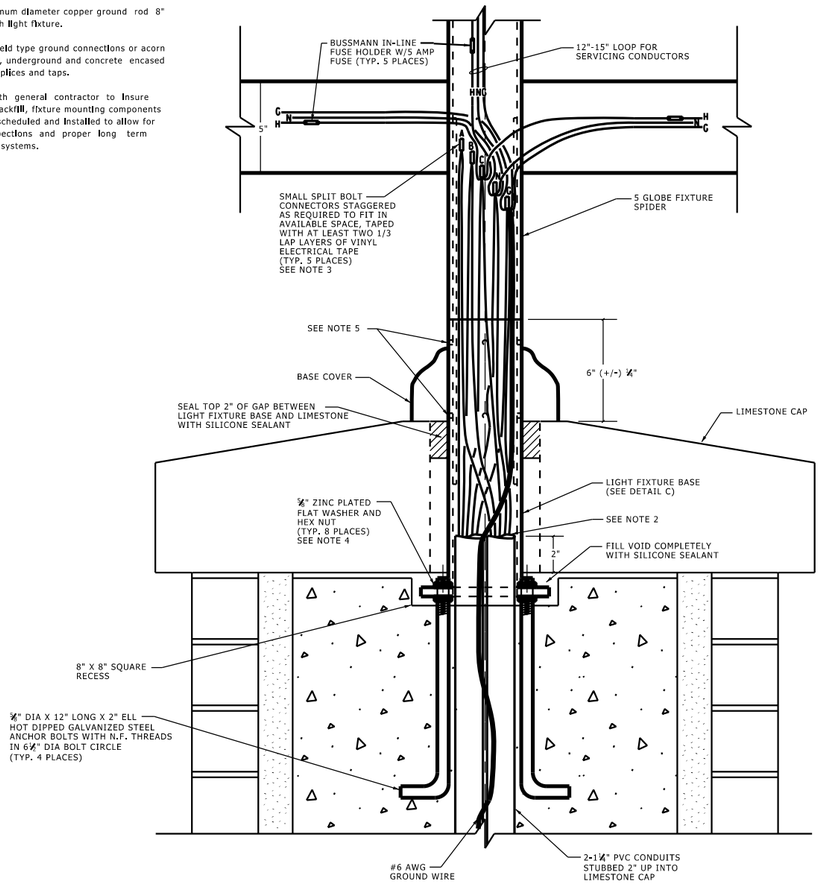

LIGHT FIXTURE ATTACHMENT - FIVE GLOBE FIXTURE
N.T.S.

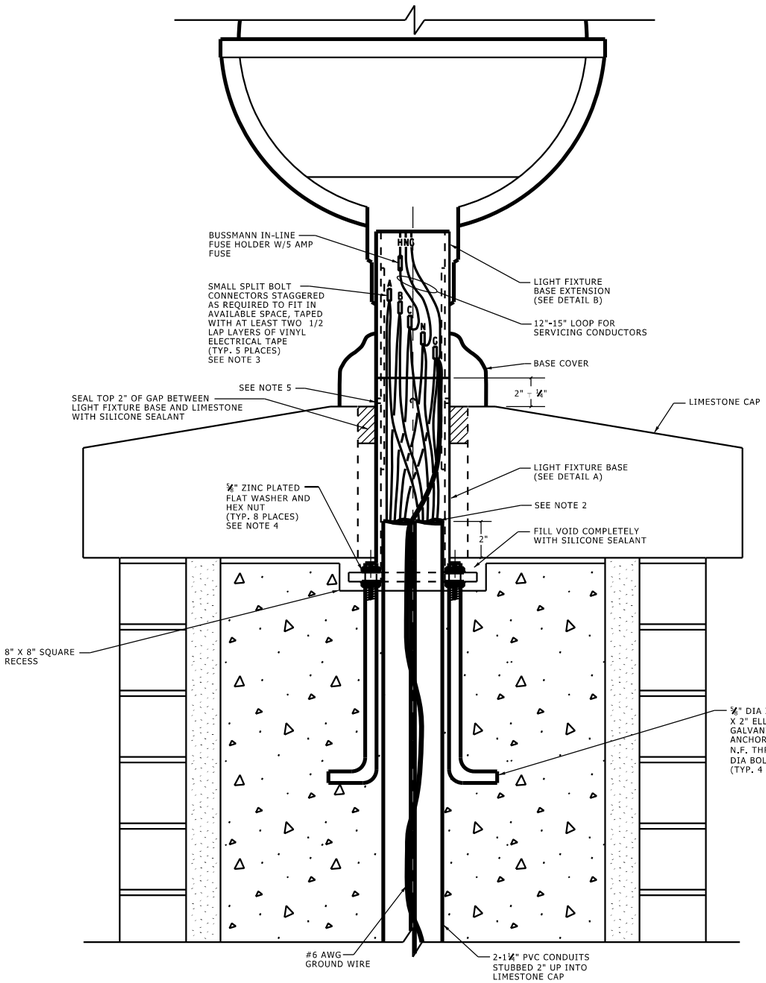

LIGHT FIXTURE ATTACHMENT - SINGLE GLOBE FIXTURE
N.T.S.

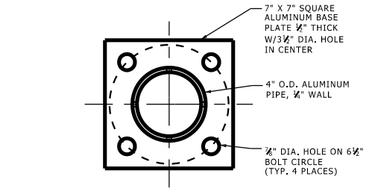

BASE TOP VIEW
N.T.S.

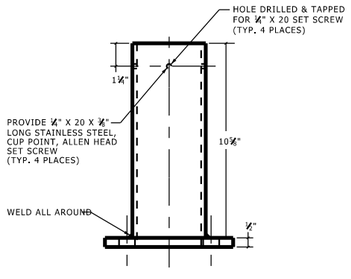

DETAIL A - LIGHT FIXTURE BASE SINGLE GLOBE FIXTURE
N.T.S.

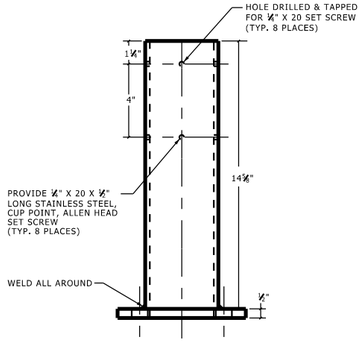

DETAIL C - LIGHT FIXTURE BASE FIVE GLOBE FIXTURE
N.T.S.

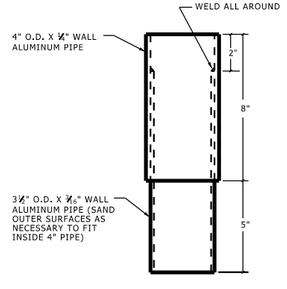

DETAIL B - LIGHT FIXTURE BASE EXTENSION SINGLE GLOBE FIXTURE
N.T.S.

NOTES:

1. LED OR METAL HALIDE FIXTURE. REFER TO FIXTURE SCHEDULE.
2. TEMPORARILY PLUG CONDUIT ENDS WITH DUX-SEAL DURING CONCRETE POURING TO KEEP CONDUITS FROM FILLING WITH CONCRETE.
3. CONNECT FIXTURES TO ALTERNATE PHASES OF POWER CIRCUIT TO BALANCE LOAD.
4. ADJUST ANCHOR BOLT HEX NUTS UNTIL LIGHT FIXTURE BASE IS PLUMB. TIGHTEN SET SCREWS TO SECURE BASE
5. EXTENSION OR FIXTURE SPIDER.

PEDESTRAIN LIGHT
TOP OF WALL MOUNTING

NO SCALE

26560025.DGN

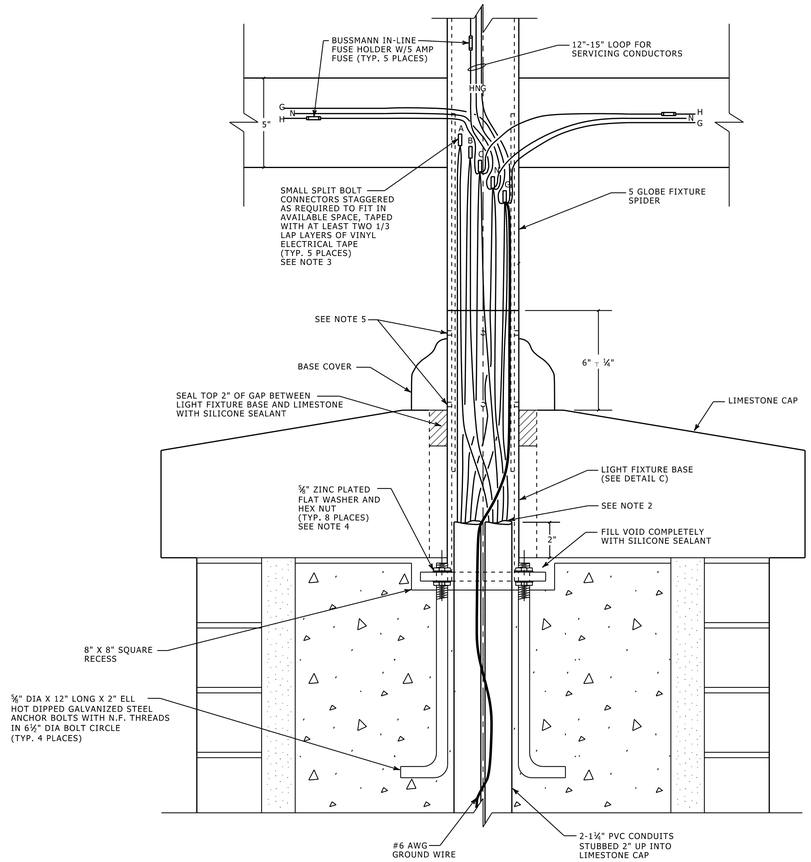

LIGHT FIXTURE ATTACHMENT - FIVE GLOBE FIXTURE
SCALE : 3" = 1'-0"

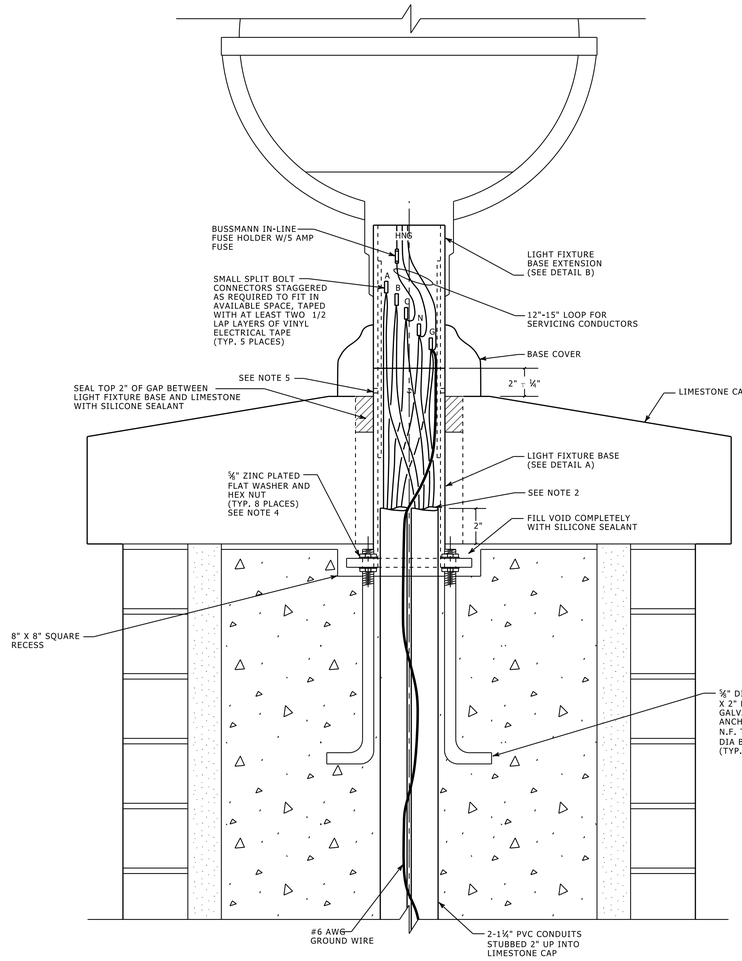

LIGHT FIXTURE ATTACHMENT - SINGLE GLOBE FIXTURE
SCALE : 3" = 1'-0"

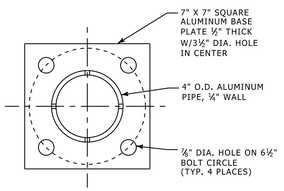

BASE TOP VIEW
SCALE : 3" = 1'-0"

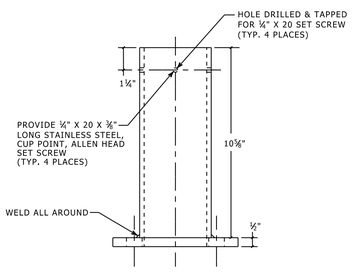

DETAIL A - LIGHT FIXTURE BASE SINGLE GLOBE FIXTURE
SCALE : 3" = 1'-0"

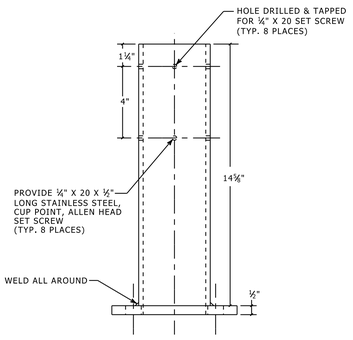

DETAIL C - LIGHT FIXTURE BASE FIVE GLOBE FIXTURE
SCALE : 3" = 1'-0"

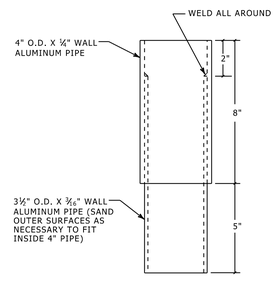

DETAIL B - LIGHT FIXTURE BASE EXTENSION SINGLE GLOBE FIXTURE
SCALE : 3" = 1'-0"

PARKING LOT/ROADWAY LIGHTING FIXTURE SCHEDULE

FIXTURE TYPE	DESCRIPTION	NO. OF SHOE BOX	QUARTZ RESTRIKE	QUANTITY
MBA1	SINGLE 250W MH FIXTURE MOUNTED ON 30'-0" TAPERED POLE LITHONIA: KSF1-250M-R3-277-RP09-PER-DBL-LPI VALMONT: 2908-45-80-8T4-D1-436RB408GF-45RPT-2T03AC-80R-335 DURO BLACK	1	NO	
MBA2	DOUBLE 250W MH FIXTURE MOUNTED ON 30'-0" TAPERED POLE LITHONIA: KSF1-250M-R3-277-RP09-PER-DBL-LPI VALMONT: 2908-45-80-8T4-D2-436RB408GF-45RPT-2T03AC-80R-335 DURO BLACK	2	NO	
MBA3	THREE 250W MH FIXTURE MOUNTED ON 30'-0" TAPERED POLE LITHONIA: KSF1-250M-R3-277-RP09-PER-DBL-LPI VALMONT: 2908-45-80-8T4-D6-436RB408GF-45RPT-2T03AC-80R-335 DURO BLACK	3	NO	
MBA4	FOUR 250W MH FIXTURE MOUNTED ON 30'-0" TAPERED POLE LITHONIA: KSF1-250M-R3-277-RP09-PER-DBL-LPI VALMONT: 2908-45-80-8T4-D4-436RB408GF-45RPT-2T03AC-80R-335 DURO BLACK	4	NO	
MBA1A	SINGLE 250W MH FIXTURE MOUNTED ON 35'-0" TAPERED POLE LITHONIA: KSF1-250M-R3-277-RP09-PER-DBL-LPI VALMONT: 3408-45-80-8T4-D1-436RB408GF-45RPT-2T03AC-80R-335 DURO BLACK	1	NO	
MBA2A	DOUBLE 250W MH FIXTURE MOUNTED ON 35'-0" TAPERED POLE LITHONIA: KSF1-250M-R3-277-RP09-PER-DBL-LPI VALMONT: 3408-45-80-8T4-D2-436RB408GF-45RPT-2T03AC-80R-335 DURO BLACK	2	NO	
MBA3A	THREE 250W MH FIXTURE MOUNTED ON 35'-0" TAPERED POLE LITHONIA: KSF1-250M-R3-277-RP09-PER-DBL-LPI VALMONT: 3408-45-80-8T4-D6-436RB408GF-45RPT-2T03AC-80R-335 DURO BLACK	3	NO	
MBA4A	FOUR 250W MH FIXTURE MOUNTED ON 35'-0" TAPERED POLE LITHONIA: KSF1-250M-R3-277-RP09-PER-DBL-LPI VALMONT: 3408-45-80-8T4-D4-436RB408GF-45RPT-2T03AC-80R-335 DURO BLACK	4	NO	
MBA1B	SINGLE 250W MH FIXTURE MOUNTED ON 30'-0" TAPERED POLE LITHONIA: KSF1-250M-R3-277-RP09-PER-DBL-QRS-LPI VALMONT: 3408-45-80-8T4-D4-436RB408GF-45RPT-2T03AC-80R-335 DURO BLACK	1	YES	
MBA1B	SINGLE 250W MH FIXTURE MOUNTED ON 30'-0" TAPERED POLE LITHONIA: KSF1-250M-R3-277-RP09-PER-DBL-QRS-LPI VALMONT: 2908-45-80-8T4-D1-436RB408GF-45RPT-2T03AC-80R-335 DURO BLACK	1	YES	
MBA2B	DOUBLE 250W MH FIXTURE MOUNTED ON 30'-0" TAPERED POLE LITHONIA: KSF1-250M-R3-277-RP09-PER-DBL-QRS-LPI VALMONT: 2908-45-80-8T4-D2-436RB408GF-45RPT-2T03AC-80R-335 DURO BLACK	2	YES	
MBA3B	THREE 250W MH FIXTURE MOUNTED ON 30'-0" TAPERED POLE LITHONIA: KSF1-250M-R3-277-RP09-PER-DBL-QRS-LPI VALMONT: 2908-45-80-8T4-D6-436RB408GF-45RPT-2T03AC-80R-335 DURO BLACK	3	YES	
MBA4B	FOUR 250W MH FIXTURE MOUNTED ON 30'-0" TAPERED POLE LITHONIA: KSF1-250M-R3-277-RP09-PER-DBL-QRS-LPI VALMONT: 2908-45-80-8T4-D4-436RB408GF-45RPT-2T03AC-80R-335 DURO BLACK	4	YES	
MBA1C	SINGLE 400W HPS FIXTURE MOUNTED ON 25'-0" TAPERED POLE LITHONIA: KSF2-400S-R3-277-RP09-PER-DBL-LPI VALMONT: 2408-45-80-8T4-D1-436RB408GF-45RPT-2T03AC-80R-335 DURO BLACK	1	NO	
MBA2C	DOUBLE 400W HPS FIXTURE MOUNTED ON 25'-0" TAPERED POLE LITHONIA: KSF2-400S-R3-277-RP09-PER-DBL-LPI VALMONT: 2408-45-80-8T4-D2-436RB408GF-45RPT-2T03AC-80R-335 DURO BLACK	2	NO	
MBA1D	SINGLE 250W MH FIXTURE MOUNTED ON 25'-0" TAPERED POLE LITHONIA: KSF1-250M-R3-277-RP09-PER-DBL-LPI VALMONT: 2408-45-80-8T4-D1-436RB408GF-45RPT-2T03AC-80R-335 DURO BLACK	1	NO	
MBA2D	DOUBLE 250W MH FIXTURE MOUNTED ON 25'-0" TAPERED POLE LITHONIA: KSF1-250M-R3-277-RP09-PER-DBL-LPI VALMONT: 2408-45-80-8T4-D2-436RB408GF-45RPT-2T03AC-80R-335 DURO BLACK	2	NO	
MBA1E	SINGLE 250W MH FIXTURE MOUNTED ON 20'-0" TAPERED POLE LITHONIA: KSF1-250M-R3-277-RP09-PER-DBL-LPI VALMONT: 1908-45-80-8T4-D1-436RB408GF-45RPT-2T03AC-80R-335 DURO BLACK	1	NO	
MBA2E	DOUBLE 250W MH FIXTURE MOUNTED ON 20'-0" TAPERED POLE LITHONIA: KSF1-250M-R3-277-RP09-PER-DBL-LPI VALMONT: 1908-45-80-8T4-D2-436RB408GF-45RPT-2T03AC-80R-335 DURO BLACK	2	NO	

PARKING LOT/ROADWAY LIGHTING FIXTURE SCHEDULE

FIXTURE TYPE	DESCRIPTION	NO. OF SHOE BOX	QUARTZ RESTRIKE	QUANTITY
MBA1F	SINGLE 400W MH FIXTURE MOUNTED ON 25'-0" TAPERED POLE LITHONIA: KSF2-400M-R3-277-RP09-PER-DBL-LPI VALMONT: 2408-45-80-8T4-D1-436RB408GF-45RPT-2T03AC-80R-335 DURO BLACK	1	NO	
MBA2F	DOUBLE 400W MH FIXTURE MOUNTED ON 25'-0" TAPERED POLE LITHONIA: KSF2-400M-R3-277-RP09-PER-DBL-LPI VALMONT: 2408-45-80-8T4-D2-436RB408GF-45RPT-2T03AC-80R-335 DURO BLACK	2	NO	
MBA1G	SINGLE 400W MH FIXTURE MOUNTED ON 30'-0" TAPERED POLE LITHONIA: KSF2-400M-R3-277-RP09-PER-DBL-LPI VALMONT: 2908-45-80-8T4-D1-436RB408GF-45RPT-2T03AC-80R-335 DURO BLACK	1	NO	
MBA2G	DOUBLE 400W MH FIXTURE MOUNTED ON 30'-0" TAPERED POLE LITHONIA: KSF2-400M-R3-277-RP09-PER-DBL-LPI VALMONT: 2908-45-80-8T4-D2-436RB408GF-45RPT-2T03AC-80R-335 DURO BLACK	2	NO	
MBA1H	SINGLE 1000W MH FIXTURE MOUNTED ON 30'-0" TAPERED POLE LITHONIA: KSF3-1000M-R3-277-RP09-PER-DBL-LPI VALMONT: 2908-45-80-8T4-D1-436RB408GF-45RPT-2T03AC-80R-335 DURO BLACK	1	NO	
MBA2H	DOUBLE 1000W MH FIXTURE MOUNTED ON 30'-0" TAPERED POLE LITHONIA: KSF3-1000M-R3-277-RP09-PER-DBL-LPI VALMONT: 2908-45-80-8T4-D2-436RB408GF-45RPT-2T03AC-80R-335 DURO BLACK	2	NO	
MBA1I	SINGLE 1000W MH FIXTURE MOUNTED ON 25'-0" TAPERED POLE LITHONIA: KSF3-1000M-R3-277-RP09-PER-DBL-LPI VALMONT: 2408-45-80-8T4-D1-436RB408GF-45RPT-2T03AC-80R-335 DURO BLACK	1	NO	
MBA2I	DOUBLE 1000W MH FIXTURE MOUNTED ON 25'-0" TAPERED POLE LITHONIA: KSF3-1000M-R3-277-RP09-PER-DBL-LPI VALMONT: 2408-45-80-8T4-D2-436RB408GF-45RPT-2T03AC-80R-335 DURO BLACK	2	NO	
MBA1J	SINGLE 1000W HPS FIXTURE MOUNTED ON 30'-0" TAPERED POLE LITHONIA: KSF3-1000S-R3-277-RP09-PER-DBL-LPI VALMONT: 2908-45-80-8T4-D1-436RB408GF-45RPT-2T03AC-80R-335 DURO BLACK	1	NO	
MBA2J	DOUBLE 1000W HPS FIXTURE MOUNTED ON 30'-0" TAPERED POLE LITHONIA: KSF3-1000S-R3-277-RP09-PER-DBL-LPI VALMONT: 2908-45-80-8T4-D2-436RB408GF-45RPT-2T03AC-80R-335 DURO BLACK	2	NO	

GENERAL NOTES:

1. THE CONTRACTOR SHALL PROVIDE THE LIGHTING FIXTURES, POLES, LAMPS AND ANCHOR BOLTS.
2. THE ANCHOR BOLTS SHALL BE 1" X 42" X 4" ELL, HOT DIPPED GALVANIZED STEEL. EACH ANCHOR BOLT SHALL INCLUDE 2 FLAT WASHERS AND 2 HEX NUTS.
3. ROUTE UNDERGROUND CONDUITS AS CLOSE TO CURBS AND SIDEWALKS AS POSSIBLE TO AVOID INTERFERENCES WITH FUTURE LANDSCAPING.
4. PROVIDE A THIRD (SPARE) 1 ¼"C. CONDUIT STUBBED OUT 3' FROM BASE AT FIXTURES INDICATED BY "STUB SPARE C." ON PLAN DRAWINGS FOR FUTURE EXTENSION OF THE LIGHTING CIRCUIT.

STREET/PARKING LOT LIGHTING LEGEND	
□→	SINGLE SHOE BOX FIXTURE ON POLE
□→□	DOUBLE SHOE BOX FIXTURE ON POLE
⌓	EMERGENCY TELEPHONE KIOSK
E	EXISTING

26560027.dgn

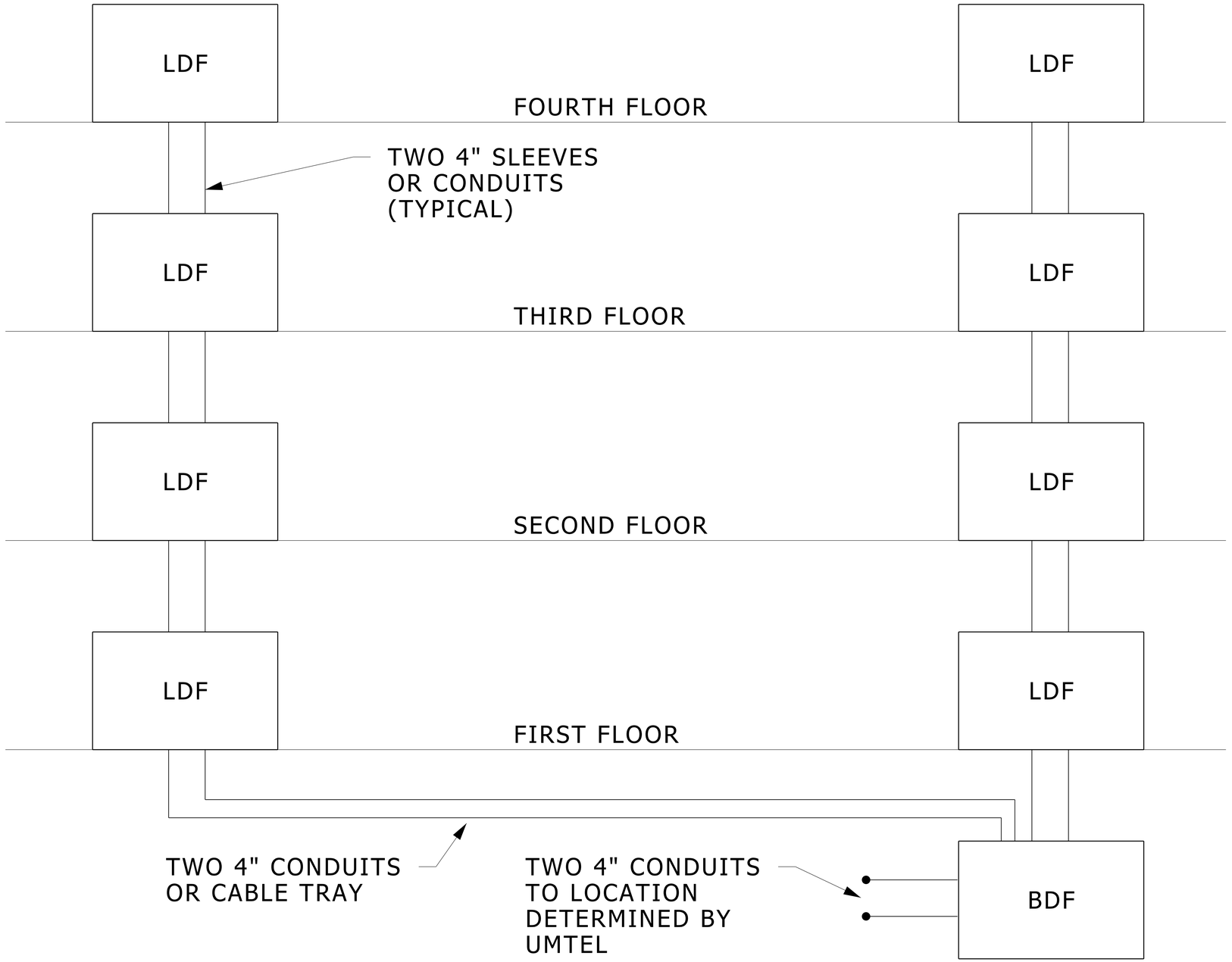

TYPICAL BUILDING ELEVATION TELECOMMUNICATION ROOM ARRANGEMENTS

NO SCALE

27200001.dgn

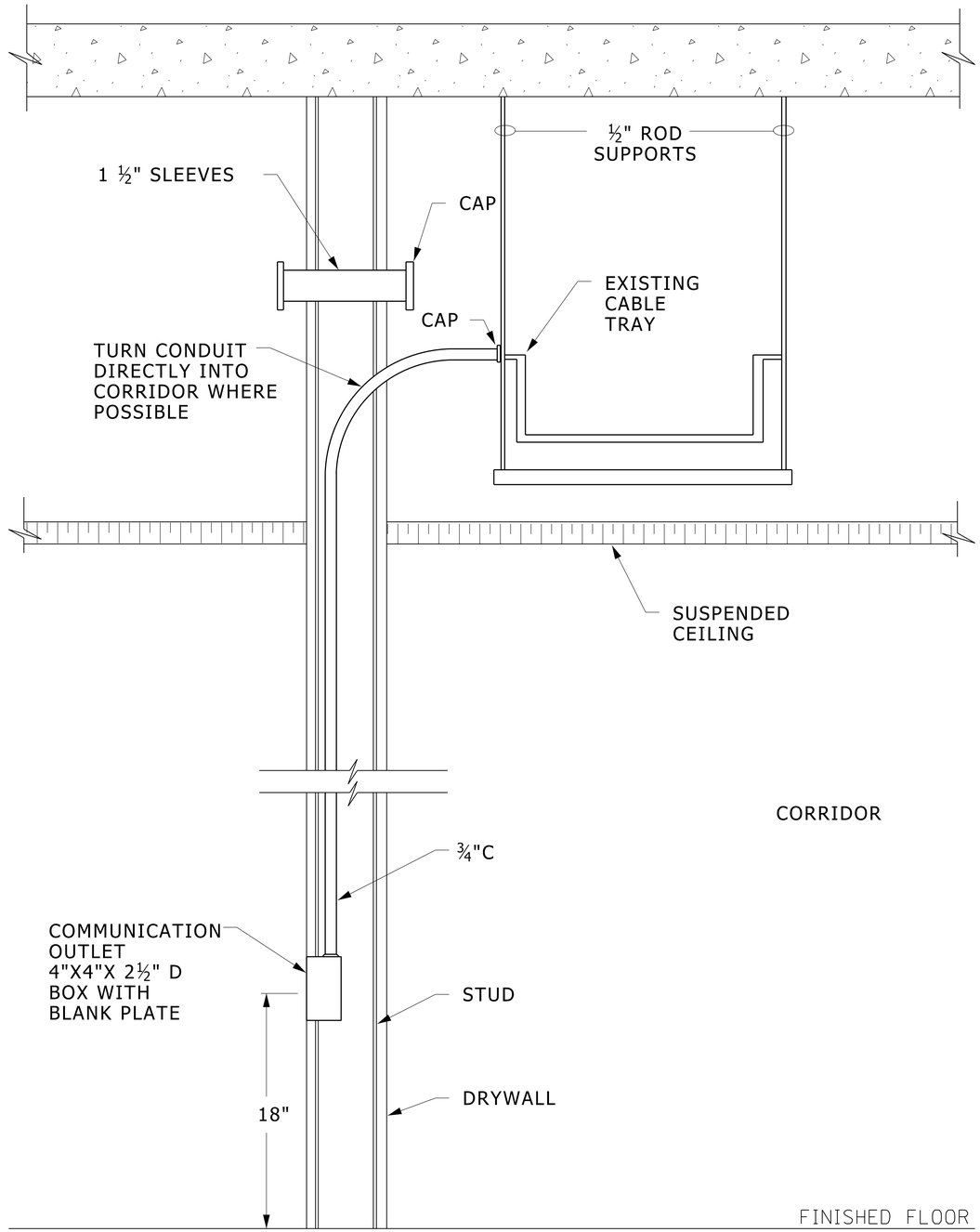

TYPICAL ELEVATION COMMUNICATION DETAIL

NO SCALE

27200002.dgn

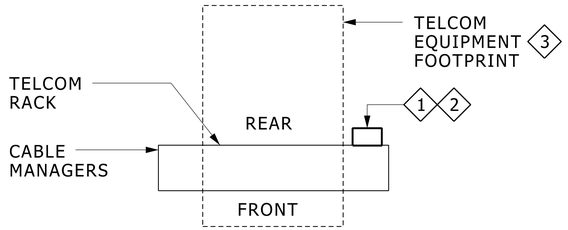

PLAN VIEW

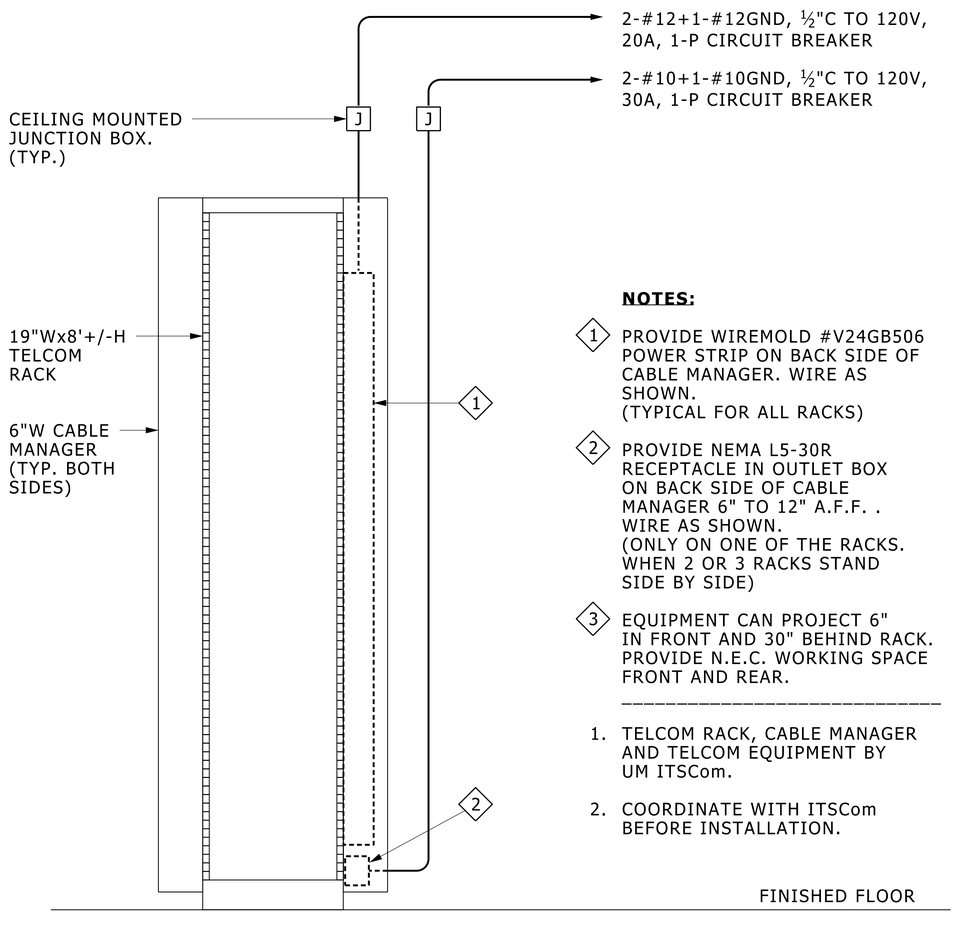

NOTES:

1. PROVIDE WIREMOLD #V24GB506 POWER STRIP ON BACK SIDE OF CABLE MANAGER. WIRE AS SHOWN. (TYPICAL FOR ALL RACKS)
2. PROVIDE NEMA L5-30R RECEPTACLE IN OUTLET BOX ON BACK SIDE OF CABLE MANAGER 6" TO 12" A.F.F. . WIRE AS SHOWN. (ONLY ON ONE OF THE RACKS. WHEN 2 OR 3 RACKS STAND SIDE BY SIDE)
3. EQUIPMENT CAN PROJECT 6" IN FRONT AND 30" BEHIND RACK. PROVIDE N.E.C. WORKING SPACE FRONT AND REAR.

---

1. TELCOM RACK, CABLE MANAGER AND TELCOM EQUIPMENT BY UM ITSCom.
2. COORDINATE WITH ITSCom BEFORE INSTALLATION.

ELEVATION

TELECOMMUNICATION RACK POWER DETAIL

NO SCALE

27200003.dgn

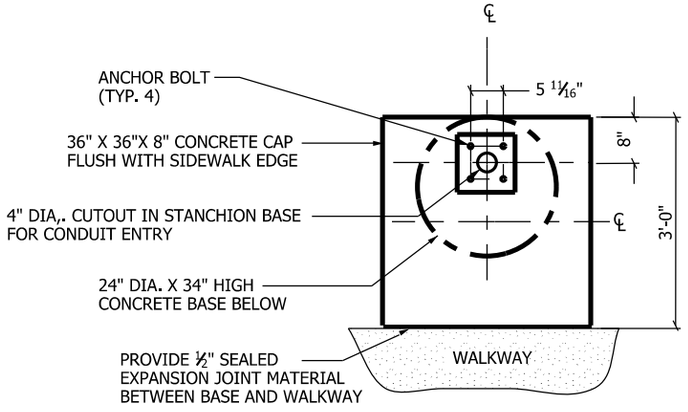

BASE PLAN VIEW

NOTES:

1. TELEPHONE STANCHION, TELEPHONE BACK BOX, BEACON, STANCHION LIGHT, PHONE AND PHONE LINE FURNISHED AND INSTALLED BY UM ITCOM.
2. CONTRACTOR TO PROVIDE CONCRETE BASE, GROUND ROD, POWER AND PHONE CONDUITS, 4" SQ. BOX AND ASSOCIATED FITTINGS AS REQUIRED.
3. CONTRACTOR TO PROVIDE POWER WIRING AND CONNECTIONS TO STANCHION LIGHT AND BEACON AS SHOWN ON DETAIL #1675006.
4. BOTH CONDUITS AND GROUND WIRE MUST BE STUBBED UP WITHIN THE 4" DIA. CIRCLE AS SHOWN ON PLAN VIEW.
5. PROVIDE CLASS II SAND BACKFILL COMPACTED TO 95% IN EXCAVATED AREAS. SEE SPECIFICATIONS.
6. PROVIDE 6" OF TOP SOIL IN LAWN AREAS. GRADE AND SEED TO MATCH EXISTING.
7. ANCHOR BOLTS FURNISHED BY ITCom AND POURED IN BASE BY CONTRACTOR.
8. TRANSITION TO 1 1/2" RIGID GALVANIZED STEEL CONDUIT AT BUILDING WALL PENETRATION TO ITCom CLOSET, SWEEPS ONLY (10X OUTSIDE DIAMETER OF CONDUIT), NO LB'S ALLOWED.
9. PROVIDE 12" SQUARE (MIN.) PULL BOX EVERY 180° OF BEND. IN PVC/RGS CONDUIT RUN TO ITCom CLOSET.

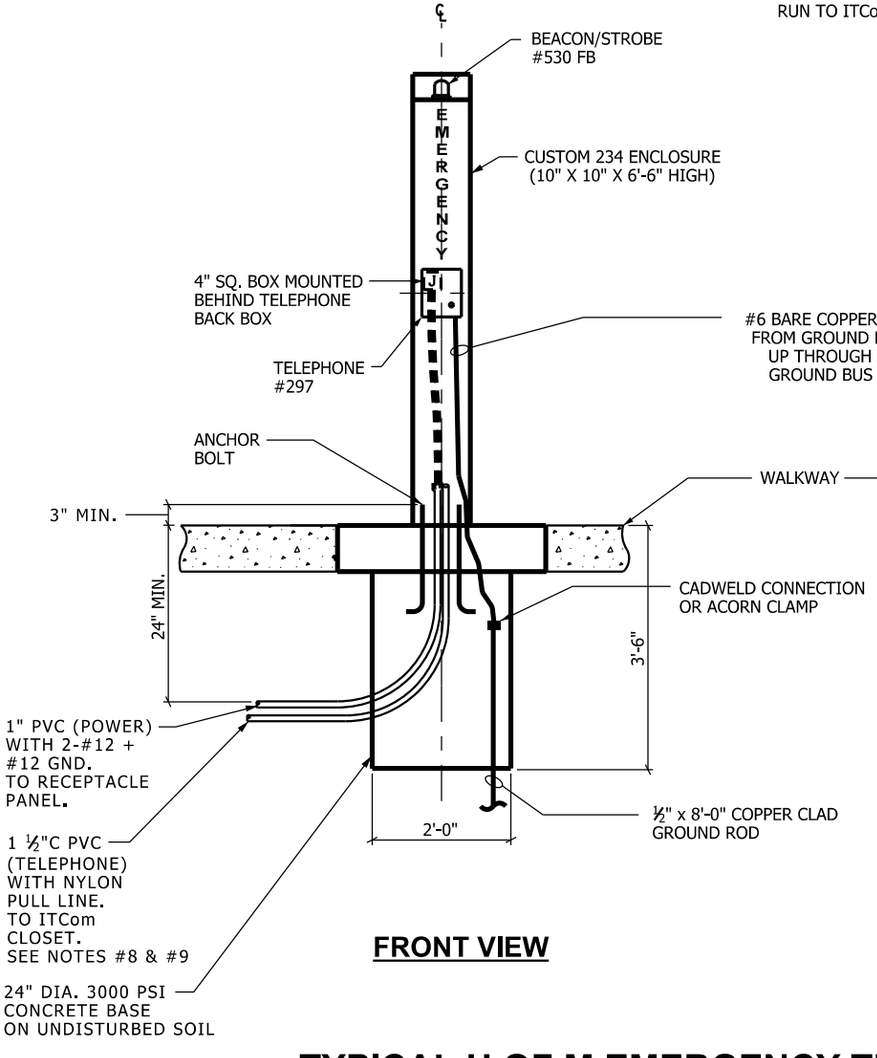

FRONT VIEW

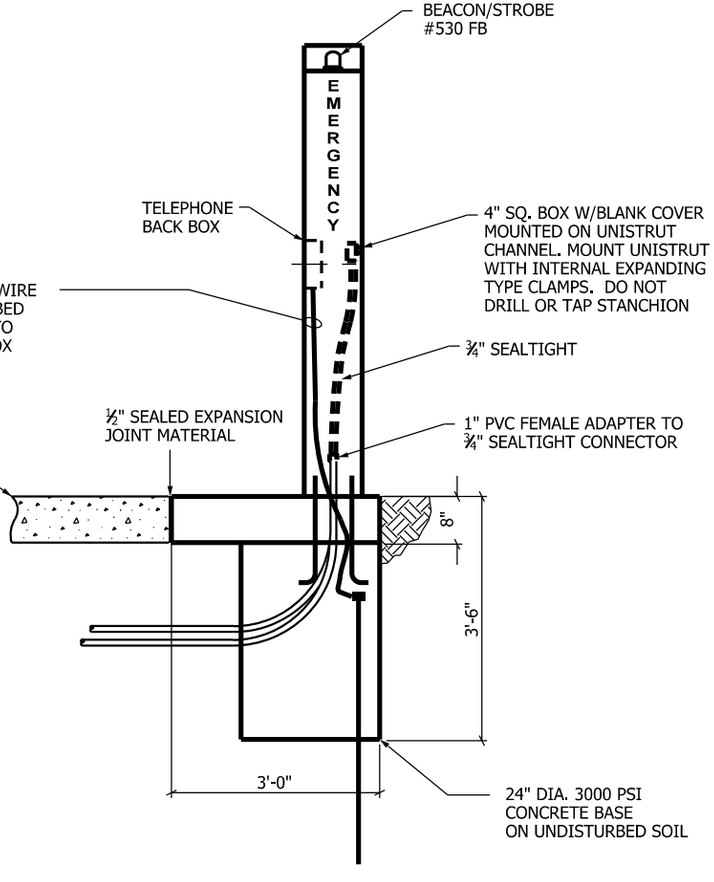

RIGHT SIDE VIEW

TYPICAL U OF M EMERGENCY TELEPHONE KIOSK DETAIL

NO SCALE

27200005.dgn

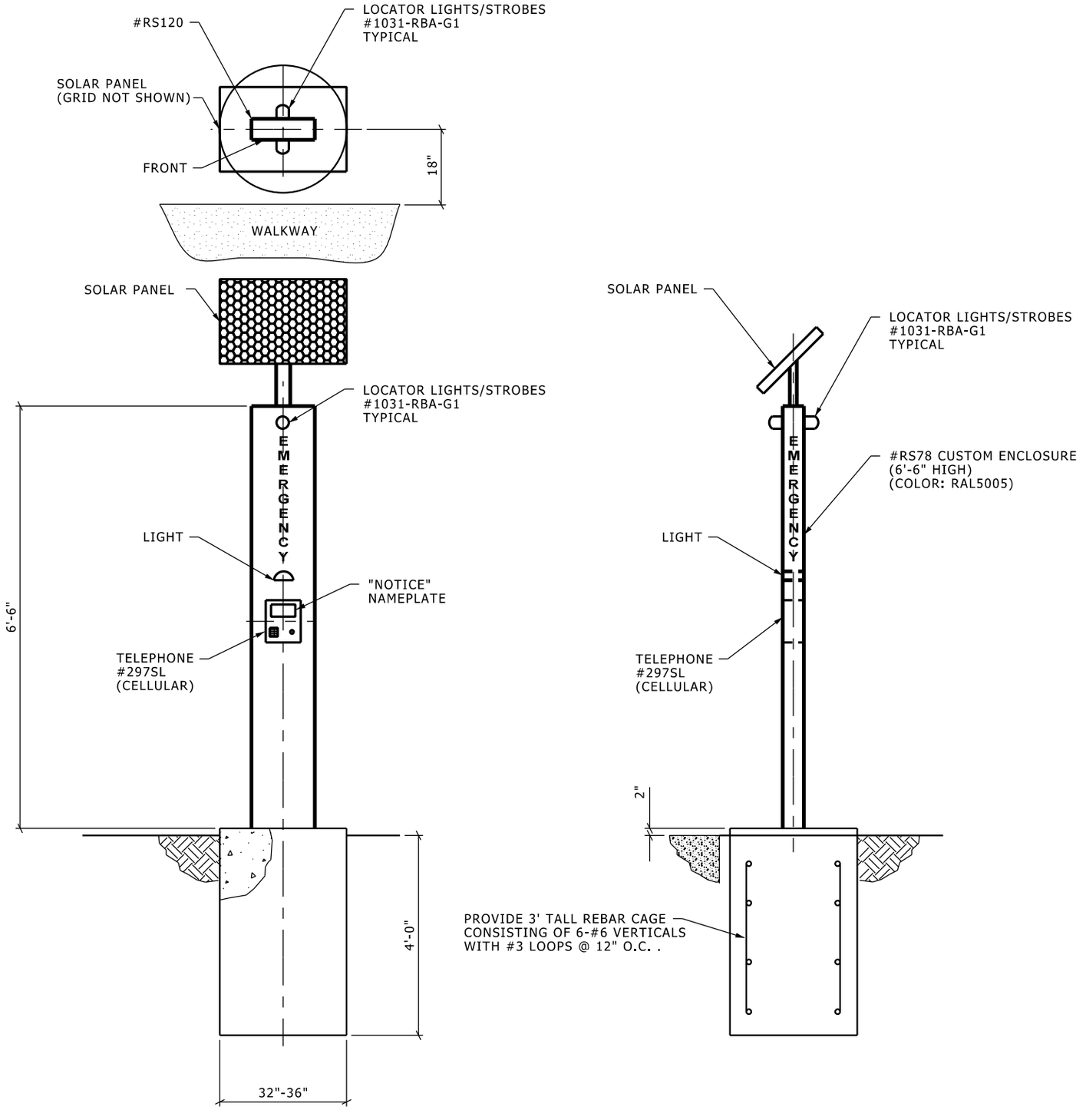

EMERGENCY TELEPHONE FREE STANDING (NO POWER AND TELEPHONE NEARBY)

NO SCALE

27200006.dgn

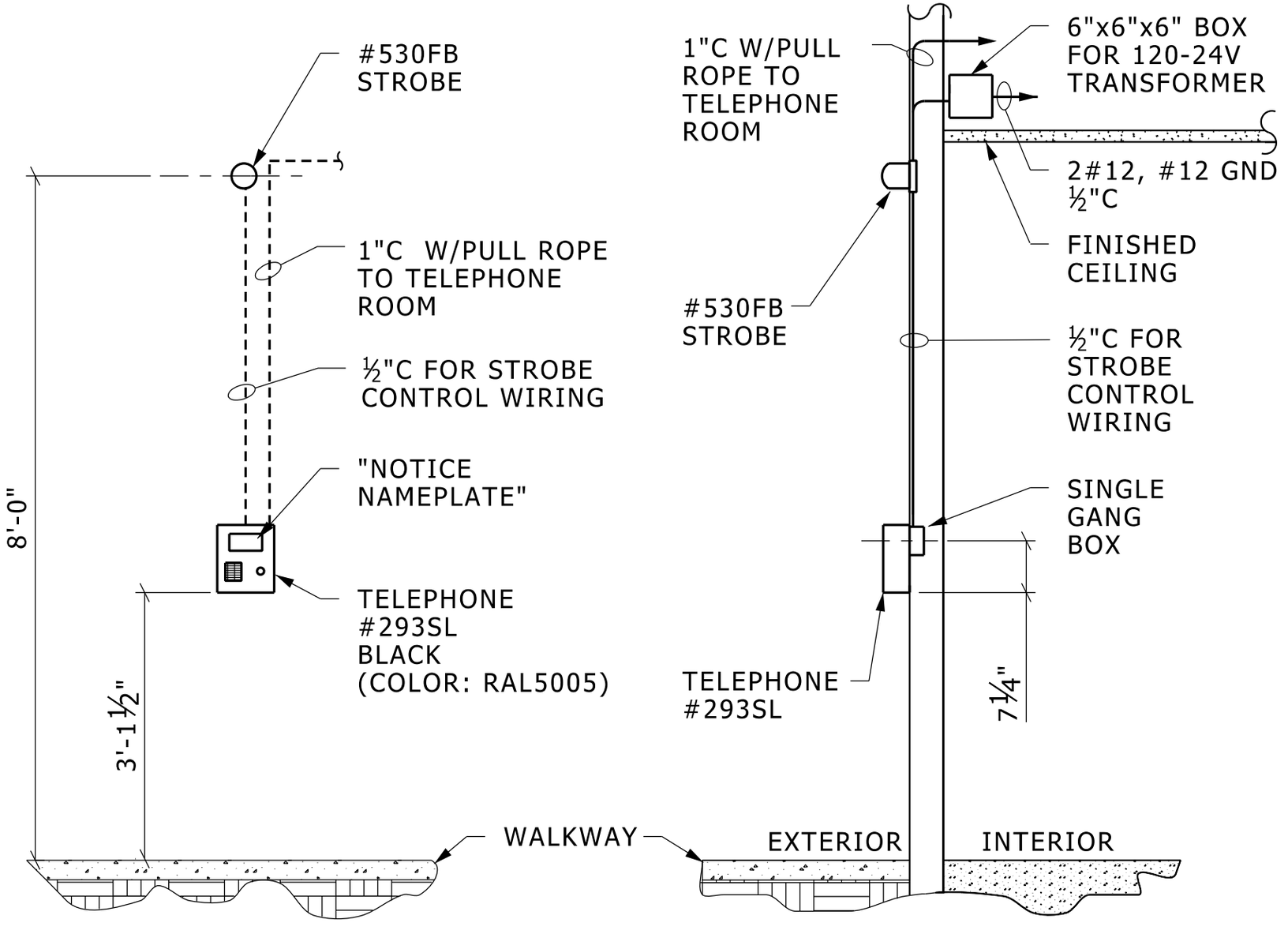

SEE DETAIL #1675005 FOR WIRING
SEE DETAIL #1675006 FOR DRILLING DETAIL ON TELEPHONE

EMERGENCY TELEPHONE NEAR WALKWAY SURFACE MOUNTED TO BUILDING

NO SCALE

27200007.dgn

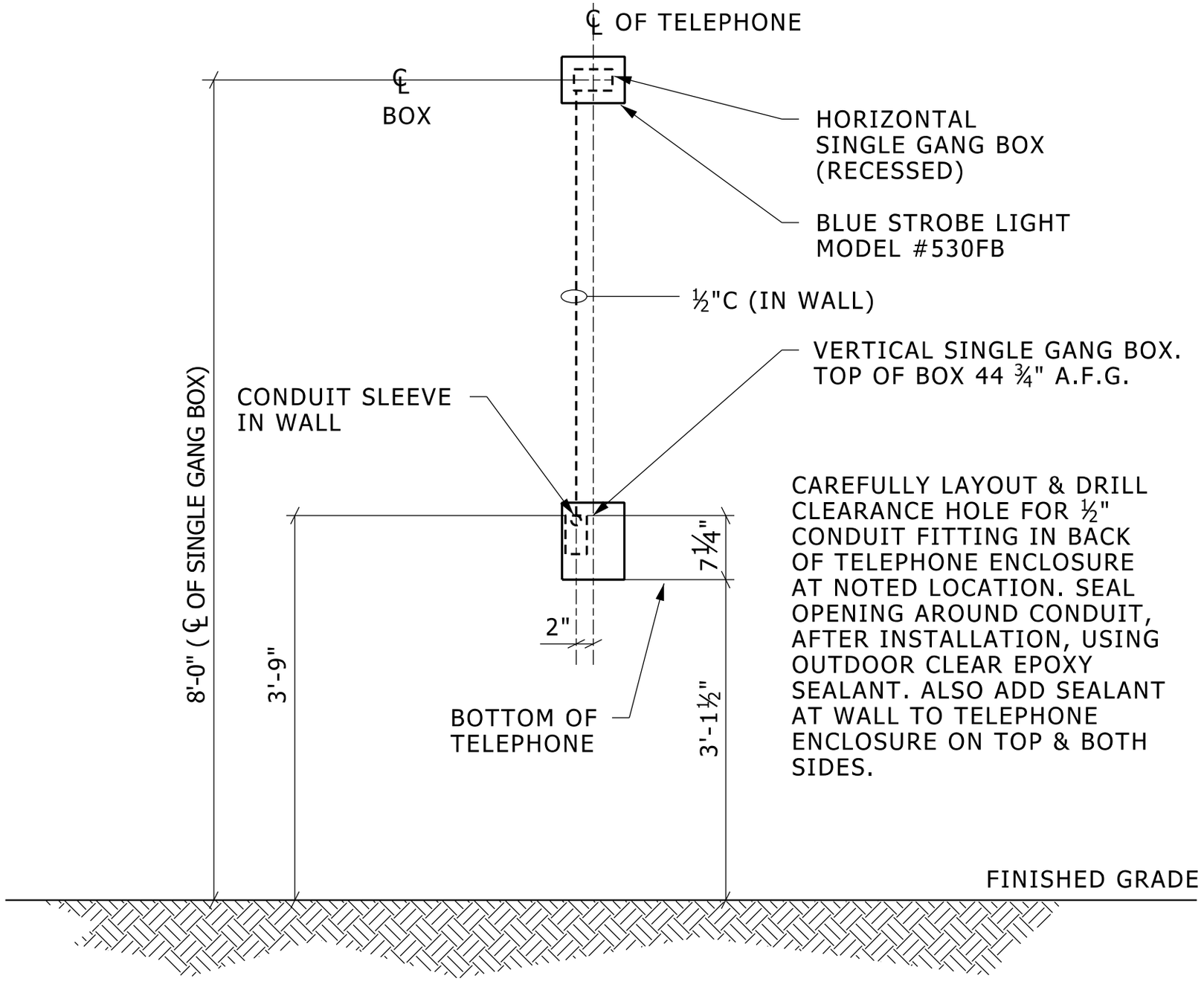

MOUNTING OF #293SL TELEPHONE

NO SCALE

27200008.dgn

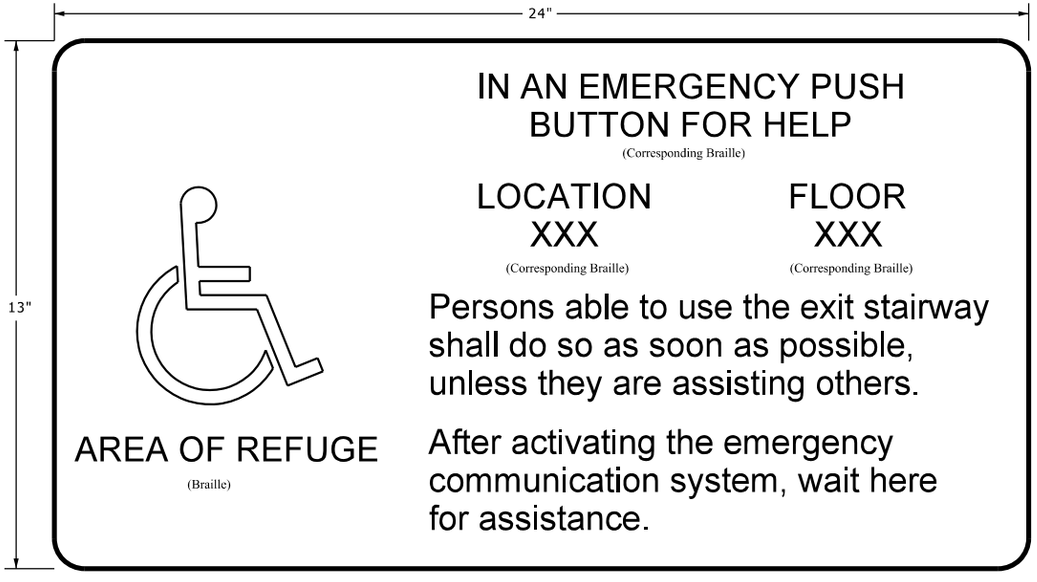

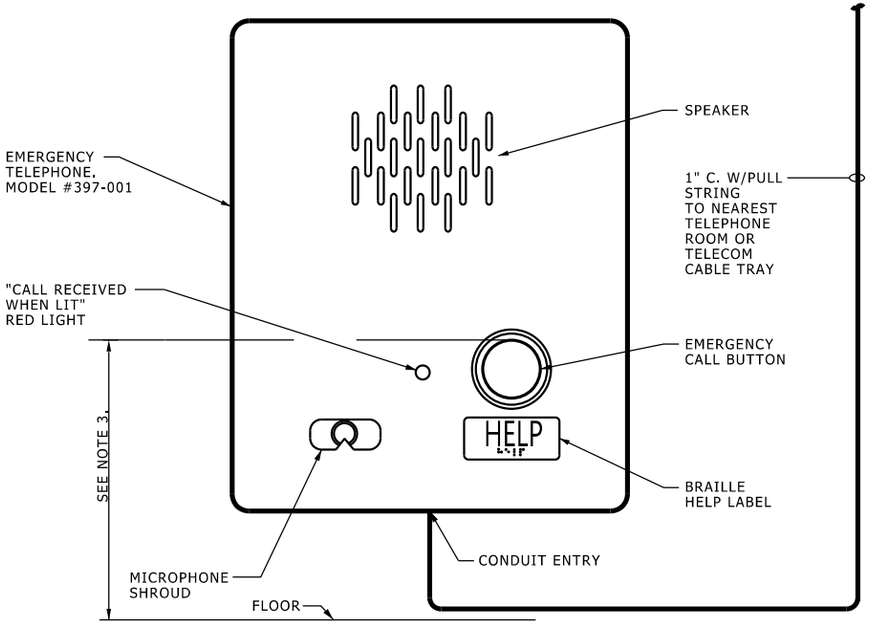

NOTES:

1. EMERGENCY TELEPHONE MANUFACTURED BY GAI-TRONICS CORP., MODEL 397-001. TELEPHONE AND TELEPHONE CABLE FURNISHED AND INSTALLED BY ITSComm. BACKBOX FURNISHED BY ITScomm AND INSTALLED BY CONTRACTOR.
2. TELEPHONE IS 10" TALL X 8.5" WIDE X 2.5' DEEP AND INCLUDES A FLUSH MOUNT BACK BOX. FLUSH MOUNT TELEPHONE UNLESS SURFACE MOUNTING IS SHOWN ON PLAN DRAWING. TO SURFACE MOUNT, REQUEST OPTIONAL GAI-TRONICS MODEL 238 BACK BOX FROM ITSComm.
3. MOUNT TELEPHONE SO TOP OF RED EMERGENCY CALL BUTTON IS CLOSE TO BUT NO MORE THAN 48" ABOVE FINISHED FLOOR.
4. PROVIDE TELECOM CONDUIT AND ASSOCIATED FITTINGS.
5. BOND THE TELECOM CONDUIT AT THE TELECOM CABLE TRAY OR TELECOM ROOM GROUND BUS BAR.
6. PROVIDE 24" WIDE X 13" TALL LAMINATED PLASTIC SIGN WITH BLACK TEXT AND GRAPHIC ON WHITE BACKGROUND AS SHOWN. TEXT SHALL COMPLY WITH ADA SECTION 703.5. BRAILLE SHALL COMPLY WITH ADA SECTION 703.3. MOUNT SIGN IN COMPLIANCE WITH ADA SECTIONS 703.5.5 AND 703.5.6 SO BASELINE OF CHARACTERS IS A MINIMUM OF 40" ABOVE FINISHED FLOOR.
7. UM PROJECT MANAGER SHALL ARRANGE FOR ITSComm TO PROVIDE A DEDICATED TELEPHONE IN THE BUILDING'S FIRE COMMAND CENTER (IF FIRE COMMAND CENTER EXISTS). EACH AREA OF REFUGE TWO-WAY COMMUNICATION DEVICE SHALL BE PROGRAMMED BY ITSComm TO RING DIRECTLY TO THE BUILDING FIRE COMMAND CENTER PHONE. IF THE CALL IS NOT ANSWERED IN 3 RINGS, THE CALL SHALL AUTOMATICALLY BE TRANSFERRED TO THE U OF M DPSS COMMAND CENTER.
8. IF THE PROJECT DOES NOT INCLUDE A FIRE COMMAND CENTER, EACH AREA OF REFUGE TWO-WAY COMMUNICATION DEVICE SHALL BE PROGRAMMED TO RING DIRECTLY TO THE UM DPSS COMMAND CENTER.

AREA OF REFUGE TWO-WAY COMMUNICATION SYSTEM

NO SCALE

27200009.dgn

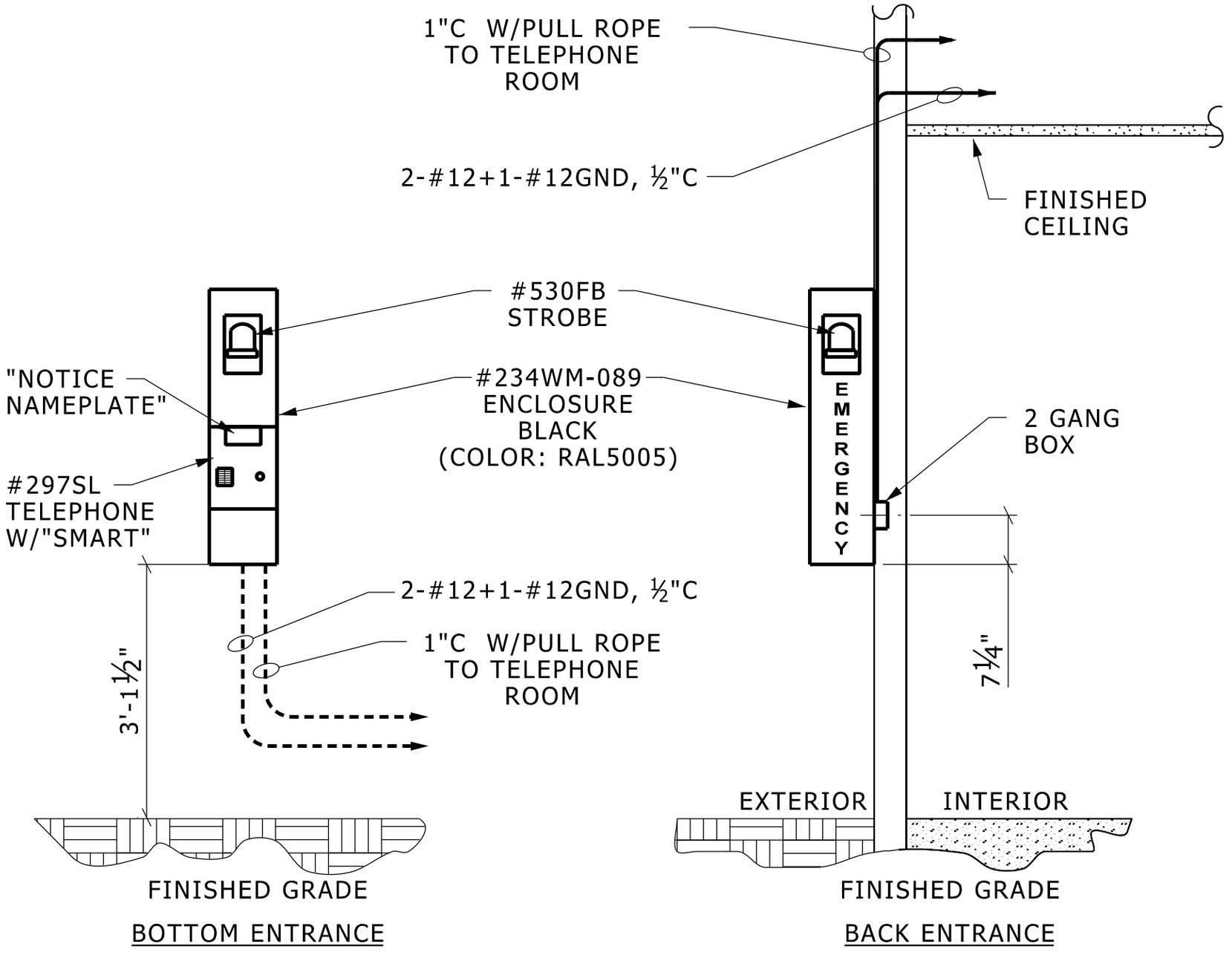

BOTTOM ENTRANCE

BACK ENTRANCE

SEE DETAIL #1675006 FOR WIRING

EMERGENCY TELEPHONE SURFACE MOUNTED TO BUILDING

NO SCALE

27200010.dgn

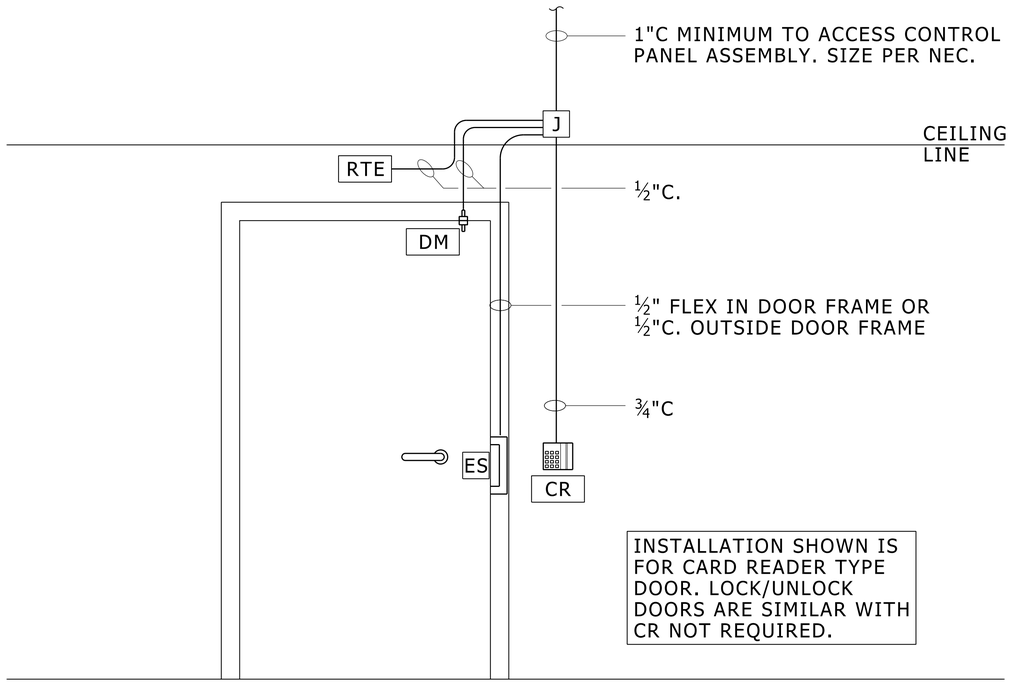

GENERAL NOTES

1. ALL RACEWAYS INCLUDING JUNCTION BOXES TO BE RECESSED UNLESS OTHERWISE NOTED.
2. DETERMINE EXACT RACEWAY ROUTING BASED ON FIELD CONDITIONS.
3. POWER FOR ELECTRIFIED DEVICES OBTAINED FROM POWER SUPPLIES AT ACCESS CONTROL PANEL ASSEMBLY UNLESS OTHERWISE NOTED.
4. PROVIDE WEATHER-PROOF (WP) JUNCTION BOXES IN EXTERIOR LOCATIONS
5. WIRE SIZES SHALL BE IN ACCORDANCE WITH MANUFACTURERS INSTRUCTIONS.

LEGEND

CR	CARD READER. MOUNT ON JUNCTION BOX ON UNSECURED SIDE OF DOOR.
DM	DOOR MONITOR CONTACT
ES	ELECTRIC STRIKE
J	JIC-JUNCTION BOX, 6x6 MINIMUM. MOUNT ABOVE DROPPED CEILING ON SECURED SIDE OF DOOR. IF CEILING IS NOT REMOVABLE, PROVIDE ACCESS PANEL FOR MAINTENANCE.
RTE	REQUEST TO EXIT. MOUNT ON SECURED SIDE OF DOOR ("INSIDE").

PROPERTY OF THE UNIVERSITY OF MICHIGAN.
NOT TO BE DISCLOSED TO PERSONS OUTSIDE OF THIS PROJECT

TYP. RACEWAY INSTALLATION AT SINGLE DOOR WITH ELECTRIC STRIKE

NO SCALE

28130001.dgn

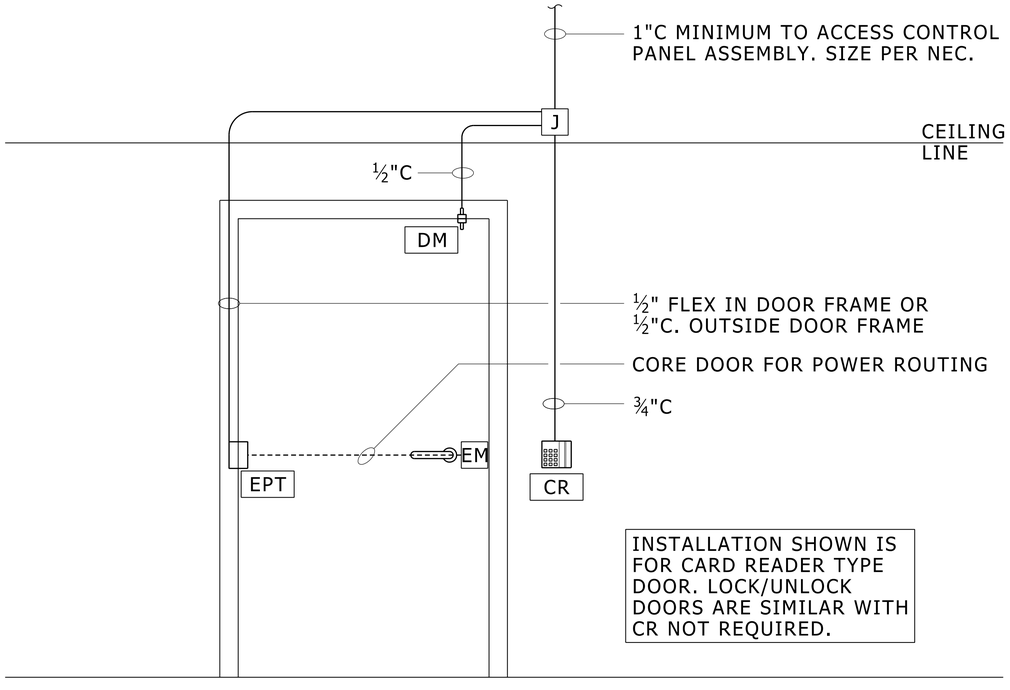

GENERAL NOTES

1. ALL RACEWAYS INCLUDING JUNCTION BOXES TO BE RECESSED UNLESS OTHERWISE NOTED.
2. DETERMINE EXACT RACEWAY ROUTING BASED ON FIELD CONDITIONS.
3. POWER FOR ELECTRIFIED DEVICES OBTAINED FROM POWER SUPPLIES AT ACCESS CONTROL PANEL ASSEMBLY UNLESS OTHERWISE NOTED.
4. PROVIDE WEATHER-PROOF (WP) JUNCTION BOXES IN EXTERIOR LOCATIONS
5. WIRE SIZES SHALL BE IN ACCORDANCE WITH MANUFACTURERS INSTRUCTIONS.

LEGEND

CR	CARD READER. MOUNT ON JUNCTION BOX ON UNSECURED SIDE OF DOOR.
DM	DOOR MONITOR CONTACT
EM	ELECTRIC MORTISE LOCKSET WITH REQUEST TO EXIT SWITCH
EPT	ELECTRICAL POWER TRANSFER
J	JIC-JUNCTION BOX, 6x6 MINIMUM. MOUNT ABOVE DROPPED CEILING ON SECURED SIDE OF DOOR. IF CEILING IS NOT REMOVABLE, PROVIDE ACCESS PANEL FOR MAINTENANCE.

PROPERTY OF THE UNIVERSITY OF MICHIGAN.
NOT TO BE DISCLOSED TO PERSONS OUTSIDE OF THIS PROJECT

TYP. RACEWAY INSTALLATION AT SINGLE DOOR WITH ELECTRIC MORTISE DEVICE

NO SCALE

28130002.dgn

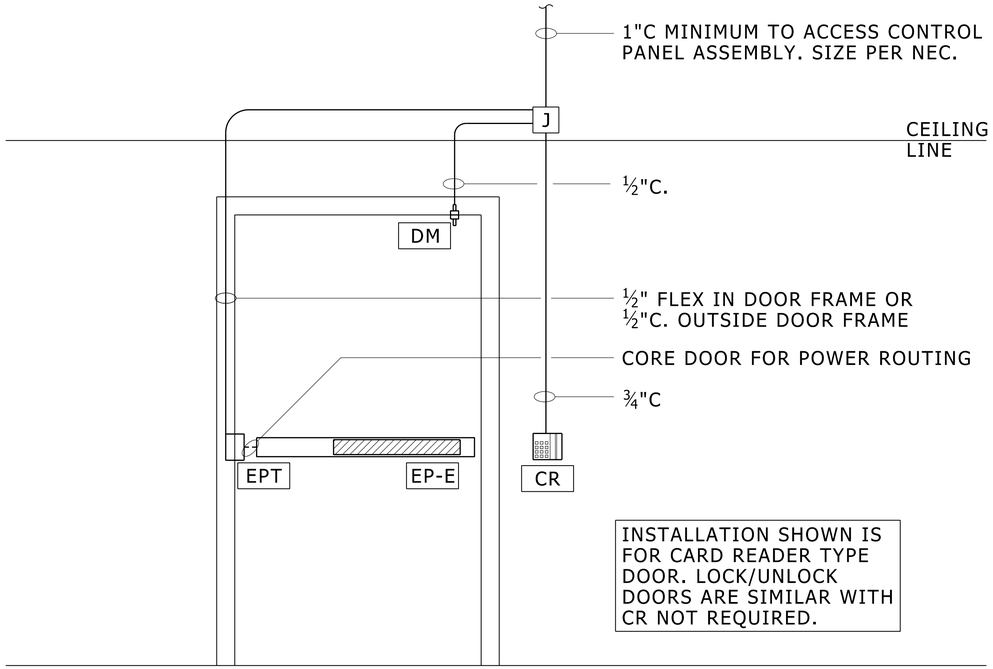

GENERAL NOTES

1. ALL RACEWAYS INCLUDING JUNCTION BOXES TO BE RECESSED UNLESS OTHERWISE NOTED.
2. DETERMINE EXACT RACEWAY ROUTING BASED ON FIELD CONDITIONS.
3. POWER FOR ELECTRIFIED DEVICES OBTAINED FROM POWER SUPPLIES AT ACCESS CONTROL PANEL ASSEMBLY UNLESS OTHERWISE NOTED.
4. PROVIDE WEATHER-PROOF (WP) JUNCTION BOXES IN EXTERIOR LOCATIONS
5. WIRE SIZES SHALL BE IN ACCORDANCE WITH MANUFACTURERS INSTRUCTIONS.

LEGEND

CR	CARD READER. MOUNT ON JUNCTION BOX ON UNSECURED SIDE OF DOOR.
DM	DOOR MONITOR CONTACT
EP-E	ELECTRIC PANIC HARDWARE WITH ELECTRIFIED TRIM & REQUEST TO EXIT SWITCH.
EPT	ELECTRIC POWER TRANSFER, HEAVY DUTY MORTISE TYPE.
J	JIC-JUNCTION BOX, 6x6 MINIMUM. MOUNT ABOVE DROPPED CEILING ON SECURED SIDE OF DOOR. IF CEILING IS NOT REMOVABLE, PROVIDE ACCESS PANEL FOR MAINTENANCE.

PROPERTY OF THE UNIVERSITY OF MICHIGAN.
NOT TO BE DISCLOSED TO PERSONS OUTSIDE OF THIS PROJECT

TYP. RACEWAY INSTALLATION AT SINGLE DOOR WITH E-TYPE ELECTRIC PANIC DEVICE

NO SCALE

28130003.dgn

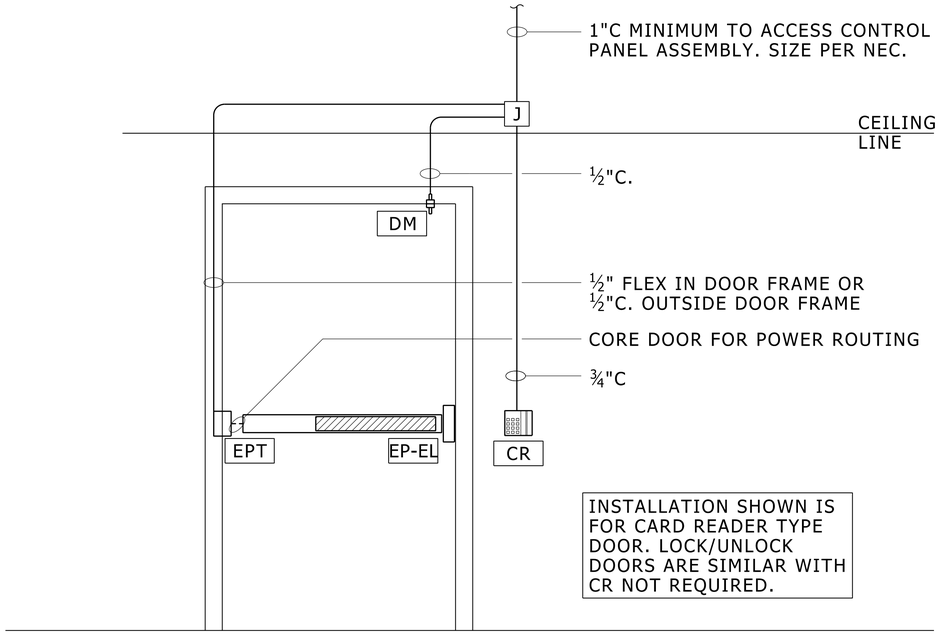

GENERAL NOTES

1. ALL RACEWAYS INCLUDING JUNCTION BOXES TO BE RECESSED UNLESS OTHERWISE NOTED.
2. DETERMINE EXACT RACEWAY ROUTING BASED ON FIELD CONDITIONS.
3. POWER FOR ELECTRIFIED DEVICES OBTAINED FROM POWER SUPPLIES AT ACCESS CONTROL PANEL ASSEMBLY UNLESS OTHERWISE NOTED.
4. PROVIDE WEATHER-PROOF (WP) JUNCTION BOXES IN EXTERIOR LOCATIONS
5. WIRE SIZES SHALL BE IN ACCORDANCE WITH MANUFACTURERS INSTRUCTIONS.
6. POWER SUPPLY ELECTRIC PANIC HARDWARE SHALL BE LABELED WITH PANEL AND CIRCUIT FEEDING IT. LABEL SHALL BE NYLON TAPE TYPE.

LEGEND

CR	CARD READER. MOUNT ON JUNCTION BOX ON UNSECURED SIDE OF DOOR.
DM	DOOR MONITOR CONTACT
EP-EL	ELECTRIC PANIC HARDWARE WITH ELECTRIFIED LATCH RETRACTION & REQUEST TO EXIT SWITCH.
EPT	ELECTRIC POWER TRANSFER, HEAVY DUTY MORTISE TYPE.
J	JIC-JUNCTION BOX, 6x6 MINIMUM. MOUNT ABOVE DROPPED CEILING ON SECURED SIDE OF DOOR. IF CEILING IS NOT REMOVABLE, PROVIDE ACCESS PANEL FOR MAINTENANCE.

PROPERTY OF THE UNIVERSITY OF MICHIGAN.
NOT TO BE DISCLOSED TO PERSONS OUTSIDE OF THIS PROJECT

TYP. RACEWAY INSTALLATION AT SINGLE DOOR WITH EL-TYPE ELECTRIC PANIC DEVICE

NO SCALE

28130004.dgn

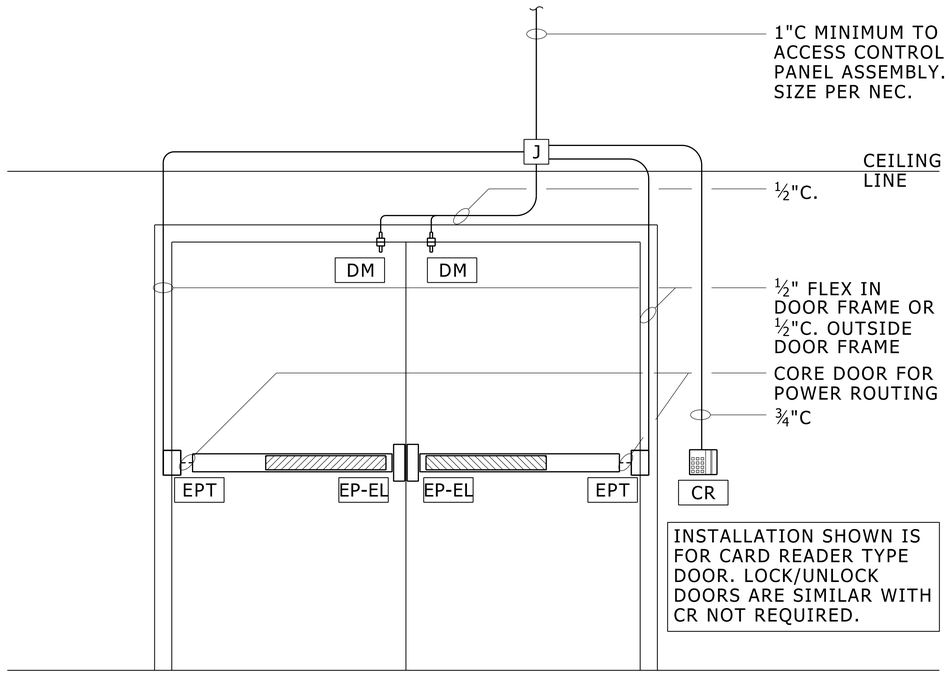

GENERAL NOTES

1. ALL RACEWAYS INCLUDING JUNCTION BOXES TO BE RECESSED UNLESS OTHERWISE NOTED.
2. DETERMINE EXACT RACEWAY ROUTING BASED ON FIELD CONDITIONS.
3. POWER FOR ELECTRIFIED DEVICES OBTAINED FROM POWER SUPPLIES AT ACCESS CONTROL PANEL ASSEMBLY UNLESS OTHERWISE NOTED.
4. PROVIDE WEATHER-PROOF (WP) JUNCTION BOXES IN EXTERIOR LOCATIONS
5. WIRE SIZES SHALL BE IN ACCORDANCE WITH MANUFACTURERS INSTRUCTIONS.
6. POWER SUPPLY ELECTRIC PANIC HARDWARE SHALL BE LABELED WITH PANEL AND CIRCUIT FEEDING IT. LABEL SHALL BE NYLON TAPE TYPE.

LEGEND

CR	CARD READER. MOUNT ON JUNCTION BOX ON UNSECURED SIDE OF DOOR.
DM	DOOR MONITOR CONTACT
EP-EL	ELECTRIC PANIC HARDWARE WITH ELECTRIFIED LATCH RETRACTION & REQUEST TO EXIT SWITCH.
EPT	ELECTRIC POWER TRANSFER, HEAVY DUTY MORTISE TYPE.
J	JIC-JUNCTION BOX, 6x6 MINIMUM. MOUNT ABOVE DROPPED CEILING ON SECURED SIDE OF DOOR. IF CEILING IS NOT REMOVABLE, PROVIDE ACCESS PANEL FOR MAINTENANCE.

PROPERTY OF THE UNIVERSITY OF MICHIGAN.
NOT TO BE DISCLOSED TO PERSONS OUTSIDE OF THIS PROJECT

TYPICAL RACEWAY INSTALLATION AT DOUBLE DOOR WITH EL-TYPE ELECTRIC PANIC DEVICE

NO SCALE

28130006.dgn

PROPERTY OF THE UNIVERSITY OF MICHIGAN.
NOT TO BE DISCLOSED TO PERSONS OUTSIDE OF THIS PROJECT

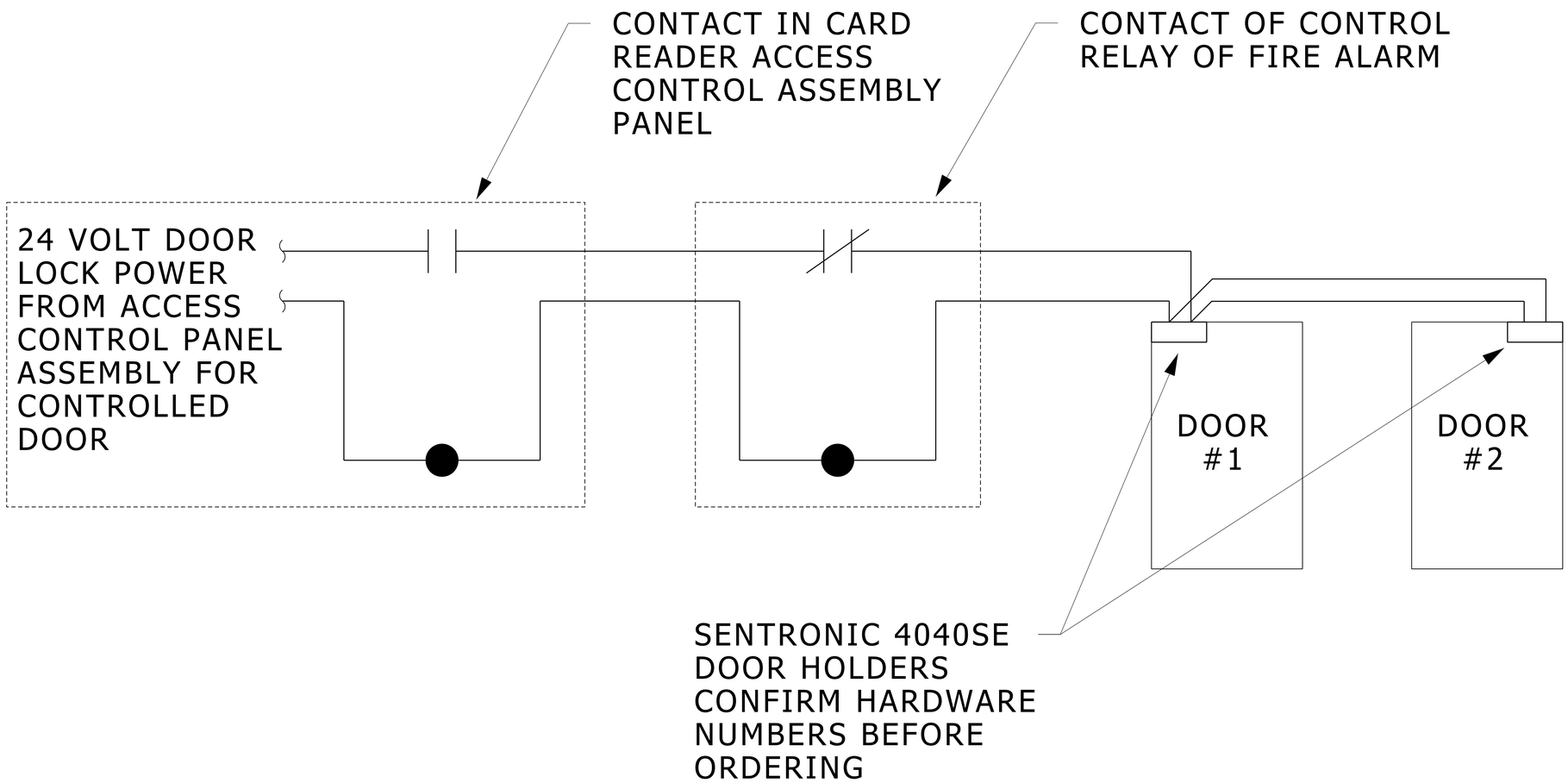

NOTE:
POWER NEEDED TO HOLD DOORS OPEN.

CONTROL WIRING FOR DOOR-HOLD-OPENS

NO SCALE

28130007.dgn

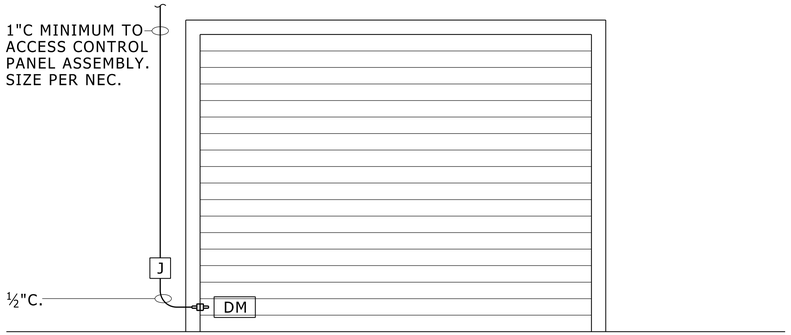

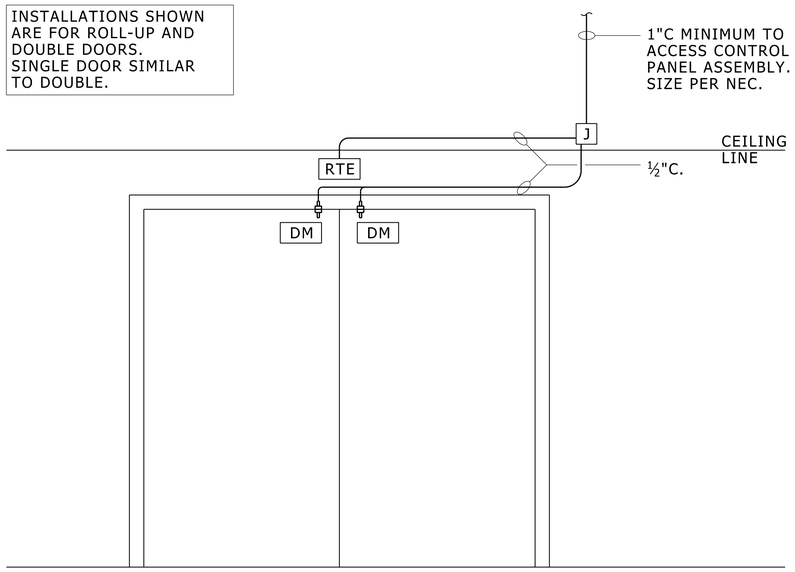

GENERAL NOTES

1. ALL RACEWAYS INCLUDING JUNCTION BOXES TO BE RECESSED UNLESS OTHERWISE NOTED.
2. DETERMINE EXACT RACEWAY ROUTING BASED ON FIELD CONDITIONS.
3. POWER FOR ELECTRIFIED DEVICES OBTAINED FROM POWER SUPPLIES AT ACCESS CONTROL PANEL ASSEMBLY UNLESS OTHERWISE NOTED.
4. PROVIDE WEATHER-PROOF (WP) JUNCTION BOXES IN EXTERIOR LOCATIONS
5. WIRE SIZES SHALL BE IN ACCORDANCE WITH MANUFACTURERS INSTRUCTIONS.

LEGEND

DM	DOOR MONITOR CONTACT
J	JIC-JUNCTION BOX, 6x6 MINIMUM. MOUNT ABOVE DROPPED CEILING ON SECURED SIDE OF DOOR. IF CEILING IS NOT REMOVABLE, PROVIDE ACCESS PANEL FOR MAINTENANCE.
RTE	REQUEST TO EXIT. MOUNT ON SECURED SIDE OF DOOR ("INSIDE").

PROPERTY OF THE UNIVERSITY OF MICHIGAN.
NOT TO BE DISCLOSED TO PERSONS OUTSIDE OF THIS PROJECT

TYPICAL RACEWAY INSTALLATION AT DOORS WITH MONITORING SENSOR

NO SCALE

28130008.dgn

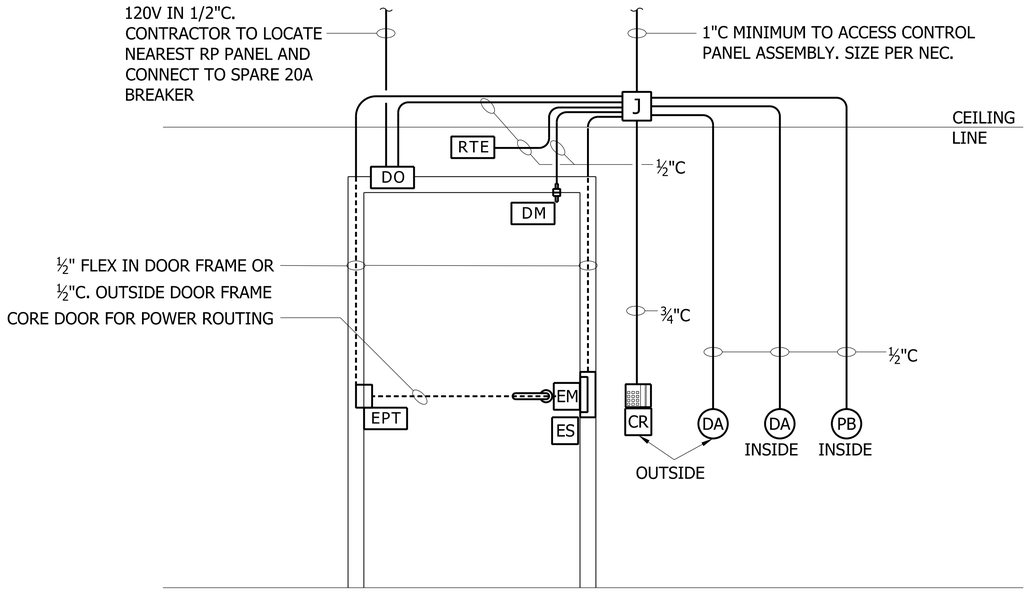

GENERAL NOTES

1. ALL RACEWAYS INCLUDING JUNCTION BOXES TO BE RECESSED UNLESS OTHERWISE NOTED.
2. DETERMINE EXACT RACEWAY ROUTING BASED ON FIELD CONDITIONS.
3. POWER FOR ELECTRIFIED DEVICES OBTAINED FROM POWER SUPPLIES AT ACCESS CONTROL PANEL ASSEMBLY UNLESS OTHERWISE NOTED.
4. PROVIDE WEATHER-PROOF (WP) JUNCTION BOXES IN EXTERIOR LOCATIONS
5. WIRE SIZES SHALL BE IN ACCORDANCE WITH MANUFACTURERS INSTRUCTIONS.

LEGEND

CR	CARD READER. MOUNT ON JUNCTION BOX ON UNSECURED SIDE OF DOOR.
DA	DOOR ACTUATOR
DM	DOOR MONITOR CONTACT
EM	ELECTRIC MORTISE LOCKSET WITH REQUEST TO EXIT SWITCH
EPT	ELECTRICAL POWER TRANSFER
J	JIC-JUNCTION BOX, 6x6 MINIMUM. MOUNT ABOVE DROPPED CEILING ON SECURED SIDE OF DOOR. IF CEILING IS NOT REMOVABLE, PROVIDE ACCESS PANEL FOR MAINTENANCE.
DO	POWER DOOR OPERATOR
PB	PUSH BUTTON
ES	ELECTRIC DOOR STRIKE

PROPERTY OF THE UNIVERSITY OF MICHIGAN.
NOT TO BE DISCLOSED TO PERSONS OUTSIDE OF THIS PROJECT

TYP. RACEWAY INSTALLATION AT FIRE RATED SINGLE DOOR WITH ELECTRIC MORTISE DEVICE, ELECTRIC STRIKE AND DOOR OPERATOR

NO SCALE 28130009.dgn

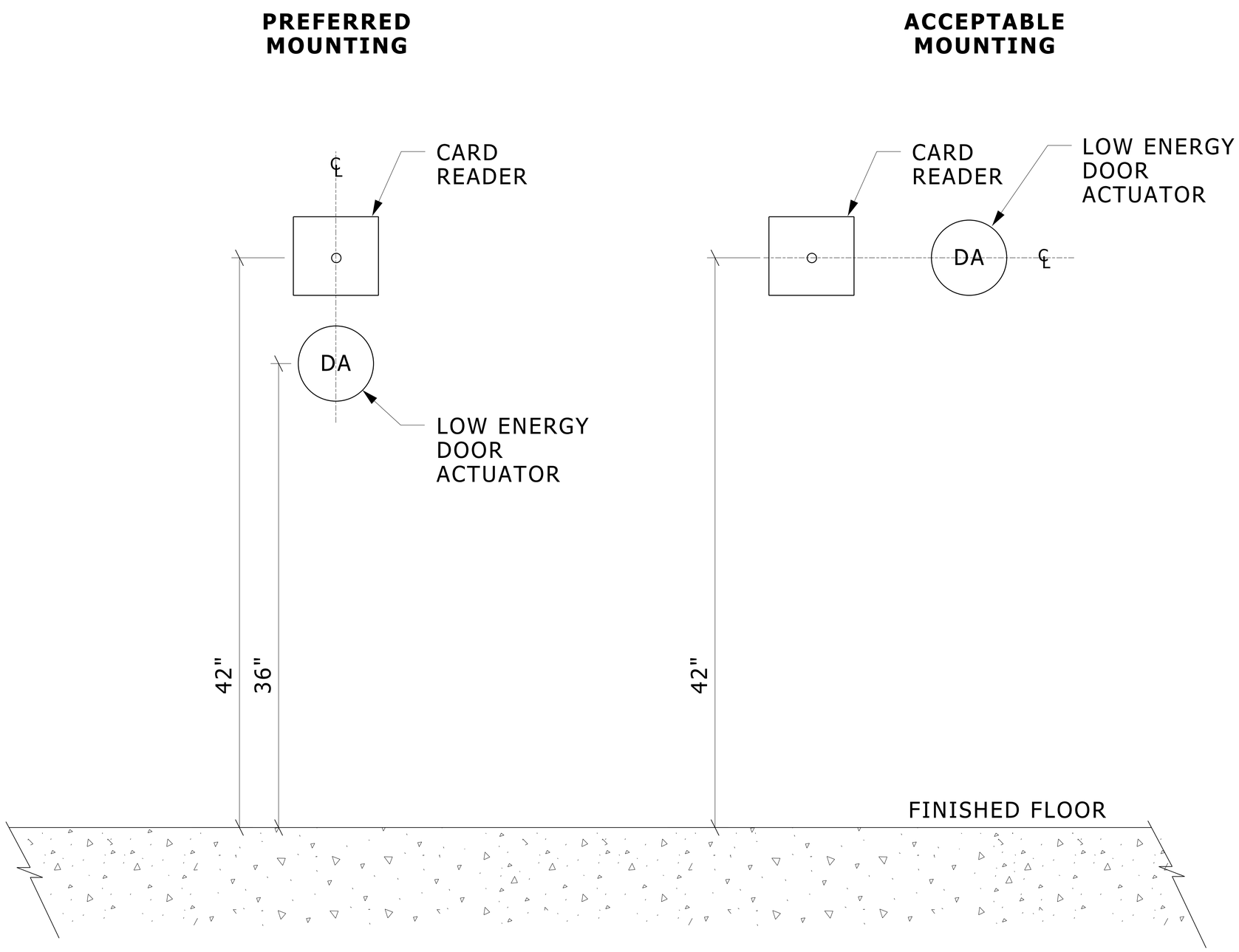

TYPICAL CARD READER AND DOOR ACTUATOR MOUNTING DETAIL

NO SCALE

28130010.dgn

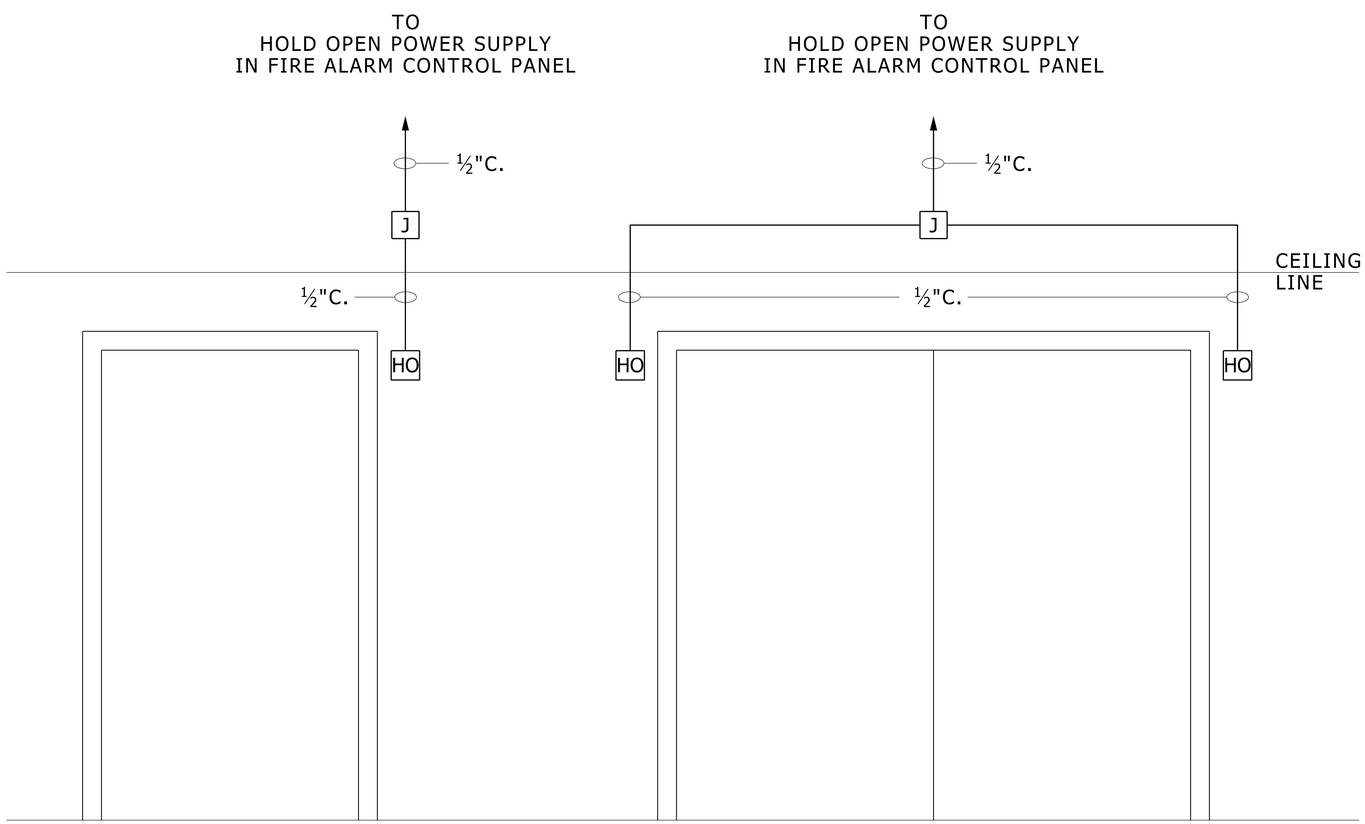

SINGLE DOOR **DOUBLE DOOR**

GENERAL NOTES

1. DOORS HELD OPEN BY ELECTRIFIED HOLD OPEN DEVICES.
2. UPON ACTIVATION OF FIRE ALARM, POWER TO HOLD OPEN MAGNET IS CUT AND DOORS ARE ALLOWED TO CLOSE AND LATCH. EXIT IS ALWAYS ALLOWED.
3. FIRE ALARM CONTROL PANEL POWER SUPPLY FOR HOLD OPEN DEVICES IS NOT BATTERY BACKED.
4. WIRING TO HOLD OPEN DEVICES SHALL BE #12 AWG.

LEGEND

HO	DOOR HOLD OPEN DEVICE
J	JUNCTION BOX

TYPICAL RACEWAY INSTALLATION AT DOORS HOLD OPEN DEVICES

NO SCALE 28130011.dgn

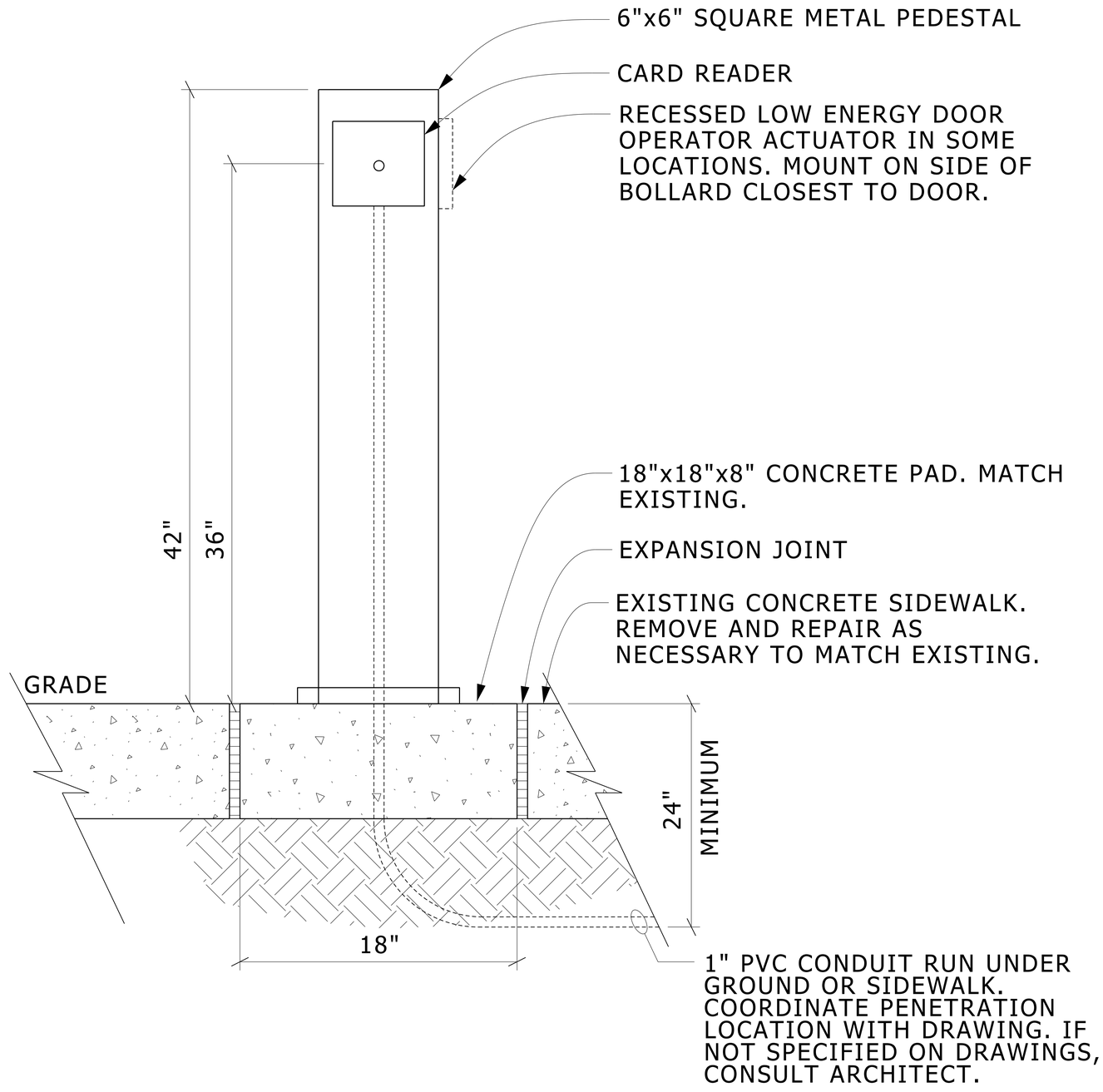

PROPERTY OF THE UNIVERSITY OF MICHIGAN.
NOT TO BE DISCLOSED TO PERSONS OUTSIDE OF THIS PROJECT

TYPICAL CARD READER PEDESTAL DETAIL

NO SCALE

28130012.dgn

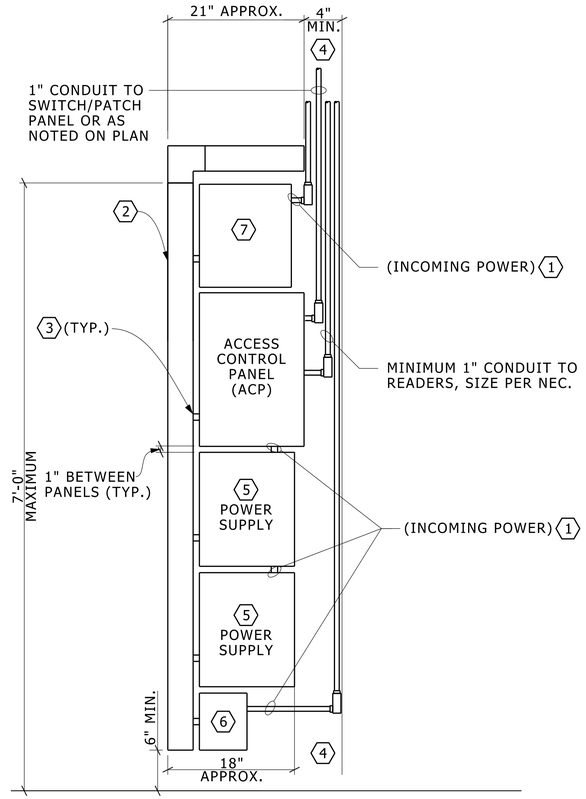

GENERAL NOTES

1. RACEWAYS TO MOST CARD READERS, ETC., NOT SHOWN HERE, TYPICALLY MINIMUM 1" (AS NOTED ON ELEVATION ABOVE) TO EACH CARD READER LOCATION.
2. ALTERNATE MOUNTING CONFIGURATIONS MAY BE REQUIRED FOR PANEL INSTALLATIONS IN EXISTING CLOSETS. SUBMITTALS REQUIRED.
3. MOUNT PANEL ASSEMBLY TO ¾" PLYWOOD BACKING BY ARCHITECTURAL TRADES.
4. REFER TO SPECIFICATION SECTION 281300 ACCESS CONTROL AND MONITORING SYSTEM FOR DETAILED INFORMATION REGARDING ASSEMBLY COMPONENTS.

REFERENCE NOTES

1. PROVIDE MINIMUM OF (2) DEDICATED 120V, 20A CIRCUITS TO POWER SUPPLIES FOR ACCESS CONTROL PANELS AND LOCKS. INSTALL LOCKS ON BREAKERS. PROVIDE ADDITIONAL CIRCUITS AS MAY BE REQUIRED FROM SYSTEM REQUIREMENTS.
2. 4"x4" METAL LAY-IN NEMA 1 TYPE HINGE COVER WIREWAY FOR LOW VOLTAGE, INTER-PANEL WIRING. PROVIDE IN LIGHT GRAY. HOFFMAN F44G SERIES.
3. INSTALL BUSHINGS IN PANEL SIDES AS NEEDED TO ALLOW WIRING TO REACH WIREWAY.
4. CLEAR SPACE FOR CONDUIT EXITS. CONDUITS MAY EXIT ABOVE OR BELOW.
5. PROVIDE ONE POWER SUPPLY WITH BATTERY BACK-UP SIZED PER SPECIFICATION.
6. PROVIDE POWER SUPPLY FOR READER HEAT.
7. PROVIDE POWER SUPPLY FOR ACCESS CONTROL PANEL.

PROPERTY OF THE UNIVERSITY OF MICHIGAN.
NOT TO BE DISCLOSED TO PERSONS OUTSIDE OF THIS PROJECT

TYP. INSTALLATION FOR CARD READER PANEL IN BUILDING

NO SCALE

28130013.dgn

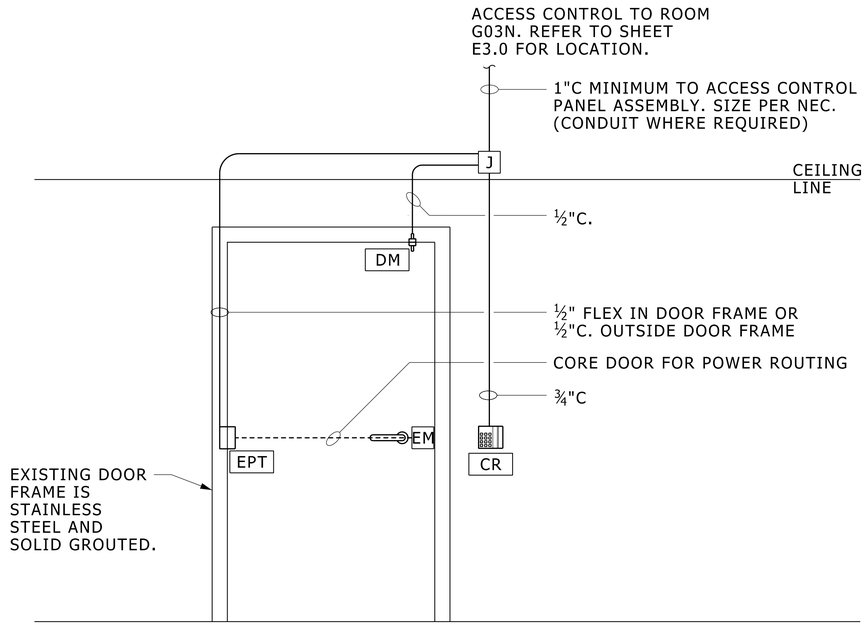

NOTE: NEW DOOR CONNECT TO EXISTING LENEL ACCESS CONTROL SYSTEM.
ELECTRICAL CONTRACTOR SHALL PROVIDE COMPOSITE CABLE FROM ACCESS CONTROL PANEL TO EACH DOOR. PROVIDE CONDUIT AND/OR CABLE SUPPORT AS REQUIRED PER NEC. RUN CABLES IN UNBROKEN LENGHTS FROM CONTROL PANEL TO EACH DOOR. COORDINATE SPECIFIC CABLE REQUIREMENTS WITH SECURITY CONTRACTOR. SECURITY CONTRACTOR SHALL PROVIDE FINAL CONNECTIONS, PROGRAMMING AND CONTROL PANEL MODIFICATION.
APPROVED SECURITY CONTRACTOR: D/A CENTRAL, 13155 CLOVERDALE, OAK PARK MI. 48237
(248) 399-0600 TERRY WOYCIK x116

GENERAL NOTES

1. ALL RACEWAYS INCLUDING JUNCTION BOXES TO BE RECESSED UNLESS OTHERWISE NOTED.
2. DETERMINE EXACT RACEWAY ROUTING BASED ON FIELD CONDITIONS.
3. POWER FOR ELECTRIFIED DEVICES OBTAINED FROM POWER SUPPLIES AT ACCESS CONTROL PANEL ASSEMBLY UNLESS OTHERWISE NOTED.
4. PROVIDE WEATHER-PROOF (WP) JUNCTION BOXES
5. WIRE SIZES SHALL BE IN ACCORDANCE WITH MANUFACTURERS INSTRUCTIONS.
6. SEE 03710 FOR SEQUENCE OF OPERATIONS.

LEGEND

CR	CARD READER. MOUNT ON JUNCTION BOX ON UNSECURED SIDE OF DOOR. (CARD READER OWNER FURNISHED, CONTRACTOR INSTALLED)
DM	DOOR MONITOR CONTACT
EM	ELECTRIC MORTISE LOCKSET WITH REQUEST TO EXIT SWITCH
EPT	ELECTRICAL POWER TRANSFER
J	JIC-JUNCTION BOX, 6x6 MINIMUM. MOUNT ABOVE DROPPED CEILING ON SECURED SIDE OF DOOR. IF CEILING IS NOT REMOVABLE, PROVIDE ACCESS PANEL FOR MAINTENANCE.

PROPERTY OF THE UNIVERSITY OF MICHIGAN.
NOT TO BE DISCLOSED TO PERSONS OUTSIDE OF THIS PROJECT

N.C.R.C - TYP. RACEWAY INSTALLATION AT SINGLE DOOR WITH ELECTRIC MORTISE DEVICE

NO SCALE 28130014.dgn

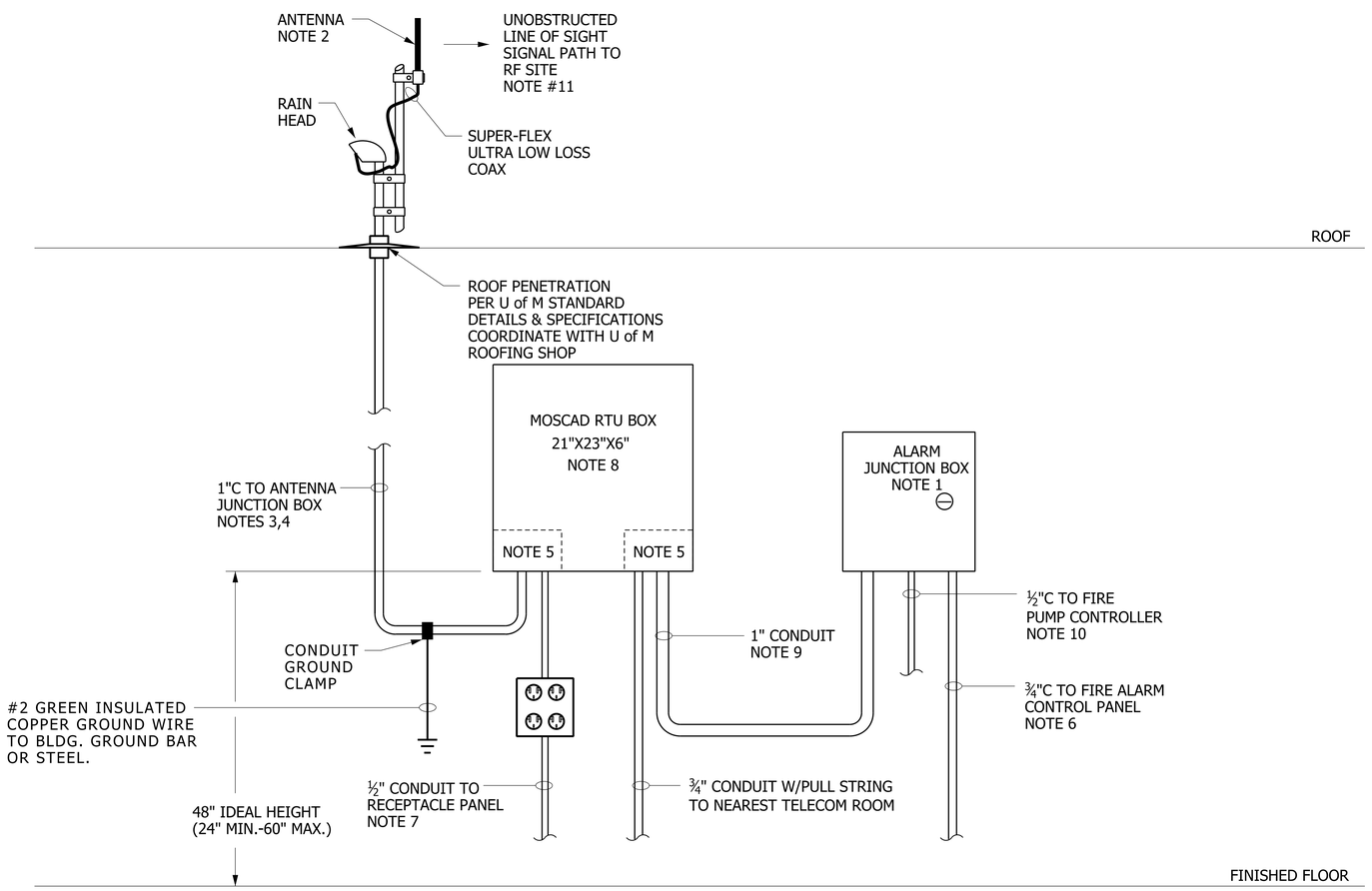

NOTES:

1. PROVIDE ALARM JUNCTION BOX, HOFFMAN NO. A-14N124 WITH NO. A-14N2LP PANEL, AND STANDARD SLOTTED FLUSH LATCH.
2. FINAL LOCATION OF ANTENNA TO BE SELECTED BY U OF M RADIO SHOP.
3. ANTENNA CONDUIT SHALL HAVE A MAXIMUM OF TWO 90 DEGREE BENDS. WITH A MINIMUM BEND RADIUS OF 6". IF THIS IS NOT POSSIBLE, INSTALL 6"X6"X4" JB'S AT BENDS TO MEET THIS REQUIREMENT. COAX RUN FROM RTU TO ANTENNA SHALL NOT EXCEED 50'.
4. PROVIDE A GREENLEE CONDUIT MEASURING TAPE: PART # 435 FROM MOSCAD RTU BOX TO ANTENNA.
5. ALL CONDUITS SHALL ENTER RTU BOX WITHIN 6" OF CORNERS TO PREVENT INTERFERENCE WITH RTU ELECTRONICS INSTALLATION.
6. PROVIDE 12 CONDUCTOR (MINIMUM) CABLE COMPATIBLE WITH FIRE ALARM SYSTEM INSTALLED IN BUILDING. CONNECT ONE PAIR OF WIRES TO "BUILDING FIRE ALARM" CONTACTS IN THE FIRE ALARM CONTROL PANEL, ONE PAIR TO "FIRE ALARM SUPERVISORY", ONE PAIR TO "FIRE ALARM SYSTEM TROUBLE" AND ONE PAIR TO"FIRE ALARM SYSTEM MAINTENANCE ALERT". REMAINING CONDUCTORS ARE SPARES. CONTACTS IN THE FIRE ALARM CONTROL PANEL SHALL BE NORMALLY CLOSED SO CIRCUITS CAN BE SUPERVISED.
7. PROVIDE DEDICATED, LOCKING 20A, 1-P CIRCUIT BREAKER & CIRCUIT W/INSULATED GROUND WIRE TO MOSCAD. PROVIDE QUAD RECEPTACLES ON DEDICATED CIRCUIT. INSTALL LOCK ON BRANCH CIRCUIT BREAKER SERVING FIRE ALARM PANEL.
8. U of M RADIO SHOP PROVIDES MOSCAD RTU BOX, ELECTRONICS IN MOSCAD RTU AND ALARM JUNCTION BOXES, ANTENNA CABLE, ANTENNA, FINAL MOSCAD RTU CONNECTIONS AND PROGRAMMING, FINAL CONNECTIONS IN ALARM JUNCTION BOX AND ANTENNA INSTALLATION & CONNECTIONS.
9. PROVIDE 22AWG, 25 TWISTED PAIR JACKETED CABLE.
10. PROVIDE 6 CONDUCTOR (MINIMUM) CABLE. CONNECT ONE PAIR OF WIRES TO "FIRE PUMP RUNNING" CONTACTS IN FIRE PUMP CONTROLLER AND ONE PAIR TO "FIRE PUMP TROUBLE". REMAINING CONDUCTORS ARE SPARES. CONTACTS IN FIRE PUMP CONTROLLER SHALL BE NORMALLY CLOSED.
11. RF SITES LOCATED AT DENNISON, WOLVERINE TOWER AND NC SERVICE BUILDING #1.

MOSCAD RTU ELECTRICAL DETAIL

NO SCALE 28160015.dgn

PROPERTY OF THE UNIVERSITY OF MICHIGAN.
NOT TO BE DISCLOSED TO PERSONS OUTSIDE OF THIS PROJECT.

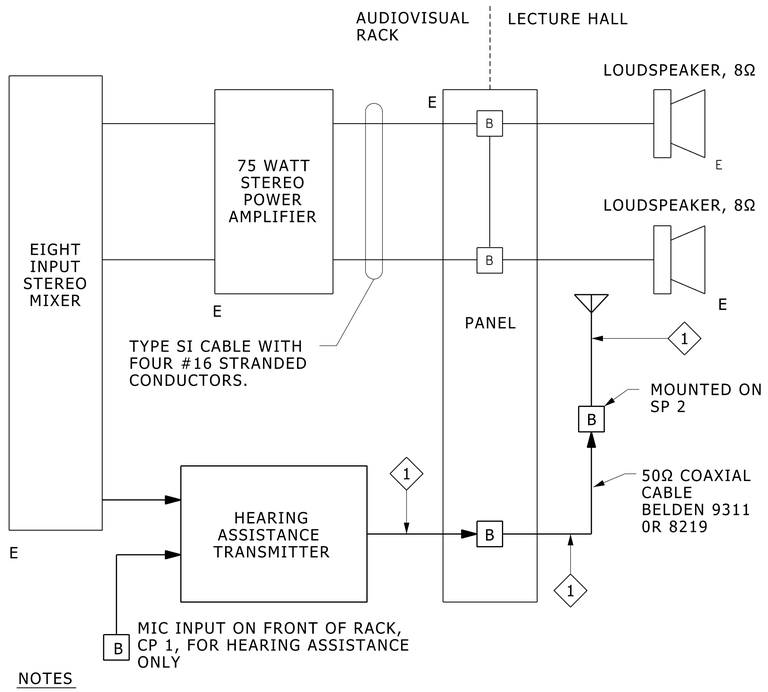

NOTES

1. THE FOLLOWING IS A MATERIAL LIST FOR THE HEARING ASSISTANCE SYSTEM.
   - PHONIC EAR MODEL PE-550T FM TRANSMITTER. TRANSMITTERS SHALL BE TUNABLE FOR CHANNELS 33, 35, 36, 37, & 38.
   - PHONIC EAR MODEL AT-209A PLUG IN POWER SUPPLY UNITS.
   - PHONIC EAR MODEL AT-565 ANTENNA WITH PHONIC EAR MODEL AT-567 GROUNDING PLANE.
   - 100 FOOT SECTIONS OF (XLR) CABLE, WITH CONNECTORS, TO GO BETWEEN THE TRANSMITTER AND ANTENNA.
   - PHONIC EAR MODEL AT-575 RACK MOUNTING KITS.
   - PHONIC EAR PE-350 R SIX CHANNEL FM RECEIVERS TUNABLE FOR CHANNELS 33, 34, 35, 36, 37, & 38.
   - PHONIC EAR MODEL AT-541 WALKMAN STYLE HEADPHONE.
   - PHONIC EAR MODEL AT-538M MONAURAL EARBUD UNITS.
   - PHONIC EAR MODEL AT-538S BINAURAL EARBUD UNITS.
   - PHONIC EAR MODEL AT-163-B TELELOOP UNITS WITH PHONIC EAR MODEL AT-1543 CONNECTORS.
2. THE ADA REQUIRES THE NUMBER OF RECEIVERS TO BE NO LESS THAN 4% OF THE NUMBER OF SEATS, AND IN NO CASE LESS THAN TWO RECEIVERS. SO A 100 SEAT ROOM WILL REQUIRE 4 RECEIVERS.

B	PANEL MOUNTING BNC-BNC FEED THROUGH.
J	PANEL MOUNTING ¼" PHONE JACK.
M	PANEL MOUNTING MICROPHONE JACK.
1	SPECIAL "TSC" THREADED COAXIAL CONNECTOR. SEE "WIRING DETAIL HEARING ASSISTANCE ANTENNA"

AUDIO SYSTEM BLOCK DIAGRAM

NO SCALE

28160016.dgn

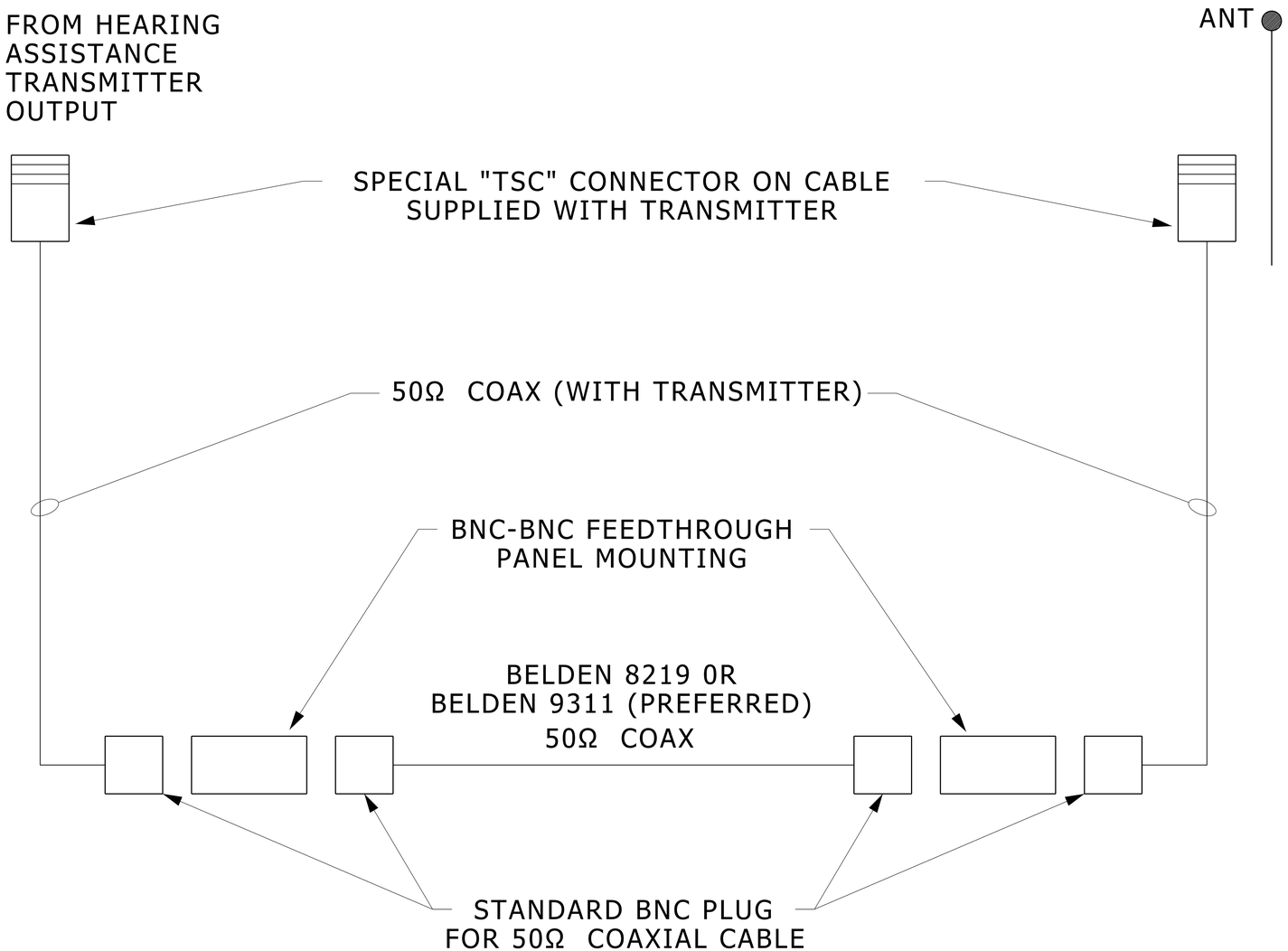

WIRING DETAIL
HEARING ASSISTANCE ANTENNA

NO SCALE

28160017.dgn

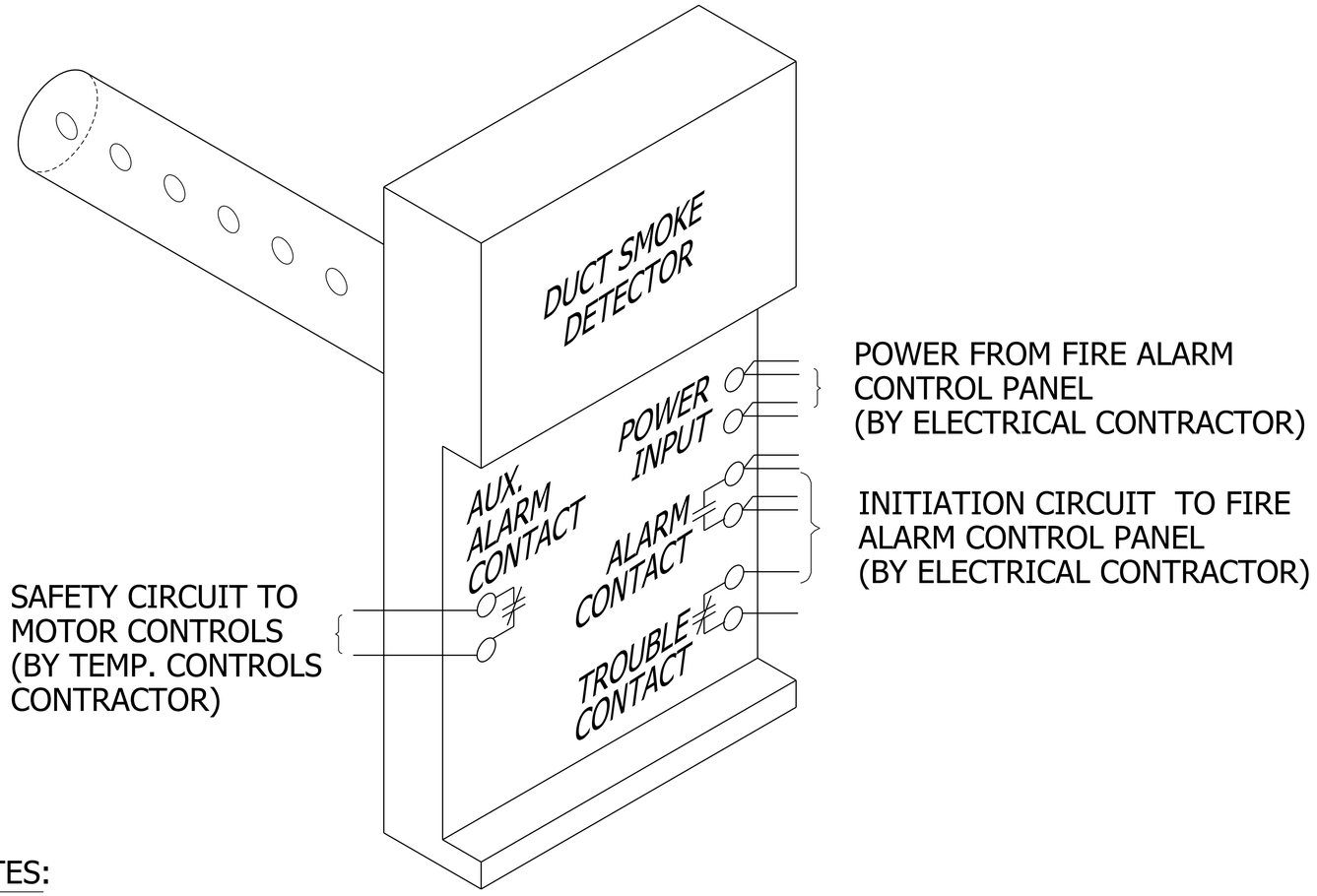

NOTES:

1. DETECTOR SHALL BE FROM SAME MANUFACTURER AS THE FIRE ALARM SYSTEM, OR SHALL MATCH THE OTHER DUCT SMOKE DETECTORS IN THE FIRE ALARM SYSTEM.
2. DETECTOR SHALL BE WIRED TO ITS OWN ZONE, OR SHALL BE ASSIGNED ITS OWN ADDRESS IN AN ADDRESSABLE FIRE ALARM SYSTEM.
3. DETECTOR SHALL BE RESETTABLE FROM THE FIRE ALARM CONTROL PANEL.
4. FIRE ALARM SYSTEM ANNUNCIATOR AND ZONE/ADDRESS LIST SHALL BE UPDATED ACCORDINGLY.
5. DETECTOR SHALL BE FURNISHED BY ELECTRICAL CONTRACTOR AND INSTALLED BY TEMPERATURE CONTROLS CONTRACTOR. CONDUIT AND WIRING SHALL BE PROVIDED AS SHOWN.

DUCT SMOKE DETECTOR INSTALLATION

NO SCALE

28310001.dgn

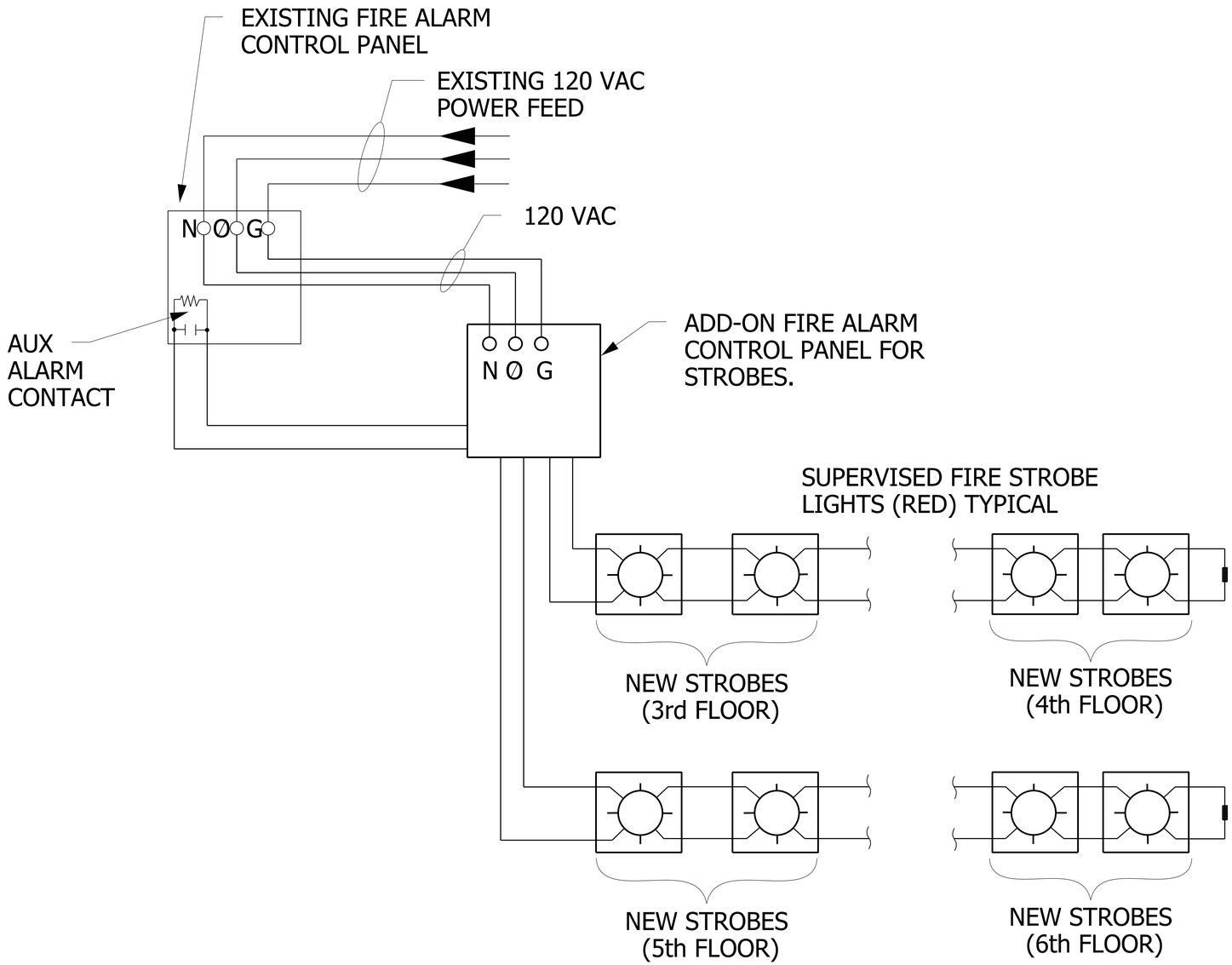

WIRING DIAGRAM
FOR HEARING IMPAIRED STROBE (DETAIL #3)

NO SCALE

28310004.dgn

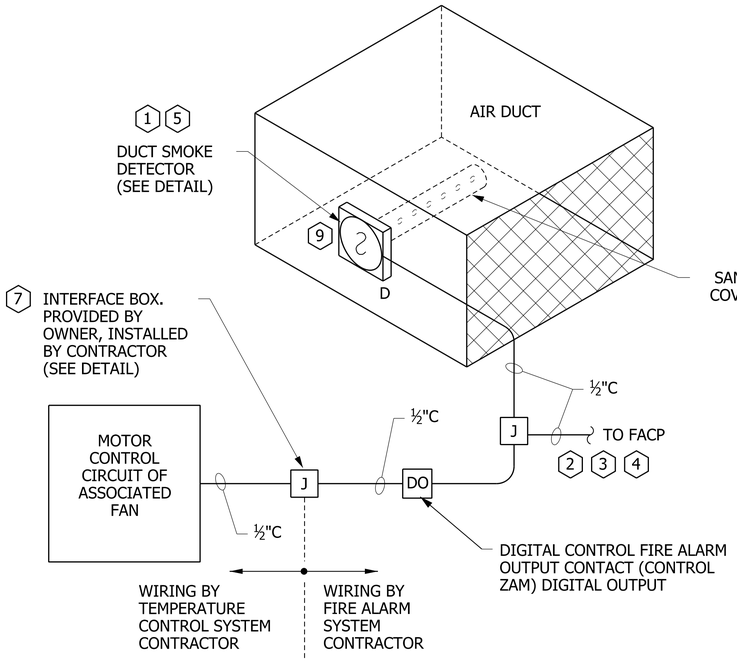

INTERFACE CIRCUIT LAYOUT

NO SCALE

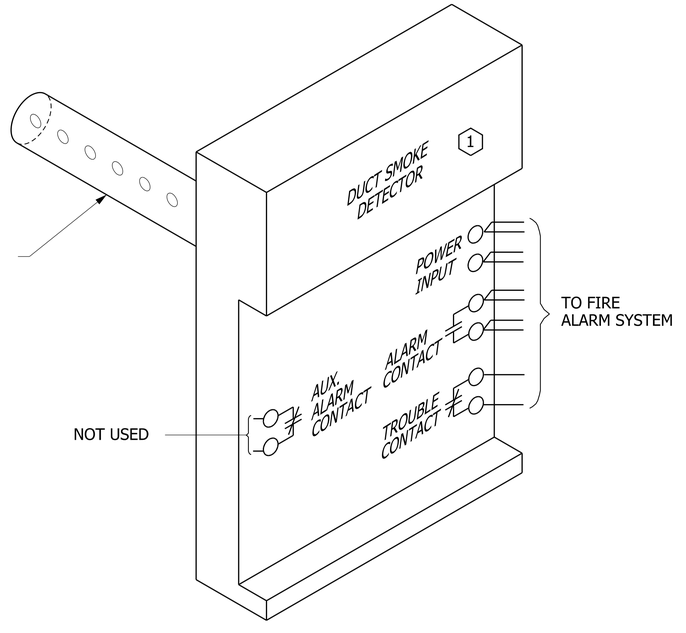

DUCT SMOKE DETECTOR INSTALLATION DETAIL

NO SCALE

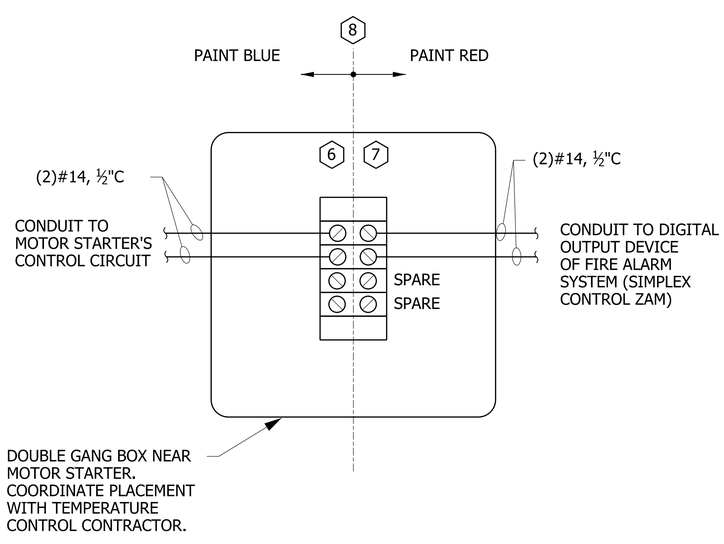

FIRE ALARM TO TEMPERATURE CONTROL INTERFACE BOX DETAIL

NO SCALE

REFERENCE NOTES

1. DETECTOR SHALL BE SUPPLIED AND DEVICE CONNECTIONS MADE BY THE FIRE ALARM SYSTEM CONTRACTOR.
2. DETECTOR SHALL BE WIRED TO ITS OWN ZONE, OR SHALL BE ASSIGNED ITS OWN ADDRESS IN THE ADDRESSABLE FIRE ALARM SYSTEM.
3. DETECTOR SHALL BE RESETTABLE FROM THE FIRE ALARM CONTROL PANEL.
4. UPDATE FIRE ALARM SYSTEM ANNUNCIATOR AND ZONE/ADDRESS LIST FOR EACH DUCT SMOKE DETECTOR.
5. CABLE & CONDUIT FOR DETECTOR & INTERFACE BOX SHALL BE FURNISHED BY ELECTRICAL CONTRACTOR. DETECTOR LOCATION AND TEMPERATURE CONTROL WIRING TO INTERFACE BOX SHALL BE INSTALLED BY THE TEMPERATURE CONTROLS CONTRACTOR
6. USE 4" SQUARE DEEP BOX WITH 4 TERMINAL, TERMINAL STRIP INSTALLED INSIDE. STRIP TO BE 120 VOLT RATED.
7. INTERFACE BOX AND CONTROLLED OUTPUT DEVICE (OF FIRE ALARM SYSTEM) SHOULD BE CLOSE TO MOTOR STARTER OF ASSOCIATED FAN SYSTEM.
8. PAINT INTERFACE BOX EXTERIOR AND COVER RED AND BLUE; FIRE ALARM SYSTEM HALF IS RED, TEMPERATURE CONTROL SIDE IS BLUE
9. PLACE AND INSTALL DUCT SMOKE DETECTOR IN AN ACCESSIBLE LOCATIONS, AND IN FULL COMPLIANCE WITH SMOKE DETECTOR MANUFACTURER'S PLACEMENT AND INSTRUCTIONS.

FIRE ALARM SYSTEM DEVICE INTERCONNECTION DETAIL - DUCT SMOKE DETECTOR INTERFACE CONNECTION WITH TEMPERATURE CONTROLS

NO SCALE

28310005.dgn

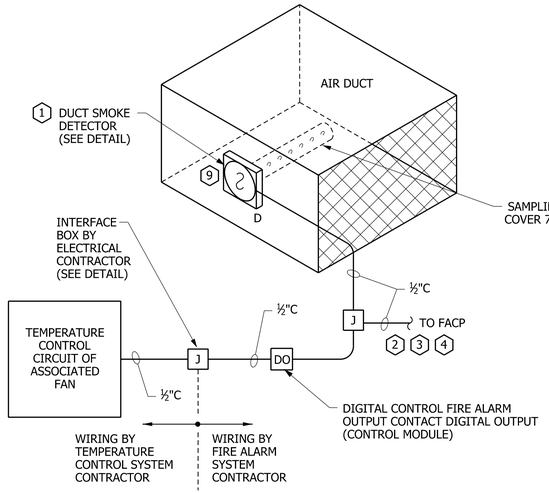

INTERFACE CIRCUIT LAYOUT

NO SCALE

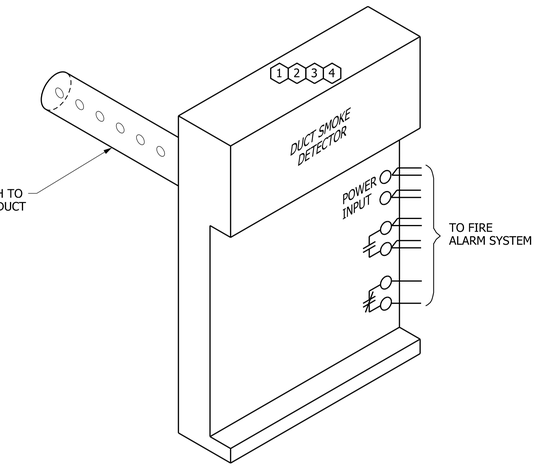

DUCT SMOKE DETECTOR INSTALLATION DETAIL

NO SCALE

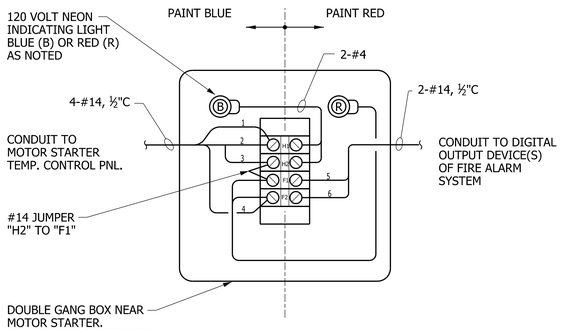

FIRE ALARM TO TEMPERATURE CONTROL INTERFACE BOX DETAIL

NO SCALE

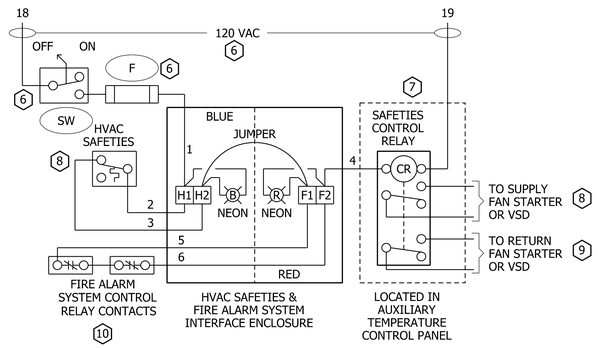

INTERFACE BOX WIRING DETAIL

NO SCALE

REFERENCE NOTES

1. DETECTOR SHALL BE SUPPLIED AND WIRED BY THE FIRE ALARM SYSTEM CONTRACTOR.
2. DETECTOR SHALL ASSIGNED IT'S OWN ADDERSS IN THE ADDRESSABLE FIRE ALARM SYSTEM
3. DETECTOR SHALL BE RESETTABLE FROM THE FIRE ALARM CONTROL PANEL.
4. UPDATE FIRE ALARM SYSTEM ADDRESS LIST FOR EACH DUCT SMOKE DETECTOR AND DIGITAL CONTROL DEVICE.
5. DETECTOR SHALL BE SIMILAR TO OTHER PHOTO ELECTRIC SMOKE DETECTORS IN DLDG.
6. PART OF MOTOR STARTER
7. PART OF TEMPERATURE CONTROL PANEL.
8. PART OF TEMPERATURE CONTROL/FAN SYSTEM.
9. PRESENT ONLY WHEN REQUIRED BY HVAC DESIGN.
10. CONTACT IS IN FIRE ALARM SYSTEM CONTROL RELAY,

GENERAL NOTES

A. EXACT NUMBER OF CONDUCTORS DEPENDENT OF FIRE ALARM SYSTEM BEING USED. CONFIRM NUMBER AND TYPE REQUIRED AT EACH LOCATION WITH FIRE ALARM SYSTEM SUPPLIER.

B. USE 4" SQUARE DEEP BOX WITH 4 TERMINAL, TERMINAL STRIP INSTALLED INSIDE. STRIP TO BE 120 VOLT RATED.

C. INTERFACE BOX AND CONTROLLED OUTPUT DEVICE (OF FIRE ALARM SYSTEM) SHOULD BE CLOSE TO MOTOR STARTER OR TEMPERATURE CONTROL PANEL.

D. PAINT INTERFACE BOX EXTERIOR AND COVER RED AND BLUE; FIRE ALARM SYSTEM HALF IS RED, TEMPERATURE CONTROL SIDE IS BLUE

E. PLACE AND INSTALL DUCT SMOKE DETECTOR IN AN ACCESSIBLE LOCATIONS, AND IN FULL COMPLIANCE WITH SMOKE DETECTOR MANUFACTURER'S PLACEMENT AND INSTRUCTIONS.

ADDRESSABLE (INTELLIGENT) FIRE ALARM SYSTEM DEVICE INTERCONNECTION DETAIL
DUCT SMOKE DETECTOR INTERFACE CONNECTION TO TEMPERATURE CONTROLS

NO SCALE

28310006.dgn

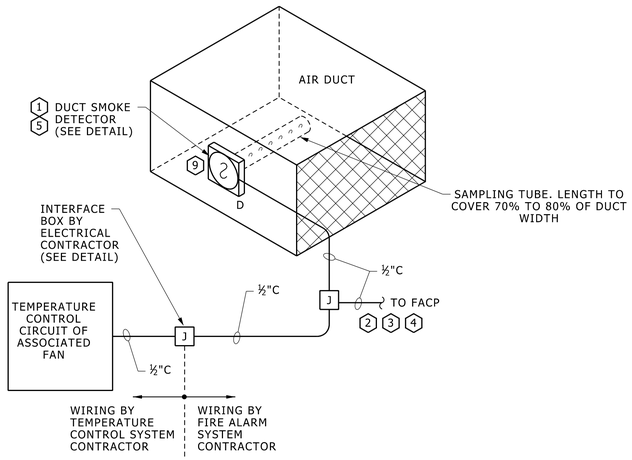

INTERFACE CIRCUIT LAYOUT

NO SCALE

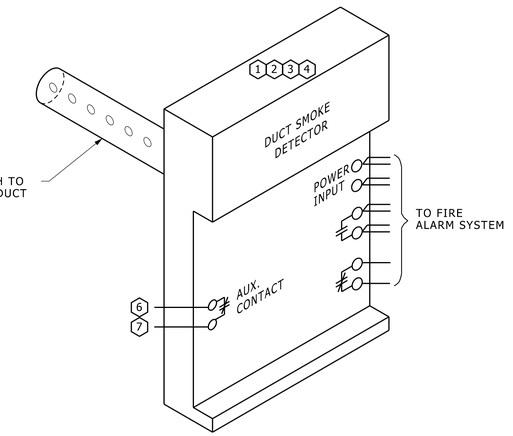

DUCT SMOKE DETECTOR INSTALLATION DETAIL

NO SCALE

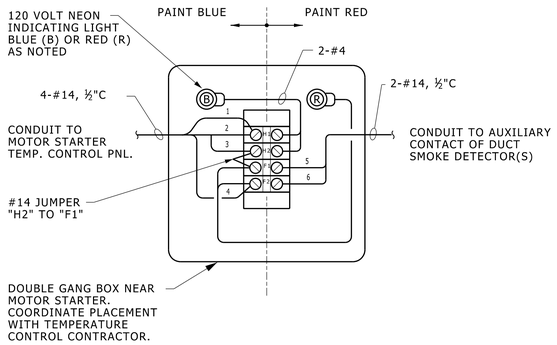

FIRE ALARM TO TEMPERATURE CONTROL INTERFACE BOX DETAIL

NO SCALE

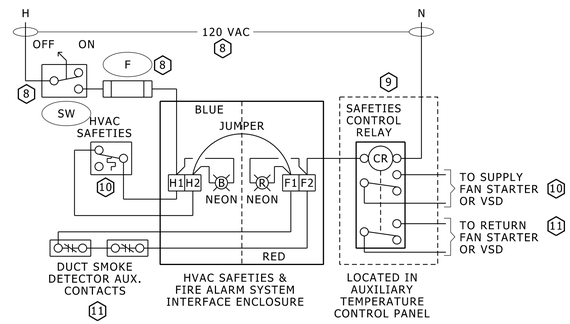

INTERFACE BOX WIRING DETAIL

NO SCALE

REFERENCE NOTES

1. DETECTOR SHALL BE SUPPLIED AND WIRED BY THE FIRE ALARM SYSTEM CONTRACTOR.
2. DETECTOR SHALL BE WIRED TO IT'S OWN ZONE.
3. DETECTOR SHALL BE RESETTABLE FROM THE FIRE ALARM CONTROL PANEL.
4. UPDATE FIRE ALARM SYSTEM ANNUNCIATOR AND ZONE LIST FOR EACH DUCT SMOKE DETECTOR.
5. DETECTOR SHALL HAVE AUXILIARY RELAY WITH NORMALLY CLOSED CONTACT.
6. ROUTE FIRE ALARM TO TEMPERATURE CONTROL BOX.
7. THERE IS TYPICALLY ONLY ONE DUCT SMOKE DETECTOR ON FAN SYSTEM. IF SYSTEM IS INTERLOCKED, RUN CONTACTS OF ASSOCIATED DUCT SMOKE DETECTORS IN SERIES.
8. PART OF MOTOR STARTER.
9. PART OF TEMPERATURE CONTROL PANEL.
10. PART OF TEMPERATURE CONTROL/FAN SYSTEM.
11. PRESENT ONLY WHEN REQUIRED BY HVAC DESIGN.

GENERAL NOTES

A. EXACT NUMBER OF CONDUCTORS DEPENDENT OF FIRE ALARM SYSTEM BEING USED. CONFIRM NUMBER AND TYPE REQUIRED AT EACH LOCATION WITH FIRE ALARM SYSTEM SUPPLIER.

B. USE 4" SQUARE DEEP BOX WITH 4 TERMINAL, TERMINAL STRIP INSTALLED INSIDE. STRIP TO BE 120 VOLT RATED.

C. INTERFACE BOX AND CONTROLLED OUTPUT DEVICE (OF FIRE ALARM SYSTEM) SHOULD BE CLOSE TO MOTOR STARTER OR TEMPERATURE CONTROL PANEL.

D. PAINT INTERFACE BOX EXTERIOR AND COVER RED AND BLUE; FIRE ALARM SYSTEM HALF IS RED, TEMPERATURE CONTROL SIDE IS BLUE

E. PLACE AND INSTALL DUCT SMOKE DETECTOR IN AN ACCESSIBLE LOCATIONS, AND IN FULL COMPLIANCE WITH SMOKE DETECTOR MANUFACTURER'S PLACEMENT AND INSTRUCTIONS.

"HARDWIRED" (DUMB) FIRE ALARM SYSTEM DEVICE INTERCONNECTION DETAIL
DUCT SMOKE DETECTOR INTERFACE CONNECTION TO TEMPERATURE CONTROLS

NO SCALE

28310007.dgn

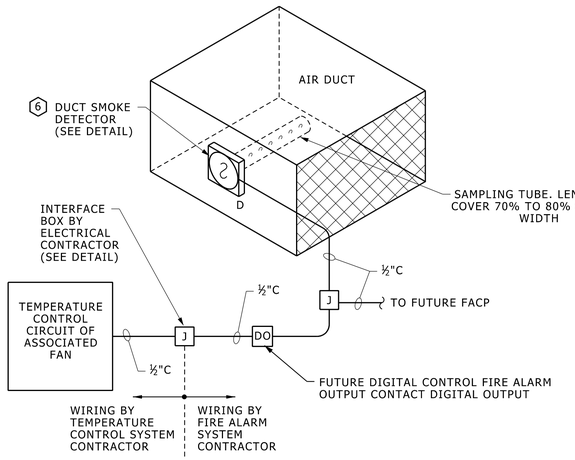

INTERFACE CIRCUIT LAYOUT

NO SCALE

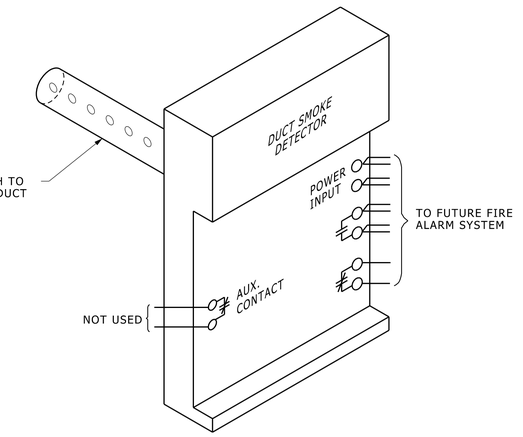

DUCT SMOKE DETECTOR INSTALLATION DETAIL

NO SCALE

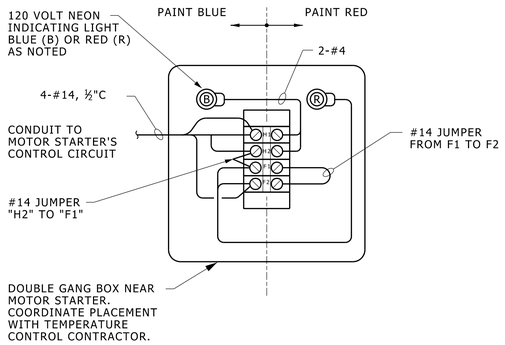

DUCT SMOKE DETECTOR TO TEMPERATURE CONTROL INTERFACE BOX DETAIL

NO SCALE

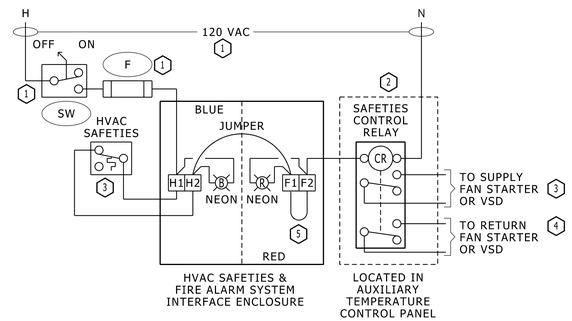

INTERFACE BOX WIRING DETAIL

NO SCALE

REFERENCE NOTES

1. PART OF MOTOR STARTER
2. PART OF TEMPERATURE CONTROL PANEL.
3. PART OF TEMPERATURE CONTROL/FAN SYSTEM.
4. PRESENT ONLY WHEN REQUIRED BY HVAC DESIGN.
5. INSTALL JUMPER FROM F1 TO H2.
6. DUCT DETECTOR PROVIDED AND INSTALLED BY THE MECHANICAL/TEMPERATURE CONTROL CONTRACTOR.

GENERAL NOTES

A. USE THIS DETAIL: IN BUILDINGS WITHOUT A FIRE ALARM SYSTEM & NEW AIR HANDLING IS INSTALLED, OR WHEN MAJOR UPGRADES OF AN EXISTING SYSTEM ARE PREFORMED.

B. EXACT NUMBER OF CONDUCTORS DEPENDENT ON FUTURE FIRE ALARM SYSTEM TO BE USED.

C. USE 4" SQUARE DEEP BOX WITH 4 TERMINAL, TERMINAL STRIP INSTALLED INSIDE. STRIP TO BE 120 VOLT RATED.

D. INTERFACE BOX SHOULD BE CLOSE TO MOTOR STARTER OR TEMPERATURE CONTROL PANEL.

E. PAINT INTERFACE BOX EXTERIOR AND COVER RED AND BLUE; FIRE ALARM SYSTEM HALF IS RED, TEMPERATURE CONTROL SIDE IS BLUE

F. PLACE AND INSTALL DUCT SMOKE DETECTOR IN AN ACCESSIBLE LOCATIONS, AND IN FULL COMPLIANCE WITH SMOKE DETECTOR MANUFACTURER'S PLACEMENT AND INSTRUCTIONS.

INTERCONNECTION DETAIL WHEN NO FIRE ALARM SYSTEM IS PRESENT
FUTURE DUCT SMOKE DETECTOR INTERFACE CONNECTION TO TEMPERATURE CONTROLS

NO SCALE

28310008.dgn

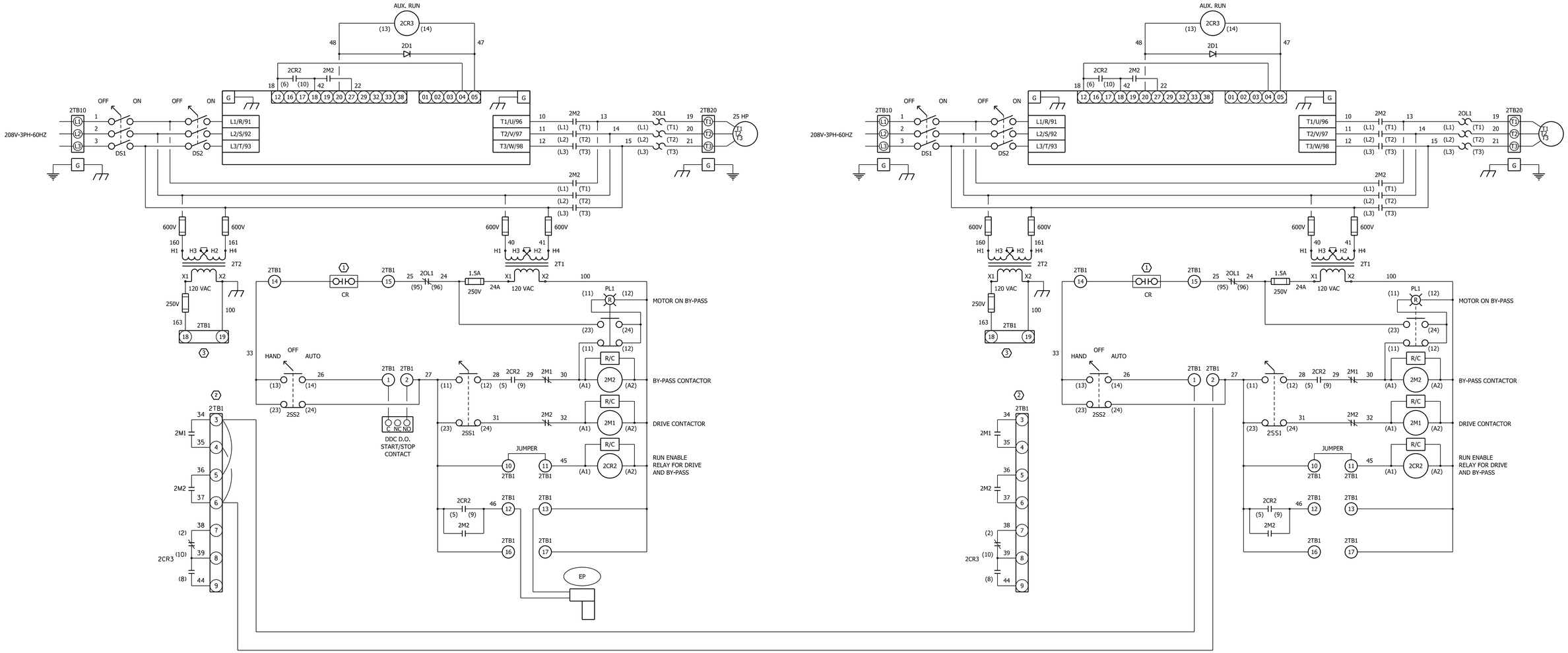

OVERALL INTERCONNECTION DIAGRAM

NO SCALE

NOTES:

1. CONTROLLED BY DUCT SMOKE DETECTOR(S) VIA THE "FIRE ALARM TO TEMPERATURE CONTROL INTERFACE BOX". SEE DETAILS: 1672006, 1672007 & 1672008 AS APPROPRIATE.
2. CONNECTIONS TO "INTERFACE BOX" ARE ROUTED THROUGH TERMINAL BLOCK "2TB1" IN EACH FAN SYSTEM.
3. THESE TERMINALS PROVIDE THE 120 VOLT CONTEND VOLTAGE TO INTERFACE BOX.

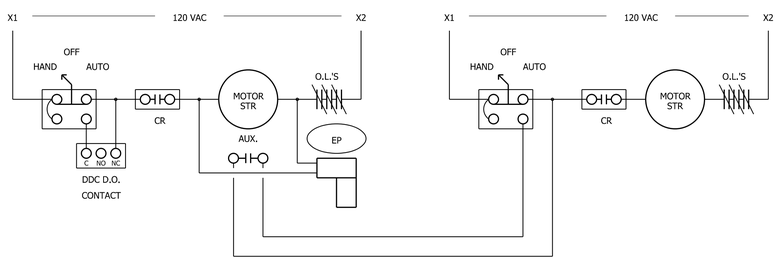

INTERLOCKING DIAGRAM

NO SCALE

16720009.dgn

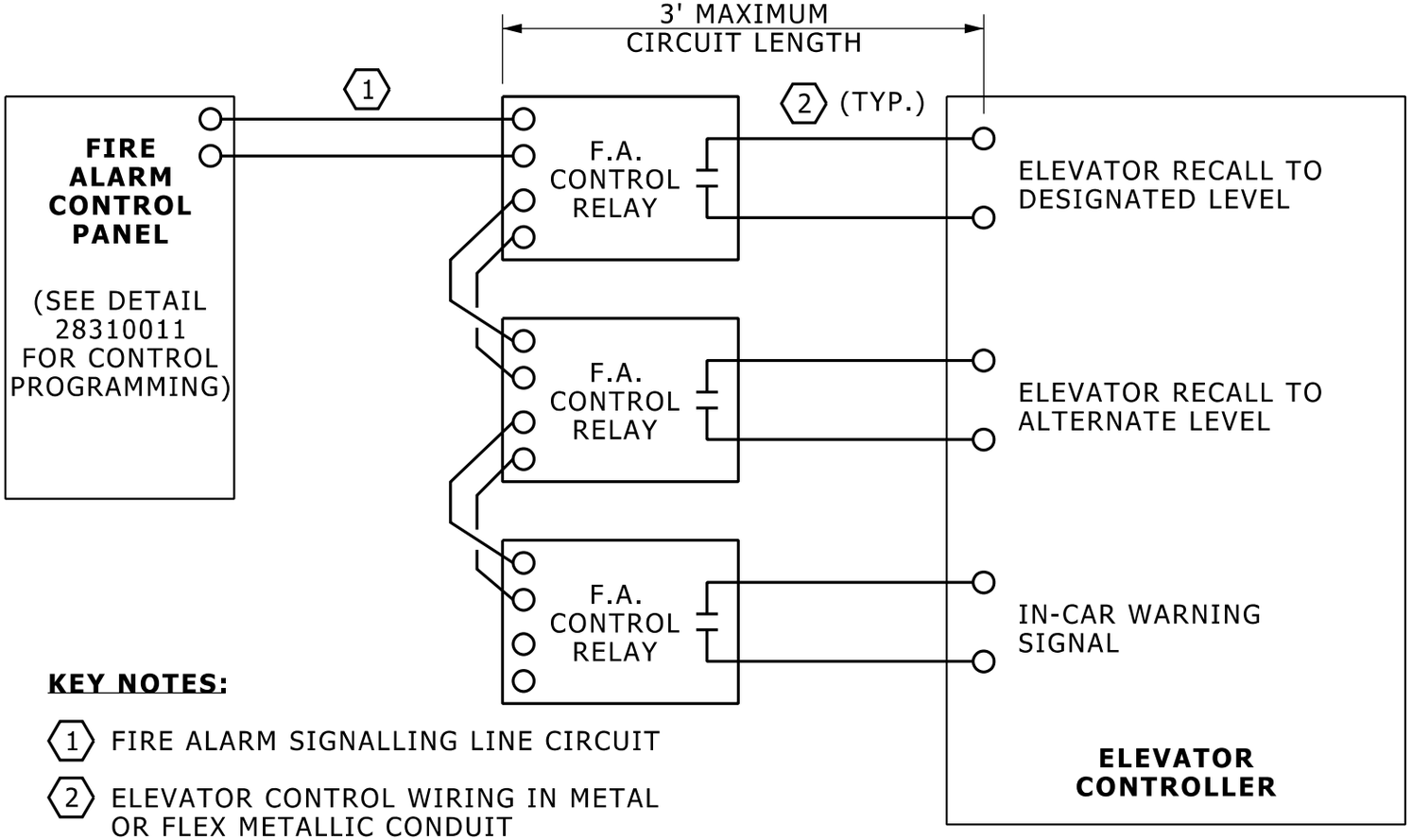

KEY NOTES:

1. FIRE ALARM SIGNALLING LINE CIRCUIT
2. ELEVATOR CONTROL WIRING IN METAL OR FLEX METALLIC CONDUIT

SPECIAL NOTE:
IT IS THE JOINT RESPONSIBILITY OF THE FIRE ALARM CONTRACTOR AND THE ELEVATOR CONTRACTOR TO COORDINATE BETWEEN THE TWO TRADES FOR WORK RELATED TO THE FIRE ALARM SYSTEM AND ELEVATOR CONTROL INTERFACES.

ELEVATOR RECALL CONTROL WIRING

NO SCALE

28310010.dgn

KEY NOTES;

(1) IF ELEVATOR MACHINE OR CONTROL ROOM IS ON THE DESIGNATED LEVEL, ELEVATOR SHALL RECALL TO ALTERNATE RATHER THAN DESIGNATED LEVEL.

(2) FIRE ALARM CONTROL PANEL AND REMOTE ANNUNCIATOR MESSAGES FOR MACHINE/CONTROL ROOM AND HOIST WAY DETECTORS SHALL STATE "ELEVATOR IS UNSAFE TO USE".

		FIRE ALARM SYSTEM OUTPUTS				
		BUILDING ALARM /SUPERVISORY	ELEVATOR RECALL TO DESIGNATED LEVEL	ELEVATOR RECALL TO ALTERNATE LEVEL	IN-CAR WARNING SIGNAL (2)	DESIGNATED LEVEL LOBBY WARNING SIGNAL
	INPUT DEVICES	**A**	**B**	**C**	**D**	**E**
1	BASEMENT	●				
2	BALANCE OF 1ST LEVEL DEVICES	●				
3	BALANCE OF 2ND LEVEL DEVICES	●				
4	BALANCE OF MIDDLE & TOP LEVEL DEVICES	●				
5	BASEMENT ELEVATOR LOBBY SMOKE DETECTOR	●	●			
6	DESIGNATED LEVEL ELEVATOR LOBBY SMOKE DETECTOR	●		●		
7	ALTERNATE LEVEL ELEVATOR LOBBY SMOKE DETECTOR	●	●			
8	MIDDLE & TOP LEVEL ELEVATOR LOBBY SMOKE DETECTORS	●	●			
9	ELEVATOR MACHINE/CONTROL ROOM SMOKE DETECTOR (1)	●	●		●	
10	ELEVATOR HOIST WAY SMOKE DETECTOR (IF USED)	●	●		●	
11	ATRIUM BEAM DETECTOR & OTHER SPECIAL DEVICES	●				

ELEVATOR RECALL CONTROL PROGRAM MATRIX

NO SCALE

28310011.dgn

KEY NOTES:

1. RECALL TO DESIGNATED LEVEL
2. RECALL TO ALTERNATE LEVEL
3. ACTIVATE IN-CAR WARNING

LEGEND:

- SPRINKLER
- SMOKE DETECTOR
- IN-CAR WARNING SIGNAL

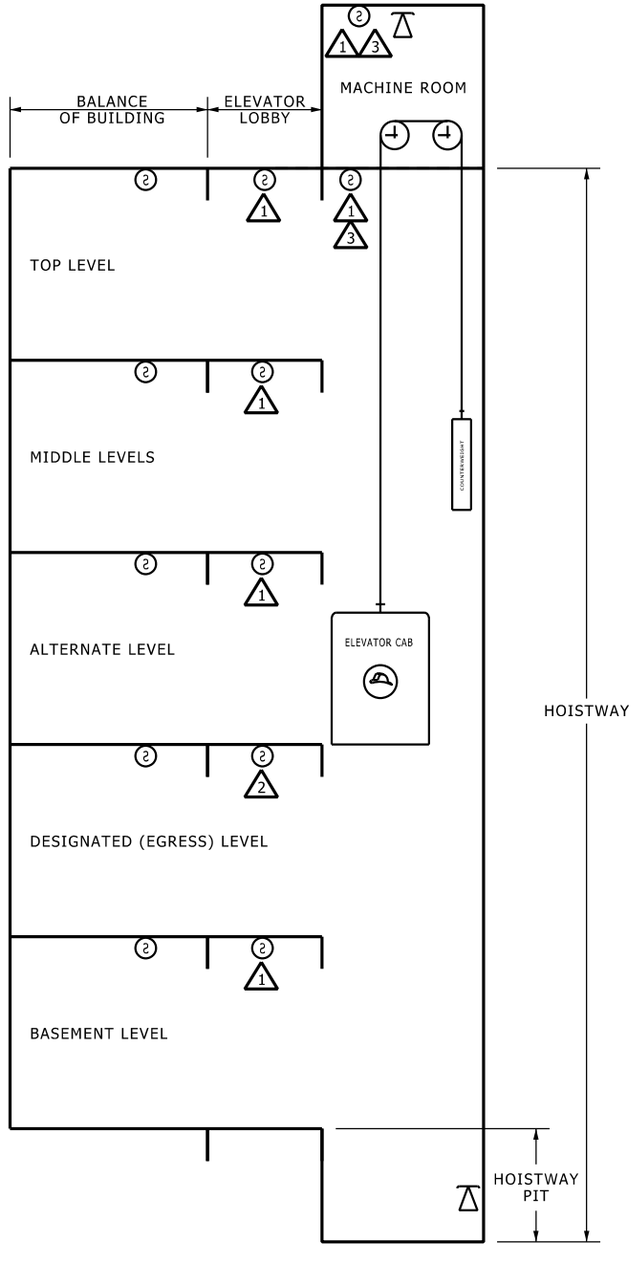

ELEVATOR RECALL SCHEMATIC DIAGRAM

NO SCALE

28310012.dgn

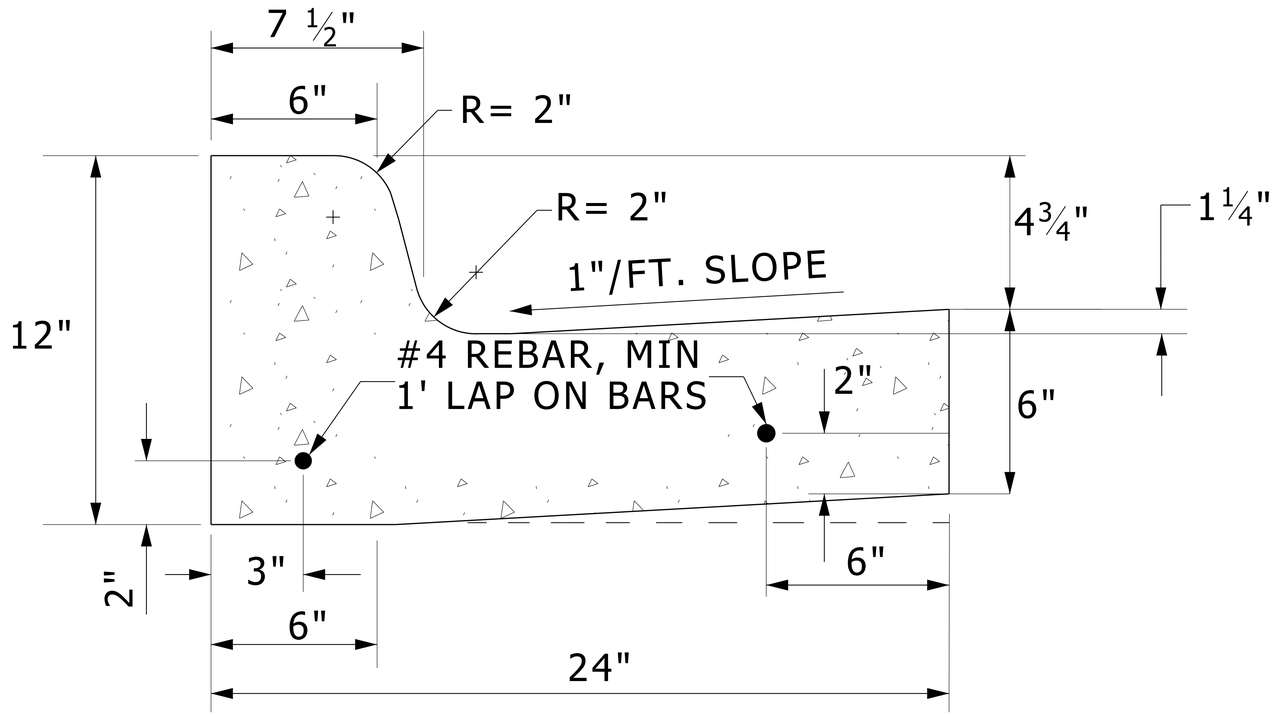

NOTES:
1) AT 90° ANGLE POINTS IN THE CURB LINE, PLACE EXPANSION JOINTS IN THE "LONG LEG" - 18" FROM THE BACK-OF-CURB OF THE "SHORT LEG."
2) DOWEL CURB PATCHES TO ADJACENT CURB
3) PLACE CONTROL JOINTS EVERY 10 FEET

CITY OF ANN ARBOR CURB & GUTTER

NO SCALE

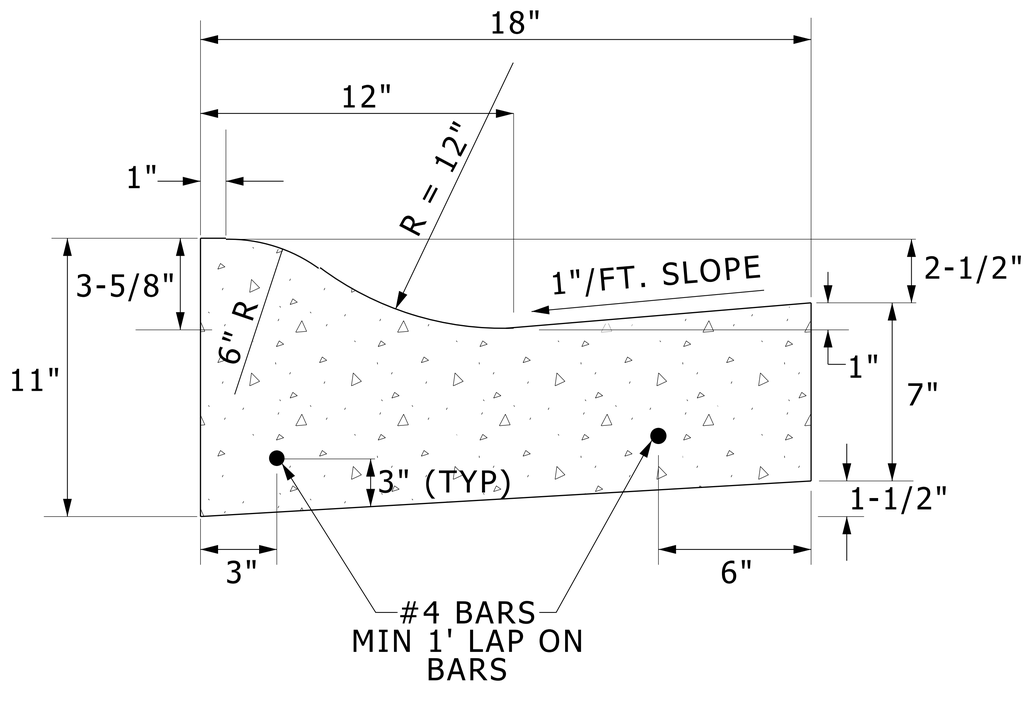

NOTES:
1) AT 90° ANGLE POINTS IN THE CURB LINE, PLACE EXPANSION JOINTS IN THE "LONG LEG" - 18" FROM THE BACK-OF-CURB OF THE "SHORT LEG."
2) DOWEL CURB PATCHES TO ADJACENT CURB
3) PLACE CONTROL JOINTS EVERY 10 FEET

MOUNTABLE CURB & GUTTER

NO SCALE

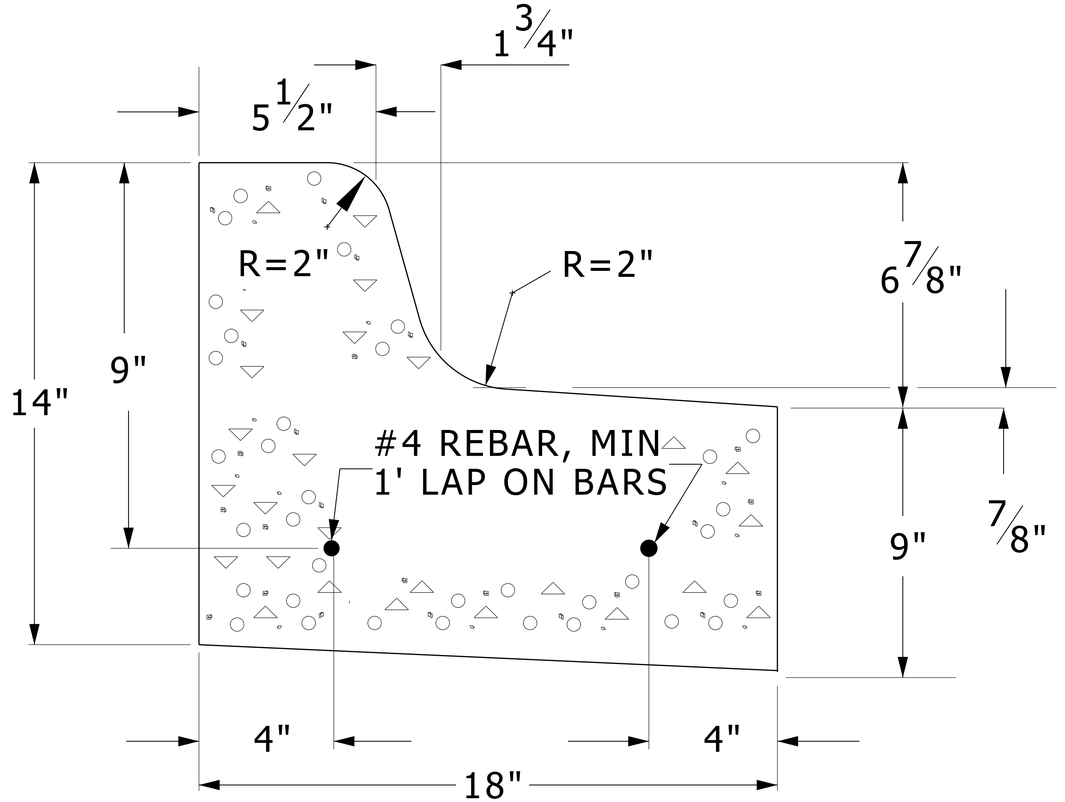

NOTES:
1) AT 90° ANGLE POINTS IN THE CURB LINE, PLACE EXPANSION JOINTS IN THE "LONG LEG" - 18" FROM THE BACK-OF-CURB OF THE "SHORT LEG."
2) DOWEL CURB PATCHES TO ADJACENT CURB
3) PLACE CONTROL JOINTS EVERY 10 FEET

18" CURB & GUTTER, SPILLOUT

NO SCALE

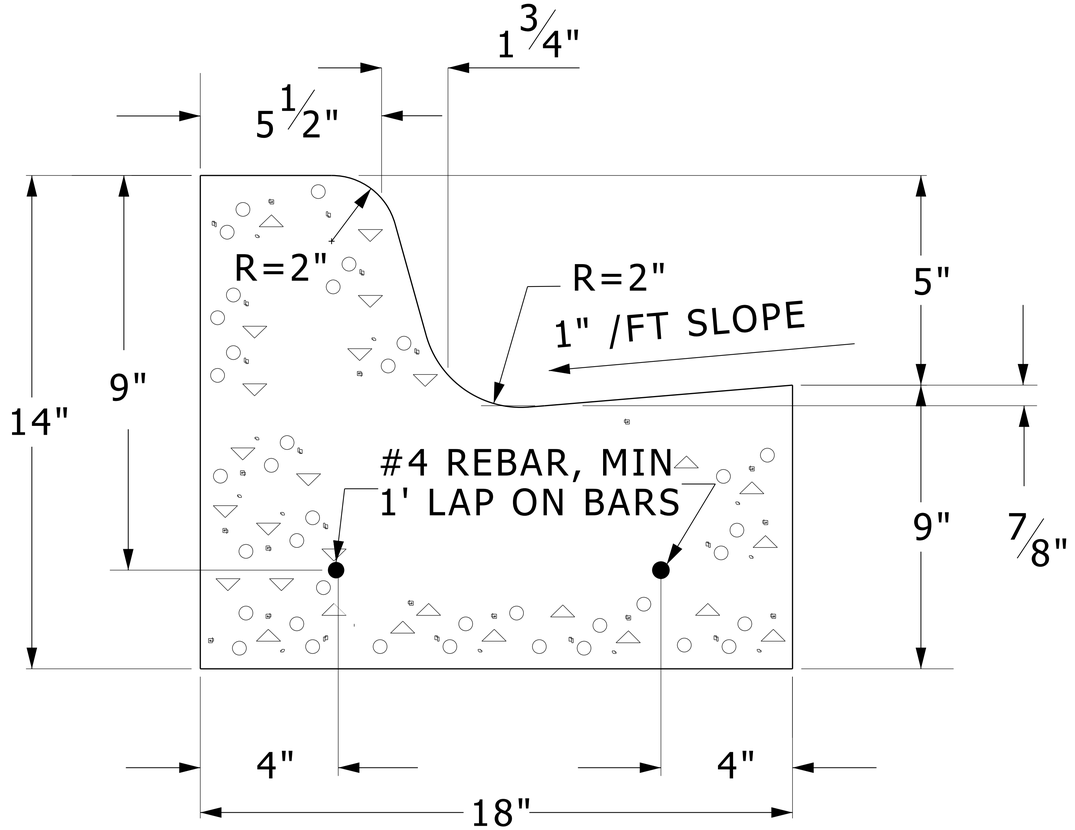

NOTES:
1) AT 90° ANGLE POINTS IN THE CURB LINE, PLACE EXPANSION JOINTS IN THE "LONG LEG" - 18" FROM THE BACK-OF-CURB OF THE "SHORT LEG."
2) DOWEL CURB PATCHES TO ADJACENT CURB
3) PLACE CONTROL JOINTS EVERY 10 FEET

18" CURB & GUTTER (U OF M STANDARD)

NO SCALE

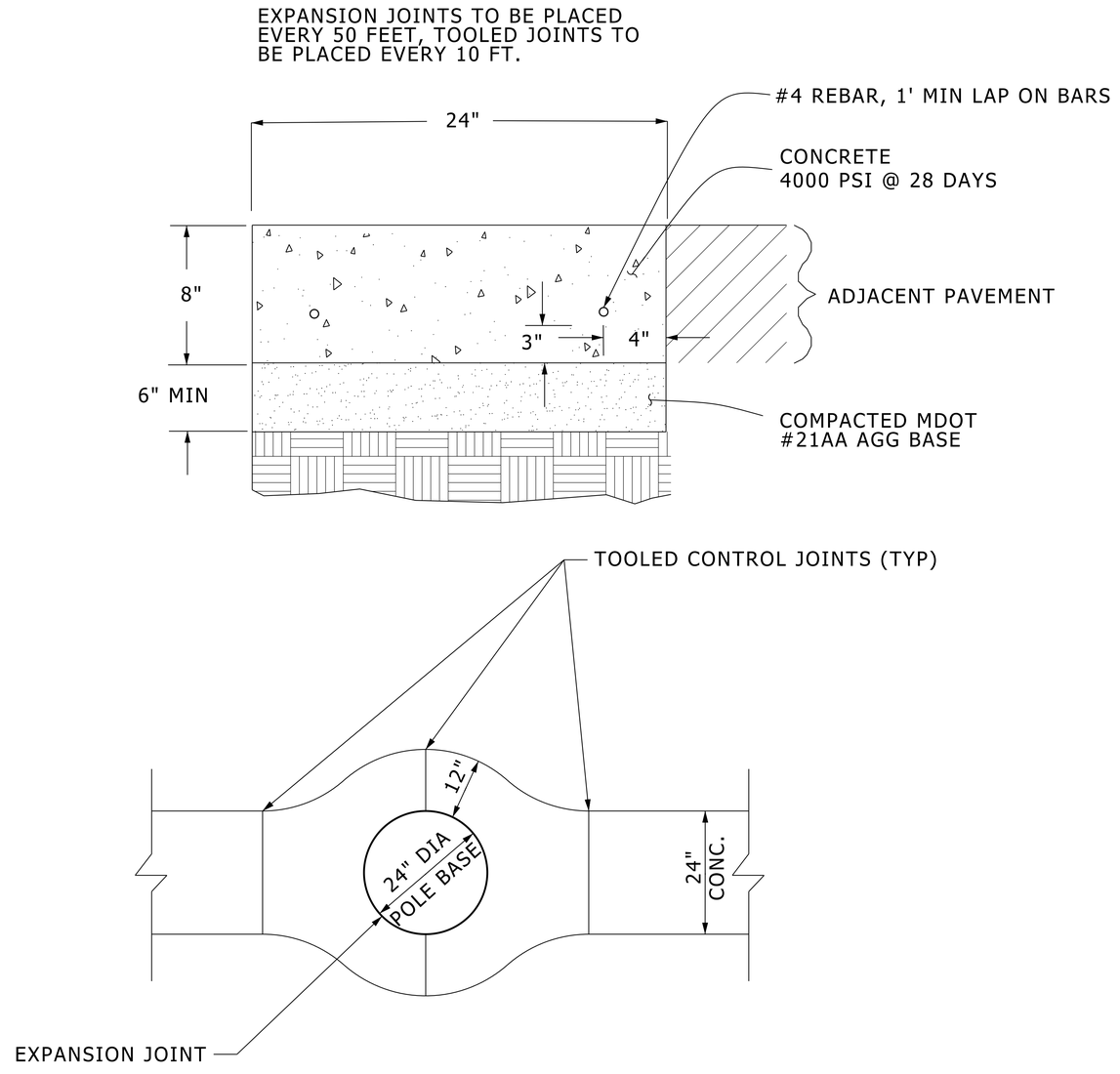

CONCRETE FASTENER STRIP

NO SCALE

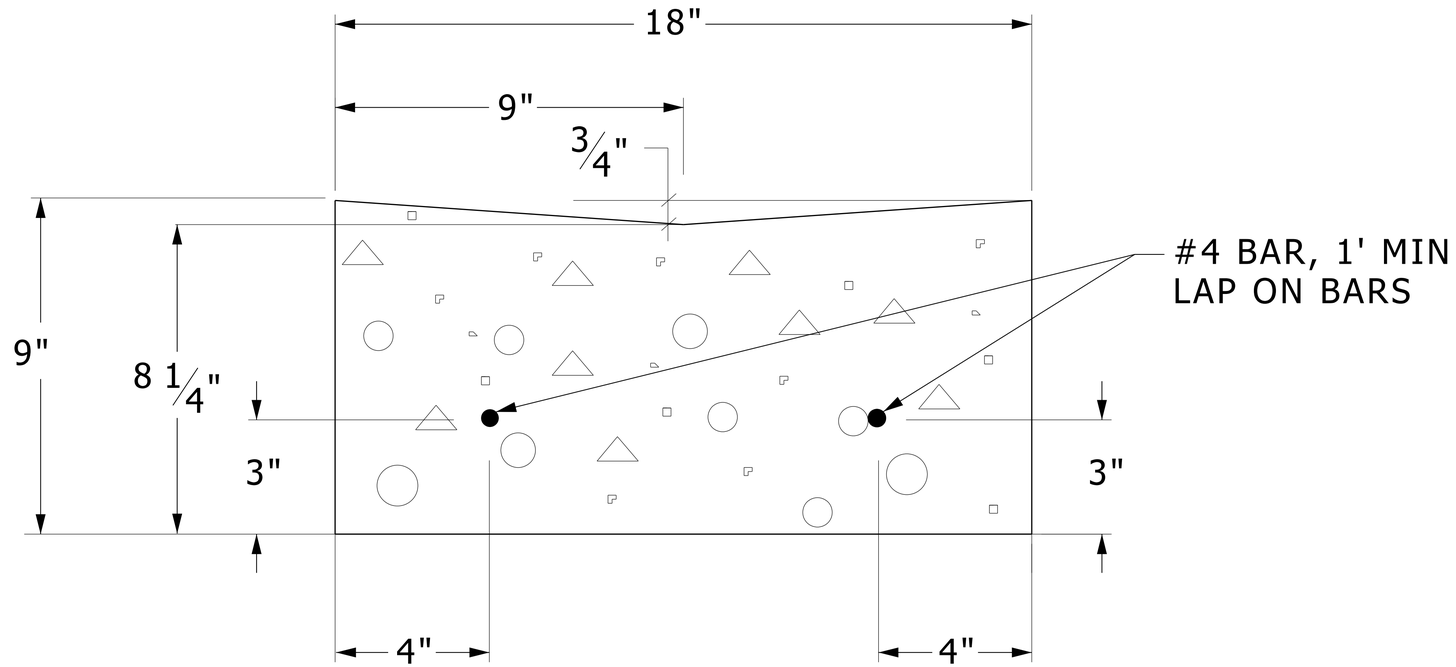

NOTES:
1) AT 90° ANGLE POINTS IN THE CURB LINE, PLACE EXPANSION JOINTS IN THE "LONG LEG" - 18" FROM THE BACK-OF-CURB OF THE "SHORT LEG."
2) DOWEL CURB PATCHES TO ADJACENT CURB

18" GUTTER PAN

NO SCALE

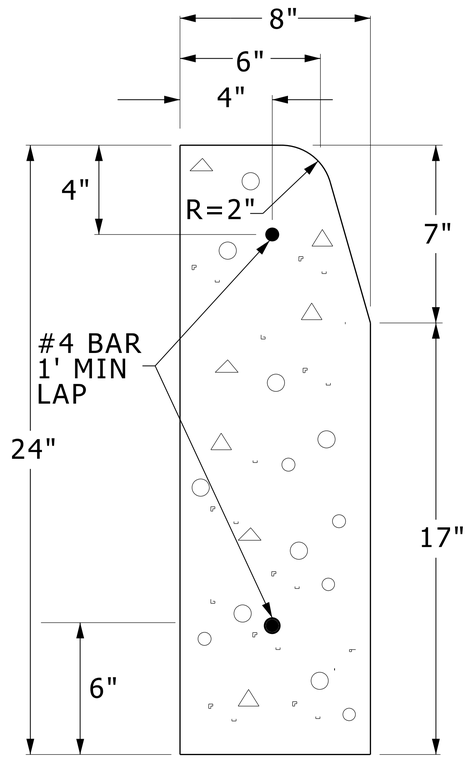

NOTES:
1) AT 90° ANGLE POINTS IN THE CURB LINE, PLACE EXPANSION JOINTS IN THE "LONG LEG" - 18" FROM THE BACK-OF-CURB OF THE "SHORT LEG."
2) DOWEL CURB PATCHES TO ADJACENT CURB
3) PLACE CONTROL JOINTS EVERY 10 FEET

STRAIGHT CURB

NO SCALE

Note: Check MDOT website for Ramp updates and use most recent.

* MAXIMUM LANDING SLOPE IS 2.0% IN EACH DIRECTION OF TRAVEL. LANDING MINIMUM DIMENSIONS 5' x 5'. SEE NOTES.

** MAXIMUM RAMP CROSS SLOPE IS 2.0%. RUNNING SLOPE 5% - 7% (8.3% MAXIMUM). SEE NOTES.

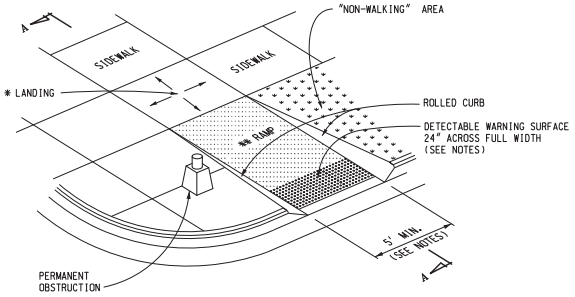

SIDEWALK RAMP TYPE R

(ROLLED SIDES)

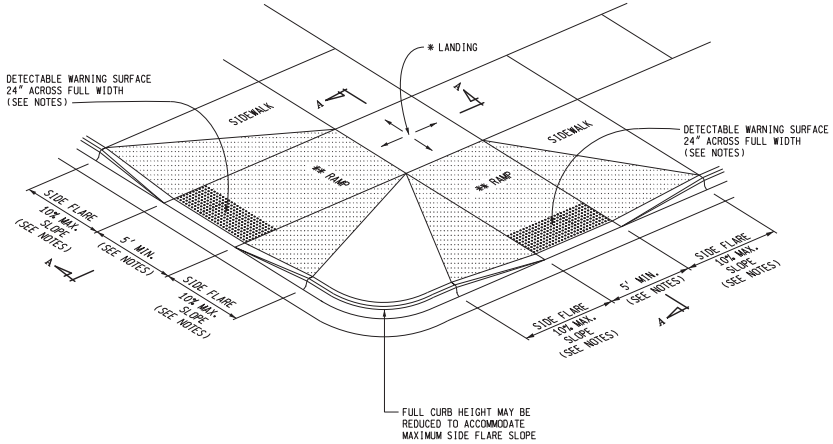

SIDEWALK RAMP TYPE F

(FLARED SIDES, TWO RAMPS SHOWN)

MDOT Michigan Department of Transportation PREPARED BY DESIGN DIVISION DRAWN BY: B.L.T. CHECKED BY: W.K.P.	DEPARTMENT DIRECTOR Kirk T. Steudle APPROVED BY: _____ DIRECTOR, BUREAU OF FIELD SERVICES APPROVED BY: _____ DIRECTOR, BUREAU OF DEVELOPMENT	MICHIGAN DEPARTMENT OF TRANSPORTATION BUREAU OF DEVELOPMENT STANDARD PLAN FOR SIDEWALK RAMP AND DETECTABLE WARNING DETAILS F.H.W.A. APPROVAL | 12-11-2017 PLAN DATE | R-28-J | SHEET 1 OF 7

* MAXIMUM LANDING SLOPE IS 2.0% IN EACH DIRECTION OF TRAVEL. LANDING MINIMUM DIMENSIONS 5' x 5'. SEE NOTES.

** MAXIMUM RAMP CROSS SLOPE IS 2.0%. RUNNING SLOPE 5% - 7% (8.3% MAXIMUM). SEE NOTES.

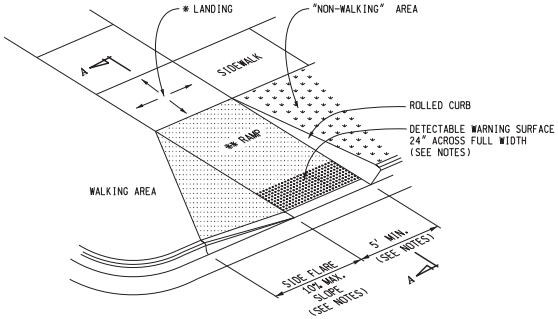

SIDEWALK RAMP TYPE RF

(ROLLED / FLARED SIDES)

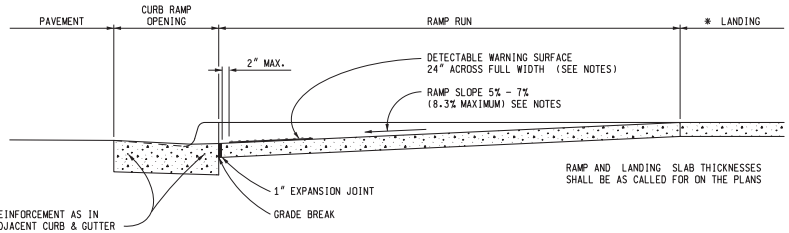

CURB TYPE	MAXIMUM RISE (INCHES)	
	A	B
B1	3/4	1
B2	3/4	1
B3	3/4	1
D1	3/4	1
D2	3/4	1
D3	3/4	1
C1	1/2	1/2
C2	1/2	1/2
C3	3/4	1/2
C4	3/4	1/2
C5	1	1/2
C6	1	1/2
F1	1/2	1/2
F2	1/2	1/2
F3	3/4	1/2
F4	3/4	1/2
F5	1	1/2
F6	1	1/2

FOR CURB TYPES SEE STANDARD PLAN R-30-SERIES

SECTION A-A

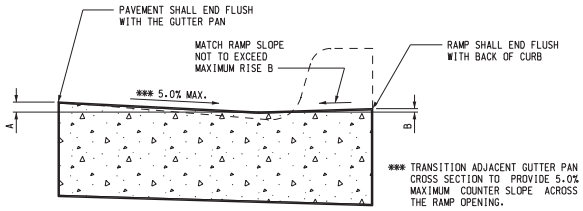

SECTION THROUGH CURB RAMP OPENING

(TYPICAL ALL RAMP TYPES)

MICHIGAN DEPARTMENT OF TRANSPORTATION BUREAU OF DEVELOPMENT STANDARD PLAN FOR SIDEWALK RAMP AND DETECTABLE WARNING DETAILS F.H.W.A. APPROVAL | 12-11-2017 PLAN DATE | R-28-J | SHEET 2 OF 7		

AS-LET PLAN REVISIONS							
NO.	DATE	AUTH	DESCRIPTION	NO.	DATE	AUTH	DESCRIPTION

MDOT Michigan Department of Transportation

0 VERT. (FT)
0 HORZ. (FT)

FILE: | DATE: | DESIGN UNIT: | TSC: | CS: | JN: | DRAWING | SHEET

Note: Check MDOT website for Ramp updates and use most recent.

* MAXIMUM LANDING SLOPE IS 2.0% IN EACH DIRECTION OF TRAVEL. LANDING MINIMUM DIMENSIONS 5' x 5'. SEE NOTES.

** MAXIMUM RAMP CROSS SLOPE IS 2.0%. RUNNING SLOPE 5% - 7% (8.3% MAXIMUM). SEE NOTES.

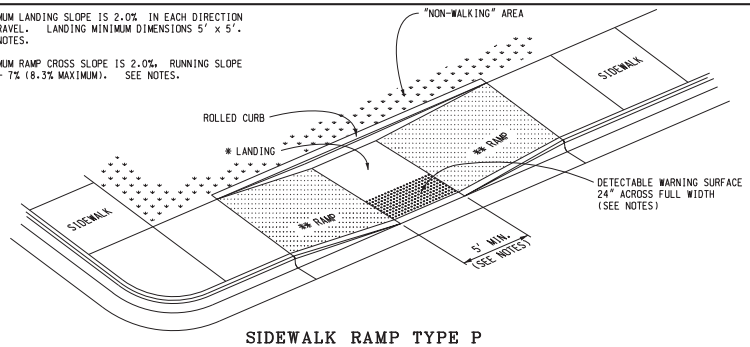

SIDEWALK RAMP TYPE P

(PARALLEL RAMP)

DO NOT USE IN AREAS WHERE PONDING MAY OCCUR

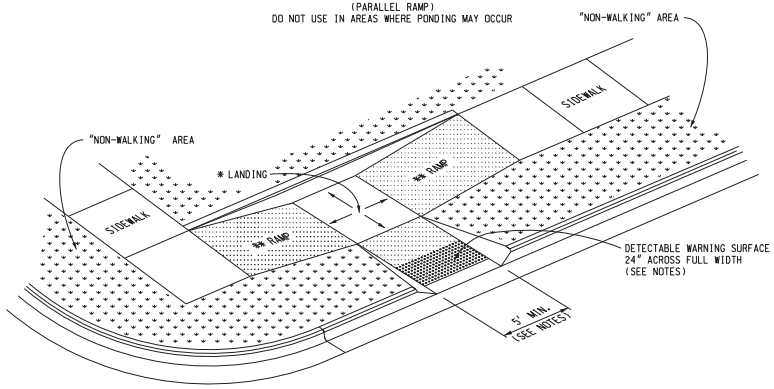

SIDEWALK RAMP TYPE C

(COMBINATION RAMP)

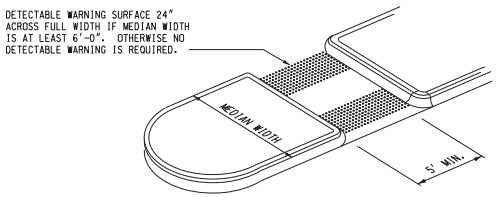

SIDEWALK RAMP TYPE M

(MEDIAN ISLAND)

MICHIGAN DEPARTMENT OF TRANSPORTATION

BUREAU OF DEVELOPMENT STANDARD PLAN FOR

SIDEWALK RAMP AND DETECTABLE WARNING DETAILS

F.H.W.A. APPROVAL	12-11-2017 PLAN DATE	R-28-J	SHEET 3 OF 7

* MAXIMUM LANDING SLOPE IS 2.0% IN EACH DIRECTION OF TRAVEL. LANDING MINIMUM DIMENSIONS 5' x 5'. SEE NOTES.

** MAXIMUM RAMP CROSS SLOPE IS 2.0%. RUNNING SLOPE 5% - 7% (8.3% MAXIMUM). SEE NOTES.

Avoid use of Ramp Type D.
This detail does not meet ADA striping requirements.
Do not install sidewalk Ramp type D on U-M projects unless Campus Planning and AEC Civil approve.

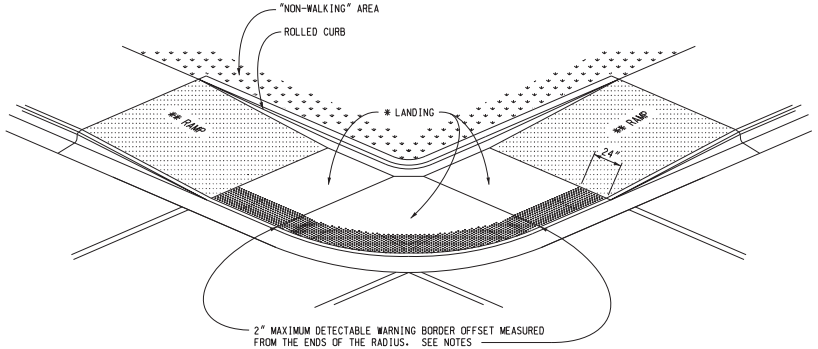

(RADIAL DETECTABLE WARNING SHOWN)

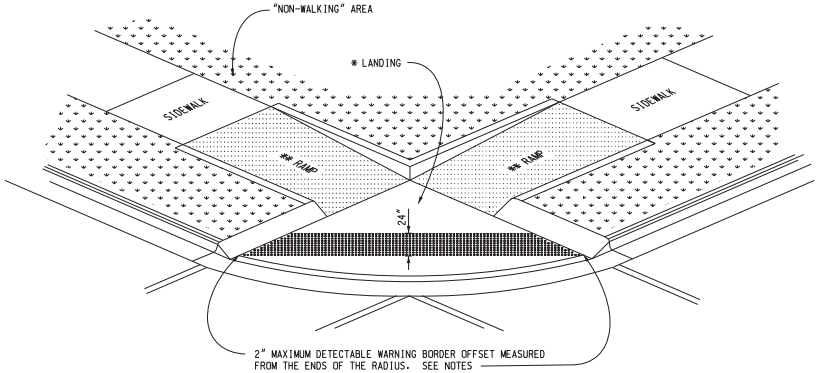

(TANGENT DETECTABLE WARNING SHOWN)

SIDEWALK RAMP TYPE D

(DEPRESSED CORNER)

USE ONLY WHEN INDEPENDENT DIRECTIONAL RAMPS CAN NOT BE CONSTRUCTED FOR EACH CROSSING DIRECTION

MICHIGAN DEPARTMENT OF TRANSPORTATION

BUREAU OF DEVELOPMENT STANDARD PLAN FOR

SIDEWALK RAMP AND DETECTABLE WARNING DETAILS

F.H.W.A. APPROVAL	12-11-2017 PLAN DATE	R-28-J	SHEET 4 OF 7

AS-LET PLAN REVISIONS							
NO.	DATE	AUTH	DESCRIPTION	NO.	DATE	AUTH	DESCRIPTION

MDOT Michigan Department of Transportation

VERT. (FT) 0

HORZ. (FT) 0

FILE:

DATE:

DESIGN UNIT:

TSC:

CS:

JN:

DRAWING

SHEET

Note: Check MDOT website for Ramp updates and use most recent.

* THE DETECTABLE WARNING SURFACE SHALL BE LOCATED SO THAT THE EDGE NEAREST THE RAIL CROSSING IS 6' MINIMUM AND 15' MAXIMUM FROM THE CENTERLINE OF THE NEAREST RAIL. DO NOT PLACE DETECTABLE WARNING ON RAILROAD CROSSING MATERIAL.

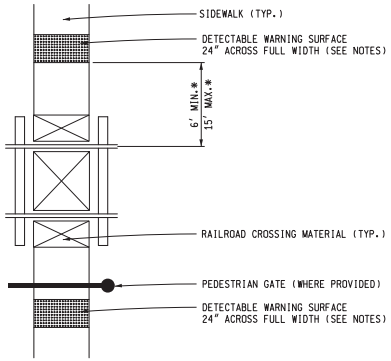

DETECTABLE WARNING AT RAILROAD CROSSING

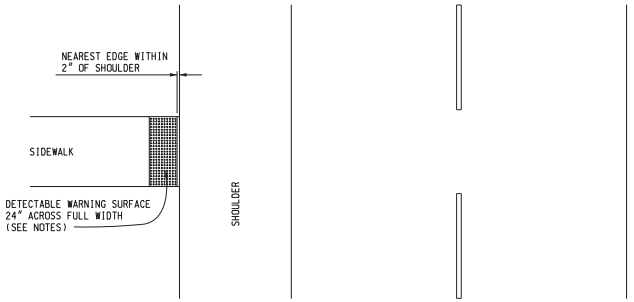

DETECTABLE WARNING AT FLUSH SHOULDER OR ROADWAY

MICHIGAN DEPARTMENT OF TRANSPORTATION
BUREAU OF DEVELOPMENT STANDARD PLAN FOR

SIDEWALK RAMP AND DETECTABLE WARNING DETAILS

F.H.W.A. APPROVAL	12-11-2017 PLAN DATE	R-28-J	SHEET 5 OF 7

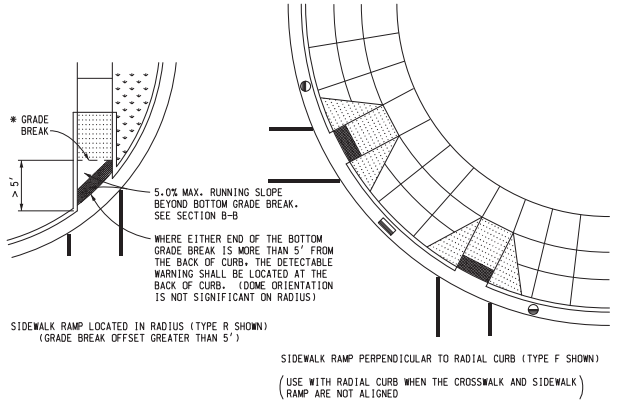

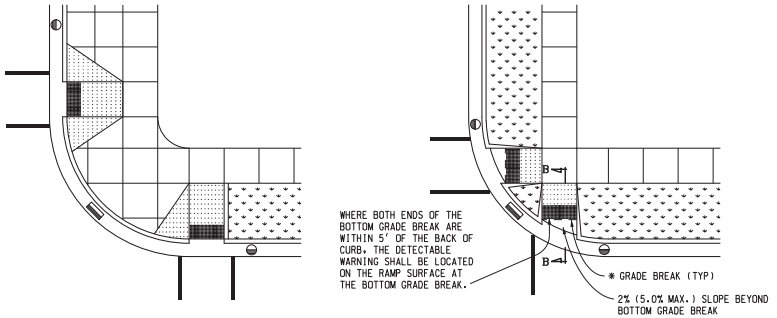

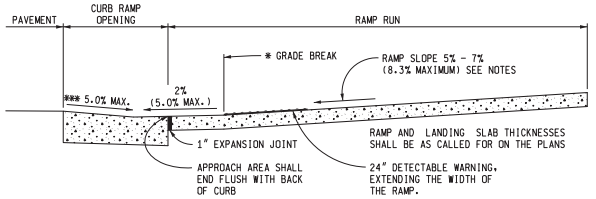

* GRADE BREAKS AT THE TOP AND BOTTOM OF CURB RAMPS SHALL BE PERPENDICULAR TO THE DIRECTION OF TRAVEL.

*** TRANSITION ADJACENT GUTTER PAN CROSS SECTION TO PROVIDE 5.0% MAXIMUM COUNTER SLOPE ACROSS THE RAMP OPENING.

SEE SHEET 2 FOR CURB RAMP OPENING DETAILS.

SECTION B-B

SIDEWALK RAMP ORIENTATION

MICHIGAN DEPARTMENT OF TRANSPORTATION
BUREAU OF DEVELOPMENT STANDARD PLAN FOR

SIDEWALK RAMP AND DETECTABLE WARNING DETAILS

F.H.W.A. APPROVAL	12-11-2017 PLAN DATE	R-28-J	SHEET 6 OF 7

AS-LET PLAN REVISIONS							
NO.	DATE	AUTH	DESCRIPTION	NO.	DATE	AUTH	DESCRIPTION

MDOT Michigan Department of Transportation

0 VERT. (FT)
0 HORZ. (FT)

FILE:
DATE:
DESIGN UNIT:
TSC:
CS:
JN:

DRAWING | SHEET

Notes to designer (do not print on detail):
1. Install on ramps at street crossings.
2. Detectable warnings are typically not installed on ramps in parking lots.
3. Use most recent detail from MDOT website.

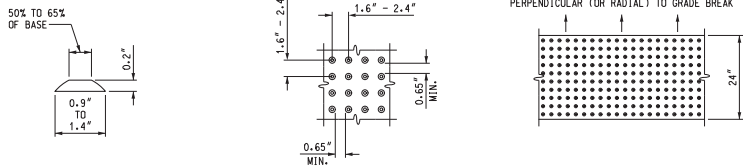

DOME SECTION | DOME SPACING | DOME ALIGNMENT

DETECTABLE WARNING DETAILS

NOTES:

DETAILS SPECIFIED ON THIS PLAN APPLY TO ALL CONSTRUCTION, RECONSTRUCTION, OR ALTERATION OF STREETS, CURBS, OR SIDEWALKS IN THE PUBLIC RIGHT OF WAY.

SIDEWALK RAMPS ARE TO BE LOCATED AS SPECIFIED ON THE PLANS OR AS DIRECTED BY THE ENGINEER.

RAMPS SHALL BE PROVIDED AT ALL CORNERS OF AN INTERSECTION WHERE THERE IS EXISTING OR PROPOSED SIDEWALK AND CURB. RAMPS SHALL ALSO BE PROVIDED AT MARKED AND/OR SIGNALIZED MID-BLOCK CROSSINGS.

SURFACE TEXTURE OF THE RAMP SHALL BE THAT OBTAINED BY A COARSE BROOMING, TRANSVERSE TO THE RUNNING SLOPE.

SIDEWALK SHALL BE RAMPED WHERE THE DRIVEWAY CURB IS EXTENDED ACROSS THE WALK.

CARE SHALL BE TAKEN TO ASSURE A UNIFORM GRADE ON THE RAMP. WHERE CONDITIONS PERMIT, IT IS DESIRABLE THAT THE SLOPE OF THE RAMP BE IN ONLY ONE DIRECTION, PARALLEL TO THE DIRECTION OF TRAVEL.

RAMP WIDTH SHALL BE INCREASED, IF NECESSARY, TO ACCOMMODATE SIDEWALK SNOW REMOVAL EQUIPMENT NORMALLY USED BY THE MUNICIPALITY.

WHEN 5' MINIMUM WIDTHS ARE NOT PRACTICABLE, RAMP WIDTH MAY BE REDUCED TO NOT LESS THAN 4' AND LANDINGS TO NOT LESS THAN 4' x 4'.

CURB RAMPS WITH A RUNNING SLOPE ≤5% DO NOT REQUIRE A TOP LANDING. HOWEVER, ANY CONTINUOUS SIDEWALK OR PEDESTRIAN ROUTE CROSSING THROUGH OR INTERSECTING THE CURB RAMP MUST INDEPENDENTLY MAINTAIN A CROSS SLOPE NOT GREATER THAN 2% PERPENDICULAR TO ITS OWN DIRECTION(S) OF TRAVEL.

DETECTABLE WARNING SURFACE COVERAGE IS 24" MINIMUM IN THE DIRECTION OF RAMP/PATH TRAVEL AND THE FULL WIDTH OF THE RAMP/PATH OPENING EXCLUDING CURBED OR FLARED CURB TRANSITION AREAS. A BORDER OFFSET NOT GREATER THAN 2" MEASURED ALONG THE EDGES OF THE DETECTABLE WARNING IS ALLOWABLE. FOR RADIAL CURB THE OFFSET IS MEASURED FROM THE ENDS OF THE RADIUS.

FOR NEW ROADWAY CONSTRUCTION, THE RAMP CROSS SLOPE MAY NOT EXCEED 2.0%. FOR ALTERATIONS TO EXISTING ROADWAYS, THE CROSS SLOPE MAY BE TRANSITIONED TO MEET AN EXISTING ROADWAY GRADE. THE CROSS SLOPE TRANSITION SHALL BE APPLIED UNIFORMLY OVER THE FULL LENGTH OF THE RAMP.

THE MAXIMUM RUNNING SLOPE OF 8.3% IS RELATIVE TO A FLAT (0%) REFERENCE. HOWEVER, IT SHALL NOT REQUIRE ANY RAMP OR SERIES OF RAMPS TO EXCEED 15 FEET IN LENGTH NOT INCLUDING LANDINGS OR TRANSITIONS.

DRAINAGE STRUCTURES SHOULD NOT BE PLACED IN LINE WITH RAMPS. THE LOCATION OF THE RAMP SHOULD TAKE PRECEDENCE OVER THE LOCATION OF THE DRAINAGE STRUCTURE. WHERE EXISTING DRAINAGE STRUCTURES ARE LOCATED IN THE RAMP PATH OF TRAVEL, USE A MANUFACTURER'S ADA COMPLIANT GRATE. OPENINGS SHALL NOT BE GREATER THAN ½". ELONGATED OPENINGS SHALL BE PLACED SO THAT THE LONG DIMENSION IS PERPENDICULAR TO THE DOMINANT DIRECTION OF TRAVEL.

THE TOP OF THE JOINT FILLER FOR ALL RAMP TYPES SHALL BE FLUSH WITH THE ADJACENT CONCRETE.

CROSSWALK AND STOP LINE MARKINGS, IF USED, SHALL BE SO LOCATED AS TO STOP TRAFFIC SHORT OF RAMP CROSSINGS. SPECIFIC DETAILS FOR MARKING APPLICATIONS ARE GIVEN IN THE "MICHIGAN MANUAL ON UNIFORM TRAFFIC CONTROL DEVICES".

FLARED SIDES WITH A SLOPE OF 10% MAXIMUM, MEASURED ALONG THE ROADSIDE CURB LINE, SHALL BE PROVIDED WHERE AN UNOBSTRUCTED CIRCULATION PATH LATERALLY CROSSES THE SIDEWALK RAMP. FLARED SIDES ARE NOT REQUIRED WHERE THE RAMP IS BORDERED BY LANDSCAPING, UNPAVED SURFACE OR PERMANENT FIXED OBJECTS. WHERE THEY ARE NOT REQUIRED, FLARED SIDES CAN BE CONSIDERED IN ORDER TO AVOID SHARP CURB RETURNS AT RAMP OPENINGS.

DETECTABLE WARNING PLATES MUST BE INSTALLED USING FABRICATED OR FIELD CUT UNITS CAST AND/OR ANCHORED IN THE PAVEMENT TO RESIST SHIFTING OR HEAVING.

MICHIGAN DEPARTMENT OF TRANSPORTATION
BUREAU OF DEVELOPMENT STANDARD PLAN FOR

SIDEWALK RAMP AND DETECTABLE WARNING DETAILS

F.H.W.A. APPROVAL	12-11-2017 PLAN DATE	R-28-J	SHEET 7 OF 7

MICHIGAN DEPARTMENT OF TRANSPORTATION
BUREAU OF DEVELOPMENT STANDARD PLAN FOR

F.H.W.A. APPROVAL	PLAN DATE		SHEET OF

AS-LET PLAN REVISIONS

NO.	DATE	AUTH	DESCRIPTION	NO.	DATE	AUTH	DESCRIPTION

MDOT Michigan Department of Transportation

0 VERT. (FT)
0 HORZ. (FT)

FILE:

DATE:
DESIGN UNIT:
TSC:

CS:
JN:

DRAWING | SHEET

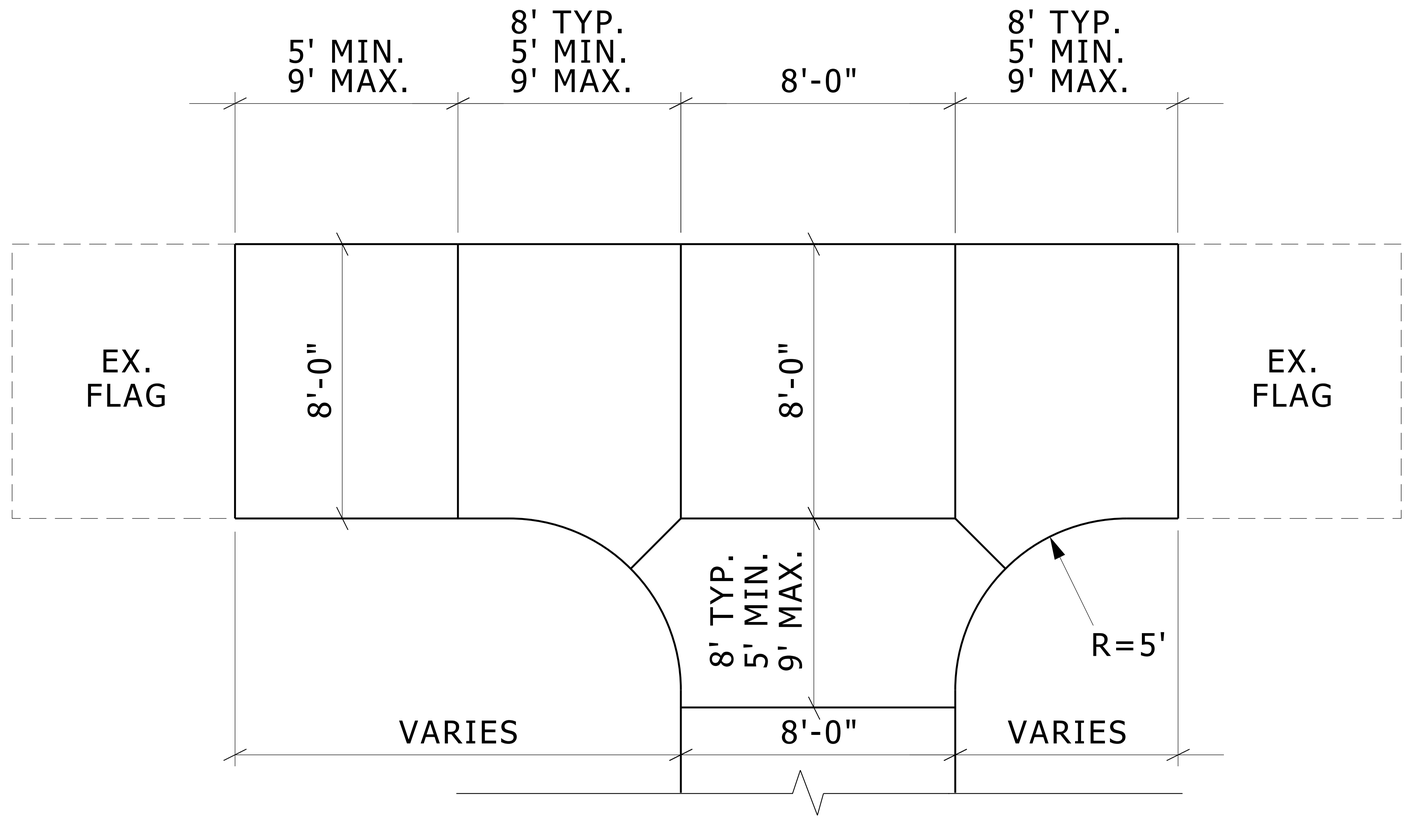

SIDEWALK CONTROL JOINT LAYOUT

NO SCALE

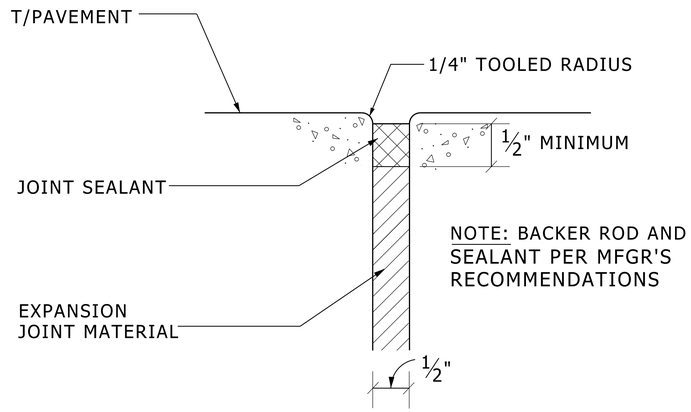

PAVEMENT EXPANSION JOINT (E.J.)

NO SCALE

1. VERTICAL SURFACES:
   PROVIDE MANUFACTURER'S STANDARD, NON-MODIFIED, TWO-OR-MORE-PART, POLY-SULFIDE-BASED, ELASTOMERIC SEALANT; COMPLYING WITH EITHER ASTM C 920 TYPE M CLASS 25, OR FS TT-S-00227E CLASS A; NON-SAG GRADE/TYPE.

2. HORIZONTAL SURFACES:
   PROVIDE MANUFACTURER'S STANDARD, NON-MODIFIED, TWO-OR-MORE-PART, POLYURETHANE-BASED, ELASTOMERIC SEALANT; COMPLYING WITH EITHER ASTM C 920 TYPE M CLASS 25, OR FS TT-S-00227E CLASS A; SELF-LEVELING GRADE/TYPE.

3. SET UP TIME FOR SEALANT ON WALKING SURFACES SHALL BE NO LONGER THAN 8 HOURS.

4. PROVIDE PRODUCT OF ONE OF THE FOLLOWING MANUFACTURES:
   a. CONTECH/SONNEBORN
   b. MAMECO INTERNATIONAL
   c. W.R. MEADOWS, INC.
   d. PECORA CORP.
   e. PRODUCTS RESEARCH & CHEMICAL CORP.
   f. SIKA CHEMICAL CORP.
   g. TREMCO, INC.
   h. TOCH/CARBOLINE

5. DO NOT ALLOW SEALANTS TO OVERFLOW OR SPILL ONTO ADJOINING SURFACES. REMOVE EXCESS AND SPILLAGE OF SEALANTS PROMPTLY.

6. SEALED ZIP STRIPS ARE ACCEPTABLE.

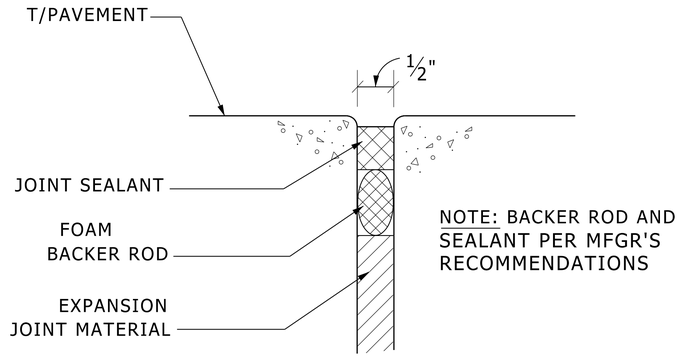

EXPANSION JOINT REPLACEMENT

NO SCALE

1. VERTICAL SURFACES:
   PROVIDE MANUFACTURER'S STANDARD, NON-MODIFIED, TWO-OR-MORE-PART, POLY-SULFIDE-BASED, ELASTOMERIC SEALANT; COMPLYING WITH EITHER ASTM C 920 TYPE M CLASS 25, OR FS TT-S-00227E CLASS A; NON-SAG GRADE/TYPE.

2. HORIZONTAL SURFACES:
   PROVIDE MANUFACTURER'S STANDARD, NON-MODIFIED, TWO-OR-MORE-PART, POLYURETHANE-BASED, ELASTOMERIC SEALANT; COMPLYING WITH EITHER ASTM C 920 TYPE M CLASS 25, OR FS TT-S-00227E CLASS A; SELF-LEVELING GRADE/TYPE.

3. SET UP TIME FOR SEALANT ON WALKING SURFACES SHALL BE NO LONGER THAN 8 HOURS.

4. PROVIDE PRODUCT OF ONE OF THE FOLLOWING MANUFACTURES:
   a. CONTECH/SONNEBORN
   b. MAMECO INTERNATIONAL
   c. W.R. MEADOWS, INC.
   d. PECORA CORP.
   e. PRODUCTS RESEARCH & CHEMICAL CORP.
   f. SIKA CHEMICAL CORP.
   g. TREMCO, INC.
   h. TOCH/CARBOLINE

5. DO NOT ALLOW SEALANTS TO OVERFLOW OR SPILL ONTO ADJOINING SURFACES. REMOVE EXCESS AND SPILLAGE OF SEALANTS PROMPTLY.

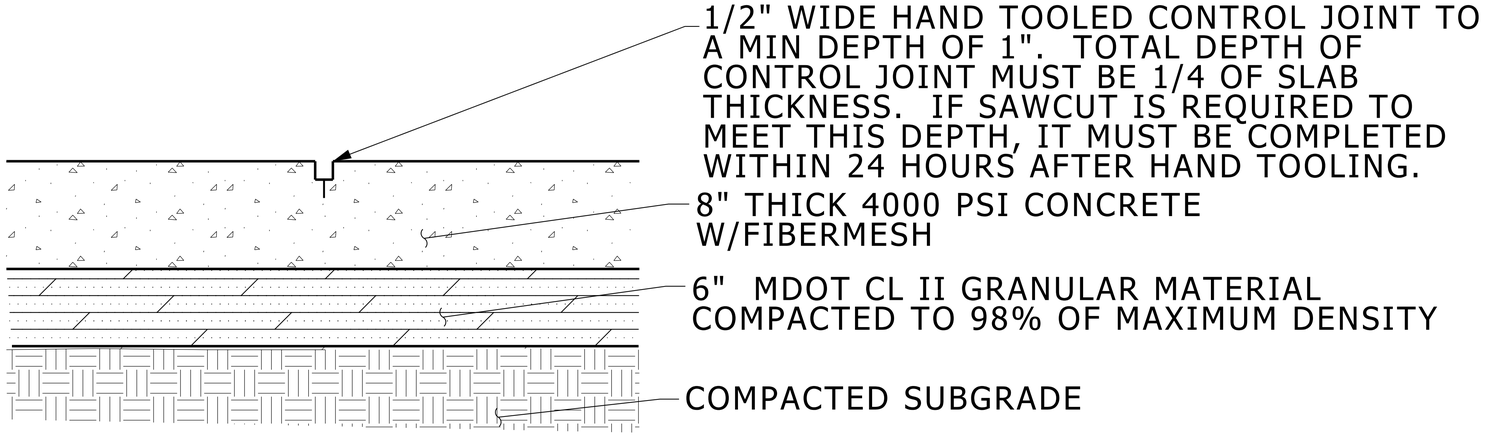

SIDEWALK - 8" THICKNESS

NO SCALE

NOTES:

EXPANSION JOINTS SHALL BE INSTALLED SUCH THAT NO SINGLE DIMENSION EXCEEDS 50 FT. AREA BETWEEN EXPANSION JOINTS NOT TO EXCEED 320 SQ.FT.

1/2" EXPANSION PAPER SHALL BE PLACED AT ALL LOCATIONS WHERE NEW SIDEWALK ABUTS CONCRETE CURB, EXISTING SIDEWALK, LIGHT POLE BASES AND RETAINING WALLS.

SNAP-CAP EXPANSION JOINT STRIPS CAN BE USED ON ALL EXPANSION JOINTS.

ALL EXPANSION JOINTS SHALL BE SEALED.

BROOM FINISH PARALLEL TO JOINTS AND PERPENDICULAR TO TRAFFIC (IF BROOMING PATTERN NOT SHOWN).

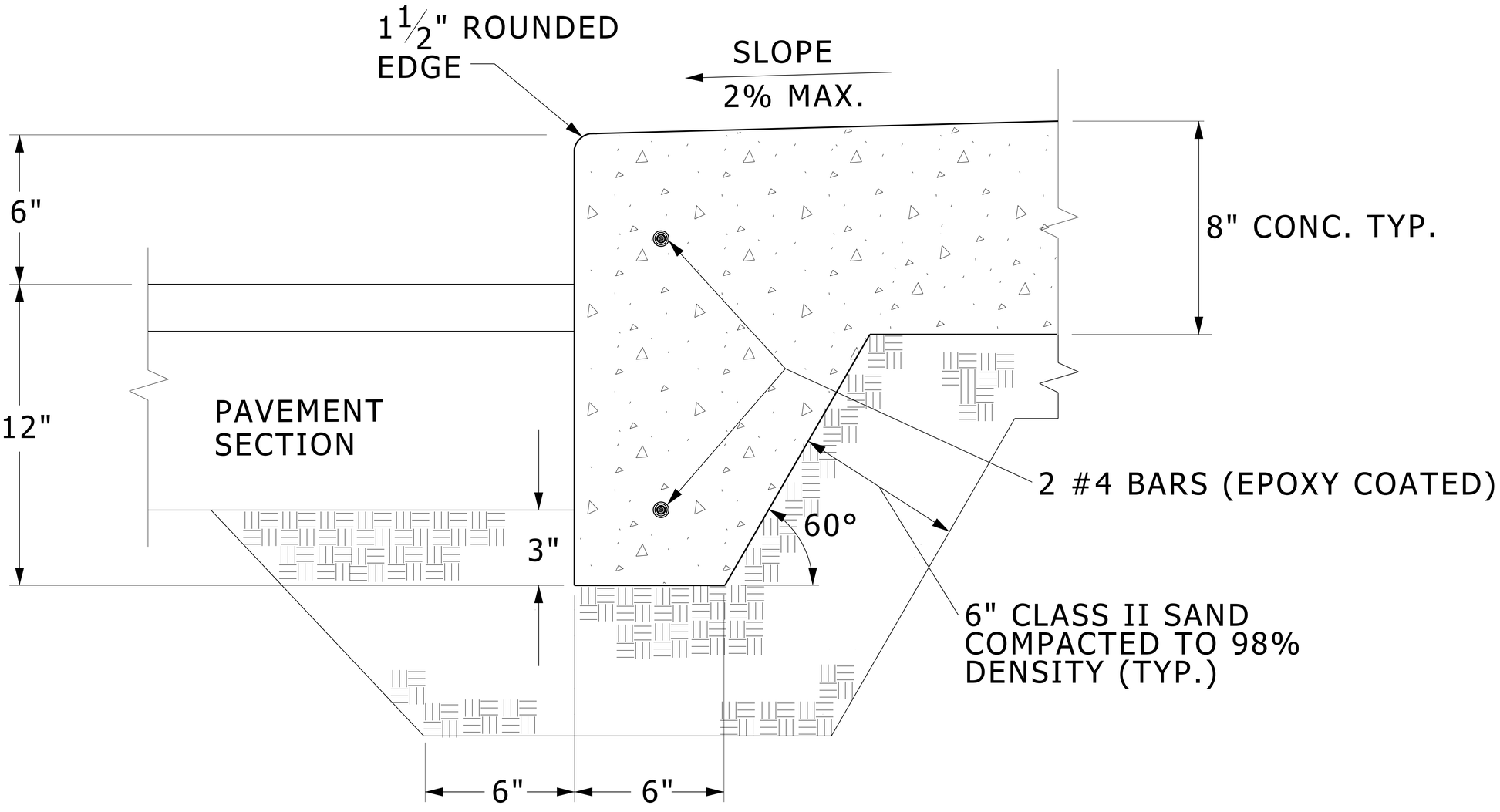

THICKENED EDGE WALK

NO SCALE

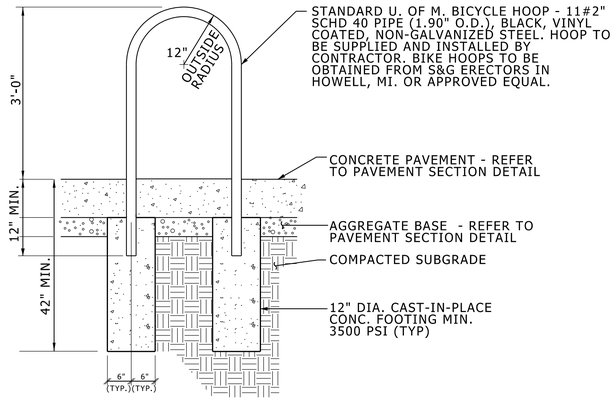

NOTE: BICYCLE HOOPS TO BE 3' O.C.

BICYCLE HOOP - CONCRETE

NO SCALE

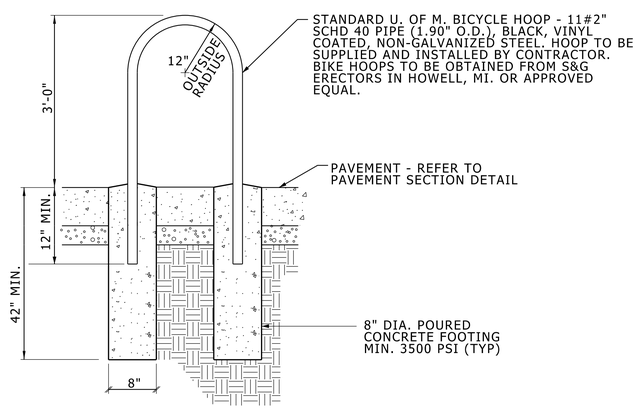

NOTE: BICYCLE HOOPS TO BE 3' O.C.

BICYCLE HOOP - CORED

NO SCALE

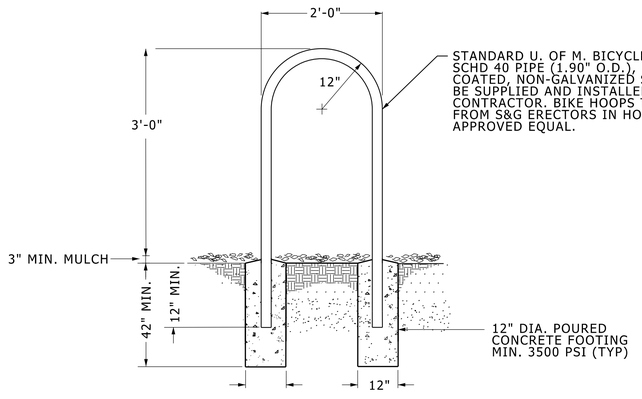

NOTE:
BICYCLE HOOPS TO BE 3' O.C.

BICYCLE HOOP - MULCH

NO SCALE

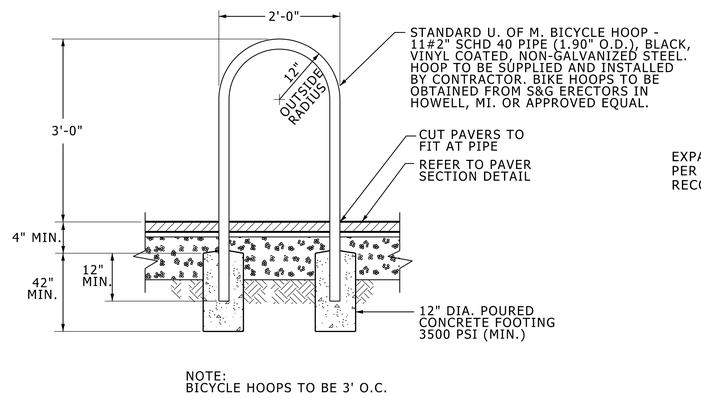

NOTE:
BICYCLE HOOPS TO BE 3' O.C.

BICYCLE HOOP - PAVERS

NO SCALE

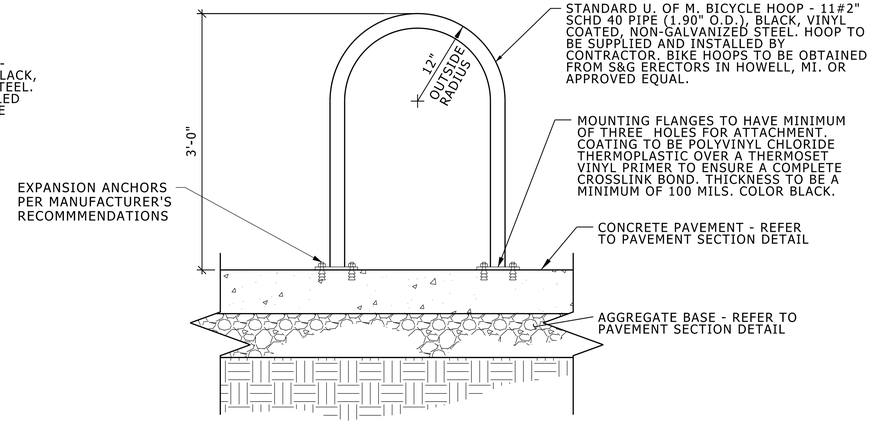

NOTE:
BICYCLE HOOPS TO BE 3' O.C.

BICYCLE HOOP - SURFACE MOUNT

NO SCALE

SD-MISC-BIKE

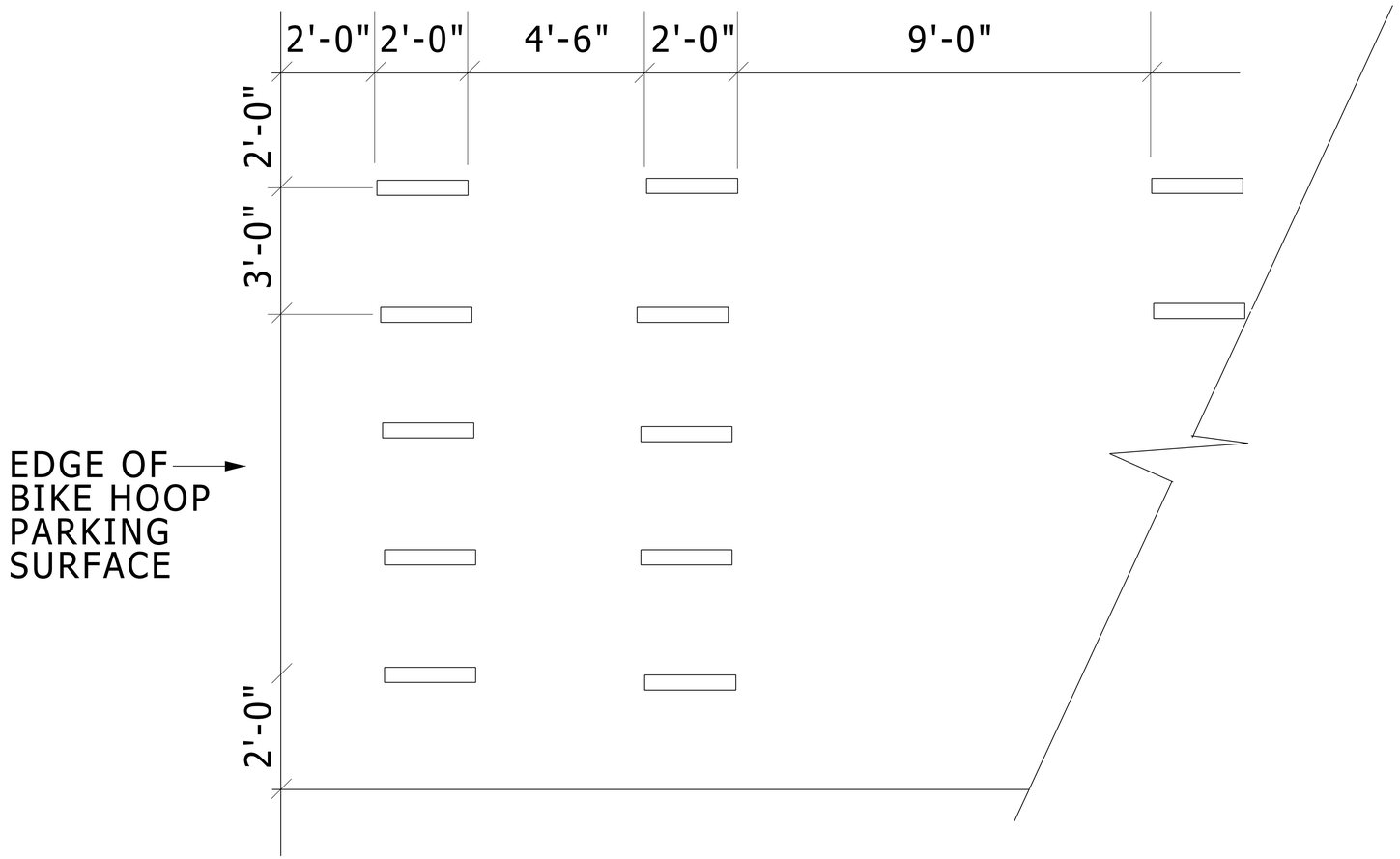

BICYCLE HOOPS - TYPICAL LAYOUT

NO SCALE

SD-MISC-BIKE_PLAN

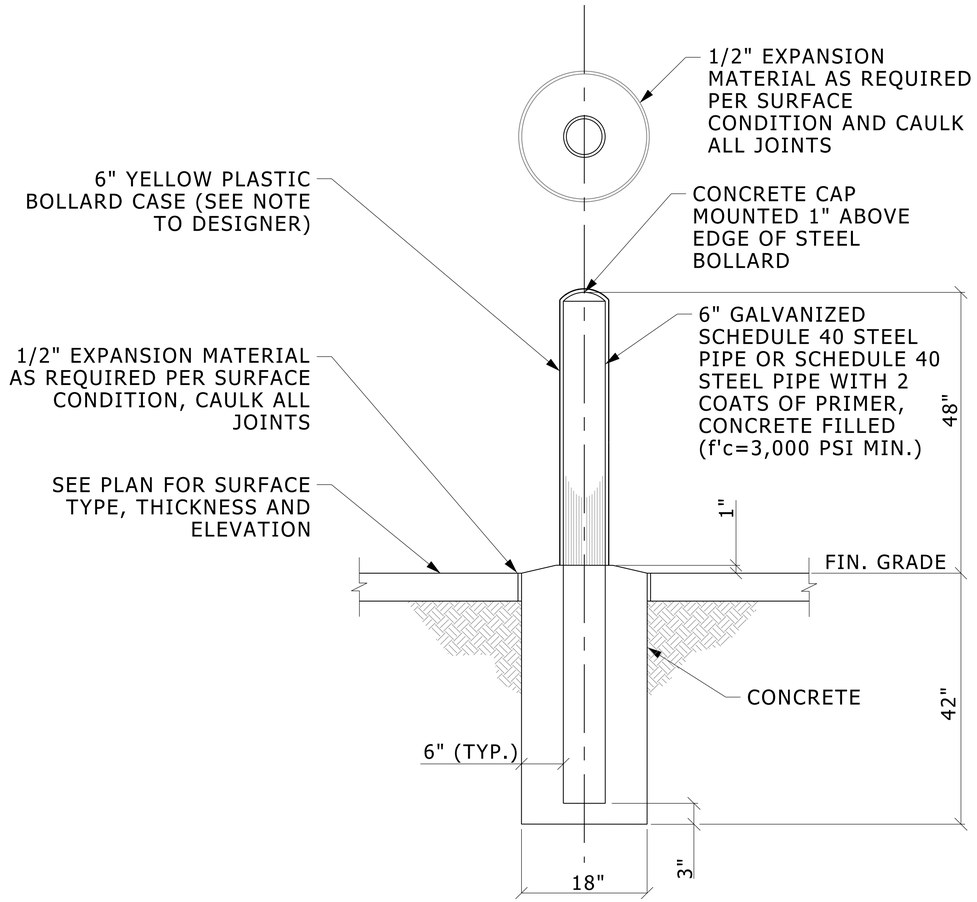

BOLLARD

NO SCALE

SD-MISC-BOLLARD

NOTE TO DESIGNER:

6" YELLOW PLASTIC BOLLARD SLIPCOVERS BY: IDEAL SHIELD AT WWW.IDEALSHIELD.COM OR POSTGUARD (YELLOW WITH BLUE STRIPING) AT WWW.POSTGUARD.COM/BOLLARDCOVERS.PH OR APPROVED EQUAL.

EDIT BASED ON PROJECT. PTS PARKING LOT STANDARD IS POSTGUARD, YELLOW WITH BLUE STRIPING.

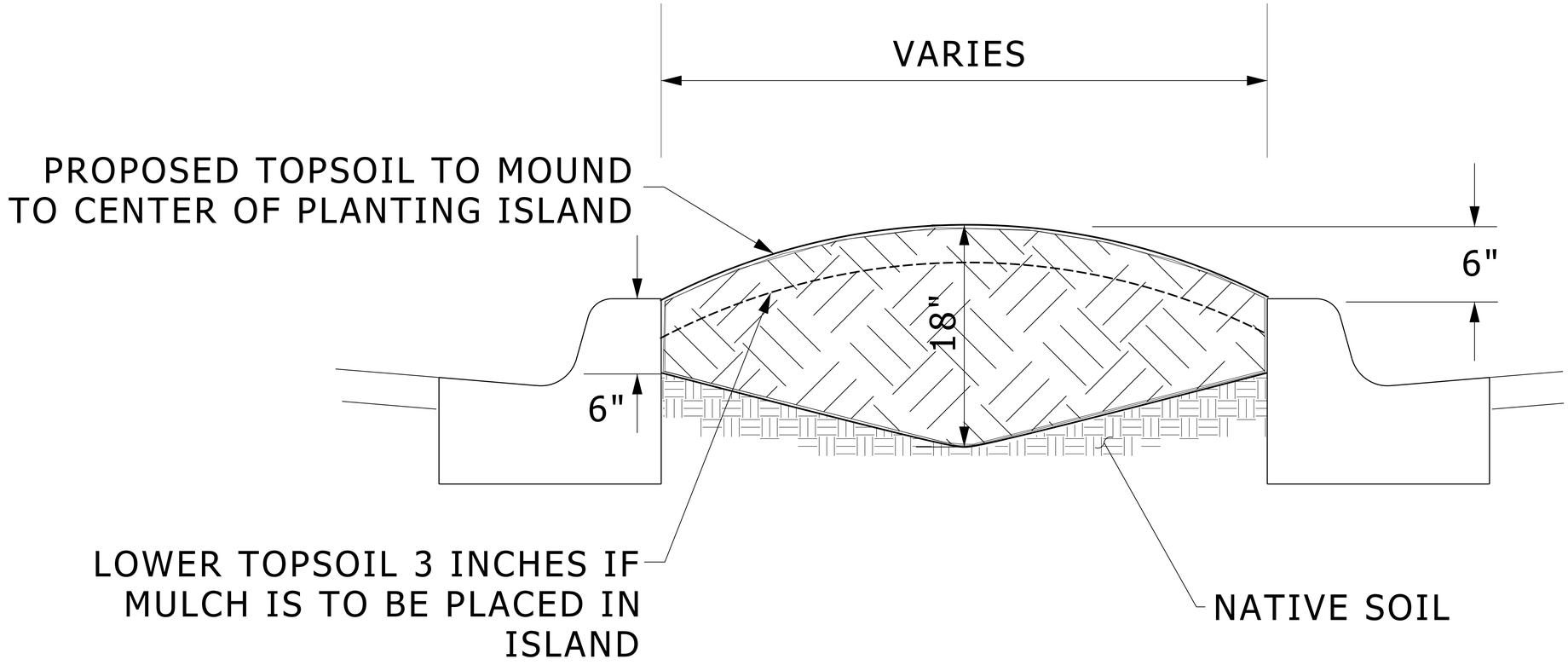

LANDSCAPE ISLAND TOPSOIL

NO SCALE

NOTE: SEE SEEDED AREA DETAIL FOR SEED MIXTURE REQUIREMENTS

SD-MISC-LANDSCAPE

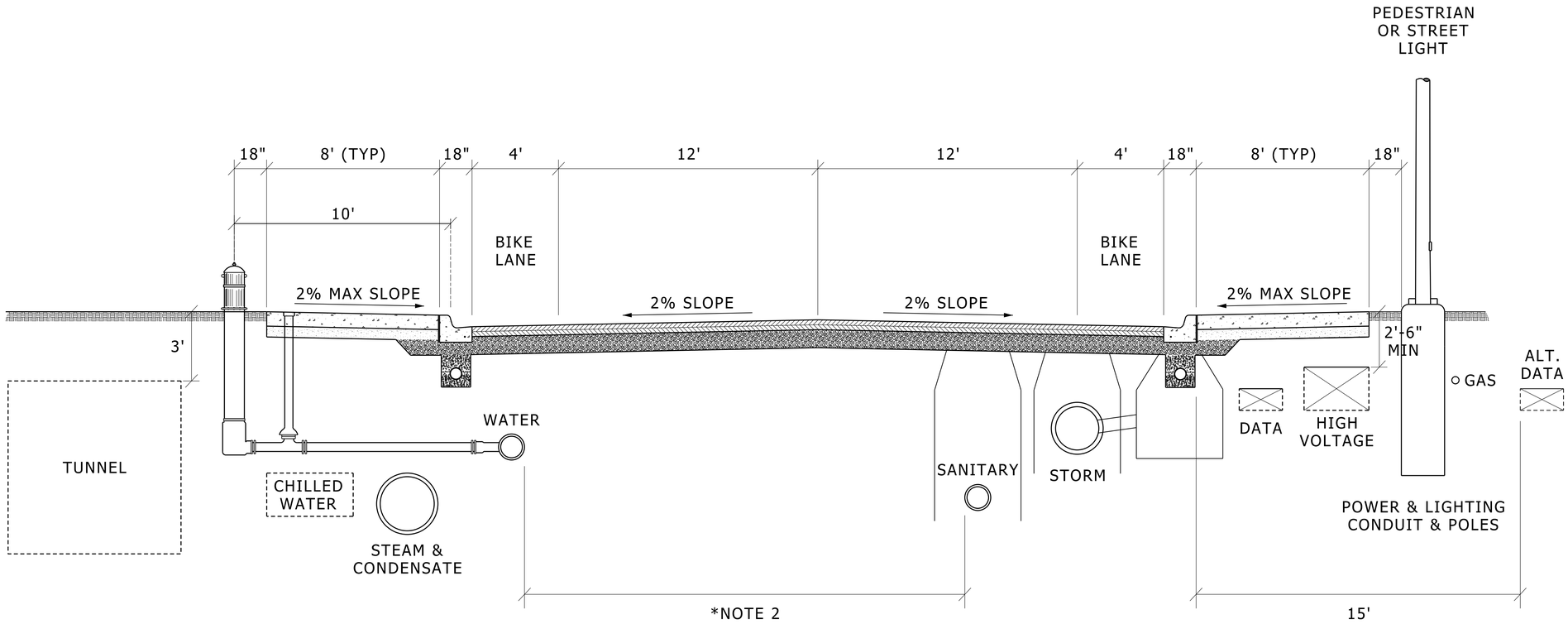

NOTES:
1. MIN. DEPTH OF SEWER TO BE 3.5'.
2. MIN. CLEARANCE FROM WATER MAIN & SANITARY TO BE 10'. HORIZONTAL AND 18" VERTICAL.
3. OTHER UTILITIES ALLOW 1:1 TRENCH SLOPE FROM DEEPER UTILITY AND 12" VERTICAL CROSSING CLEARANCE (18" CLEARANCE FROM SANITARY).

ROAD UTILITY LOCATION PLAN

SD-MISC-ROAD_UTILITY

SCALE: 1" = 10'

10' 5' 0 10'

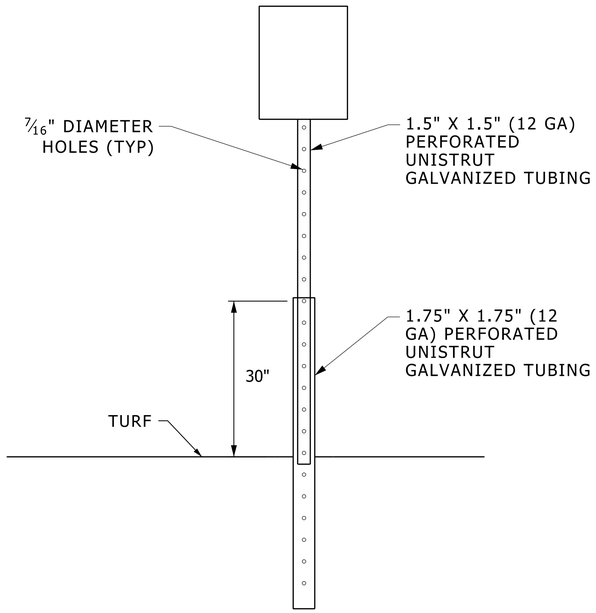

NOTE: SIGN SPECIFICATIONS AND HEIGHT TO MEET MMUTCD.

SIGN MOUNT - TURF

NO SCALE

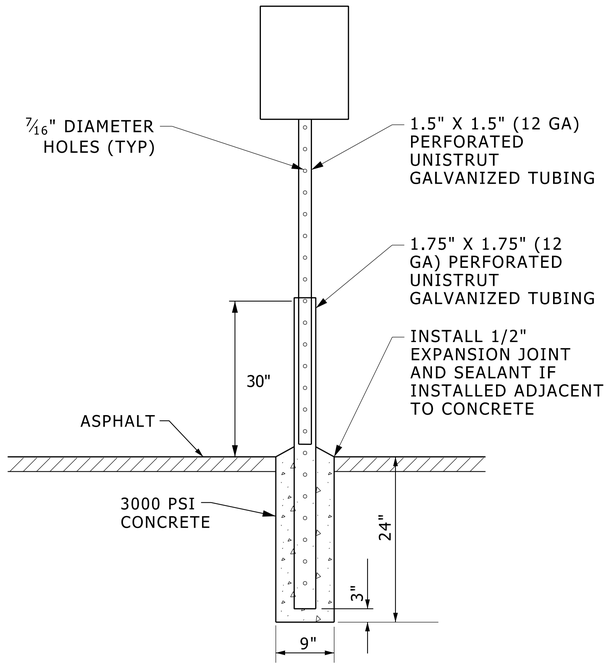

NOTE: SIGN SPECIFICATIONS AND HEIGHT TO MEET MMUTCD.

SIGN MOUNT IN ASPHALT

NO SCALE

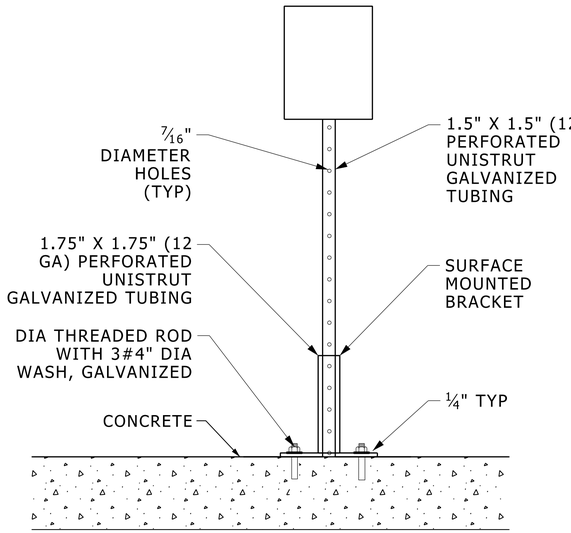

NOTE: SIGN SPECIFICATIONS AND HEIGHT TO MEET MMUTCD.

SIGN MOUNT - CONCRETE SURFACE

NO SCALE

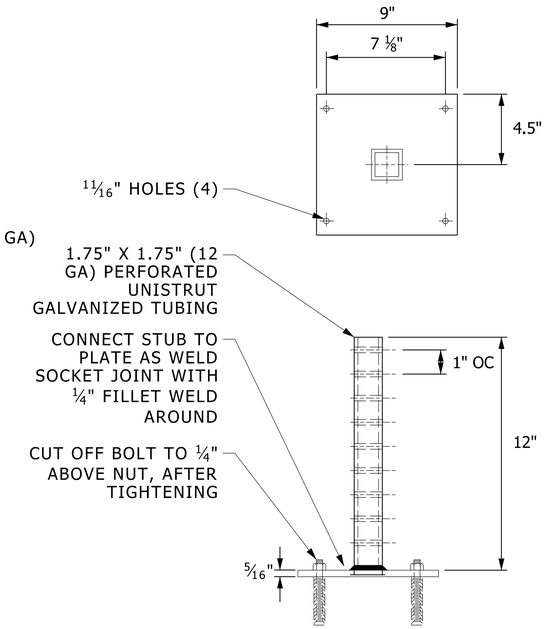

SURFACE MOUNT BASE AND SECTION

SD-MISC-SIGN_MOUNT

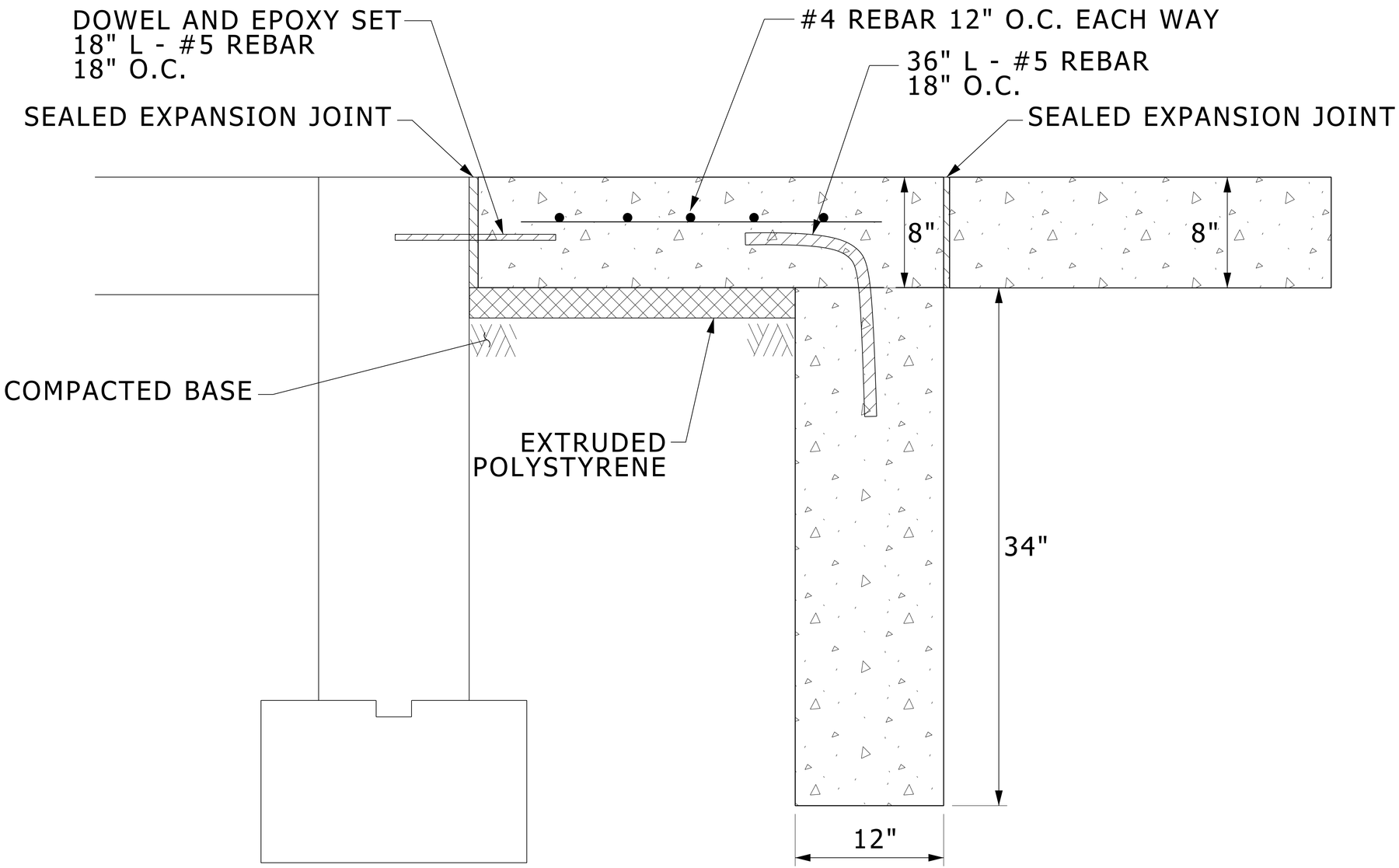

FROST FREE STOOP

NO SCALE

SD-MISC-STOOP

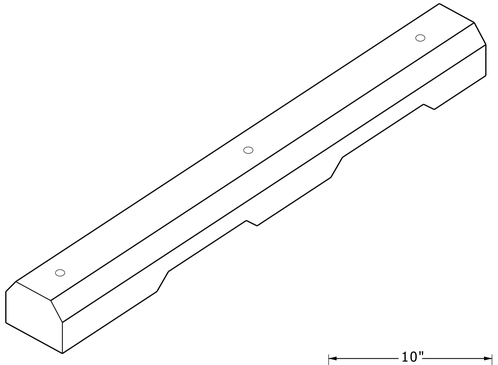

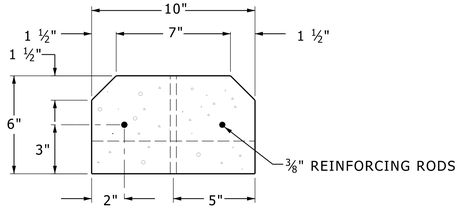

SECTION

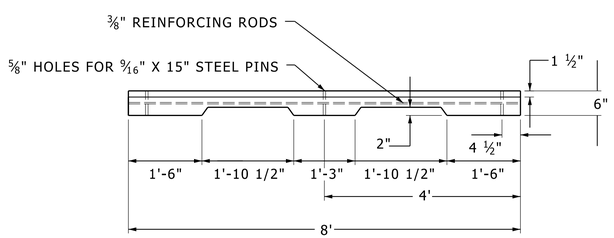

LONGITUDINAL ELEVATION

8' CONCRETE WHEEL STOP

NO SCALE

NOTE TO DESIGNER:
DRAIN TYPE 8'. 10" WIDE, 6" HIGH. TWO ⅜" REINFORCEMENT RODS. TWO 9/16"x15" HOLDER PINS WEIGHT 300 LBS.

SUPPLIERS:
1. AMERICAN EAGLE
313-444-8391
SALES@AMERICANEAGLEPRECAST.COM
2. BUSH CONC. PRODUCTS
231-733-1904
INFO@BUSHCONCRETEPRODUCTS.COM
3. OR APPROVED EQUAL

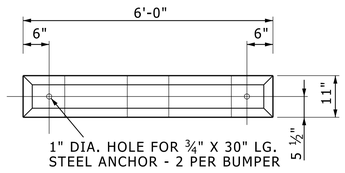

PLAN

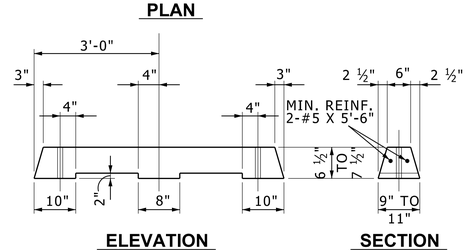

ELEVATION **SECTION**

6' CONCRETE WHEEL STOP

NO SCALE SECTION, ELEVATION, PLAN

SD-MISC-WHEEL_STOPS

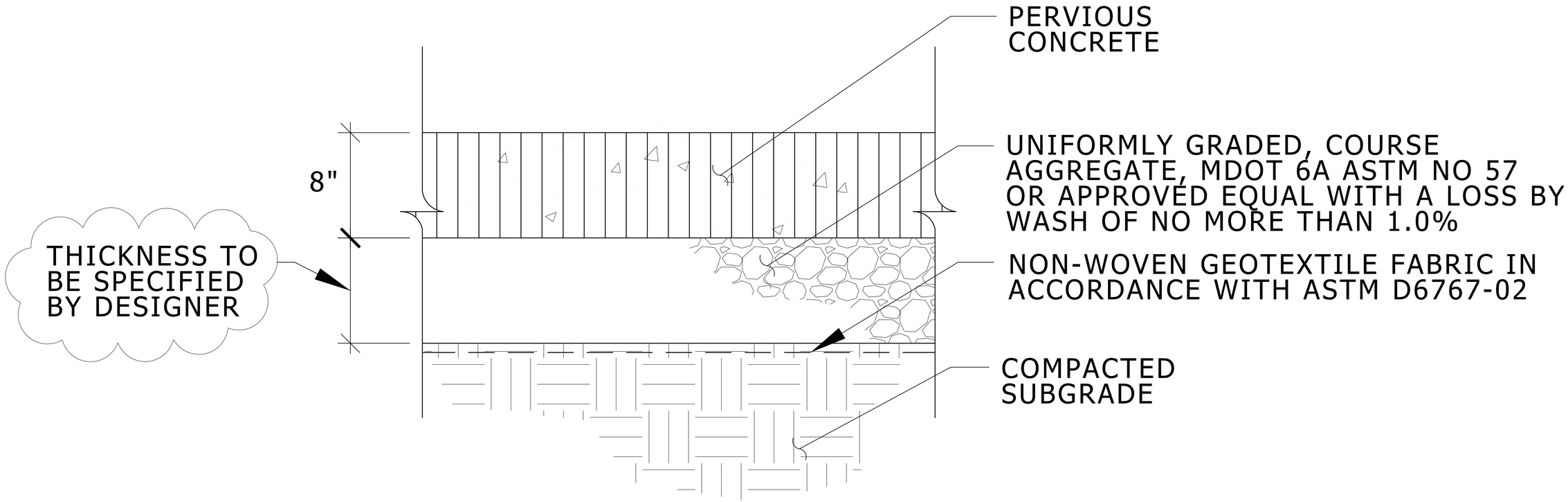

PERVIOUS CONCRETE DETAIL

NO SCALE

SD-PVMT-CONC_PERV

NOTE TO DESIGNER:
1. PRODUCTS & SPECS SHALL MEET OR EXCEED MICHIGAN CONCRETE INSTITUTE REQUIREMENTS
2. THICKNESS OF AGG BASE TO BE BASED ON GEOTECHNICAL DATA AND ENGINEERED STORM WATER STORAGE REQUIREMENTS

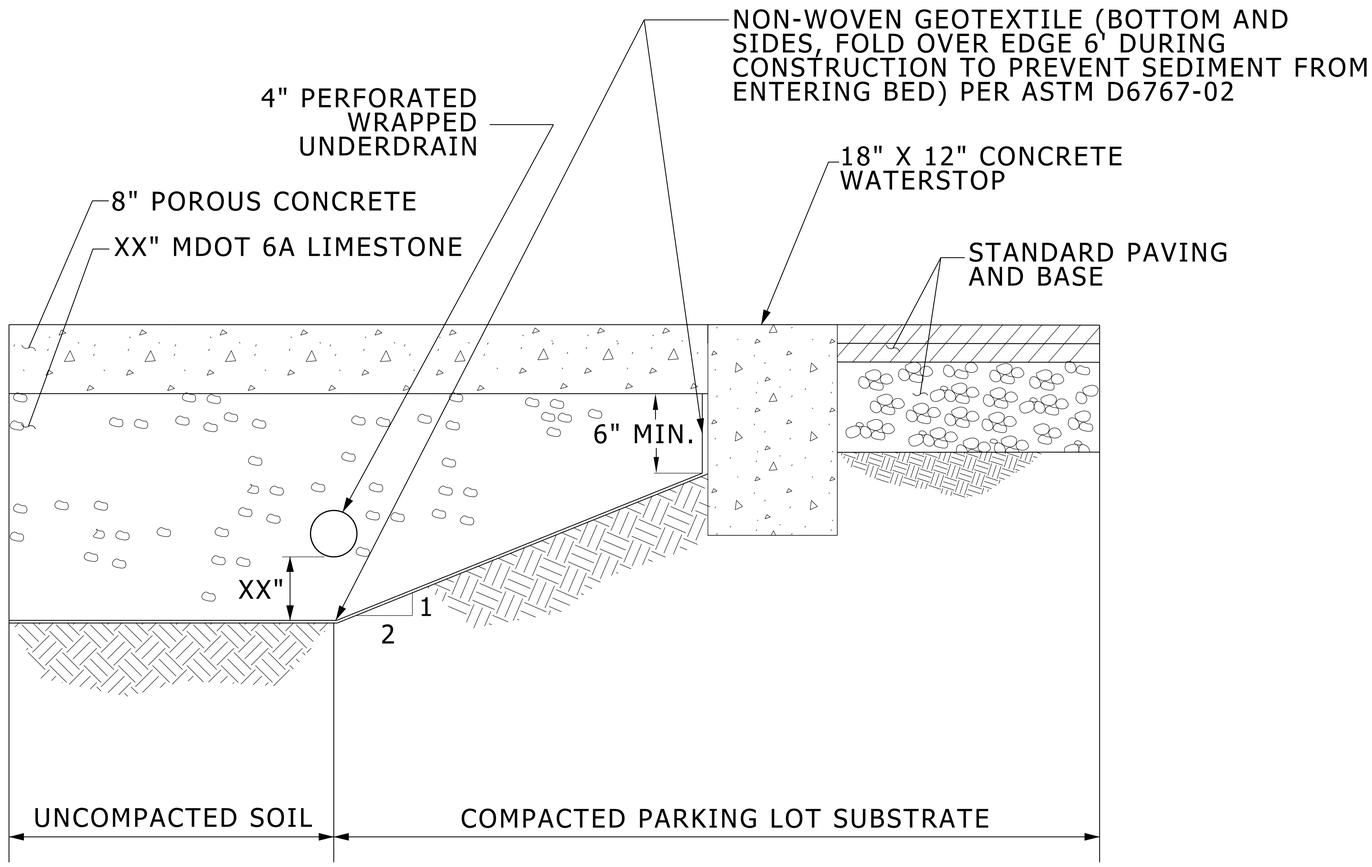

NOTE: INSTALL WATERSTOP BETWEEN PERVIOUS PAVEMENT AND STANDARD PAVEMENT AREAS

PERVIOUS CONCRETE WITH WATERSTOP

NO SCALE

NOTE TO DESIGNER:
1. PRODUCTS & SPECS SHALL MEET OR EXCEED MICHIGAN CONCRETE INSTITUTE REQUIREMENTS
2. THICKNESS OF AGG BASE TO BE BASED ON GEOTECHNICAL DATA AND ENGINEERED STORM WATER STORAGE REQUIREMENTS

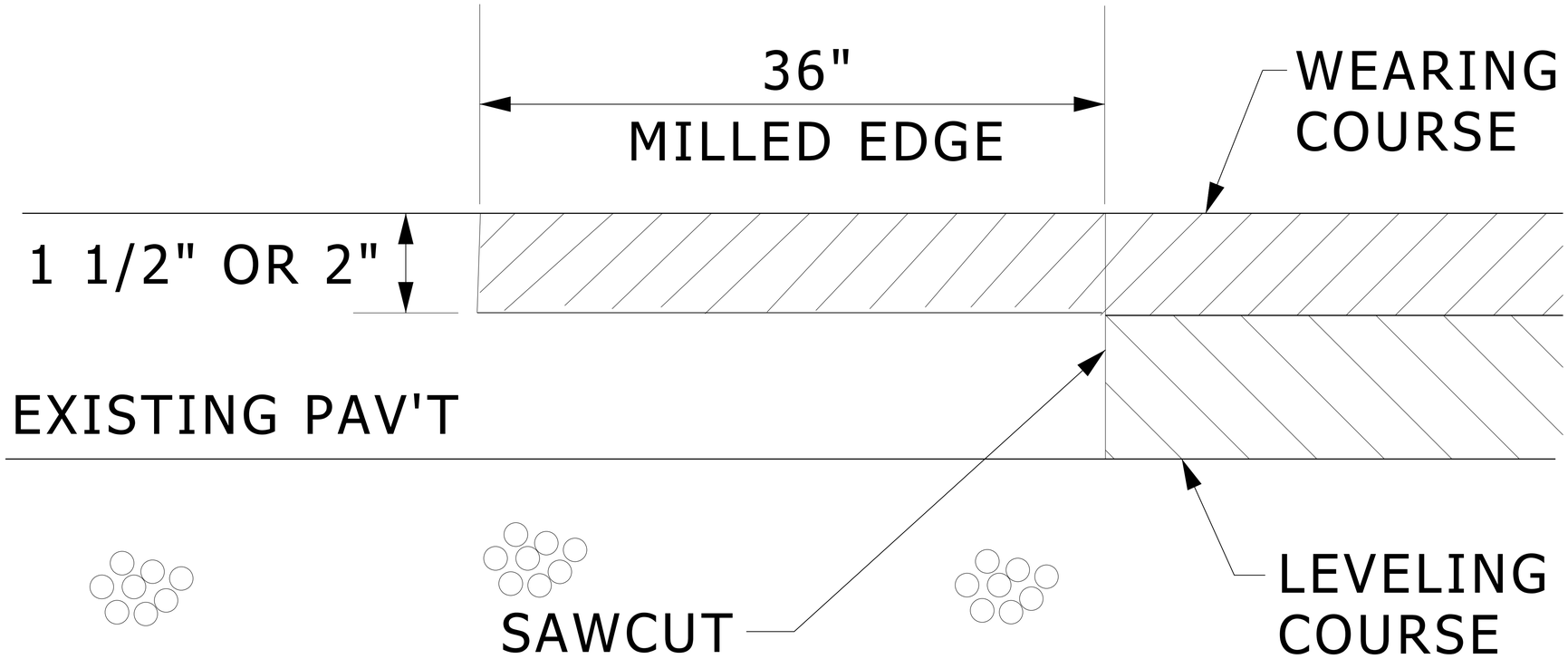

MILLED EDGE

NO SCALE

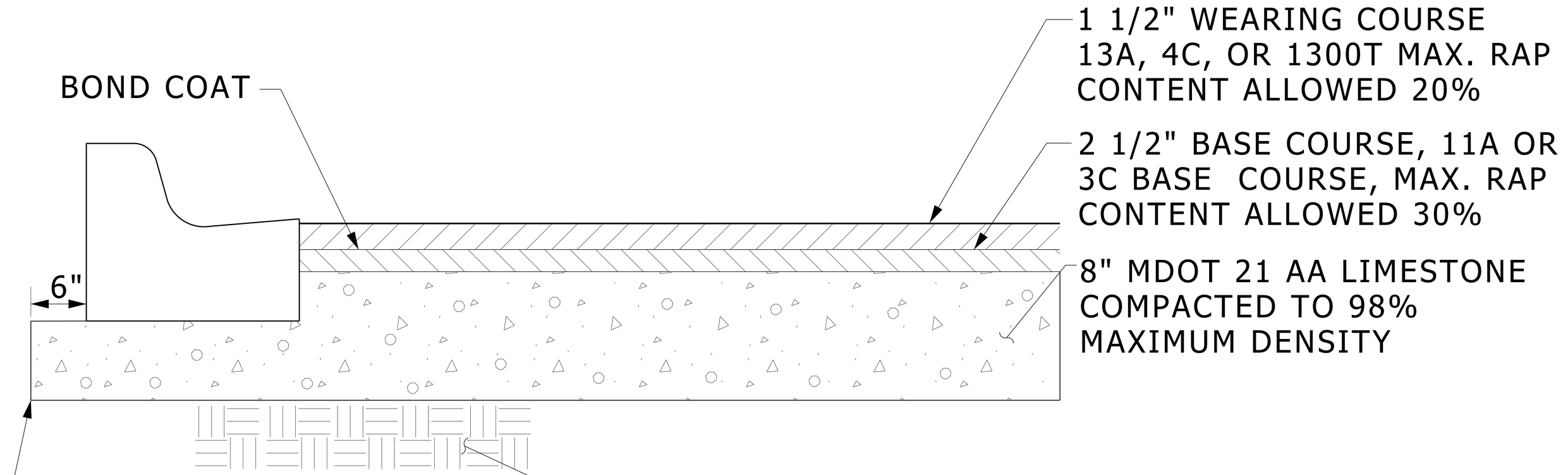

PARKING LOT PAVEMENT

NO SCALE

SD-PVMT-PKG_LOT

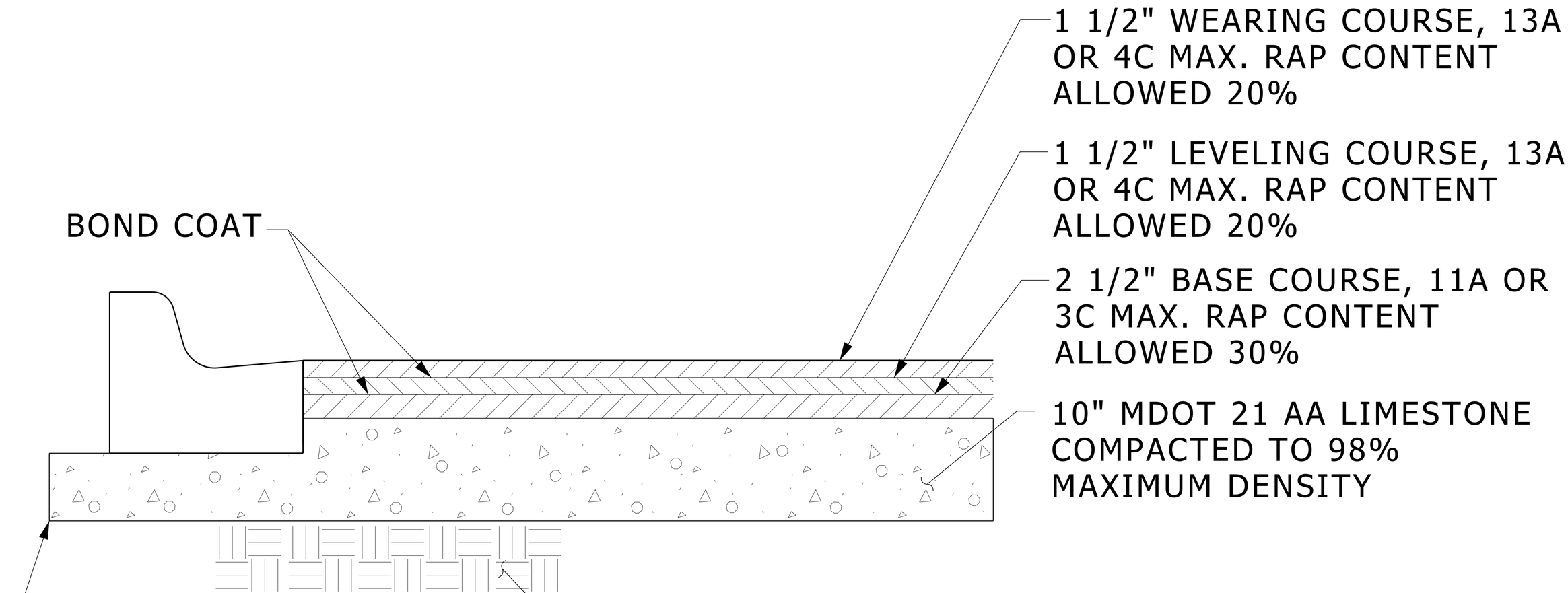

ROAD PAVEMENT

NO SCALE

SD-PVMT-ROAD_ASP

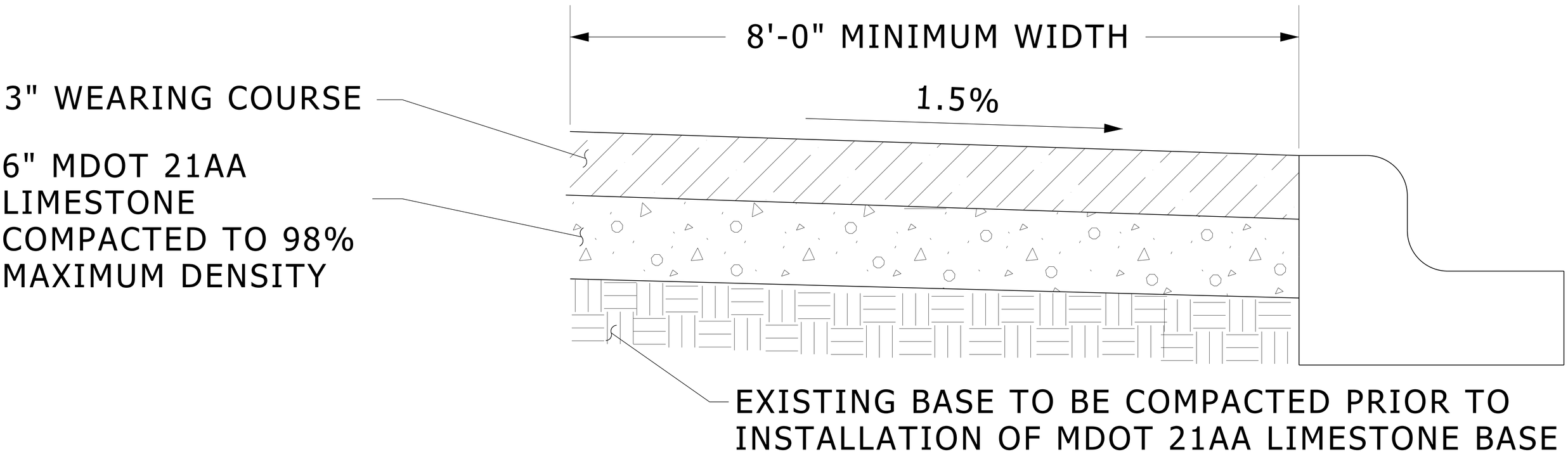

BITUMINOUS WALK PATH

NO SCALE

SD-PVMT-WLK_PATH

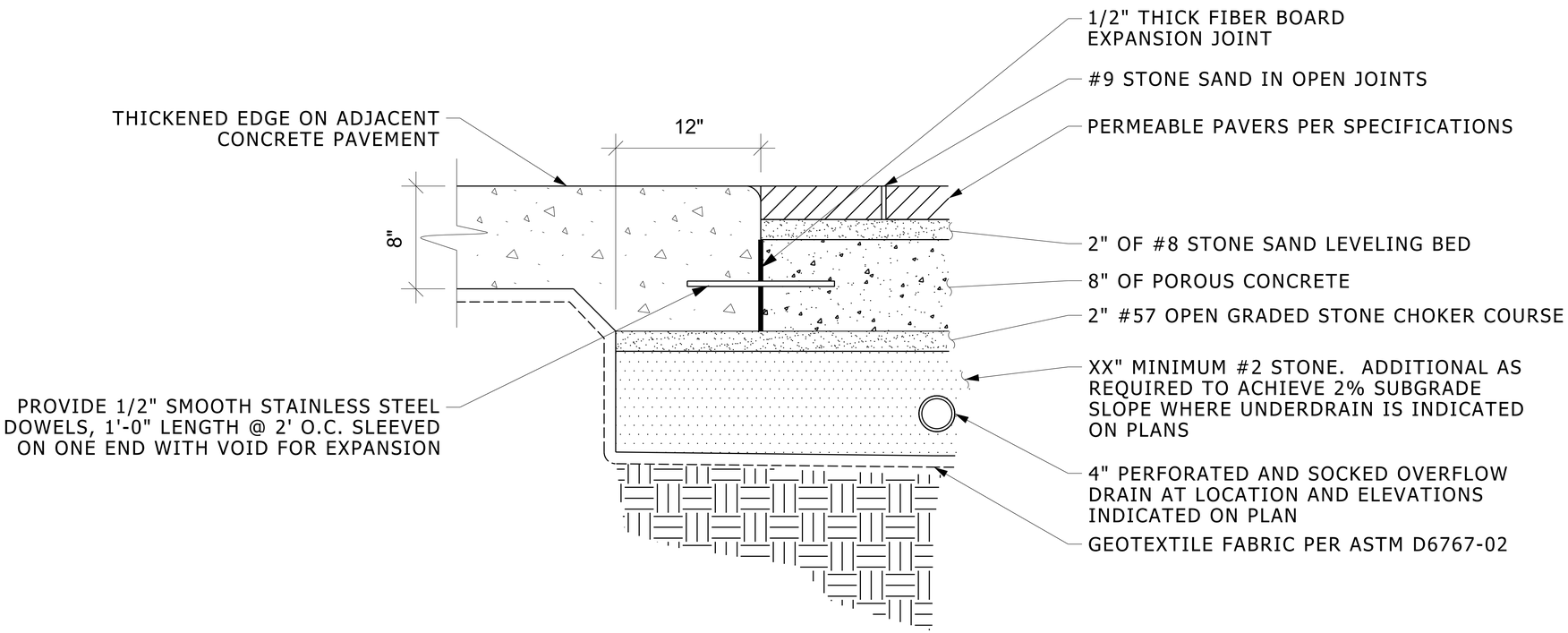

PAVER - PERMEABLE SYSTEM ON POROUS CONCRETE

NOT TO SCALE

NOTE TO DESIGNER (NOT TO BE PRINTED WITH DETAIL):

1. DEPTH OF #2 STONE IS TO BE ENGINEERED BASED ON GEOTECHNICAL EVALUATION OF SOILS AND INFILTRATION NEEDS.
2. ELEVATION OF OVERFLOW DRAIN IS TO BE ENGINEERED TO ACCOMMODATE INFILTRATION NEEDS.
3. PROVIDE POSITIVE DRAINAGE AS A STORM SAFETY FACTOR, WHEN POSSIBLE.
4. USE 8" POROUS CONCRETE FOR HEAVY TRAFFIC, 6" POROUS CONCRETE FOR PEDESTRIAN TRAFFIC.

SD-PAVER-POR_PERM

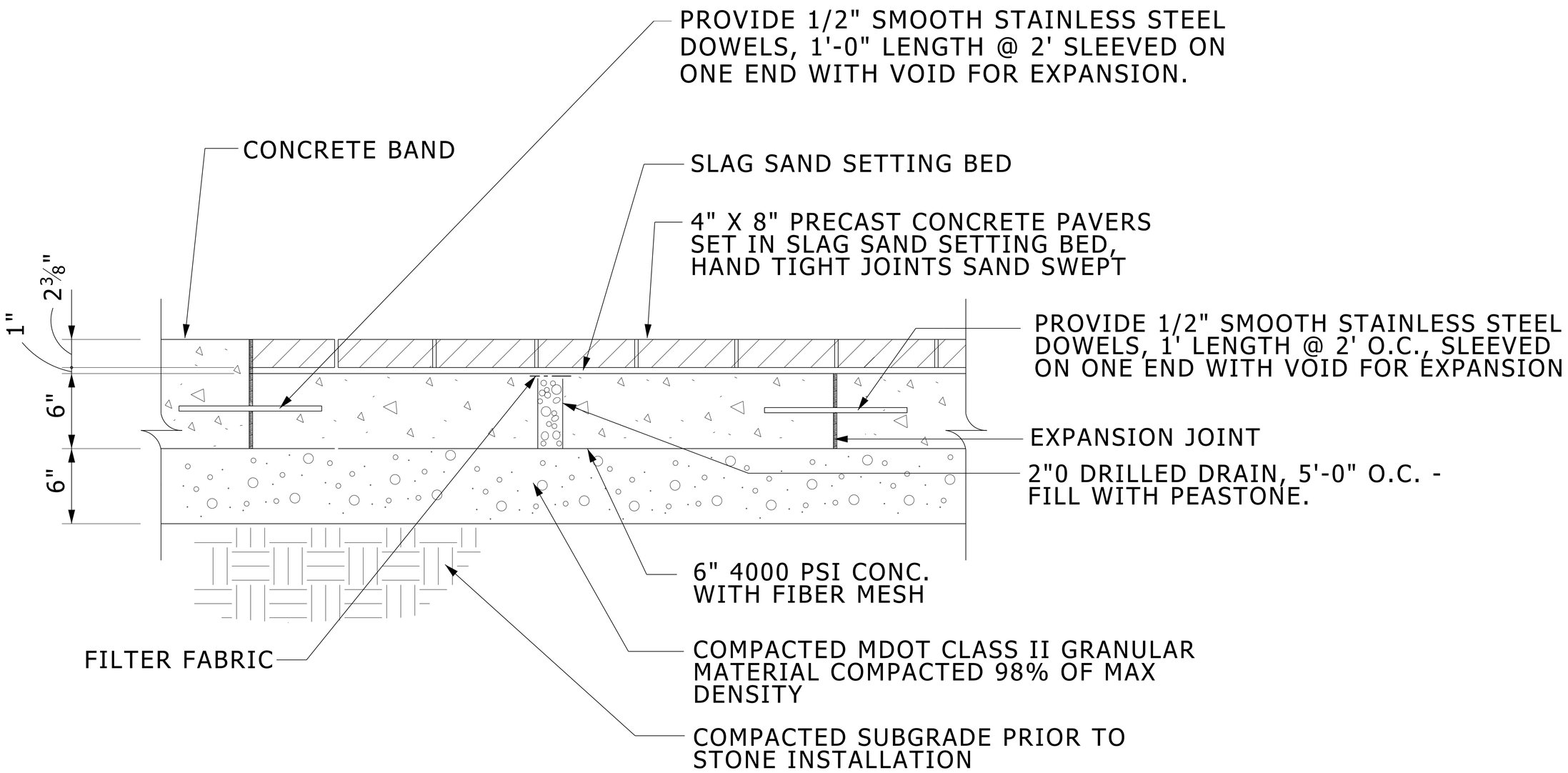

PRECAST PAVER ON CONCRETE BASE

NO SCALE

SD-PAVER-PRECAST_CONC

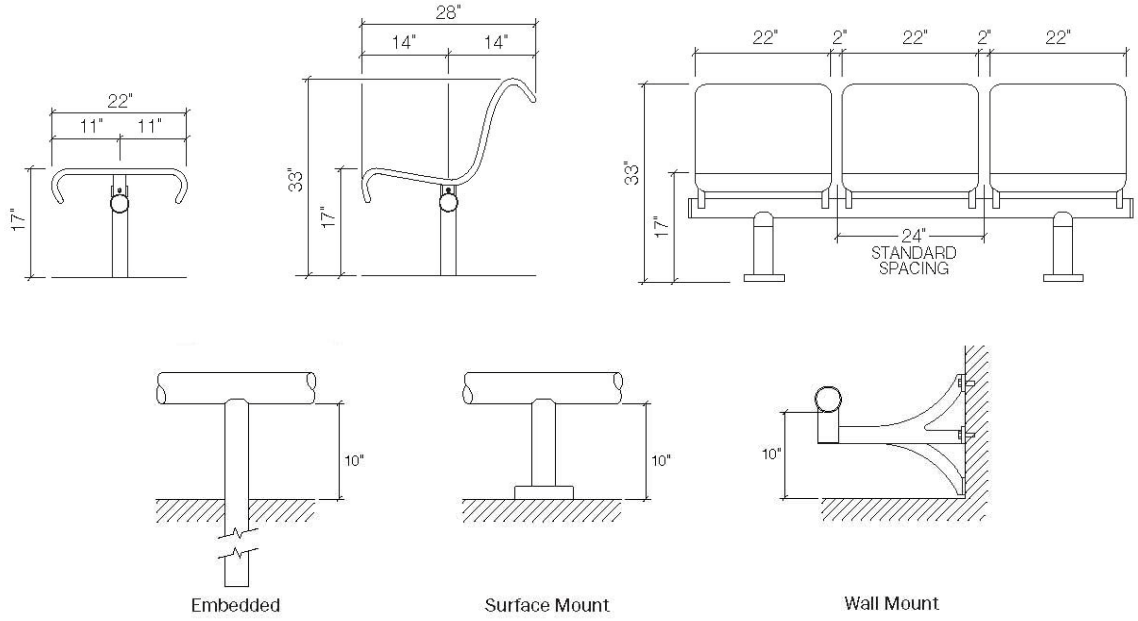

BENCH OBTAINED FROM: LANDSCAPE FORMS IN KALAMAZOO, MI;
MODEL: PLEXUS II

BLACK POWDERCOAT IS PREFERABLE.

FOR SURFACE MOUNTED BENCHES, LOCATE ON AND ANCHOR TO PAVEMENT. BENCHES SHOULD BE SET WITH A MINIMUM SETBACK OF 12-16" FROM THE EDGE OF LAWN TO REDUCE DAMAGE FROM MAINTENANCE EQUIPMENT.

OTHER MANUFACTURERS: VICTOR STANLEY IN DUNKIRK, MD; SITESCAPES IN LINCOLN, NE; AND FORMS + SURFACES IN PITTSBURGH, PA.

BENCH SEATING

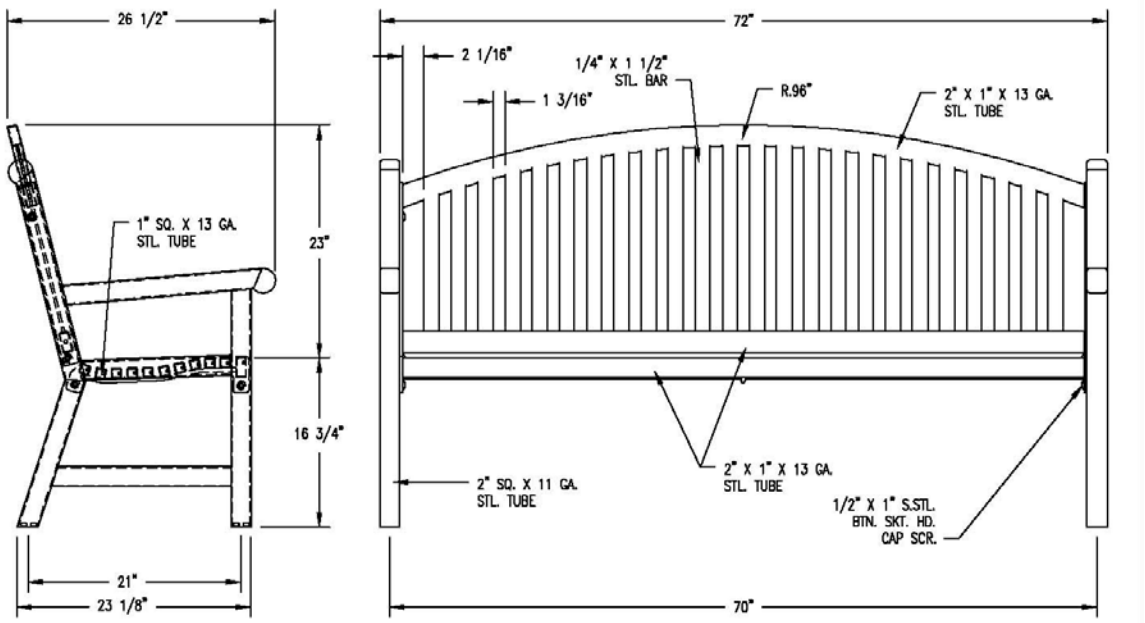

MEMORIAL BENCH OBTAINED FROM: DUMOR IN MIFFLINTOWN, PA
MODEL: STEEL 118-60/S-2

BLACK POWDERCOAT IS PREFERABLE.

OTHER MANUFACTURERS: LANDSCAPE FORMS IN KALAMAZOO, MI; VICTOR STANLEY IN DUNKIRK, MD; AND FORMS + SURFACES IN PITTSBURGH, PA.

REFER TO MEMORIAL BENCH GUIDELINES FOR MORE DETAILED INFORMATION
http://www.umaec.umich.edu/eedr/Guidelines%20for%20memorial%20benches%20FINAL%20July%202005.pdf

MEMORIAL BENCH

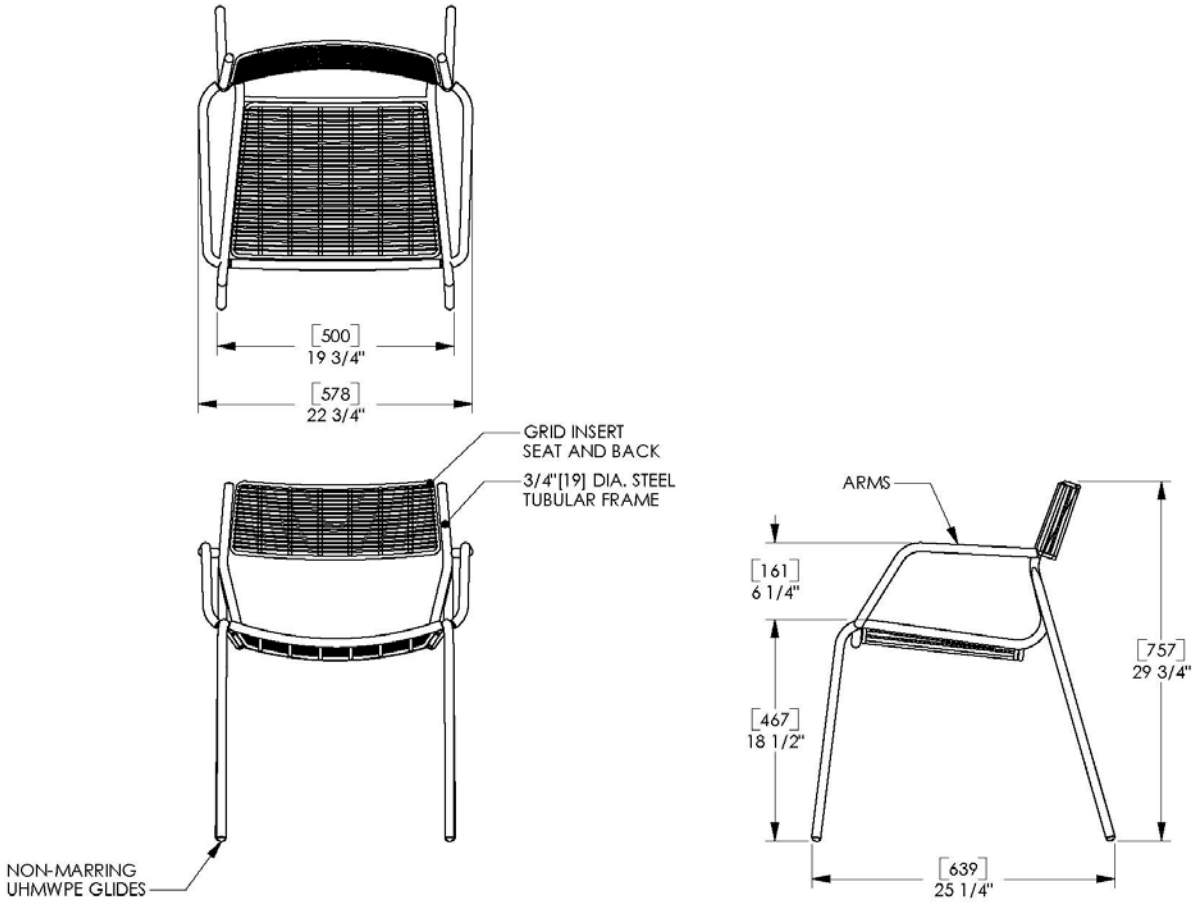

CHAIR OBTAINED FROM: LANDSCAPE FORMS IN KALAMAZOO, MI;
MODEL: VERONA (FREE STANDING ARM CHAIR RECOMMENDED)

BLACK POWDERCOAT IS PREFERABLE.

IN UNSECURED LOCATIONS, AFFIX TO THE PAVEMENT WITH A MINIMUM SETBACK OF 12-16” FROM THE EDGE OF LAWN TO REDUCE DAMAGE FROM MAINTENANCE EQUIPMENT.

OTHER MANUFACTURERS: VICTOR STANLEY IN DUNKIRK, MD; SITESCAPES IN LINCOLN, NE; AND FORMS + SURFACES IN PITTSBURGH, PA.

CHAIR

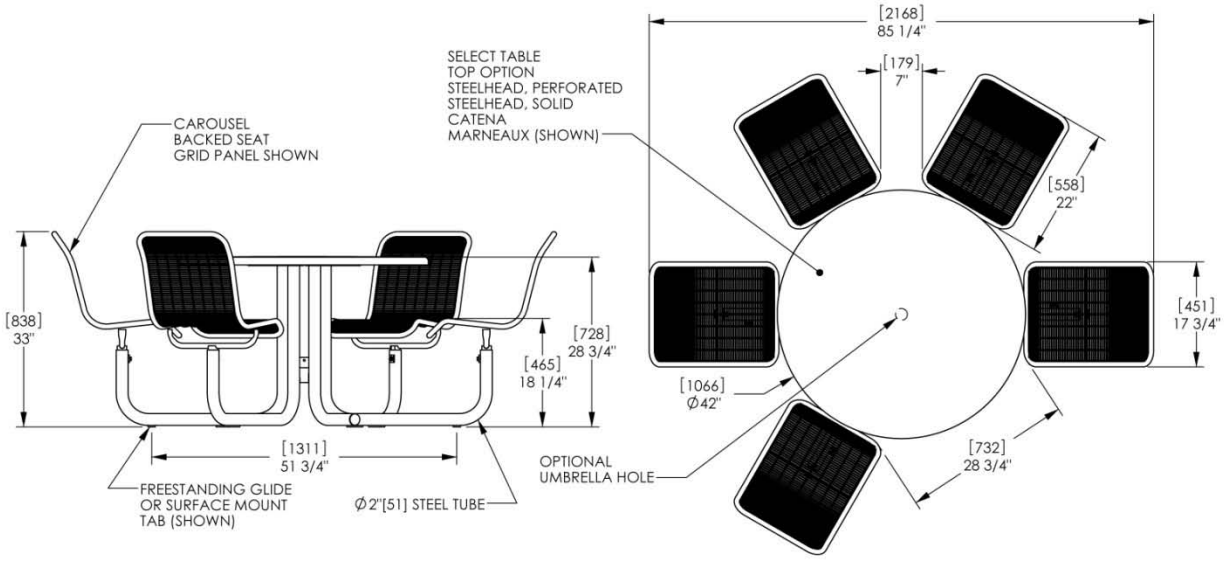

TABLE OBTAINED FROM: LANDSCAPE FORMS IN KALAMAZOO, MI;
MODEL: CAROUSEL

BLACK POWDERCOAT IS PREFERABLE. UMBRELLA IS OPTIONAL IN CERTAIN CIRCUMSTANCES.

FREESTANDING TABLES SHOULD BE LOCATED ON PAVEMENT. CAFÉ TABLES SHOULD BE LOCATED ON AND ANCHORED TO PAVEMENT. TABLES SHOULD BE SET WITH A MINIMUM SETBACK OF 12-16” FROM EDGE OF LAWN TO REDUCE DAMAGE FROM MAINTENANCE EQUIPMENT.

OTHER MANUFACTURERS: VICTOR STANLEY IN DUNKIRK, MD; SITESCAPES IN LINCOLN, NE; AND FORMS + SURFACES IN PITTSBURGH, PA.

TABLE

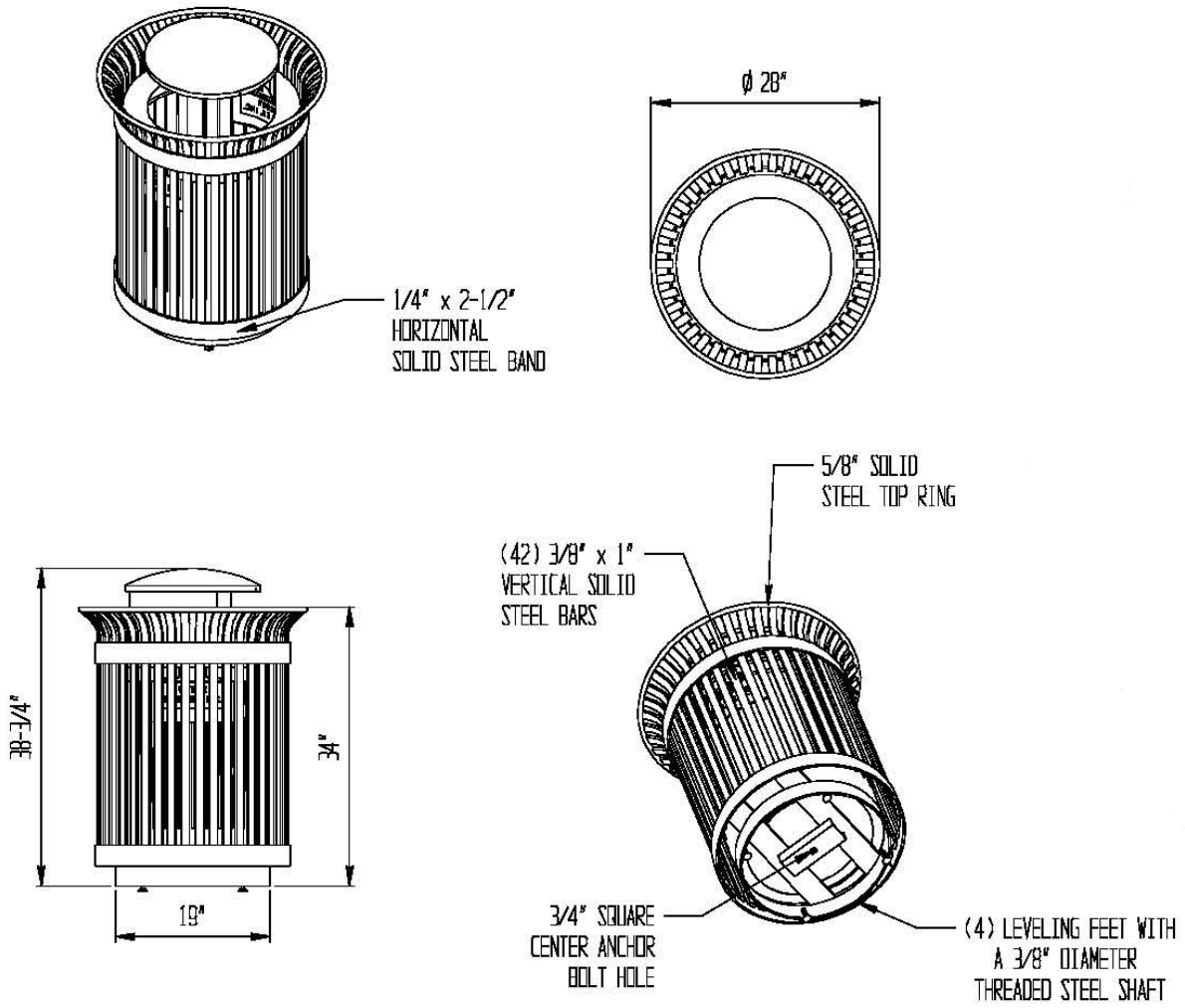

TRASH RECEPTACLE OBTAINED FROM: VICTOR STANLEY IN DUNKIRK, MD
MODEL: IRONSITES S-424

BLACK POWDERCOAT IS PREFERABLE.

OTHER MANUFACTURERS: LANDSCAPE FORMS IN KALAMAZOO, MI; SITESCAPES IN LINCOLN, NE; AND FORMS + SURFACES IN PITTSBURGH, PA.

TRASH RECEPTACLE

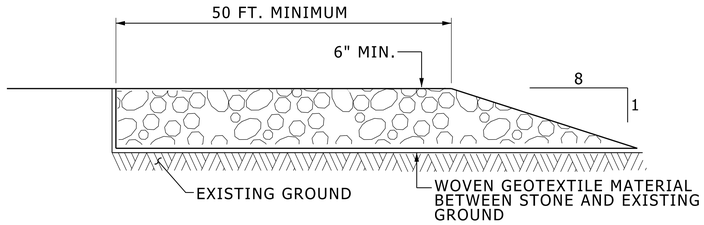

SECTION

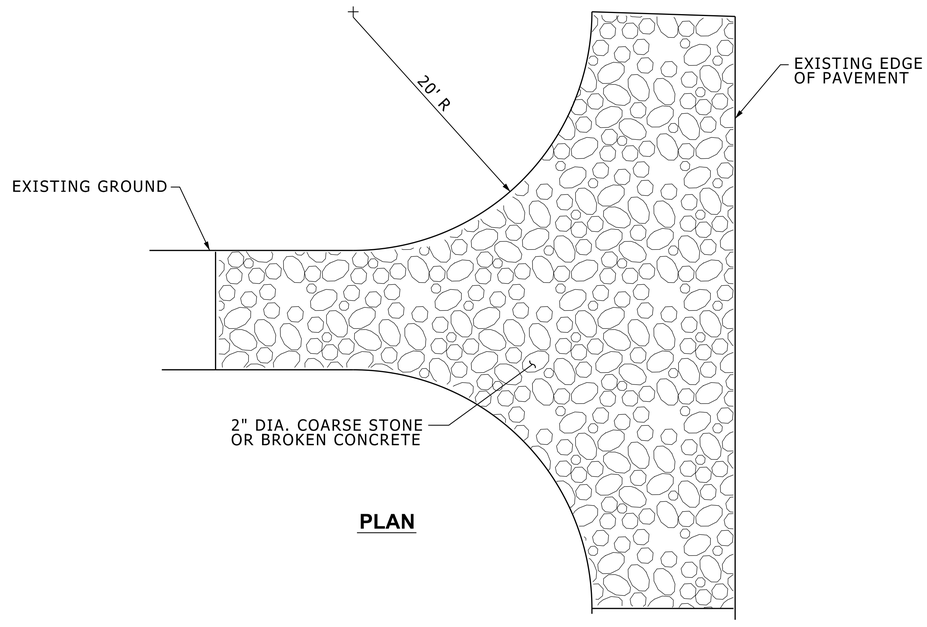

PLAN

NOTE:
CONTRACTOR TO INSTALL & MAINTAIN ANTI-TRACKING PAD.

WHEN AGGREGATE BECOMES SATURATED WITH FINES, CONTRACTOR TO SCARIFY AND RELAY AGGREGATE.

ANTI-TRACKING PAD DOES NOT RELIEVE CONTRACTOR FROM SWEEPING AND CLEANING ADJACENT WALKS AND ROADS.

CRUSHED/BROKEN CONCRETE IS TO BE REMOVED AND LEGALLY DISPOSED OF OFF U-M PROPERTY UPON PROJECT COMPLETION.

ANTI-TRACKING PAD

NO SCALE

SD-SESC-ANTI_TRACK

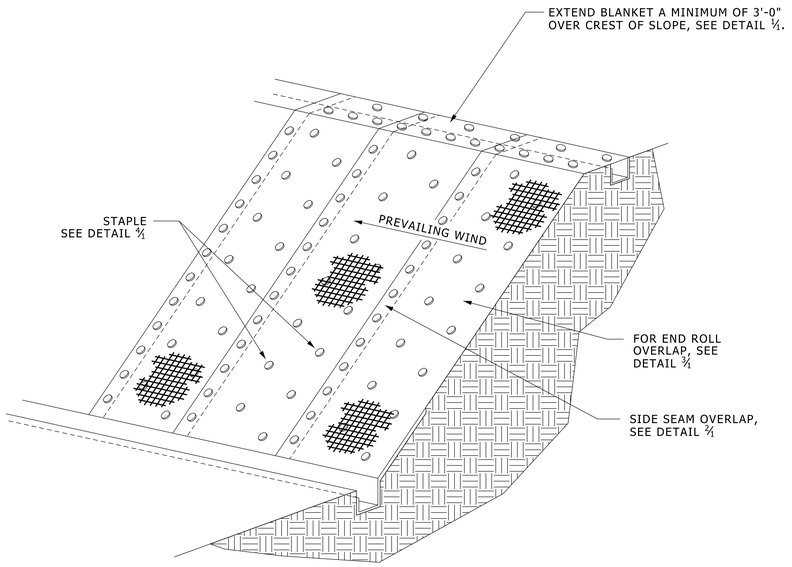

PERSPECTIVE

FIGURE 1: OVERVIEW OF EROSION CONTROL BLANKET

NOTES:
1. PREPARE SUBGRADE TO PROPER GRADE AND COMPACTION REQUIREMENTS.
2. REMOVE RUTS, ROOTS, SOIL CLODS, OR OTHER DEBRIS FROM SURFACE SUBJECT TO MULCH BLANKET INSTALLATION.
3. SPREAD OR DRILL SEED.
4. INSTALL BLANKET AT TOP OF SLOPE, FIRST ANCHORING TOE IN TRENCH 6" WIDE X 6" DEEP, PROGRESSING DOWN-SLOPE OR DOWN-GRADIENT WITH APPROXIMATELY 36" OF BLANKET EXTENDED BEYOND THE UP-SLOPE PORTION OF THE TRENCH.
5. ANCHOR THE BLANKET WITH STAPLES/STAKES PLACED APPROXIMATELY 12" APART IN THE BOTTOM OF THE TRENCH. BACKFILL AND COMPACT THE TRENCH AFTER SECURING.
6. APPLY SEED TO COMPACTED SOIL AND FOLD 12" PORTION OF THE BLANKET OVER COMPACTED AREA AND SECURE WITH A ROW OF STAPLES/STAKES PLACED 12" APART ACROSS THE WIDTH OF THE BLANKET.
7. UNROLL THE BLANKETS DOWN OR HORIZONTALLY ACROSS THE SLOPE.

PRODUCT SELECTION:

FOR SLOPES OF 3:1 + 4:1 AND FLOW RATES OF LESS THEN 1.52 FT/SEC (12 MONTH OR LESS DEVIATION) USE NORTH AMERICAN GREEN S75BN OR APPROVED EQUAL.

FOR SLOPES OF 3:1 + 2:1 AND FLOW RATES OF LESS THEN 1.85 FT/SEC (12 MONTH OR LESS DEVIATION) USE NORTH AMERICAN GREEN S150BN OR APPROVED EQUAL.

FOR SLOPES OF 2:1 + 1:1 AND FLOW RATES OF LESS THEN 2.44 FT/SEC (18 MONTH OR LESS DEVIATION) USE NORTH AMERICAN GREEN SC150BN OR APPROVED EQUAL.

FOR SLOPES OF 1:1 OR GREATER AND FLOW RATES OF LESS THEN 3.05 FT/SEC (24 MONTH OR LESS DEVIATION) USE NORTH AMERICAN GREEN C125BN OR APPROVED EQUAL.

SLOPE CREST ANCHOR METHOD "A" (NO TRENCH)

1/1

NO SCALE

DO NOT NEED TO TRENCH BLANKET IN IF IT CAN BE EXTENDED A MINIMUM OF 3'-0" OVER THE CREST OF THE SLOPE.

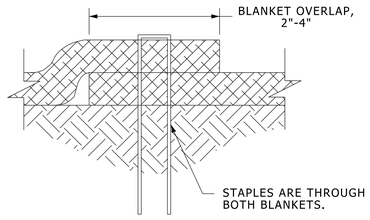

SIDE SEAM OVERLAP STAPLE DETAIL

2/1

NO SCALE

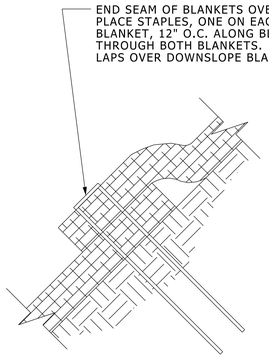

END ROLL OVERLAP

3/1

NO SCALE

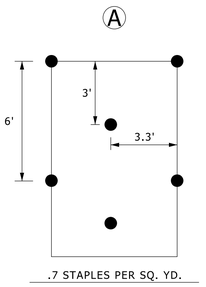

.7 STAPLES PER SQ. YD.

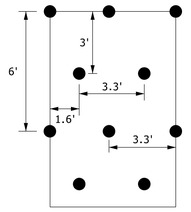

1.15 STAPLES PER SQ. YD.

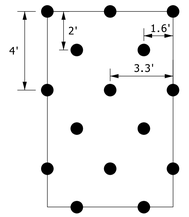

1.7 STAPLES PER SQ. YD.

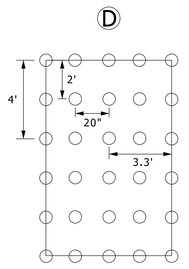

3.4 STAPLES PER SQ. YD.

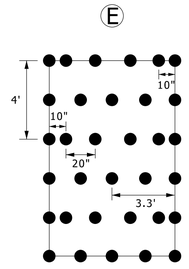

3.75 STAPLES PER SQ. YD.

STAPLE PATTERN GUIDE 6.67' WIDE ROLLS

4/1

NO SCALE

MULCH BLANKET INSTALLATION

NO SCALE

SD-SESC-BLANKET

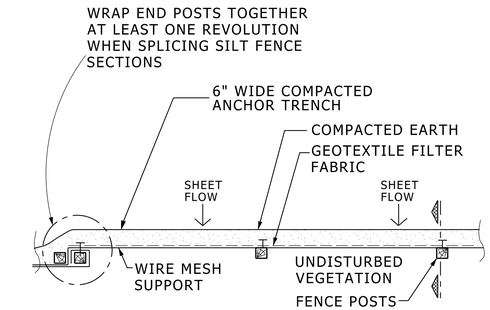

PLAIN VIEW

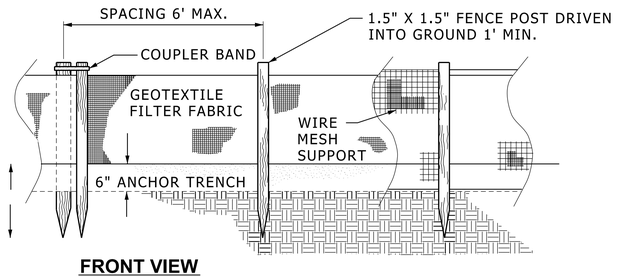

FRONT VIEW

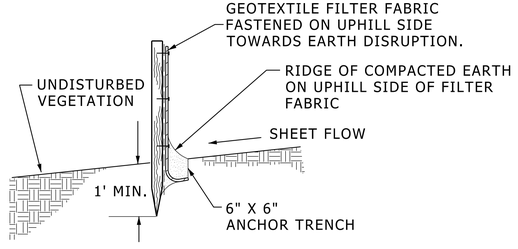

SECTION A-A

MATERIAL REQUIREMENTS

WOVEN GEOTEXTILE FABRIC WIDTH (IN)	MIN. HARDWOOD POST LENGTH (IN)	MIN. GRAB TENSILE (LBS) (ASTM D 4632)	MIN. TRAPEZOIDAL TEAR STRENGTH (LBS) (ASTM D 4533)	MIN. PERMITTIVITY (SEC^{-1}) (ASTM D 4491)	MAX. APPARENT OPENING SIZE (MM) (ASTM D 4751)
24	36	100	45	0.1	0.6

SILT FENCE

NO SCALE

NOTE: EROSION EELS ARE AN ACCEPTABLE ALTERNATIVE.

SD-SESC-FENCE

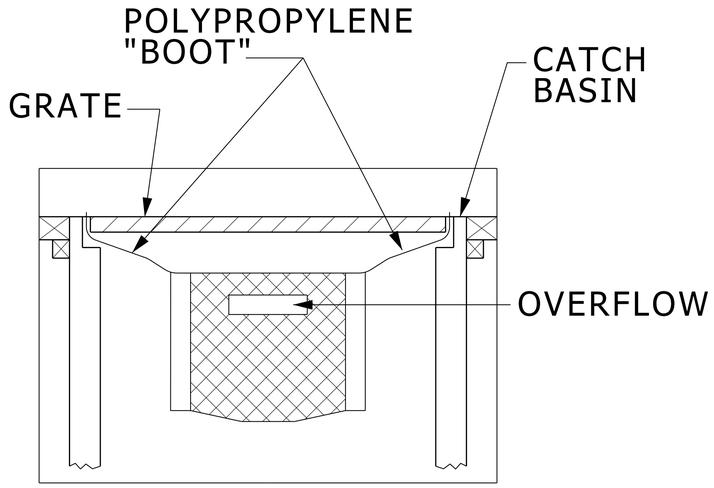

TEMPORARY INLET
SEDIMENT FILTER

NOTE:
TEMPORARY INLET SEDIMENT FILTER TO BE INSTALLED ON ALL PAVED CATCH BASINS OR STORM INLETS. INLET FILTER TO BE SIMILAR TO "STREAMGUARD" AS MANUFACTURED BY STORMWATER SERVICES CORPORATION (206-767-0441) OR "SILTSACK" AS MANUFACTURED BY ATLANTIC CONSTRUCTION FABRICS, INC. (800-448-3636).
CLEAN FILTER AS NEEDED.

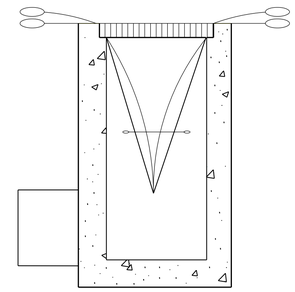

INSTALLATION
DETAIL

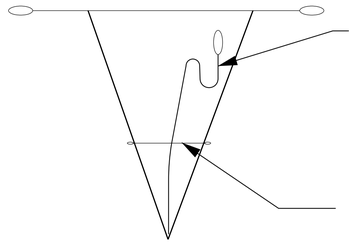

BAG DETAIL

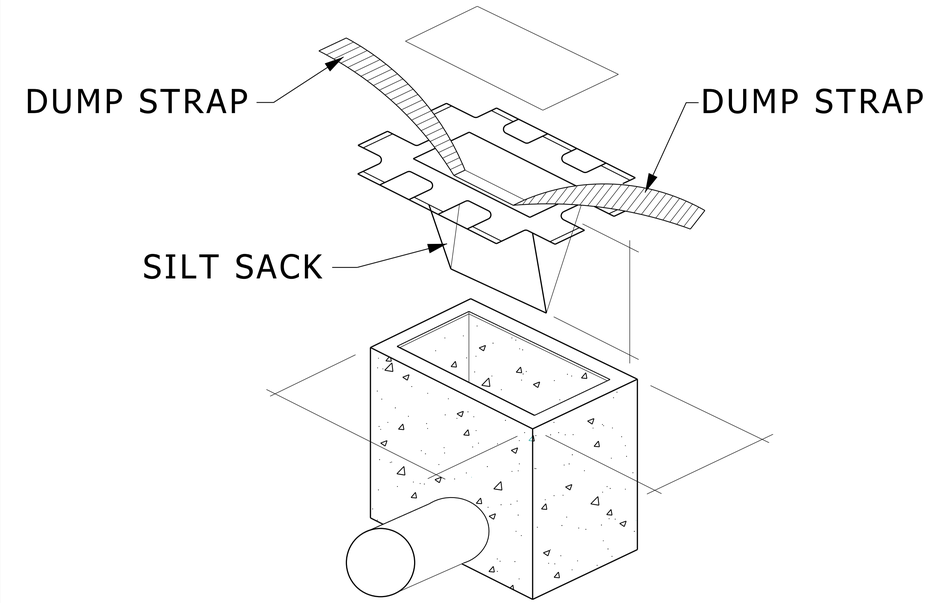

INLET FILTER SACK

NO SCALE

SD-SESC-INLET_FIL

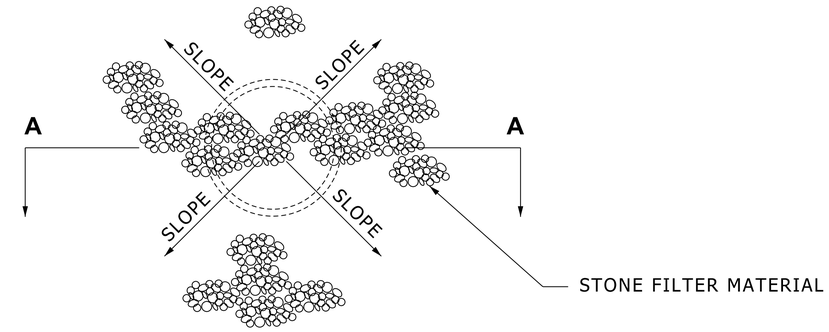

PLAN

ALL STORM STRUCTURES SUBJECT TO SEDIMENTATION TO RECEIVED PROTECTION AS SHOWN

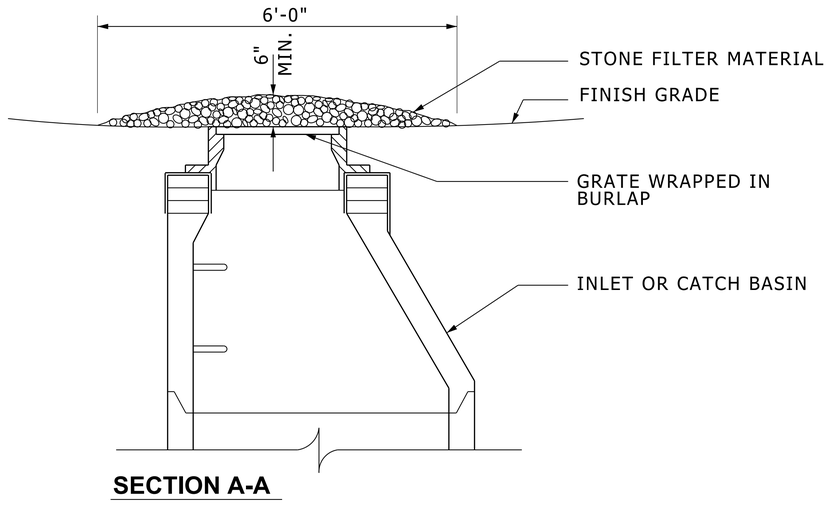

SECTION A-A

STONE INLET FILTER

NO SCALE SECTION AND PLAN

NOTE TO DESIGNER:
ONLY USE WHEN INLET FILTER SACK IS NOT VIABLE

SD-SESC-INLET_FIL_STONE

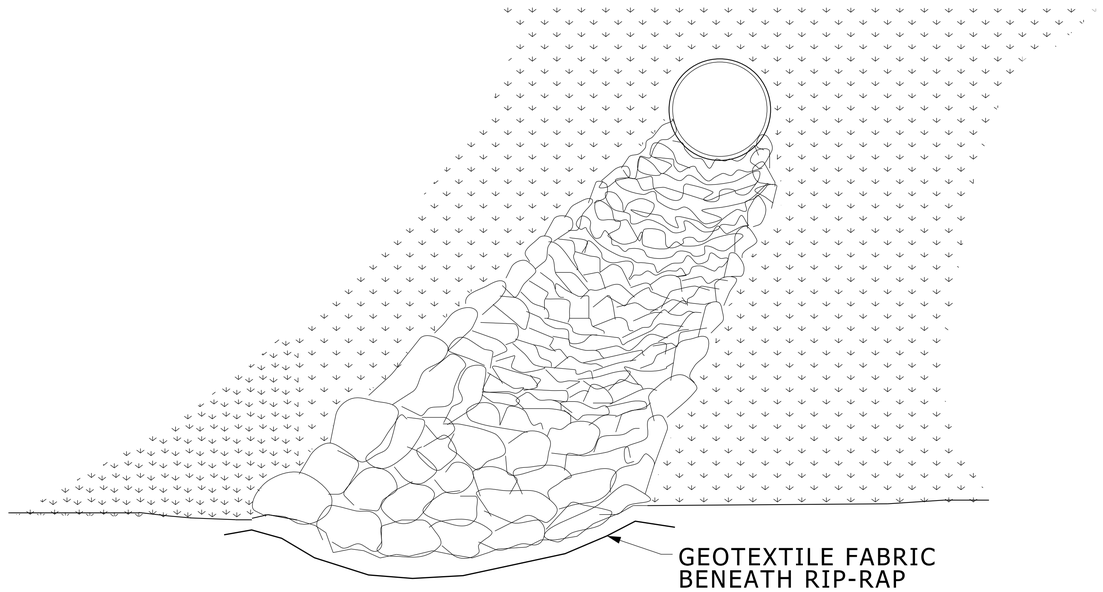

1. MATERIAL USED FOR RIP- RAP SHALL BE SOUND, TOUGH, DURABLE AND FREE FROM STRUCTURAL DEFECTS, AND MAY CONSIST OF STONE, ROCK, OR COBBLESTONE WITH AT LEAST ONE DIMENSION OF 8 INCHES AND A VOLUME OF NOT LESS THAN ⅓ OF A CUBIC FOOT. SMALLER PIECES MAY BE USED FOR FILLING VOIDS AFTER LARGER PIECES HAVE BEEN SET.
2. EACH PIECE OF RIP-RAP SHALL BE LAID INDIVIDUALLY BY HAND, AND SHALL BE BEDDED INTO THE SUB-BASE AND AGAINST ADJOINING STONE.
3. RIP-RAP THICKNESS SHALL BE 8 INCH MINIMUM.
4. RIP-RAP SHALL BE LAID ON GRANULAR SUB-BASE WITH A GEOTEXTILE FABRIC BETWEEN THE RIP-RAP AND THE SUB-BASE.
5. RIP-RAP SHALL BE COMPACTED AS IT IS INSTALLED, AND THE FINISHED SURFACE SHOULD BE EVEN AND TIGHT.

RIP-RAP

NO SCALE

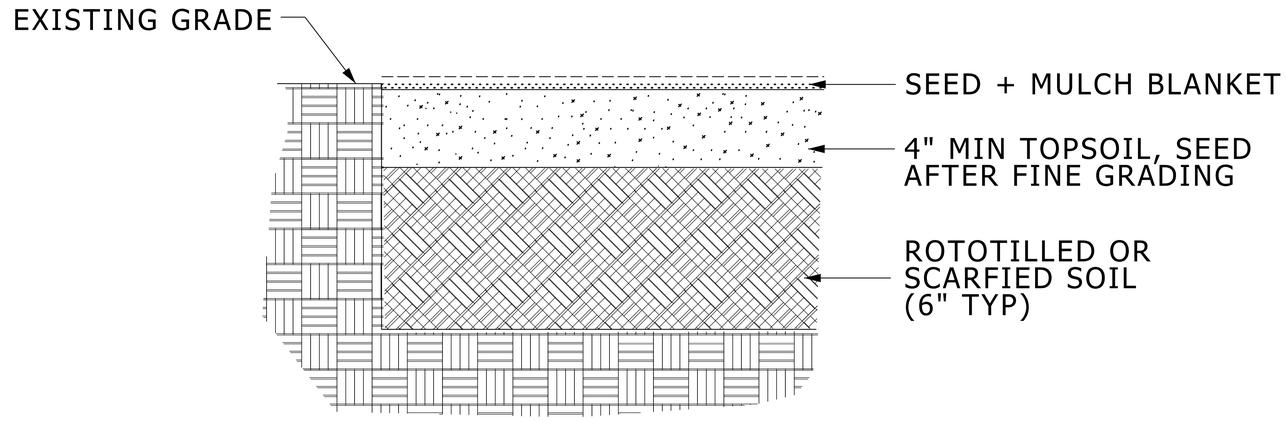

SHADY MIX
30% PETITE TALL FESCUE
30% TAOS TALL FESCUE
30% LEXINGTON TALL FESCUE
10% BLUE SAPPHIRE KENTUCKY BLUEGRASS

SUNNY MIX PREMIUM
25% BORDEAUX KENTUCKY BLUEGRASS
20% BLUE SAPPHIRE KENTUCKY BLUEGRASS
20% CRUISER PERENNIAL RYEGRASS
20% YANKEE KENTUCKY BLUEGRASS
15% STALLION SUPREME PERENNIAL RYEGRASS

SEEDED AREA

NO SCALE

NOTE TO DESIGNER:
1. SPECIFY TYPE OF MULCH BLANKET SOIL STABILIZATION, TO BE INSTALLED AFTER SEEDING
2. INCLUDE AEC TOPSOIL SPECIFICATIONS
3. INCLUDE SEED MINIMUM REQUIREMENTS

SD-SESC-SEED_AREA

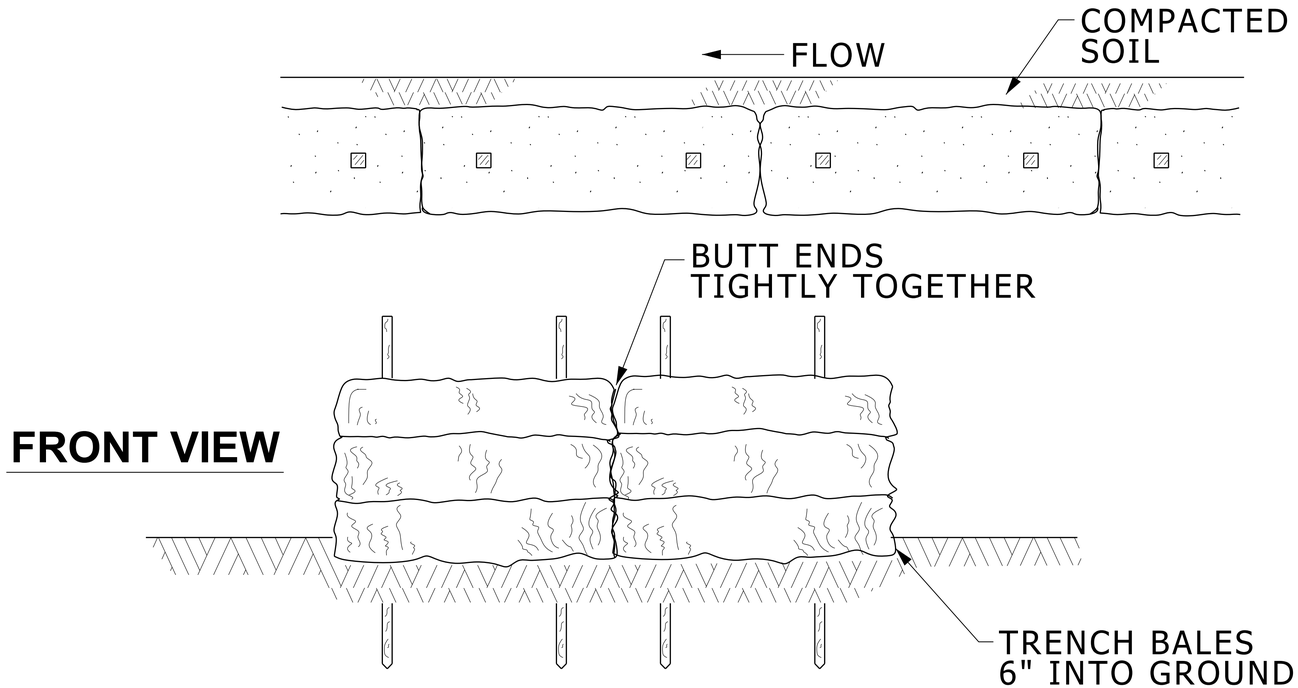

FRONT VIEW

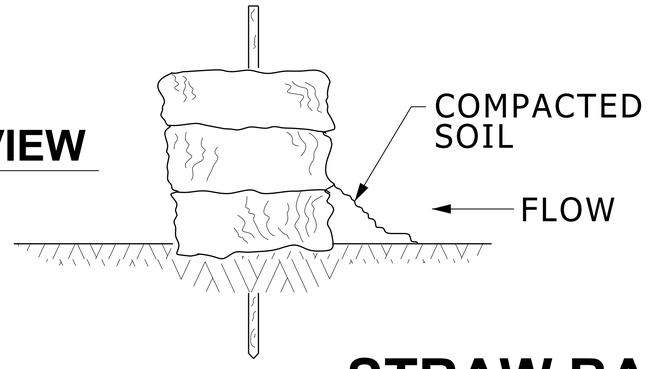

END VIEW

NOTE:
STRAW BALE DIVERSION IS NOT PERMEABLE AND THEREFORE CANNOT BE USED AS A FILTER UNLESS IT IS INSTALLED WITH A STONE OUTLET FILTER.

STRAW BALE DETAIL

NO SCALE

SD-SESC-STRAW_BALE

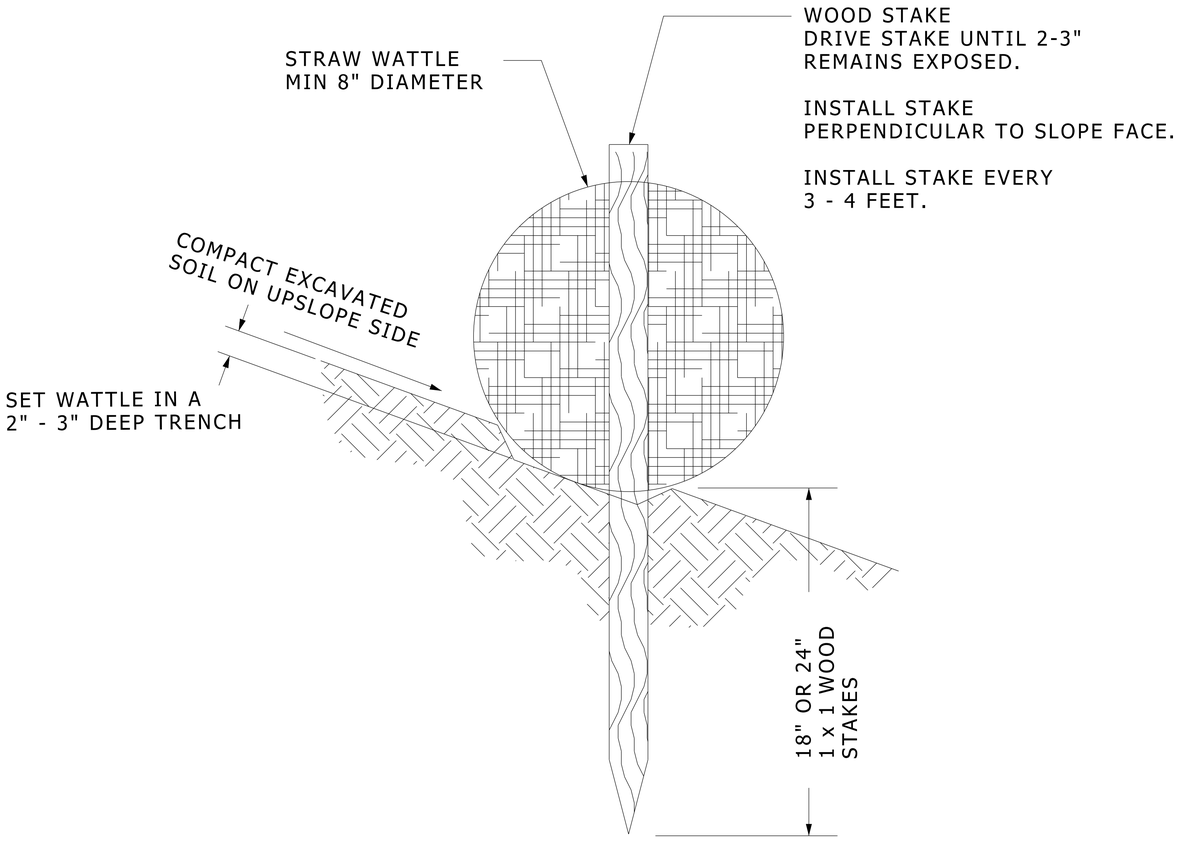

1. BEGIN AT THE LOCATION WHERE THE WATTLE IS TO BE INSTALLED BY EXCAVATING A 2-3" DEEP X 9" WIDE TRENCH ALONG THE CONTOUR OF THE SLOPE. EXCAVATED SOIL SHOULD BE PLACED UP-SLOPE FROM THE ANCHOR TRENCH AND COMPACTED.

2. PLACE THE WATTLE IN THE TRENCH SO THAT IT CONTOURS TO THE SOIL SURFACE. COMPACT SOIL FROM THE EXCAVATED TRENCH AGAINST THE WATTLE ON THE UPHILL SIDE. ADJACENT WATTLES SHOULD TIGHTLY ABUT.

3. SECURE THE WATTLE WITH 18-24" STAKES EVERY 3-4' AND WITH A STAKE ON EACH END. STAKES SHOULD BE DRIVEN THROUGH THE MIDDLE OF THE WATTLE LEAVING AT LEAST 2-3" OF STAKE EXTENDING ABOVE THE WATTLE. STAKES SHOULD BE DRIVEN PERPENDICULAR TO SLOPE FACE.

4. UNLESS SPECIFIED, CONTRACTOR CAN ELECT TO USE ANY STANDARD STRAW WATTLE SIZING 8" IN DIAMETER OR LARGER.

5. GUIDELINES FOR WATTLE SPACING BASED ON SLOPE GRADIENT:

SLOPE	SPACING
<6:1	50 FEET
5:1 - 4:1	25 FEET
4:1 - 2:1	20 FEET
2:1 - 1:1	10 FEET
> 1:1	5 FEET

NOTE: REFER TO PROJECT DRAWINGS FOR ACTUAL WATTLE LOCATION AND SPACING, WHICH IS SPECIFIC TO EACH PROJECT.

STRAW WATTLE

NO SCALE

NOTE FOR DESIGNER ONLY AND NOT TO BE PRINTED WITH DETAIL:
DELETE DETAIL NOTE 1 AND 2 IF EXCAVATION PRIOR TO STRAW WATTLE INSTALLATION IS NOT DESIRED/NECESSARY BASED ON SITE CONDITIONS.

SD-SESC-STRAW_WATTLE

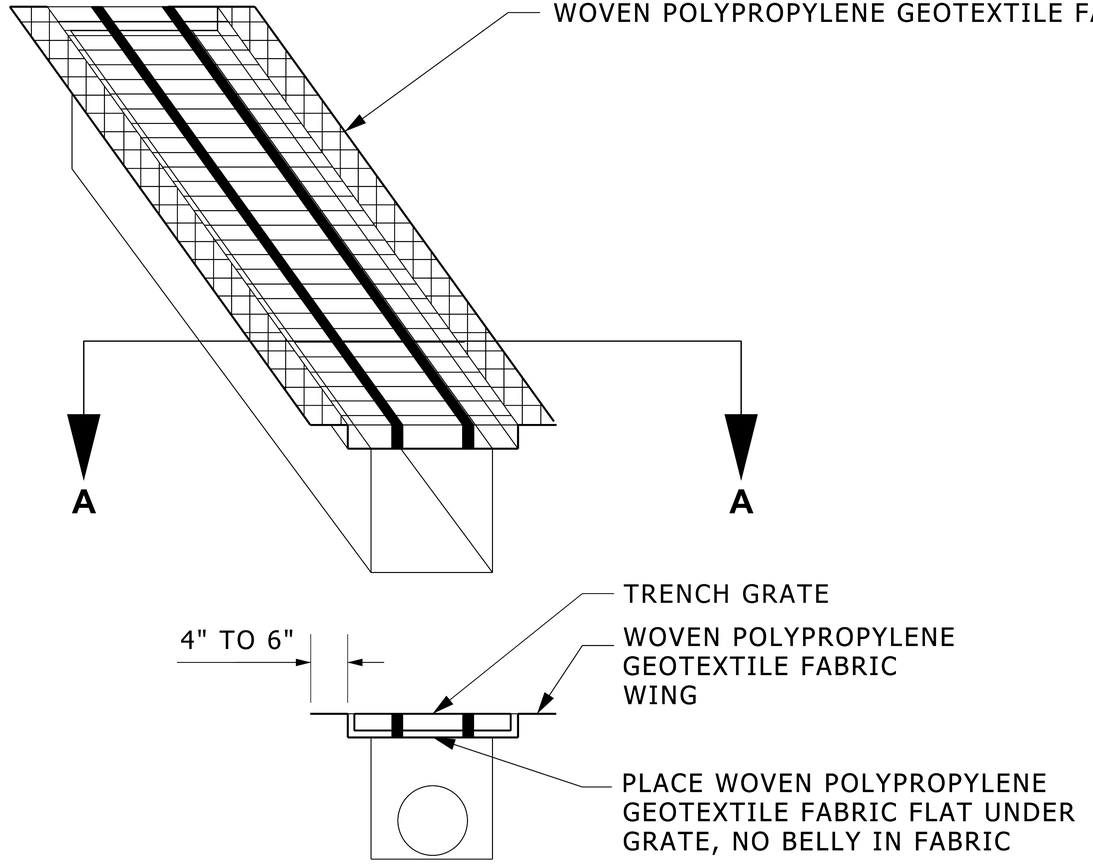

SECTION A-A TRENCH DRAIN CROSS-SECTION

NOTES:

1. CONTRACTOR TO INSTALL FILTER FABRIC UNDER TRENCH DRAIN GRATE AS SHOWN.

2. PROVIDE 4" TO 6" OVERHANG OF FILTER FABRIC

TRENCH DRAIN FILTER FABRIC

NO SCALE

SD-SESC-TRENCH_FABRIC

Note to designer: Edit for project specific applicable notes.
Notes – Civil Standard Updated 4/2016

GENERAL NOTES

1.THE CONTRACTORS SHALL VERIFY LOCATIONS OF ALL U/G UTILITY LINES AND NOTIFY "MISS DIG" 811 PRIOR TO EXCAVATING. THE CONTRACTOR WILL BE RESPONSIBLE TO REPAIR ANY UTILITY LINE DAMAGED BY CONSTRUCTION ACTIVITIES.

2.IF PLAN INFORMATION INDICATES AN EXISTING UNDERGROUND UTILITY IS OR WILL BE OUT OF SERVICE WITHIN THE LIMITS OF THIS CONTRACT, THE CONTRACTOR IS CAUTIONED TO TREAT SUCH A LINE AS IF IT WERE STILL IN SERVICE AND NOTIFY “MISS DIG” WHEN WORKING IN THE AREA OF THE OUT OF SERVICE FACILITY.

3. ALL WORK SHALL BE COMPLETED IN CONFORMANCE WITH CURRENT ADA STANDARDS.

4. ALL MATERIALS, EQUIPMENT AND CONSTRUCTION SHALL BE IN ACCORDANCE WITH THE CURRENT UNIVERSITY OF MICHIGAN STANDARD SPECIFICATIONS FOR CONSTRUCTION AND THE MICHIGAN DEPARTMENT OF TRANSPORTATION STANDARD SPECIFICATIONS FOR CONSTRUCTION.

5. THE OMISSION OF ANY CURRENT STANDARD DETAIL DOES NOT RELIEVE THE CONTRACTORS OF THEIR OBLIGATION TO CONSTRUCT ITEMS IN COMPLETE ACCORDANCE WITH U-M AND/OR MDOT AND/OR CITY OF ANN ARBOR STANDARD SPECIFICATIONS.

6. ALL WORK WITHIN CITY OF ANN ARBOR R.O.W. SHALL BE IN ACCORDANCE WITH THE CURRENT CITY OF ANN ARBOR STANDARD SPECIFICATIONS FOR CONSTRUCTION.

7. CONTRACTOR IS RESPONSIBLE FOR ALL PERMITS & FEES. ANTICIPATED PERMITS REQUIRED INCLUDE CITY OF ANN ARBOR RIGHT OF WAY, SIDEWALK CLOSURE, AND POTENTIALLY LANE CLOSURE PERMITS.

8. WALKS WITHIN THE CITY ROW SHALL BE INSPECTED BY THE CITY OF ANN ARBOR ACCORDING TO THE CITY STANDARDS.

9. IT IS THE CONTRACTOR'S RESPONSIBILITY FOR INSTALLATION OF SESC CONTROL MATERIALS. THE CONTRACTOR SHALL PROVIDE, INSTALL AND MAINTAIN INLET FILTER BAGS ON ALL STORM WATER INLETS IN THE VICINITY OF THE PROJECT SITE WHICH MAY RECEIVE STORM WATER RUNOFF FROM THE SITE. THE CONTRACTOR SHALL REMOVE THE INLET FILTER BAGS AT THE CONCLUSION OF THE PROJECT WORK.

10. CONTRACTORS SHALL AVOID NOISE GENERATING WORK AROUND CAMPUS BUILDINGS DURING UNIVERSITY SEMESTER EXAM PERIODS. *(ONLY INCLUDE IF APPLICABLE)*

11. ALL BARRICADES AND TRAFFIC CONTROL REQUIRED SHALL BE PROVIDED BY THE CONTRACTOR. ALL BARRICADES SHALL HAVE A BOTTOM RAIL WITHIN 3 TO 6 INCHES ABOVE GRADE WITHIN PEDESTRIAN PATHS OF TRAVEL TO NOTIFY PEDESTRIANS WITH CANES OF THE OBSTRUCTION.

12. CONTRACTOR SHALL PROVIDE A PEDESTRIAN DETOUR IN ALL INSTANCES WHERE A SIDEWALK WIDTH IS CLOSED OR REDUCED TO LESS THAN 5 FEET IN WIDTH. THIS INCLUDES BUT NOT LIMITED TO BARRICADES, SIDEWALK CLOSED, DETOUR ARROWS AS OUTLINED IN THE MMUTCD.

13. MATERIAL TESTING WILL BE PROVIDED BY A 3RD PARTY HIRED BY OWNER. CONTRACTOR IS RESPONSIBLE FOR COORDINATION OF ALL MATERIAL TESTING.

14. NO EQUIPMENT OR VEHICLES MAY BE PARKED IN LAWN OR LANDSCAPED AREAS WITHOUT PRIOR APPROVAL BY UM PROJECT MANAGER.

15. NO STORAGE OF MATERIALS, PARKING, OR DRIVING IS ALLOWED WITHIN THE LIMITS OF TREE CANOPIES.

16. CONTRACTOR SHALL CONTACT REPUBLIC PARKING (734-761-7235) TO COORDINATE ANY NECESSARY CLOSURE OF CITY OF ANN ARBOR ON-STREET PARKING AND SHALL PAY ANY ASSOCIATED FEES.

17. EGRESS TO BUILDINGS SHALL BE MAINTAINED AT ALL TIMES - WORK WITH U-M PROJECT MANAGER TO COORDINATE ANY LOCATIONS WHERE WORK WILL CUT OFF BUILDING ACCESS.

18. MAINTAIN VISIBILITY AND ACCESSIBILITY TO FIRE HYDRANTS AND BUILDING FIRE DEPARTMENT CONNECTION LOCATIONS.

19. GOOD HOUSEKEEPING PRACTICES MUST BE EMPLOYED AT THE JOB SITE. MINIMIZE DUST.

20. ALL DISTURBED LANDSCAPE/GRASS AREAS SHALL BE RESTORED BY THE CONTRACTOR BY INSTALLING A MINIMUM OF 4" OF TOP SOIL, SEED AND MULCH OR HYDROSEED.

21. ALL BROKEN ASPHALT, CONCRETE, & DEBRIS SHALL BECOME THE PROPERTY OF THE CONTRACTOR AND SHALL BE PROPERLY REMOVED FROM THE SITE PRIOR TO THE COMPLETION OF THE CONTRACT. NO STOCK PILING WILL BE ALLOWED ON SITE.

22. SEQUENCING OF WORK IS TO BE APPROVED BY PROJECT MANAGER PRIOR TO STARTING CONSTRUCTION.

23. PARKING LOT LIGHTING WORK WILL BE CARRIED OUT BY U-M PLANT POWER AND LIGHTING SHOP. CONTRACTOR SHALL COORDINATE GRADING & U/G WORK WITH DAVE LAMMERS AT 734-647-2049. *(Select one option as applicable – either prior or following note.)* COORDINATE SITE LIGHTING WORK AND PANEL ACCESS FOR SHUTDOWNS WITH U-M POWER AND LIGHTING, DAVE LAMMERS AT 734-647-2049.

CONCRETE NOTES

1. ALL CONCRETE SHALL BE 4000 PSI MINIMUM COMPRESSIVE STRENGTH AT 28 DAYS AND CONSIST OF AIR ENTRAINED PORTLAND CEMENT WITH A TOTAL AIR CONTENT OF NOT LESS THAN 5% AND NOT MORE THAN 8%. CEMENT CONTENT SHALL BE MINIMUM OF SIX BAGS PER CUBIC YARD. THE SLUMP SHALL NOT BE MORE THAN 4 INCHES NOR LESS THAN 1- 1/2" AS DETERMINED BY THE SLUMP CONE TEST ASTM-143. SLUMP GREATER THAN 5” WITH USE OF AN ADMIXTURE REQUIRES ENGINEER AND U-M PROJECT MANAGER APPROVAL. CONC. WALKS AND PAVEMENT SHALL INCLUDE POLYPROPYLENE FIBRILLATED FIBERS WITH A VOLUME OF 1.5 LBS/CY.

2. CONCRETE CURING COMPOUND SHALL BE CLEAR MEMBRANE CONFORMING TO ASTM C-309, TYPE I OR ID, CLASS A AND B AND APPLIED AT A RATE OF NOT LESS THAN ONE GALLON PER 200 SQ. FT. OF CONCRETE SURFACE IMMEDIATELY AFTER FINISHING OPERATIONS ARE COMPLETE. CURING COMPOUND USED WITHIN CLOSE PROXIMITY OF BUILDING DOORS, WINDOWS OR AIR INTAKES SHALL BE WATER BASED.

3. GRANULAR MATERIAL SHALL BE A MINIMUM OF MDOT CLASS II COMPACTED TO 98% ASTM 1557 VALUE. GRANULAR MATERIAL WITHIN THE ROW SHALL MEET CITY OF ANN ARBOR CLASS II REQUIREMENTS.

4. ALL PREPARED GRANULAR FILL BASE SHALL MEET COMPACTION REQUIREMENTS PRIOR TO THE SCHEDULING OF CONCRETE/PAVING MATERIAL DELIVERY. CONTRACTOR IS RESPONSIBLE FOR ALL COORDINATION OF REQUIRED MATERIAL TESTING.

5. PROVIDE 1/2" THICK SEALED EXPANSION JOINTS AT ALL POINTS OF CONTACT WITH FIXED OBJECTS SUCH AS BUILDING, CURBS, PAVING, POLES, SIGNS AND HYDRANTS. EXPANSION JOINTS SHALL BE INCIDENTAL TO CONCRETE INSTALLATION.

6. PLACE CONCRETE ON A MOIST COMPACT BASE.

7. PROVIDE HAND TOOLED CONTROL JOINTS IN CONCRETE WALKS TO FORM PANELS OF SIZES INDICATED OR MATCH EXISTING PATTERN. HAND TOOL ½" WIDE CONTROL JOINTS TO A MINIMUM DEPTH OF ONE (1) INCH. TOTAL DEPTH OF CONTROL JOINT SHALL BE ¼ OF SLAB THICKNESS. FOR SLAB THICKNESS GREATER THAN 8", SAWCUTTING, IN ADDITION TO AND AFTER HAND TOOLING JOINTS, IS REQUIRED TO MEET A FINAL DEPTH OF ¼ THICKNESS OF THE SLAB. SAWCUTTING SHALL OCCUR AS SOON AS POSSIBLE AND WITHIN 24 HOURS OF CONCRETE INSTALLATION. INITIAL SURFACE SAWCUT CONTROL JOINTS (SAWCUT ONLY) ARE PROHIBITED UNLESS APPROVED BY OWNER.

8. SAWCUT & GRINDING TOOLS MUST BE ATTACHED TO A WATER SOURCE OR A VACUUM DEVICE TO MINIMIZE DUST EXPOSURE.

9. SAWCUTTING FOR REMOVALS SHALL BE INCIDENTAL TO REMOVAL.

UTILITY NOTES

SANITARY SEWER

1. ALL SANITARY SEWER SPECIFIED AS PVC SHALL BE SDR26 POLYVINYL CHLORIDE (PVC) CONFORMING TO CURRENT ASTM DESIGNATION D3034-94, OR CURRENT REFERENCE FOR SDR 26, "STANDARD SPECIFICATIONS FOR TYPE PSM POLYVINYL CHLORIDE (PVC) SEWER IPE AND FITTINGS. PIPE SHALL HAVE AN INTEGRAL WALL, SDR26 BELL & SPIGOT RUBBER O-RING GASKET JOINTS, UNLESS NOTED OTHERWISE.

2. CONTRACTOR TO FOLLOW MDOT REQUIREMENTS FOR VIDEO INSPECTION OF SEWER PIPE. ALL PVC SANITARY SEWER MAINS SHALL BE MANDREL TESTED FOR DEFLECTION BY THE CONTRACTOR. NO PIPE SHALL EXCEED A DEFLECTION OF 5 PERCENT. IF DEFLECTION EXCEEDS 5 PERCENT, THE PIPE SHALL BE EXCAVATED AND REPLACED IN ACCORDANCE WITH REQUIREMENTS OF APPROVED SPECIFICATIONS. THE RIGID BALL OR MANDREL USED FOR THE DEFLECTION TEST SHALL HAVE A DIAMETER NOT LESS THAN 95 PERCENT OF THE BASE INSIDE DIAMETER OR AVERAGE INSIDE DIAMETER OF THE PIPE PER ASTM SPECIFICATION. THE TEST SHALL BE PERFORMED WITHOUT MANUAL PULLING DEVICES. SANITARY SEWER AIR TESTING SHALL BE BASED ON THE AUTHORITY HAVING JURISDICTION. THE CONTRACTOR SHALL FURNISH ALL LABOR, EQUIPMENT AND MATERIALS NECESSARY FOR TESTING AS INCIDENTAL TO THE SANITARY SEWER INSTALLATION.

STORM

1. STORM SEWER SHALL MEET MDOT MATERIAL LOADING REQUIREMENTS. STORM SEWER IN THE CITY ROW SHALL MEET CITY OF ANN ARBOR REQUIREMENTS.

2. STORM SEWER SPECIFIED AS HIGH DENSITY POLYETHYLENE (HDPE) SHALL MEET THE REQUIREMENTS OF AASHTO M294. THE PIPE SHALL BE CORRUGATED WITH AN INTEGRALLY FORMED SMOOTH INTERIOR. JOINTS SHALL BE GASKETED WATER TIGHT JOINTS USING WATERTIGHT SLEEVES. SLEEVES SHALL BE FACTORY INSTALLED ON ONE END OF THE PIPE WITH A FACTORY INSTALLED GASKET ON THE OPPOSITE END OF THE PIPE.

3. AFTER TRENCH BACKFILL AND COMPACTION IS COMPLETE, ENGINEER WILL SELECT AT LEAST 50% OF THE INSTALLED LENGTH OF EACH SIZE OF STORM SEWER HDPE PIPE FOR THE CONTRACTOR TO MANDREL TEST FOR DEFORMATION. UNLESS APPROVED OTHERWISE, CONTRACTOR TO PERFORM THE MANDREL TESTING FROM 5 TO 10 DAYS BEFORE PAVEMENT SURFACING OR COMPLETION OF FINAL GRADE. ALLOW TIME FOR CORRECTIVE ACTION. FOLLOW MDOT TESTING REQUIREMENTS FOR MANDREL TESTING OF HDPE STORM SEWERS. MANDREL TESTING IS INCIDENTAL TO HDPE STORM SEWER INSTALLATION.

4. CONTRACTOR TO FOLLOW MDOT REQUIREMENTS FOR VIDEO INSPECTION OF SEWER PIPE. VIDEO INSPECTION IS NOT REQUIRED FOR EXTENSIONS OF EXISTING CATCH BASIN LEADS LESS THAN 20 FEET. ALLOW TIME FOR CORRECTIVE ACTION. OPTIONS: TEST PLASTIC PIPING ACCORDING TO ASTMF 1714 AND TEST CONCRETE PIPING ACCORDING TO ASTM C924. STORM SEWER AIR TESTING SHALL BE BASED ON THE AUTHORITY HAVING JURISDICTION. IN THE EVENT OF FAILURE TO PASS AN AIR TEST, THE SEWER LINE SHOULD BE SUBJECTED TO A WATER INFILTRATION TEST AS PRESCRIBED BY ASTM C696 BEFORE RECONSTRUCTION IS CONSIDERED. THE CONTRACTOR SHALL FURNISH ALL LABOR, EQUIPMENT AND MATERIALS NECESSARY FOR ALL TESTING AND IS INCIDENTAL TO THE STORM SEWER INSTALLATION.

WATERMAIN

1. ALL MATERIALS, EQUIPMENT AND CONSTRUCTION SHALL BE IN ACCORDANCE WITH THE CURRENT CITY OF ANN ARBOR STANDARD SPECIFICATIONS AND DETAILS. THE OMMISSION OF ANY CURRENT STANDARD DETAIL DOES NOT RELIEVE THE CONTRACTOR FROM THIS REQUIREMENT.

2. CONTRACTOR SHALL COORDINATE CITY OF ANN ARBOR INSPECTION PRIOR TO IMPACTING WATER MAINS.

3. DUCTILE IRON PIPE SHALL BE A MINIMUM THICKNESS OF CLASS 52 WITH POLYETHYLENE WRAP AND PUSH-ON JOINTS, UNLESS OTHERWISE NOTED.

4. GATE VALVES SHALL BE RESILIENT SEAT NON-RISING STEM PUSH-ON GATE VALVE WITH 2" SQUARE OPERATING NUT, OPENING RIGHT, COMPLETE WITH ACCESSORIES. GATE VALVE SHALL MEET AWWA SPECIFICATION C509 OR C515 AND CURRENT CITY OF ANN ARBOR STANDARDS. SEE CITY OF ANN ARBOR DIVISION III MATERIAL STANDARDS.

5. ALL HORIZONTAL BENDS, TEES AND FITTINGS SHALL INCLUDE THRUST BLOCKS. RESTRAINED JOINT GASKETS RATED FOR 350 PSI ARE REQUIRED FOR VERTICAL BENDS.

6. CITY CONNECTION CHARGES/METER FEES AND CITY CONSTRUCTION INSPECTION ESCROW FEE WILL BE PAID BY THE UNIVERSITY OF MICHIGAN. ANY INSPECTION FOR REWORK INCLUDING REPEAT BACTERIA TESTING WILL BE PAID BY THE UNIVERSITY AND BACK-CHARGED TO THE CONTRACTOR BY THE UNIVERSITY. TEMPORARY HYDRANT METER/WATER FEES AND/OR TESTING CORPORATIONS ARE TO BE PAID BY THE CONTRACTOR.

7. ALL WATER MAIN SHALL HAVE A TYPICAL 5.5 FT. COVER. MAINTAIN A MINIMUM OF 18 INCHES VERTICAL CLEARANCE FOR STORM AND SANITARY CROSSINGS AND A MINIMUM OF 12 INCHES VERTICAL CLEARANCE WITH ALL OTHER UTILITIES.

8. UNLESS OTHERWISE NOTED, THE CONTRACTOR SHALL UTILIZE STANDARD ALLOWABLE PIPE DEFLECTIONS FOR THE PROPOSED ALIGNMENT.

9. FIRE HYDRANT ASSEMBLIES SHALL INCLUDE ALL NECESSARY THRUST BLOCKS, BENDS, PIPE AND FITTINGS, INCLUDING ADJUSTMENT OF THE STOP BOX. FIRE HYDRANT ASSEMBLY INCLUDES 6 INCH STOP BOX LOCATED 3 FEET FROM HYDRANT.

10. LINE STOPS SHALL BE INSTALLED WHERE EXISTING WATER MAINS CANNOT BE SUFFICIENTLY ISOLATED TO COMPLETE THE WORK. THE CITY OF ANN ARBOR IS NOT RESPONSIBLE FOR THE COST OF INSTALLING LINE STOPS.

11. WATER MAIN FITTINGS SUCH AS BLOW-OFF ASSEMBLIES, CONCRETE THRUST BLOCKS, SOLID SLEEVES AND MECHANICAL PLUGS WHICH ARE REQUIRED TO COMPLETE THE WORK, OTHER THAN THOSE SPECIFICALLY LISTED AS SEPARATE PAY ITEMS, SHALL NOT BE PAID FOR SEPARATELY BUT SHALL BE INCLUDED IN THE PIPE PAY ITEMS. *(NOTE to designer: Include this for unit price water main work.)*

12. THE CONTRACTOR SHALL CONSTRUCT, FLUSH, AND BACTERIOLOGICALLY TEST THE WATERMAIN PER CITY OF ANN ARBOR SPECIFICATIONS. ALL CHLORINATED WATER SHALL BE DISCHARGED DIRECTLY INTO AN APPROVED SANITARY SEWER. THE CONTRACTOR SHALL SUPPLY ALL NECESSARY PERSONNEL, HOSES, FITTINGS, AND THE LIKE TO ACCOMPLISH THIS WORK AND IS INCIDENTAL TO THE INSTALLATION OF WATER MAIN.

13. HYDROSTATIC TESTING MUST BE PERFORMED IN ACCORDANCE WITH ANSI/AWWA C600. DISINFECTION AND BACTERIOLOGICAL TESTING MUST BE PERFORMED IN ACCORDANCE WITH ANSI/AWWA C651. ALL TESTING MUST BE COORDINATED WITH THE CITY OF ANN ARBOR AND BE PER CITY OF ANN ARBOR SPECIFICATIONS.

14.CONNECTIONS TO EXISTING WATER MAIN SHALL NOT BE MADE UNTIL THE NEW WATER MAIN HAS BEEN SUCCESSFULLY PRESSURE TESTED AND HAS PASSED BACTERIOLOGICAL TESTING. FINAL CONNECTIONS SHALL BE COORDINATED WITH THE ENGINEER. THE CONTRACTOR SHALL COORDINATE ALL WATER SYSTEM SHUT DOWNS WITH THE UNIVERSITY OF MICHIGAN AND THE CITY OF ANN ARBOR AFTER APPROPRIATE NOTIFICATIONS HAVE BEEN PROVIDED TO THOSE AFFECTED. CONTRACTORS SHALL NOT OPERATE VALVES OWNED BY THE CITY OF ANN ARBOR.

15. GATE WELL STRUCTURES FRAME AND COVERS SHALL BE EJIW 1040 WITH TYPE “C” LIDS LETTERED “WATER.”

Notes – SESC and EHS General
Updated 9/11/15 by A&E Civil

SOIL EROSION AND SEDIMENTATION CONTROL SEQUENCE

IN ACCORDANCE WITH RULE 1709 PROMULGATED UNDER THE AUTHORITY OF PART 91, SOIL EROSION AND SEDIMENTATION CONTROL, OF THE NATURAL RESOURCES AND ENVIRONMENTAL PROTECTION ACT, 1994PA 451, AS AMENDED, AND IN ADDITION TO THE INFORMATION IN THE PROJECT PLANS AND SPECIFICATIONS,THE FOLLOWING GENERAL CONDITIONS APPLY TO THE EARTH CHANGE AUTHORIZED BY THIS DOCUMENT:

1. DESIGN, CONSTRUCT, AND COMPLETE THE EARTH CHANGE IN A MANNER THAT LIMITS THE EXPOSED AREA OF DISTURBED LAND FOR THE SHORTEST PERIOD OF TIME.

2. REMOVE SEDIMENT CAUSED BY ACCELERATED SOIL EROSION FROM RUNOFF WATER BEFORE IT LEAVES THE SITE OF THE EARTH CHANGE.

3. TEMPORARY OR PERMANENT CONTROL MEASURES SHALL BE DESIGNED AND INSTALLED TO CONVEY WATER AROUND, THROUGH OR FROM THE EARTH CHANGE AT A NON-EROSIVE VELOCITY.

4. INSTALL TEMPORARY SOIL AND SEDIMENTATION CONTROL MEASURES BEFORE OR UPON COMMENCEMENT OF THE EARTH CHANGE ACTIVITY AND MAINTAIN THE MEASURES ON A DAILY BASIS. REMOVE TEMPORARY SOIL EROSION AND SEDIMENTATION CONTROL MEASURES AFTER PERMANENT SOIL EROSION MEASURES ARE IN PLACE AND THE AREA IS STABILIZED. (STABILIZED MEANS THE ESTABLISHMENT OF VEGETATION OR THE PROPER PLACEMENT, GRADING OR COVERING OF SOIL TO ENSURE RESISTANCE TO SOIL EROSION, SLIDING OR OTHER EARTH MOVEMENT.)

5. COMPLETE PERMANENT SOIL EROSION CONTROL MEASURES FOR THE EARTH CHANGE WITHIN FIVE (5) CALENDAR DAYS AFTER FINAL GRADING OR UPON COMPLETION OF FINAL EARTH CHANGE. IF IT IS NOT POSSIBLE TO PERMANENTLY STABILIZE THE EARTH CHANGE, THEN MAINTAIN TEMPORARY SOIL EROSION AND SEDIMENTATION CONTROL MEASURES UNTIL PERMANENT SOIL EROSION CONTROL MEASURES ARE IN PLACE AND STABILIZED.

6. THE CONTRACTOR IS RESPONSIBLE FOR MAINTAINING LANDSCAPING DURING THE WARRANTY PERIOD. AFTER THE WARRANTY HAS EXPIRED, THE PERMANENT SESC MEASURES WILL BE MAINTAINED BY UNIVERSITY OF MICHIGAN PLANT OPERATIONS GROUNDS AND WASTE DEPARTMENT AND THE PLUMBING SHOP AS APPROPRIATE. THE GROUNDS MANAGER WILL BE RESPONSIBLE FOR MAINTENANCE OF ANY PERMANENT LANDSCAPING SESC MEASURES. THE PLUMBING SHOP FOREMAN WILL BE RESPONIBLE FOR THE MAINTENANCE OF ANY SESC MEASURES THAT ARE PART OF THE WATER DRAINAGE SYSTEM.

SOIL EROSION AND SEDIMENTATION CONTROL MAINTENANCE NOTES

1. INSTALL TEMPORARY INLET FILTERS AT ALL ADJACENT AND DOWN-GRADIENT STORM WATER INLETS, CATCH BASINS AND MANHOLES THAT MAY BE IMPACTED. CATCH BASIN INLET FILTERS SHALL BE MAINTAINED CLEAN AT ALL TIMES THROUGHOUT THE CONSTRUCTION PERIOD. IF A FILTER HAS HOLES OR IS INUNDATED WITH SEDIMENT, THE FILTER WILL REQUIRE REPLACEMENT.

2. INSTALL AN ANTI-TRACKING PAD AT THE SITE ENTRY AND EXIT(S), THE ANTI-TRACKING PAD SHOULD BE CONSTRUCTED OF GEOTEXTILE FABRIC WITH LIMESTONE OVER IT.

3. SILT FENCE SHALL BE MAINTAINED AT ALL TIMES THROUGHOUT THE CONSTRUCTION PERIOD. IF REPAIR OR REPLACEMENT IS NECESSARY, IT SHALL BE PERFORMED ACCORDING TO THE MANUFACTURER'S SPECIFICATIONS. MAINTENANCE INCLUDES THE REMOVING OF BUILT-UP SEDIMENT ACCUMULATES TO ½ THE HEIGHT OF THE FENCE. CONTRACTOR SHALL REMOVE, REPLACE, RETRENCH, OR RE-BACKFILL THE FENCE IF IT FAILS. ADDITIONALLY, THE CONTRACTOR SHALL REINSTALL ANY PORTION OF THE FENCING DAMAGED BY CONSTRUCTION MACHINERY.

4. PLACE STOCKPILES AND OTHER SPOIL PILES AWAY FROM THE DRAINAGE SYSTEM TO MINIMIZE SEDIMENT TRANSPORT. IF THE STOCKPILE AND/OR SPOIL PILE MUST REMAIN ON-SITE OVERNIGHT, OR IF THE WEATHER CONDITIONS INDICATE THE CHANCE FOR PRECIPITATION, A) COVER THE PILE WITH WATER REPELLENT MATERIAL TO PREVENT EROSION AND/OR B) INSTALL SILT FENCING AROUND THE BASE OF THE PILE TO PREVENT TRANSPORT OF SEDIMENT TO THE STORM WATER SYSTEM, OR APPLY OTHER CONTROL METHODS APPROPRIATE TO THE SIDE. CONTROL MEASURES TO GUARD AGAINST WIND EROSION MUST ALSO BE EMPLOYED, SUCH AS WETTING OR COVERING THE STOCKPILES. KEEP AS FEW STOCKPILES AS POSSIBLE DURING THE COURSE OF THE PROJECT.

5. THROUGHOUT THE CONSTRUCTION PERIOD, ALL MUD/SILT TRACKED ONTO EXISTING ROADS FROM THE SITE DUE TO CONSTRUCTION SHALL BE IMMEDIATELY REMOVED BY THE CONTRACTOR.

6. SEEDING OR OTHER STABILIZATION SHALL BE REQUIRED IMMEDIATELY TO AREAS WHICH HAVE BEEN DAMAGED BY RUNOFF.

7. THE CONTRACTOR SHALL MAINTAIN DUST CONTROL ON THE SITE THROUGHOUT THE DURATION OF THE CONSTRUCTION PROCESS.

8. WEEKLY INSPECTIONS BY A UNIVERSITY SESC TRAINED CERTIFIED STORM WATER MANAGEMENT OPERATOR AS WELL AS PERIODIC INSPECTIONS WITHIN 24 HOURS OF ANY RAINFALL WILL BE REQUIRED. THESE INSPECTIONS MAY RESULT IN RECOMMENDATIONS FOR ROUTINE MAINTENANCE OF THE SOIL EROSION CONTROL DEVICES, AS WELL AS ADDITIONAL CONTROLS.

GENERAL NOTES

1. DURING WORK ACTIVITIES IF SUSPECT CONTAMINATED SOIL, GROUNDWATER, OR OTHER UNKOWN MATERIAL IS ENCOUNTERED CONTACT YOUR UNIVERSITY OF MICHIGAN CONSTRUCTION MANAGEMENT REPRESENTATIVE AND THE U-M OCCUPATIONAL SAFETY & ENVIRONMENTAL HEALTH DEPARTMENT (763-6973) IMMEDIATELY. SUSPECT CONTAMINATED SOIL MAY EXHIBIT CHEMICAL OR UNUSUAL ODORS, STAINING, UNUSUAL COLORING, AND/OR CONTAIN MAN-MADE DEBRIS. SUSPECT CONTAMINATED GROUNDWATER MAY EXHIBIT CHEMICAL OR UNUSUAL ODORS, UNUSUAL COLORING, AND/OR SHEEN. IMMEDIATELY CEASE ALL EXCAVATION, DEWATERING, TRANSPORT, OR DISTURBANCE OF THE SUSPECT MATERIAL UNTIL GIVEN DIRECTION BY THE U-M CONSTRUCTION MANAGEMENT REPRESENTATIVE.

2. MANAGEMENT AND DISPOSAL OF REGULATED WASTE MATERIALS. CONTRACTOR SHALL COORDINATE WITH EHS-HAZARDOUS MATERIALS MANAGEMENT (HMM) PROGRAM AT (753-4568) FOR THE REMOVAL OF ALL REGULATED WASTE MATERIALS. REGULATED WASTE MATERIALS INCLUDE, BUT ARE NOT LIMITED TO: USED CHEMICAL PRODUCTS, PAINTS, SOLVENTS, ADHESIVES, OILS, GREASES, CLEANERS, DEGREASERS, CONTAMINATED OR OILY RAGS, GLYCOLS, HEAT TRANSFER FLUIDS, AND BOILER CHEMICALS. A REPRESENTATIVE FROM THE EHS-HMM PROGRAM SHALL SIGN ALL WASTE DISPOSAL MANIFESTS FOR REGULATED WASTES. WASTE MATERIALS SHALL BE STAGED FOR PICK UP IN AREAS THAT ARE EASILY ACCESSIBLE TO EHS-HMM STAFF. WASTE CONTAINERS SHALL BE STORED ON A HARD SURFACE SUCH AS ASPHALT, CONCRETE, OR TILED FLOORING. ALL WASTE

CONTAINERS SHALL BE LABELED WITH EITHER A HAZARDOUS WASTE LABEL, OR A NON RCRA REGULATED WASTE LABEL AS APPROPRIATE. LABELS SHALL REMAIN VISIBLE, AND SHALL BE COMPLETED LEGIBLY. LABELS MAY BE OBTAINED BY CALLING EHS-HMM PROGRAM OFFICE. ALL CONTAINERS SHALL BE TIGHTLY CLOSED WHEN NOT ACTIVELY BEING FILLED. CONTAINERS SHALL BE INSPECTED DAILY FOR LEAKS, CLOSURE, LABELING AND CONTAINER INTEGRITY. CONTRACTOR SHALL PROVIDE U OF M EHS WITH MATERIALS SAFETY DATA SHEETS FOR ALL CHEMICALS USED IN THE PROJECT. CONTRACTOR SHALL CLEAN UP ALL SPILLS IMMEDIATELY. FOR SPILLS

3. CONCRETE, ASPHALT & SAWCUTTING WORK

UM PROJECTS SHALL NOT DISCHARGE TO THE SURFACE WATERS OF THE STATE ANY WASTEWATER GENERATED FROM CUTTING, GRINDING, DRILLING, OR HYDRODEMOLITION OF CONCRETE, INCLUDING ASPHALT WITHOUT AUTHORIZATION UNDER AN NPDES WASTEWATER DISCHARGE PERMIT.

THE FOLLOWING REQUIREMENTS APPLY:

- ***DISCHARGE*** OF WATER, DUST, OR DEBRIS FROM CONCRETE AND ASPHALT WORK TO STORM OR SANITARY SYSTEMS ***IS PROHIBITED***.
- STORM DRAINS MUST BE PROTECTED FROM DUST AND DEBRIS.
- ANY WATER USED DURING CONCRETE AND ASPHALT WORK (INCLUDING SWEEPING AND SAW-CUTTING) MUST BE CONTAINED AND COLLECTED FOR PROPER DISPOSAL. SUGGESTED CONTROLS INCLUDE WET VACUUM, OR ABSORBENTS.
- GOOD HOUSEKEEPING PRACTICES MUST BE EMPLOYED AT THE JOBSITE. MINIMIZE DUST.
- PROJECTS SHALL NOT DISCHARGE TO THE SURFACE WATERS OF THE STATE ANY WASTEWATER GENERATED FROM CUTTING, GRINDING, DRILLING, HYDRO-DEMOLITION OF CONCRETE WITHOUT AUTHORIZATION UNDER A NPDES WASTEWATER DISCHARGE PERMIT.

4. CONCRETE AND GROUT WASHOUT

A. DO NOT DISCHARGE CONCRETE/GROUT WASHOUT INTO STORM DRAINS, CATCH BASINS OR TO THE SANITARY SEWER SYSTEM. PERFORM WASHING OF CONCRETE TRUCKS IN DESIGNATED AREAS OR AN APPROVED OFFSITE LOCATION.
    1. DESIGNATED AREAS SHOULD BE CLEARLY LABELED. THEY SHOULD BE IN A PIT TO PREVENT RUN-OFF OF WASTE WATER. PLACE DESIGNATED AREAS A MINIMUM OF 50 FEET FROM STORM DRAINS, BODIES OF WATER AND DITCHES. ALL DESIGNATED AREAS SHOULD BE LINED TO PREVENT SEEPAGE AND SHOULD HAVE A BARRIER.
    2. ALTERNATIVE TO A DESIGNATED AREA: PROVIDE A CONCRETE BOX. IF ONLY A SMALL OF CONCRETE WASHINGS IS TO OCCUR, ONE OPTION IS TO LINE A ROLL-OFF BOX. FOR VERY SMALL PROJECTS THIS COULD BE DONE WITH A DRUM.
B. ONCE CONCRETE WASHOUT HAS HARDENED, BREAK UP AND DISPOSE OF PROPERLY. DISPOSAL OF HARDENED CONCRETE/GROUT SHOULD OCCUR ON A REGULAR BASIS.
C. WASHOUT FACILITIES MUST BE CLEANED, OR NEW FACILITIES PROVIDED ONCE THE WASHOUT AREA IS 75% FULL.

5. FERTILIZER

USE ONLY PHOSPHORUS-FREE FERTILIZERS ON TURFGRASS. PHOSPHORUS MAY BE ADDED TO TURFGRASS ONLY IF SOILS ARE TESTED (A MINIMUM OF ONCE EVERY FOUR (4) YEARS) AND A NEED FOR PHOSPHORUS IS DEMONSTRATED. PHOSPHORUS FERTILIZERS SHALL BE APPLIED TO LANDS THAT PERMITTEE OWNS OR OPERATES

ONLY AS PRESCRIBED IN THE SOIL TEST RESULTS. PROVIDE EHS EP3 WITH SOIL TESTING RESULTS IF PHOSPHORUS IS PROPOSED FOR USE ON TURFGRASS. SEEDING OR OTHER STABILIZATION SHALL BE REQUIRED IMMEDIATELY TO AREAS WHICH HAVE BEEN DAMAGED BY RUNOFF.

6. DEWATERING

UNCONTAMINATED GROUNDWATER AND SURFACE WATER WHICH IS FREE OF SEDIMENT MAY BE DISCHARGED TO A STORM DRAIN. ALL DEWATERING OPERATIONS MUST USE A FILTER (DEWATERING) BAG CONNECTED TO THE END OF THE DISCHARGE PIPE. THE FINAL DISCHARGE MUST BE CLEAR (NO TURBIDITY) AND ON A CLEAN SURFACE (NOT ON EXPOSED SOILS) TO PREVENT THE DISCHARGE FROM PICKING UP SEDIMENT. THE STORM DRAIN INLET SHALL BE PROTECTED WITH FILTER FABRIC OR FILTER BAG. THE CONTRACTOR SHALL ENSURE ROUTINE INSPECTION AND MAINTENANCE OF THE PUMP HOSES & FILTER BAGS DAILY, REPLACE EQUIPMENT WHEN SIGNS OF DETERIORATION ARE EVIDENT AND/OR IF INSTRUCTED BY THE CONSTRUCTION SITE STORM OPERATOR. IF THERE ARE INDICATIONS OF POSSIBLE CONTAMINATION, OR IF THE WATER IS TURBID, IMMEDIATELY CEASE DISCHARGE AND CONTACT YOUR UNIVERSITY OF MICHIGAN CONSTRUCTION MANAGEMENT REPRESENTATIVE AND U-M OCCUPATIONAL SAFETY & ENVIRONMENTAL HEALTH DEPARTMENT (763-6973) FOR INSPECTION OF THE WATER AND DISPOSAL OPTIONS. POTENTIALLY CONTAMINATED GROUNDWATER MAY EXHIBIT CHEMICAL OR UNUSUAL ODORS, HAVE AN UNUSUAL COLOR, OR SHEEN.

7. CRUSHED CONCRETE

DUE TO THE POTENTIAL FOR LEACHATE FROM CRUSHED CONCRETE TO IMPACT SURFACE WATERS, AVOID WHERE FEASIBLE AND PRACTICAL THE USE OF CRUSHED CONCRETE ON SITE LOCATIONS WHERE THERE IS A POTENTIAL FOR RUNOFF TO ENTER STORM DRAINS AND WATERS OF THE STATE. EHS RECOMMENDS THE PROJECT UTILIZES CLEAN LIMESTONE (NO FINES) WHERE SURFACE WATERS MAY BE IMPACTED BY RUNOFF.

8. ASPHALT SEALANTS

U-M'S STORMWATER PERMIT REQUIRES THAT ALL U-M PROJECTS COMPLY WITH THE FOLLOWING: THE USE OF COAL TAR EMULSIONS TO SEAL ASPHALT SURFACES ***IS PROHIBITED***.

Notes to designer

1. HYDRODYNAMIC SEPARATORS, POROUS PAVEMENT, UNDERGROUND DETENTION SYSTEMS, ETC.

PER U-M'S STORMWATER PERMIT, ALL STRUCTURAL AND VEGETATIVE BEST MANAGEMENT PRACTICES (BMPS) INSTALLED AS A REQUIREMENT UNDER THE STORMWATER PERMIT SHALL INCLUDE A PLAN FOR MAINTAINING MAXIMUM DESIGN PERFORMANCE THROUGH LONG-TERM OPERATION AND MAINTENANCE (O&M). DESIGN/PROJECT MANAGERS ARE TO FORWARD THIS PLAN ONTO EHS FOR REVIEW

2. STORMWATER MANAGEMENT REQUIREMENTS – PROJECTS WITH EARTH DISTURBANCE

SITES DISTURBING 1 ACRE OR GREATER REQUIRE STORMWATER MANAGEMENT UNDER U-M'S STORMWATER PERMIT. THE (04/09) U-M NPDES PERMIT STATES THAT U-M MUST, ADDRESS POST-CONSTRUCTION STORMWATER RUNOFF FROM ALL NEW AND REDEVELOPED PROJECTS THAT DISTURB ONE (1) ACRE OR MORE, INCLUDING PROJECTS LESS THAN ONE (1) ACRE THAT ARE PART OF A LARGER COMMON PLAN OF DEVELOPMENT OR SALE THAT WOULD DISTURB ONE (1) ACRE OR MORE. THE PROGRAM SHALL INCLUDE THE FOLLOWING GENERAL REQUIREMENTS:

- *A MINIMUM TREATMENT VOLUME STANDARD TO ADDRESS WATER QUALITY IMPACTS*
- *CHANNEL PROTECTION CRITERIA TO ADDRESS RESOURCE IMPAIRMENT RESULTING FROM FLOW VOLUMES AND RATES*
- *REFER TO THE EHS GUIDELINE – EP3-001 STORMWATER MANAGEMENT -- POST-CONSTRUCTION REQUIREMENTS FOUND AT THE FOLLOWING LINK FOR THE DETAILED CALCULATION AND DESIGN REQUIREMENTS: HTTP://WWW.EHS.UMICH.EDU/PDF/GUIDELINE/GUIDEPCSW.PDF*

NOTE TO DESIGNER: EHS REQUIRES THAT AN ENGINEERING PACKAGE BE PUT TOGETHER THAT DETAILS ALL OF THE CALCULATIONS AND ASSUMPTIONS REQUIRED TO MEET THE NPDES PERMIT REQUIREMENTS. PLEASE CLEARLY DOCUMENT WHAT BMP'S ARE REQUIRED BY THE PERMIT, AND WHAT IS BEING ELECTIVELY INSTALLED. THIS PACKAGE MUST BE REVIEWED AND APPROVED BY EHS. ONCE APPROVED, IT WILL NEED TO BE SIGNED AND PE STAMPED BY THE DESIGN ENGINEER PLEASE NOTE THE PACKAGE MUST ALSO CONTAIN O&M PROCEDURES AND SCHEDULE, DETAILS ON INSTALLED SYSTEMS, AND LOCATIONS OF THE STORMWATER CONTROLS SO WE CAN TRACK. PLEASE CONTACT JOHN KOSCO IN THE EHS DEPARTMENT WITH ANY QUESTIONS PERTAINING TO THE POST CONSTRUCTION STORMWATER MANAGEMENT REQUIREMENTS (734-615-6153 OR JKOSCO@UMICH.EDU).

IN ADDITION, ONCE THE PROJECT IS COMPLETE, A SECOND SIGNED AND STAMPED MEMO IS REQUIRED INDICATING THAT THE STORMWATER CONTROLS WERE INSTALLED AS DETAILED IN THE EHS APPROVED STORMWATER POST CONSTRUCTION ENGINEERING PACKAGE.

PLEASE NOTE THAT FOR THE U-M PERMIT, WE MUST RETAIN (INFILTRATE) THE NEW RUNOFF THAT A PROJECT MAY GENERATE. IN ORDER TO HELP DESIGN THE SYSTEM, INFILTRATION TESTING MUST BE PERFORMED IN AREAS WHERE THE PROJECT IS PROPOSING TO MITIGATE THE NEW RUNOFF. THE INFILTRATION TESTING MUST BE PERFORMED BY A FIRM WITH ADEQUATE EXPERIENCE IN THIS FIELD. ALSO, THE TESTING MUST BE PERFORMED AT THE PROPOSED BOTTOM ELEVATION OF THE PROPOSED INFILTRATION AREA, TO ENSURE THAT IT WILL WORK. THIS TESTING WILL HELP GUIDE THE DESIGN OF THE FOOTPRINT OF THE STORMWATER MANAGEMENT PRACTICE REQUIRED TO ENSURE INFILTRATION OF THE RETAINED VOLUME OCCURS WITHIN THE REQUIRED TIME FRAME (24-48HRS).

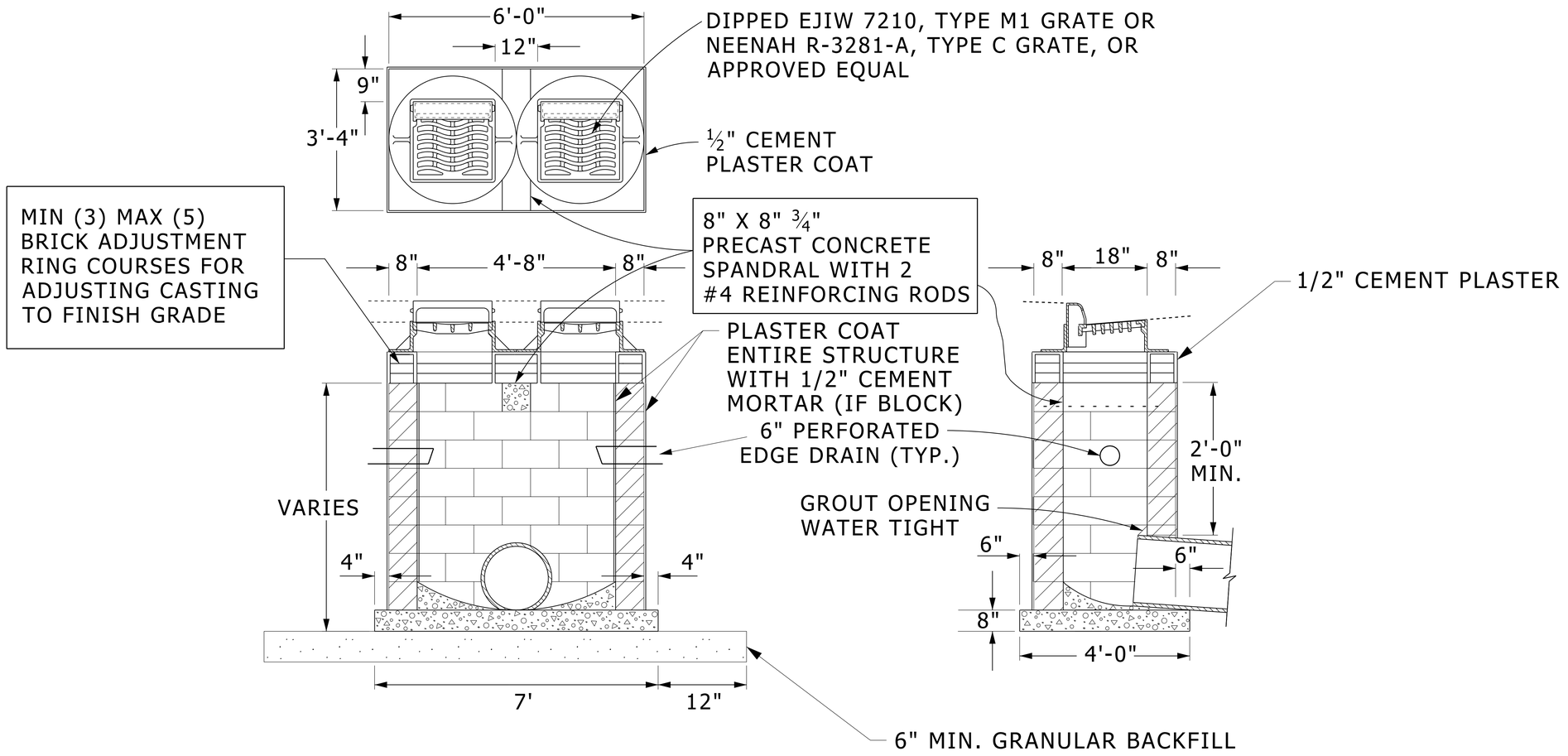

NOTES:
ALL STRUCTURES TO BACKFILLED WITH CLASS II FILL OR 21AA LIMESTONE COMPACTED TO 98% MAXIMUM DENSITY.

CASTING TO BE COATED (TYPICAL TO ALL)

DOUBLE STORM CATCH BASIN

NO SCALE

SD-STM-CB_DOUBLE

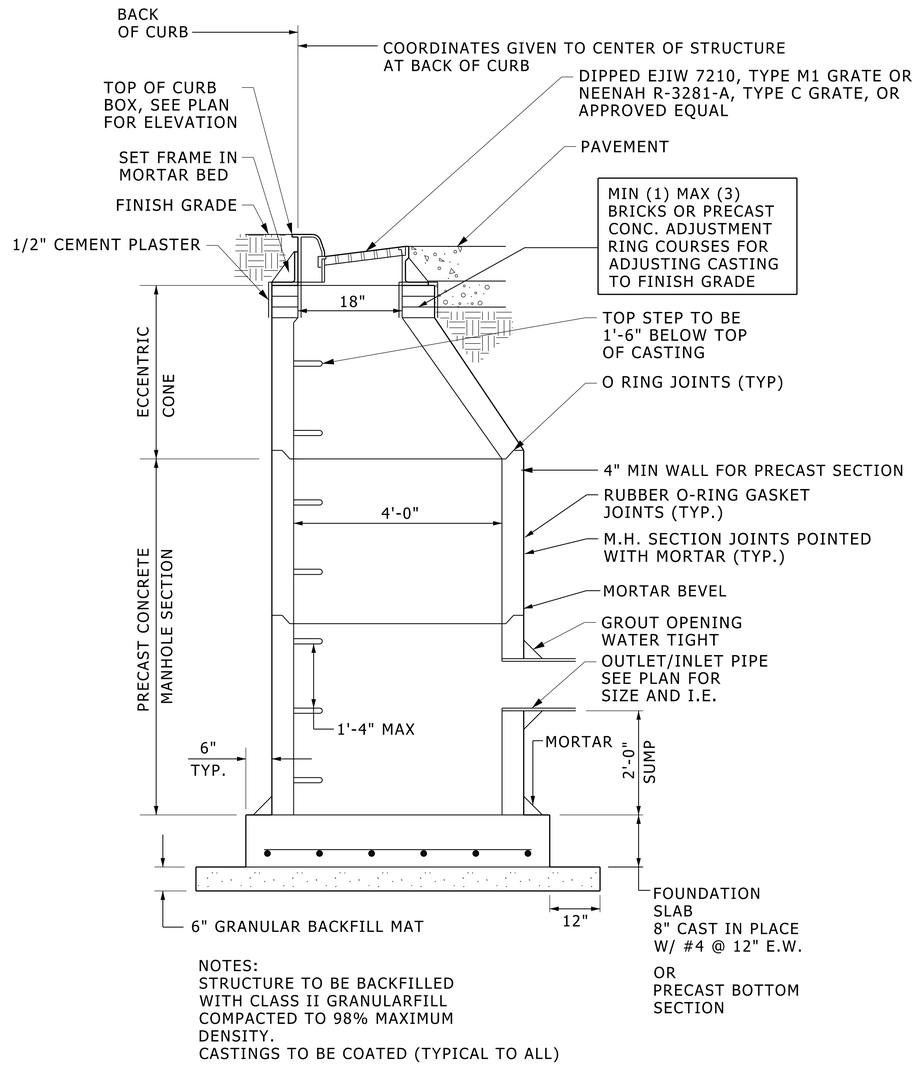

NOTES:
STRUCTURE TO BE BACKFILLED WITH CLASS II GRANULARFILL COMPACTED TO 98% MAXIMUM DENSITY.
CASTINGS TO BE COATED (TYPICAL TO ALL)

4' DIAMETER PRECAST CATCH BASIN

NO SCALE

NOTE TO DESIGNER: CHANGE DIMENSION OF CASTING TO 24" WHEN REQUIRED

SD-STM-CB_PRECAST

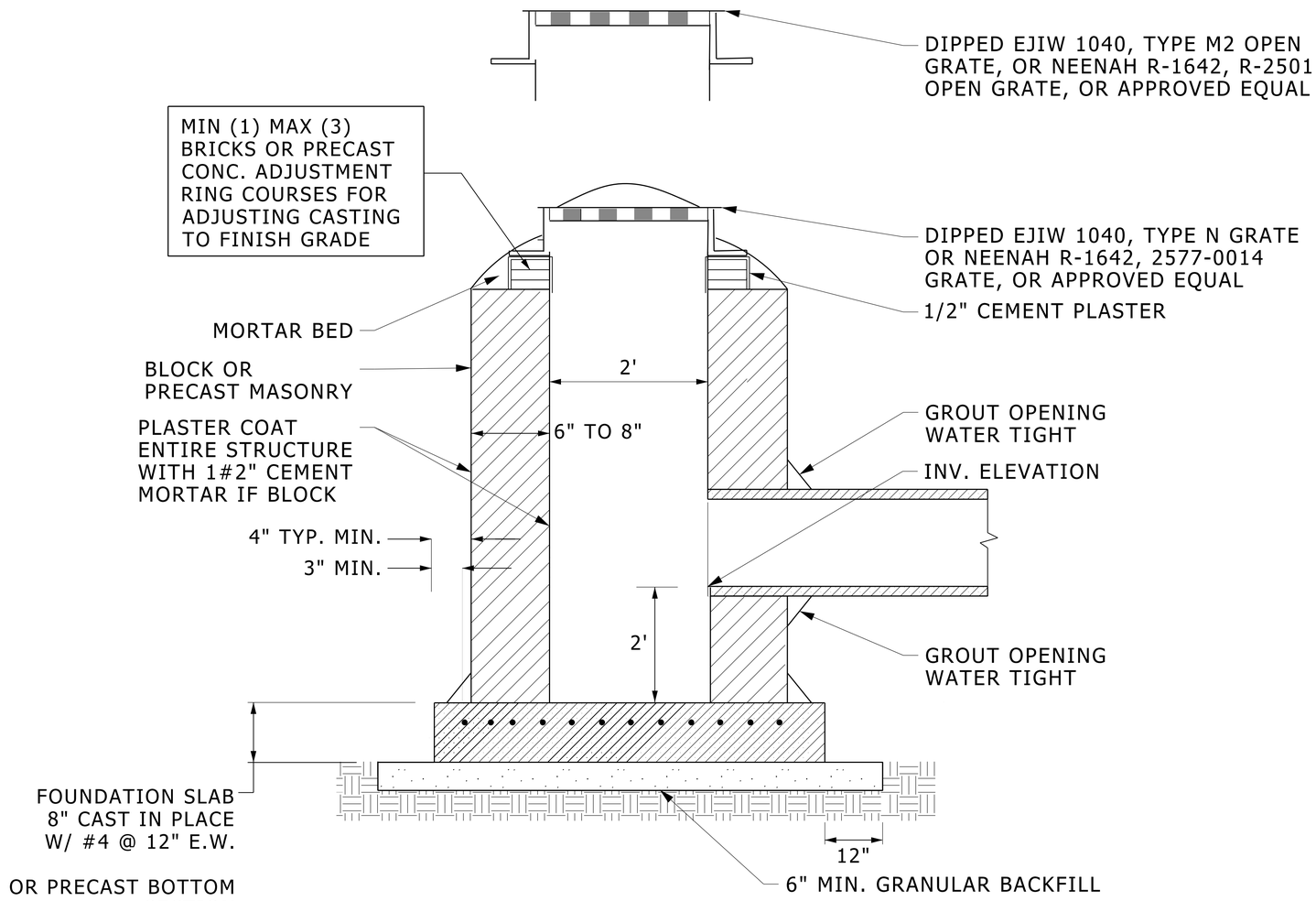

NOTES:
ALL STRUCTURES TO BACKFILLED WITH CLASS II FILL OR 21AA LIMESTONE COMPACTED TO 98% MAXIMUM DENSITY.

CASTING TO BE COATED (TYPICAL TO ALL)

2' DIAMETER STORM INLET

NO SCALE

SD-STM-INTLET

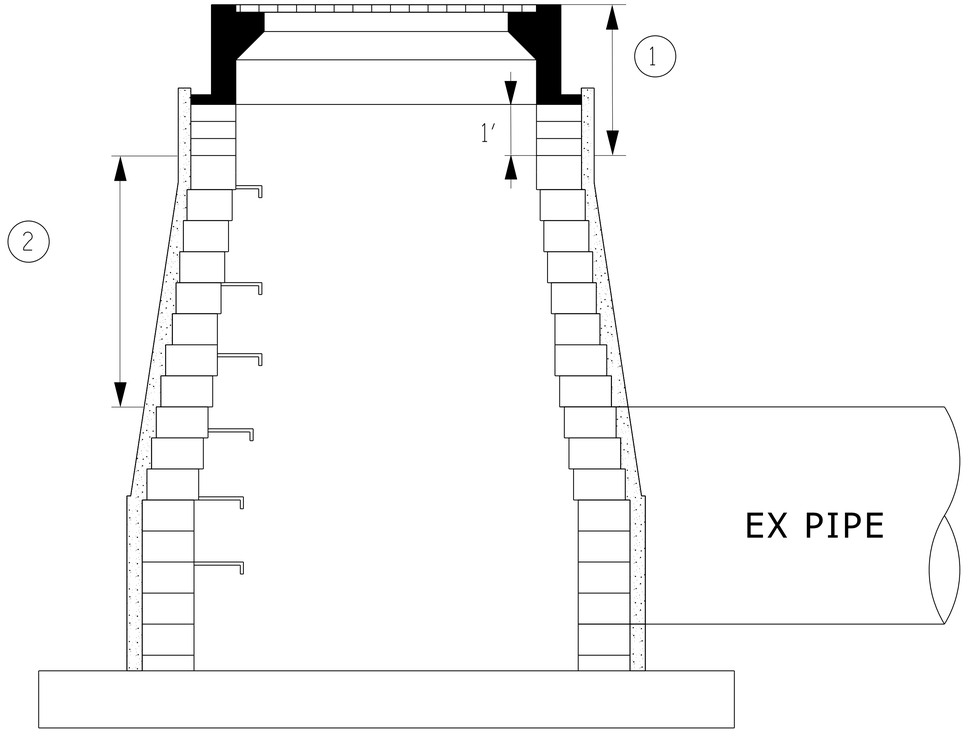

MANHOLE COVER ADJUSTMENT AND STRUCTURE REBUILD

NO SCALE

1. STRUCTURE COVER, ADJ:
   REMOVE FRAME AND GRATE. REMOVE AND REPLACE TOP ONE FOOT OF STRUCTURE ADJUSTING RINGS AND MORTAR BED AS REQUIRED TO ACHIEVE PROPOSED GRADE. PAID PER EACH AS STRUCTURE COVER, ADJ.

2. STRUCTURE, REBUILD:
   WHEN DIRECTED BY THE ENGINEER, REMOVE AND REPLACE TOP PORTION OF DRAINAGE STRUCTURE TO THE LIMITS DIRECTED BY THE ENGINEER. EXISTING MASONRY OR BLOCK MAY BE REUSED IF IN GOOD CONDITION. PAID BY THE VERTICAL FOOT OF STRUCTURE DEPTH AS STRUCTURE, REBUILD.

SD-STM-MH_ADJ

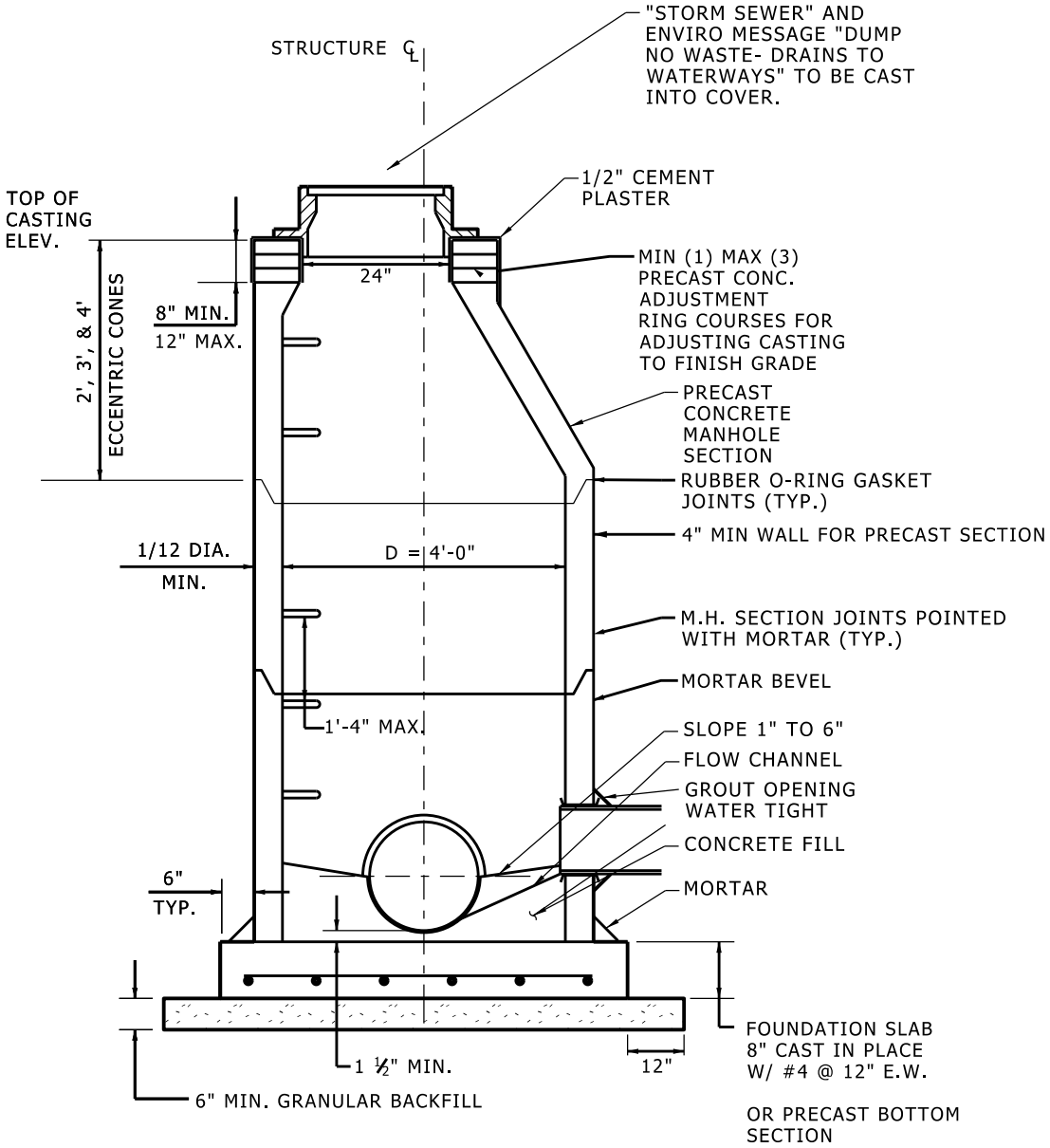

4' DIAMETER PRECAST STORM MANHOLE

NO SCALE

NOTES:

ALL STRUCTURES TO BACKFILLED WITH CLASS II FILL OR 21AA LIMESTONE COMPACTED TO 98% MAXIMUM DENSITY.

FRAME
1. NEENAH NF-16422310 HS-25 LOADING
2. EAST JORDAN COMPANY, EJCO HEAVY DUTY FRAME FOR 1040 COVER, MINIMUM HS20 LOADING

SOLID COVER
1. NEENAH, R-1642T474, NO VENT HOLES, ENVIRO NOTICE
2. EAST JORDAN COMPANY, EJCO 1040, TYPE A1, ENVIRO NOTICE

ADA COMPLIANT GRATE
1. NEENAH NF-23703010, TYPE "Q" GRATE, ENVIRO NOTICE
2. EAST JORDAN COMPANY, EJCO 1040 TYPE M3, ENVIRO NOTICE

GRATE, NON ADA COMPLIATE (NOT TO BE USED IN WALKWAYS, AND ONLY WHERE BEEHIVE NOT APPROPRIATE)
1. NEENAH, NF-23703005 TYPE "Q" GRATE, ENVIRO NOTICE
2. EAST JORDAN COMPANY, EJCO 1040, TYPE M2, ENVIRO NOTICE

BEEHIVE
1. NEENAH, NF25610011 BEEHIVE GRATE, ENVIRO NOTICE
2. EAST JORDAN COMPANY, EJCO 1040, TYPE 02, ENVIRO NOTICE

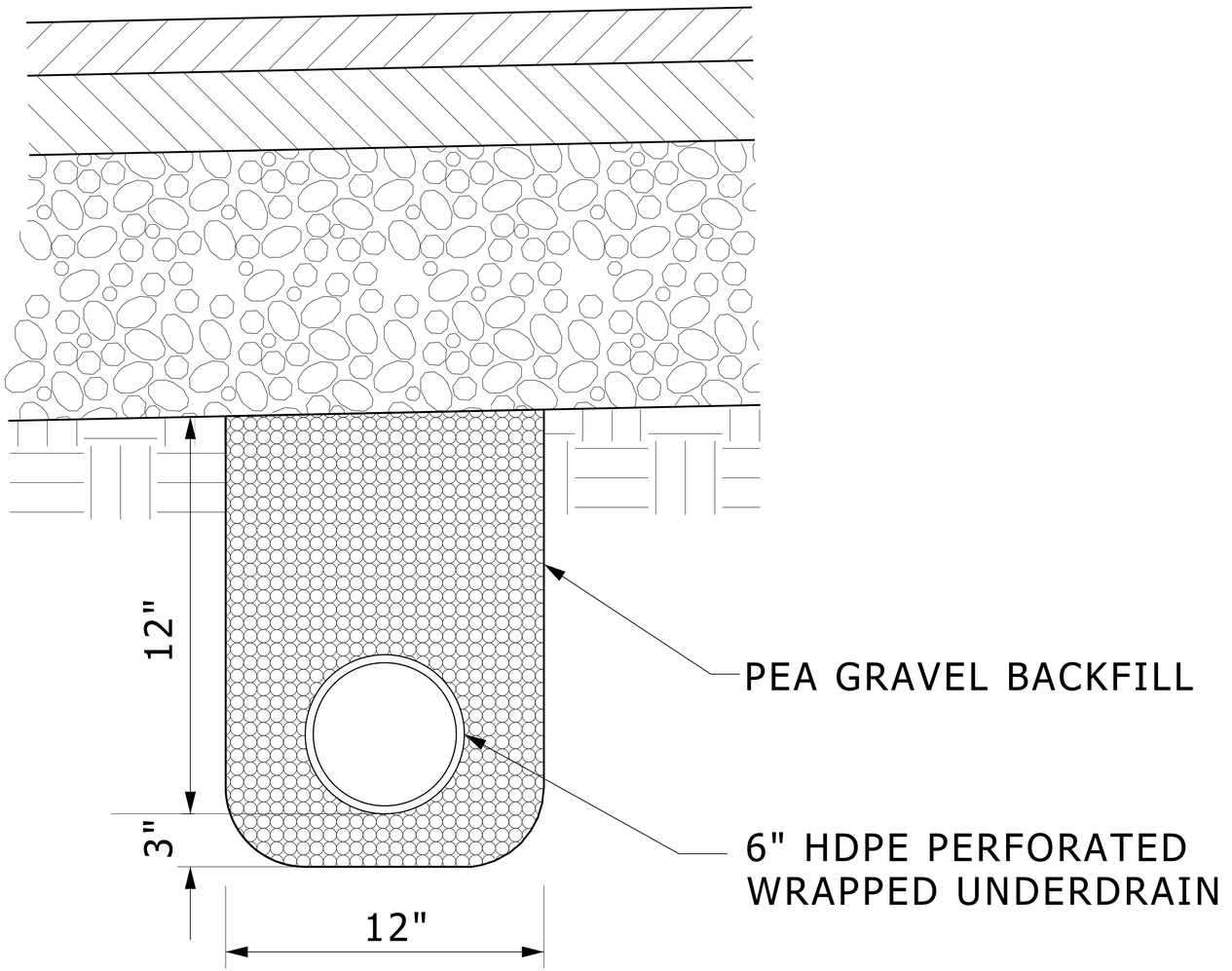

UNDERDRAIN

NO SCALE

SD-STM-UNDERDRAIN

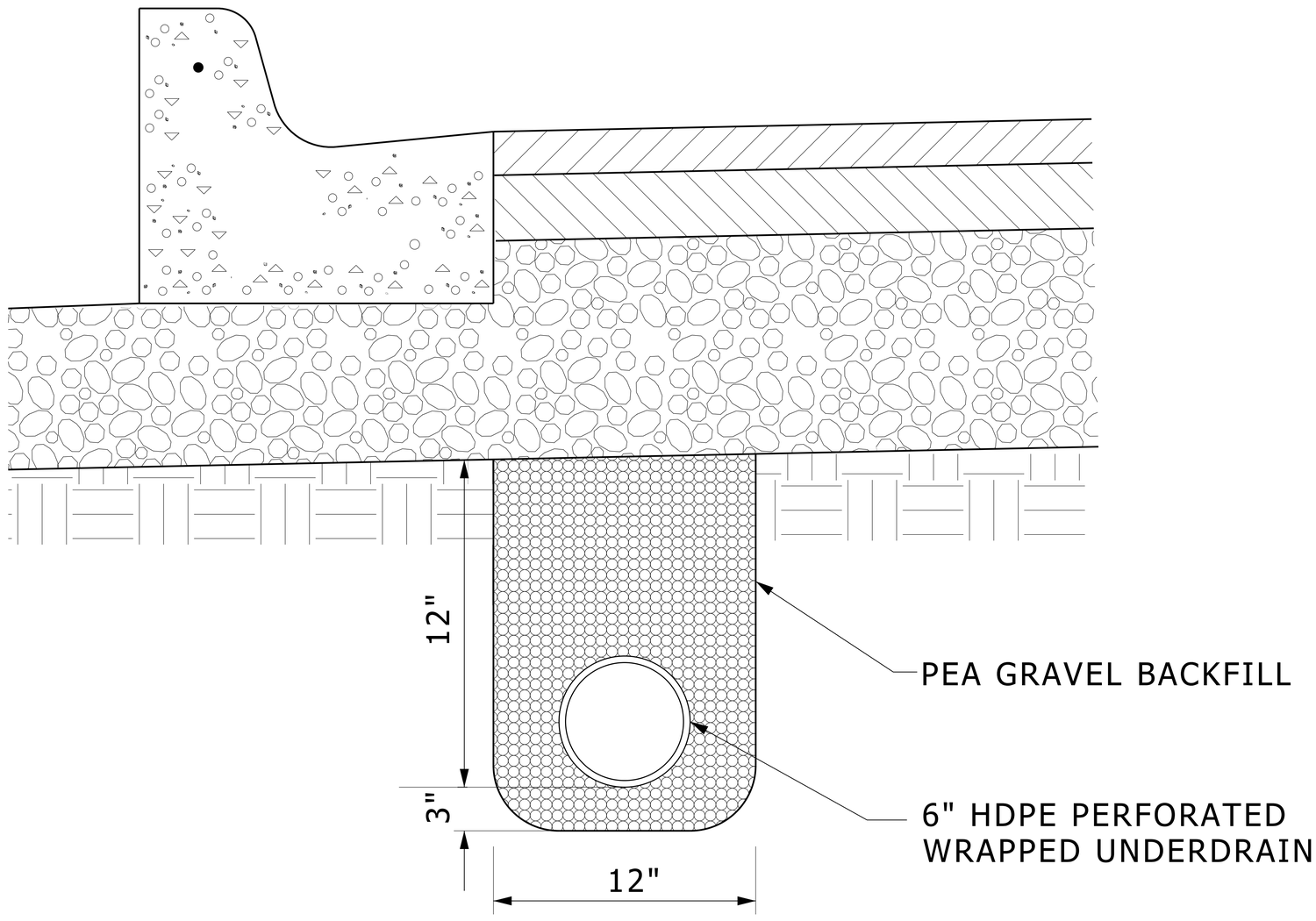

UNDERDRAIN WITH CURB & GUTTER

NO SCALE

SD-STM-UNDERDRAIN_C&G

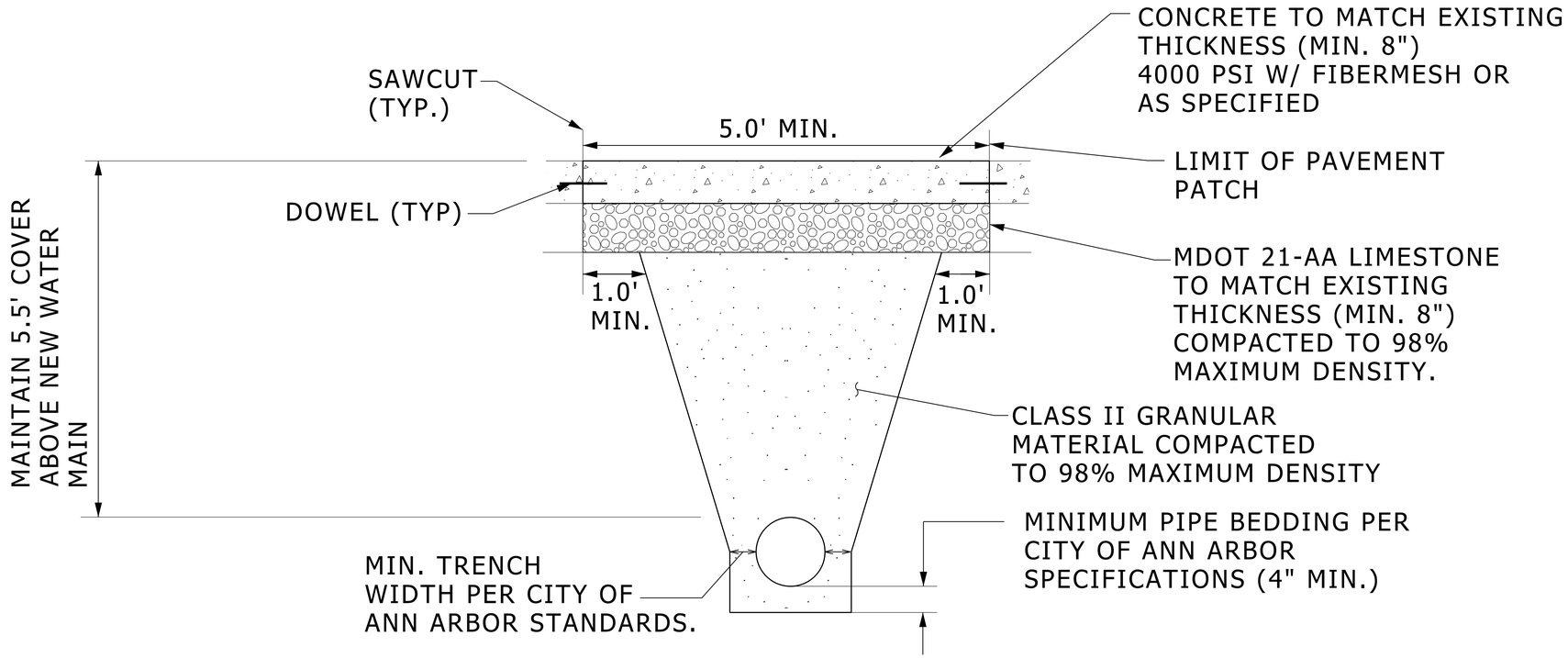

NOTES:
1) TRENCH DETAILS SHOW TYPE OF BACKFILL AND SURFACE RESTORATION ONLY.
2) ALL TRENCHING TO CONFORM TO ALL APPLICABLE M.I.O.S.H.A. STANDARDS.
3) DENSITY TESTING PER UNIVERSITY OF MICHIGAN SPECIFICATIONS.
4) REMOVE & REPLACE HALF OR FULL CONCRETE PAVEMENT PANELS.

UTILITY TRENCH WITH CONCRETE PATCH

NO SCALE

SD-TERNCH-CONC

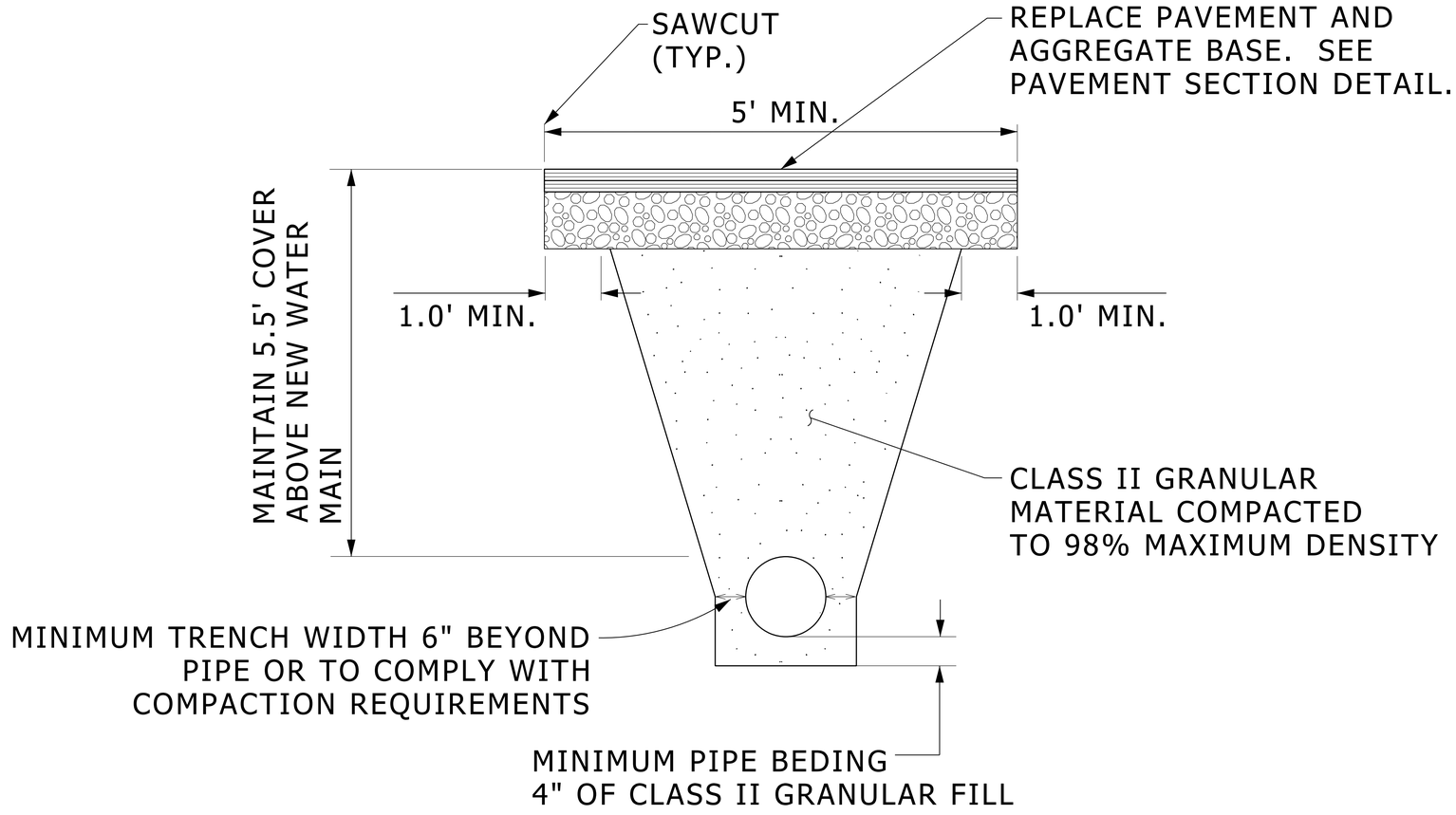

NOTE:
1) TRENCH DETAILS SHOW TYPE OF BACKFILL AND SURFACE RESTORATION ONLY.
2) TRENCHING TO CONFORM TO ALL APPLICABLE M.I.O.S.H.A. STANDARDS.
3) DENSITY TESTING PER UNIVERSITY OF MICHIGAN SPECIFICATIONS.

UTILITY TRENCH WITH ASPHALT PATCH

NO SCALE

SD-TRENCH-ASP

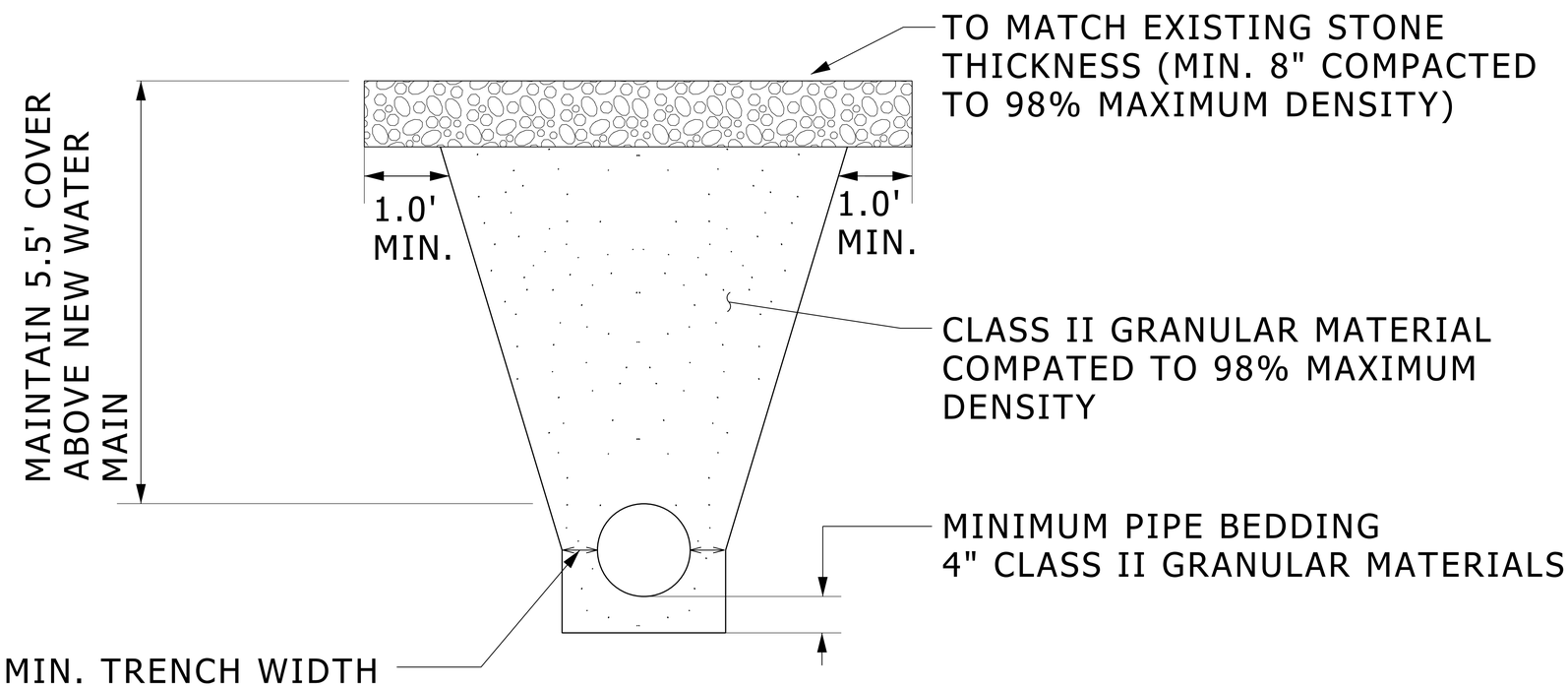

NOTES:
1) TRENCH DETAILS SHOW TYPE OF BACKFILL AND SURFACE RESTORATION ONLY.
2) ALL TRENCHING TO CONFORM TO ALL APPLICABLE M.I.O.S.H.A. STANDARDS.
3) DENSITY TESTING PER UNIVERSITY OF MICHIGAN SPECIFICATIONS.

UTILITY TRENCH WITH GRAVEL PATCH

NO SCALE

SD-TRENCH-GRAVEL

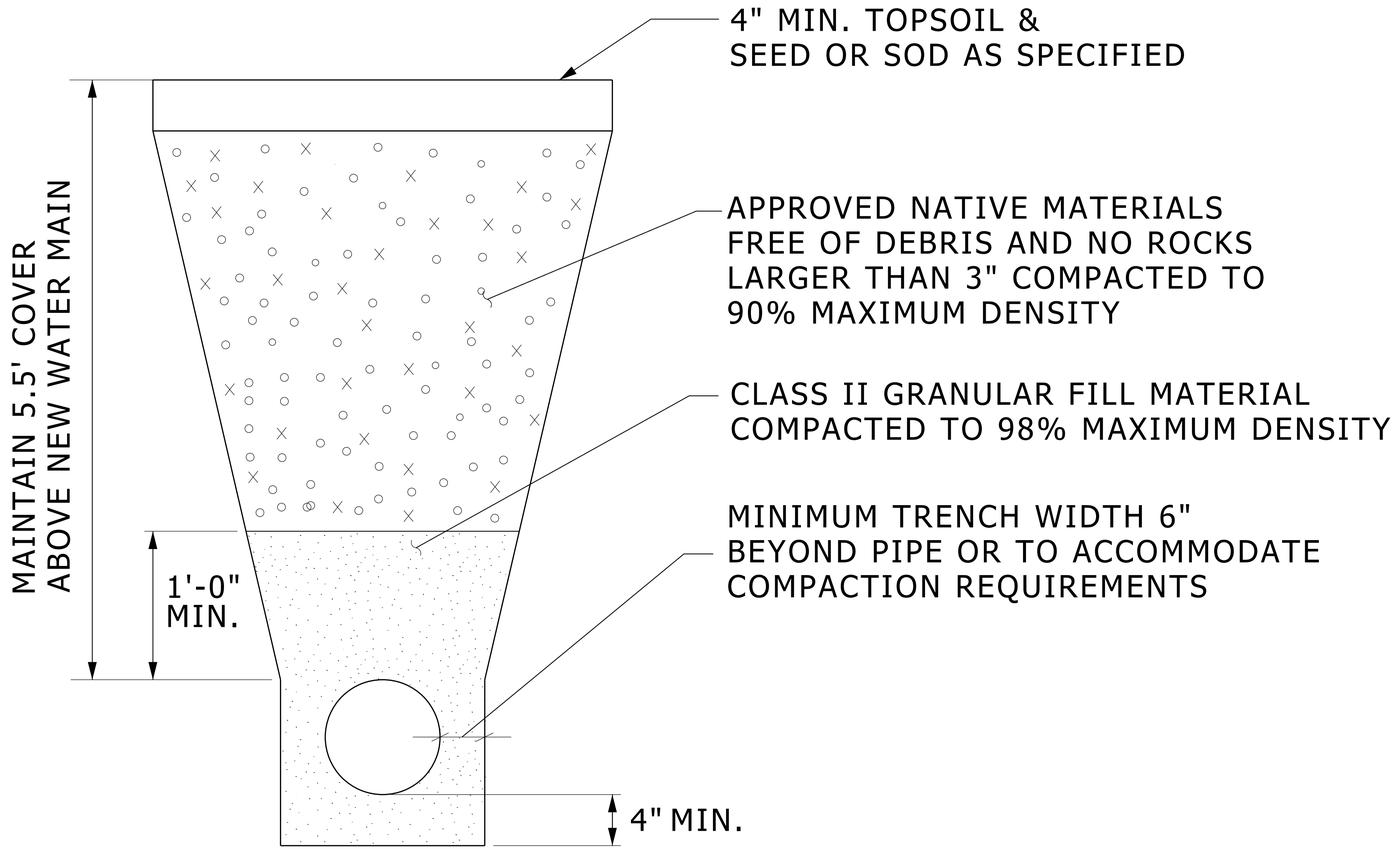

NOTE:
1) TRENCH DETAILS SHOW TYPE OF BACKFILL AND SURFACE RESTORATION ONLY.
2) TRENCHING TO CONFORM TO ALL APPLICABLE M.I.O.S.H.A. STANDARDS.
3) DENSITY TESTING PER UNIVERSITY OF MICHIGAN SPECIFICATIONS.

UTILITY TRENCH IN GREEN BELT

NO SCALE

SD-TRENCH-GREEN

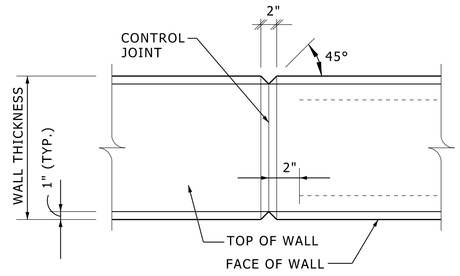

CONTROL JOINT (C.J.) PLAN VIEW

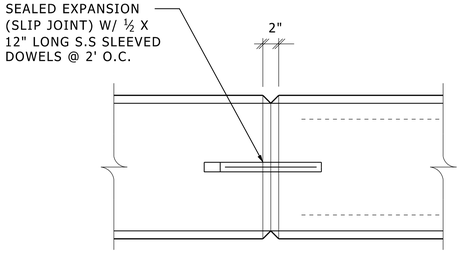

EXPANSION JOINT (E.J.) PLAN VIEW

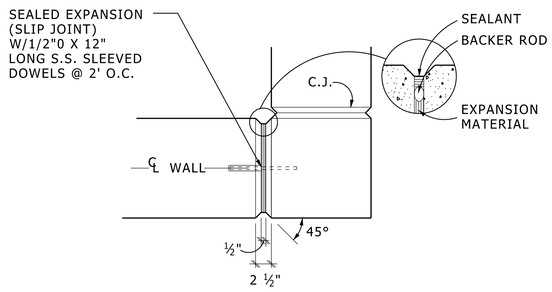

TYPICAL WALL JOINTING & CORNERS

NO SCALE

SD-WALL-JNT

NOTE TO DESIGNERS:

WALL JOINTING LOCATIONS ARE TO BE CALLED OUT IN WALL PROFILES.

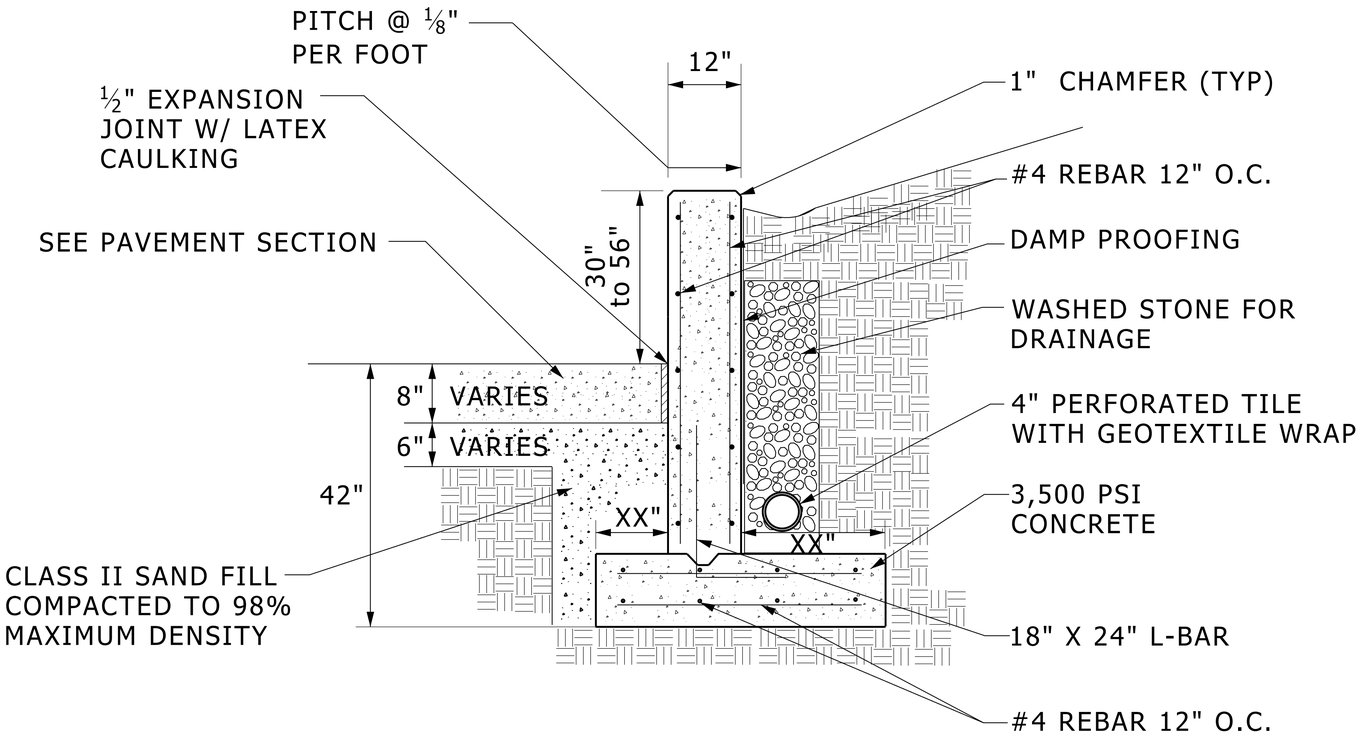

TYPICAL 30" TO 56" RETAINING WALL

NO SCALE

SD-WALL-RETAIN

NOTE TO DESIGNER:

1.WALL AND FOUNDATION AND REINFORCING STEEL SHALL BE ENGINEERED BY DESIGNER FOR ACTUAL SITE CONDITIONS
2.WALL CONTROL AND EXPANSION JOINTING TO BE CALLED OUT IN WALL PROFILES

NOTES: LIGHT SANDBLAST FIN. ON EXPOSED SURFACES
SEE LAYOUT PLANS FOR E.J. & C.J. LOCATIONS

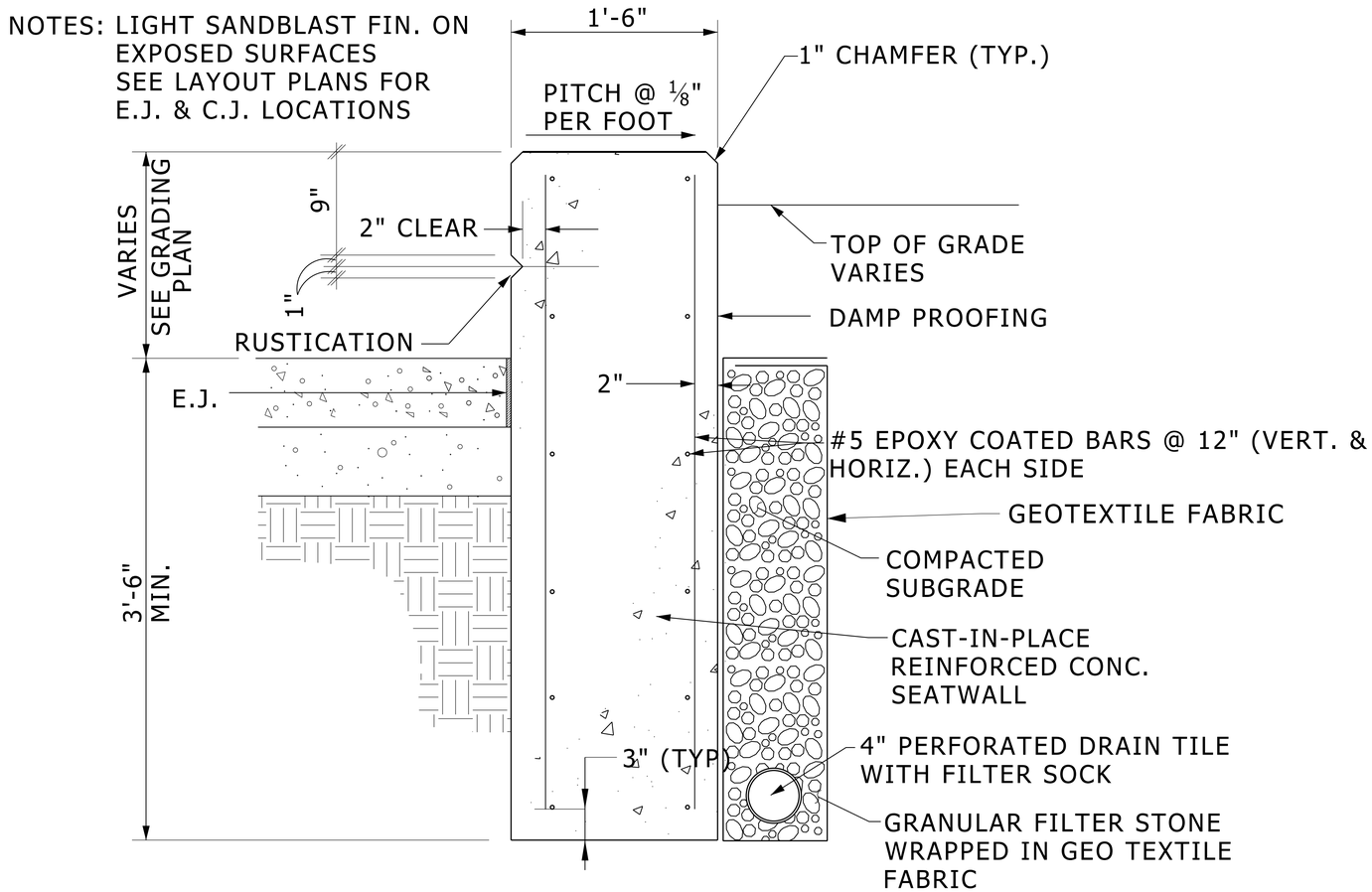

TYPICAL CONCRETE SEATWALL

NO SCALE

SD-WALL-SEAT

NOTE TO DESIGNER:

1.WALL AND FOUNDATION SHALL BE ENGINEERED FOR ACTUAL SITE CONDITIONS
2.WALL CONTROL JOINTS AND EXPANSION JOINTING TO BE CALLED OUT IN WALL PROFILES